4–7–99
Vol. 64 No. 66
Pages 16797–17078

federal register

Wednesday
April 7, 1999

Briefings on how to use the Federal Register
For information on briefings in Washington, DC, see announcement on the inside cover of this issue.

The **FEDERAL REGISTER** is published daily, Monday through Friday, except official holidays, by the Office of the Federal Register, National Archives and Records Administration, Washington, DC 20408, under the Federal Register Act (44 U.S.C. Ch. 15) and the regulations of the Administrative Committee of the Federal Register (1 CFR Ch. I). The Superintendent of Documents, U.S. Government Printing Office, Washington, DC 20402 is the exclusive distributor of the official edition.

The **Federal Register** provides a uniform system for making available to the public regulations and legal notices issued by Federal agencies. These include Presidential proclamations and Executive Orders, Federal agency documents having general applicability and legal effect, documents required to be published by act of Congress, and other Federal agency documents of public interest.

Documents are on file for public inspection in the Office of the Federal Register the day before they are published, unless the issuing agency requests earlier filing. For a list of documents currently on file for public inspection, see http://www.nara.gov/fedreg.

The seal of the National Archives and Records Administration authenticates the Federal Register as the official serial publication established under the Federal Register Act. Under 44 U.S.C. 1507, the contents of the **Federal Register** shall be judicially noticed.

The **Federal Register** is published in paper and on 24x microfiche. It is also available online at no charge as one of the databases on GPO Access, a service of the U.S. Government Printing Office.

The online edition of the **Federal Register** is issued under the authority of the Administrative Committee of the Federal Register as the official legal equivalent of the paper and microfiche editions (44 U.S.C. 4101 and 1 CFR 5.10). It is updated by 6 a.m. each day the **Federal Register** is published and it includes both text and graphics from Volume 59, Number 1 (January 2, 1994) forward.

GPO Access users can choose to retrieve online **Federal Register** documents as TEXT (ASCII text, graphics omitted), PDF (Adobe Portable Document Format, including full text and all graphics), or SUMMARY (abbreviated text) files. Users should carefully check retrieved material to ensure that documents were properly downloaded.

On the World Wide Web, connect to the **Federal Register** at http://www.access.gpo.gov/nara. Those without World Wide Web access can also connect with a local WAIS client, by Telnet to swais.access.gpo.gov, or by dialing (202) 512-1661 with a computer and modem. When using Telnet or modem, type swais, then log in as guest with no password.

For more information about GPO Access, contact the GPO Access User Support Team by E-mail at gpoaccess@gpo.gov; by fax at (202) 512–1262; or call (202) 512–1530 or 1–888–293–6498 (toll free) between 7 a.m. and 5 p.m. Eastern time, Monday–Friday, except Federal holidays.

The annual subscription price for the **Federal Register** paper edition is $555, or $607 for a combined **Federal Register,** Federal Register Index and List of CFR Sections Affected (LSA) subscription; the microfiche edition of the **Federal Register** including the Federal Register Index and LSA is $220. Six month subscriptions are available for one-half the annual rate. The charge for individual copies in paper form is $8.00 for each issue, or $8.00 for each group of pages as actually bound; or $1.50 for each issue in microfiche form. All prices include regular domestic postage and handling. International customers please add 25% for foreign handling. Remit check or money order, made payable to the Superintendent of Documents, or charge to your GPO Deposit Account, VISA, MasterCard or Discover. Mail to: New Orders, Superintendent of Documents, P.O. Box 371954, Pittsburgh, PA 15250–7954.

There are no restrictions on the republication of material appearing in the **Federal Register.**

How To Cite This Publication: Use the volume number and the page number. Example: 64 FR 12345.

SUBSCRIPTIONS AND COPIES

PUBLIC	
Subscriptions:	
Paper or fiche	**202–512–1800**
Assistance with public subscriptions	**512–1806**
General online information	**202–512–1530; 1–888–293–6498**
Single copies/back copies:	
Paper or fiche	**512–1800**
Assistance with public single copies	**512–1803**
FEDERAL AGENCIES	
Subscriptions:	
Paper or fiche	**523–5243**
Assistance with Federal agency subscriptions	**523–5243**

FEDERAL REGISTER WORKSHOP

THE FEDERAL REGISTER: WHAT IT IS AND HOW TO USE IT

FOR: Any person who uses the Federal Register and Code of Federal Regulations.

WHO: Sponsored by the Office of the Federal Register.

WHAT: Free public briefings (approximately 3 hours) to present:

1. The regulatory process, with a focus on the Federal Register system and the public's role in the development regulations.
2. The relationship between the Federal Register and Code of Federal Regulations.
3. The important elements of typical Federal Register documents.
4. An introduction to the finding aids of the FR/CFR system.

WHY: To provide the public with access to information necessary to research Federal agency regulations which directly affect them. There will be no discussion of specific agency regulations.

WASHINGTON, DC

WHEN: April 20, 1999 at 9:00 am.

WHERE: Office of the Federal Register
Conference Room
800 North Capitol Street, NW.
Washington, DC
(3 blocks north of Union Station Metro)

RESERVATIONS: 202–523–4538

Printed on recycled paper.

Contents

Federal Register

Vol. 64, No. 66

Wednesday, April 7, 1999

Agriculture Department
NOTICES
Agency information collection activities:
Submission for OMB review; comment request, 16897–16898

Air Force Department
NOTICES
Meetings:
Scientific Advisory Board, 16946
Patent licenses; non-exclusive, exclusive, or partially exclusive:
Air Force Research Laboratory, Kirkland AFB, NM, 16946–16947

Antitrust Division
NOTICES
Meetings:
International Competition Policy Advisory Committee, 16999

Army Department
NOTICES
Privacy Act:
System of records, 16947–16948

Centers for Disease Control and Prevention
NOTICES
Committees; establishment, renewal, termination, etc.:
Interagency Committee on Smoking and Health, 16974
Grants and cooperative agreements; availability, etc.:
Pathogenesis of measles infections; development of vaccines, 16974–16976

Coast Guard
RULES
Regattas and marine parades:
Christiansted Harbor, St. Croix, swimming event, 16812–16813
City of Fort Lauderdale Annual Air and Sea Show, 16813–16814
NOTICES
Water pollution control:
Clean Water Act; class II administrative penalty assessments—
Ashland, Inc., 17053–17054
Water polution control:
Clean Water Act; class II administrative penalty assessments—
TransAmerican Refining Corp., 17054–17055

Commerce Department
See Export Administration Bureau
See International Trade Administration
See National Oceanic and Atmospheric Administration
NOTICES
Agency information collection activities:
Submission for OMB review; comment request, 16898
Voting age population; 1998 census count, 16898–16899

Customs Service
PROPOSED RULES
Customs bonded wharehouses:
Inventory reports filing, 16868–16870

Defense Department
See Air Force Department
See Army Department
NOTICES
Arms sales notification; transmittal letter, etc., 16938–16945
Grants and cooperative agreements; availability, etc.:
Ecology and oceanography of harmful algal blooms project, 16930–16937

Employment and Training Administration
NOTICES
Adjustment assistance:
Great Northern Paper, 17015–17016
Louisiana Pacific, et al., 17016–17017
Ralston Purina, 17017
Timken Co., et al., 17017–17019
Twinstar Semiconductor, 17019

Energy Department
See Federal Energy Regulatory Commission
NOTICES
Environmental statements; availability, etc.:
Idaho National Engineering and Environmental Laboratory, ID; record of decision, 16948–16952

Environmental Protection Agency
RULES
Pesticides; tolerances in food, animal feeds, and raw agricultural commodities:
Avermectin, 16843–16850
Propamocarb hydrochloride, 16840–16843
Tebufenozide, 16850–16856
Trichloderma hazianum KRL-AG2(ATCC No. 20847) etc., 16856–16860
PROPOSED RULES
Pesticides; tolerances in food, animal feeds, and raw agricultural commodities:
Dalapon, etc., 16874–16880
NOTICES
Agency information collection activities:
Proposed collection; comment request, 16960–16961
Submission for OMB review; comment request, 16961–16962
Grants and cooperative agreements; availability, etc.:
Ecology and oceanography of harmful algal blooms project, 16930–16937
Pesticide programs:
Food Quality Protection Act—
Choosing a Percentile of Acute Dietary Exposure as a Threshold of Regulatory Concern; policy issues; comment request, 16962–16965
Pesticide registration, cancellation, etc.:
AgrEvo USA Co., 16965–16967
Pesticides; experimental use permits, etc.:
Fleming Laboratories, Inc., 16967

Reports and guidance documents; availability, etc.:
Data for refining anticipated residue estimates used in dietary risk assessment for organophosphate pesticides, 16967–16970

Executive Office of the President
See National Drug Control Policy Office
See Presidential Documents
See Trade Representative, Office of United States

Export Administration Bureau
NOTICES
Export privileges, actions affecting:
Yasutomi, Kiyoyuki, 16899

Federal Aviation Administration
RULES
Airworthiness directives:
Bell, 16801–16803
Boeing, 16810–16812
Bombardier, 16803–16805
Eurocopter France, 16808–16810
McDonald Douglas, 16805–16808
NOTICES
Agency information collection activities:
Proposed collection; comment request, 17055–17056
Passenger facility charges; applications, etc.:
MBS International Airport, MI, 17056

Federal Communications Commission
PROPOSED RULES
Common carrier services:
Satellite communications—
2 GHz band; policies and services rules establishment, 16880–16882
NOTICES
Committees; establishment, renewal, termination, etc.:
Technological Advisory Council, 16970
Meetings:
Technological Advisory Council, 16970–16971

Federal Energy Regulatory Commission
NOTICES
Electric rate and corporate regulation filings:
Pacific Gas & Electric Co., et al., 16955–16957
Environmental statements; availability, etc.:
ANR Pipeline Co., 16957–16958
Bonners Ferry, ID, 16958
Hydroelectric applications, 16959
Meetings:
Puget Sound Energy, Inc.; hydroelectric settlement, 16960
Applications, hearings, determinations, etc.:
AES Eastern Energy, L.P., et al., 16952–16953
American Electric Power Co. et al., 16953
Columbia Gas Transmission Corp., 16953
Koch Gateway Pipeline Co., 16953
Mississippi River Transmission Corp., 16953–16954
Montana Power Co., 16954
Northern Natural Gas Co., 16954
Northwest Pipeline Corp., 16954–16955

Federal Highway Administration
PROPOSED RULES
Right-of-way and environment:
Mitigation of impacts to wetlands, 16870–16874

Federal Reserve System
NOTICES
Banks and bank holding companies:
Change in bank control, 16971
Formations, acquisitions, and mergers, 16971
Meetings; Sunshine Act, 16971

Federal Transit Administration
PROPOSED RULES
Major capital investment projects, 17061–17071

Fish and Wildlife Service
PROPOSED RULES
Endangered and threatened species:
Rhadine exilis, etc. (nine invertebrate species from Bexar County, TX), 16890–16891
Rio Grande Silvery Minnow, 16890
NOTICES
Environmental statements; availability, etc.:
Incidental take permits—
Florida scrub jay, et al., 16993–16994

Food and Drug Administration
NOTICES
Meetings:
Cardiovascular and Renal Drugs Advisory Committee, 16976
Drug Abuse Advisory Committee, 16976–16977
Peeripheral and Central Nervous System Drugs Advisory Committee, 16977

General Services Administration
NOTICES
Environmental statements; availability, etc.:
GSA Federal laboratories, Prince George's County, MD, 16972
Grants and cooperative agreements; availability, etc.:
Small business competitivenesss demonstration program, 16972–16973

Health and Human Services Department
See Centers for Disease Control and Prevention
See Food and Drug Administration
See Health Resources and Services Administration
NOTICES
Meetings:
President's Council on Physical Fitness and Sports, 16973–16974

Health Resources and Services Administration
NOTICES
Organization, functions, and authority delegations:
Maternal and Child Health Bureau, 16977–16980

Interior Department
See Fish and Wildlife Service
See Land Management Bureau
See National Park Service
See Surface Mining Reclamation and Enforcement Office
NOTICES
Privacy Act:
Systems of records, 16981–16992

Internal Revenue Service
NOTICES
Agency information collection activities:
Proposed collection; comment request, 17057–17060

International Trade Administration
NOTICES
Antidumping:
Barbed wire and barbless wire from—
Argentina, 16899–16901
Frozen concentrated orange juice from—
Brazil, 16901–16904
Potassium permanganate from—
China, 16907–16910
Spain, 16904–16906
Sebacic acid from—
China, 16910–16913
Committees; establishment, renewal, termination, etc.:
Asian Pacific Economic Cooperation Electronic Steering Group, 16913–16914
Countervailing duties:
Hot-rolled lead and bismuth carbon steel products from—
Germany, 16915–16920
United Kingdom, 16920–16924
Welded carbon steel pipes and tubes and welded carbon steel line pipe from—
Turkey, 16924–16929
Export trade certificates of review, 16929–16930
Applications, hearings, determinations, etc.:
University of—
Louisiana State University, 16913
Michigan, 16913

International Trade Commission
NOTICES
Import investigations:
Chloropicrin from—
China, 16998
Creatine monohydrate from—
China, 16998–16999
Extruded rubber thread from—
Indonesia, 16999

Justice Department
See Antitrust Division
See Justice Programs Office
See National Institute of Corrections
See Prisons Bureau

Justice Programs Office
NOTICES
Reports and guidance documents; availability, etc.:
Prison Industry enhancement certifications program; guideline, 17000–17014

Labor Department
See Employment and Training Administration
NOTICES
Women's Bureau:
National women veterans art design search, 17015

Land Management Bureau
NOTICES
Agency information collection activities:
Proposed collection; comment request, 16994–16995
Meetings:
Resource advisory councils—
Northeastern Great Basin, 16995–16996
Realty actions; sales, leases, etc.:
New Mexico, 16996
New Mexico; correction, 16996

National Aeronautics and Space Administration
NOTICES
Grants and cooperative agreements; availability, etc.:
Ecology and Oceanography of harmful algal blooms project, 16930–16937

National Drug Control Policy Office
NOTICES
Meetings:
Drug-Free Communities Advisory Commission, 16970

National Gambling Impact Study Commission
NOTICES
Meetings, 17019

National Highway Traffic Safety Administration
RULES
Light truck fuel economy standards, 16860–16862

National Institute of Corrections
NOTICES
Grants and cooperative agreements; availability, etc.:
Gender-Specific Responses: Research, Practice and Guiding Principles, 17014

National Oceanic and Atmospheric Administration
RULES
Fishery conservation and management:
West Coast States and Western Pacific fisheries—
Pacific Coast groundfish, 16862–16867
PROPOSED RULES
Fishery conservation and management:
Northeastern United States fisheries—
Summer flounder, scup, and black sea bass, 16891–16896
NOTICES
Grants and cooperative agreements; availability, etc.:
Ecology and oceanography of harmful algal blooms project, 16930–16937
Meetings:
North Pacific Fishery Management Council, 16937
Permits:
Endangered and threatened species, 16937–16938

National Park Service
NOTICES
Meetings:
Jimmy Carter National Historic Site Advisory Commission, 16996–16997

National Science Foundation
NOTICES
Grants and cooperative agreements; availability, etc.:
Ecology and oceanography of harmful algal blooms project, 16930–16937
Meetings:
Advancement of Women and Minorities in Science, Engineering and Technology Development, 17019

Nuclear Regulatory Commission
NOTICES
Environmental statements; availability, etc.:
Carolina Power & Light Co., 17019–17021
Meetings; Sunshine Act, 17021
Operating licenses, amendments; no significant hazards considerations; biweekly notices, 17021–17040
Regulatory agreements:
Ohio; correction, 17040

Office of United States Trade Representative
See Trade Representative, Office of United States

Pension Benefit Guaranty Corporation
NOTICES
Agency information collection activities:
Proposed collection; comment request, 17040–17041

Personnel Management Office
RULES
Employment:
Reduction in force—
Service credit; retention record, 16797–16801

Postal Service
RULES
Domestic mail manual:
Package reallocation for periodicals and standard mail (A) flats placed on pallets and new labeling list L001; implementation, 16814–16840

Presidential Documents
PROCLAMATIONS
Special observances:
Cancer Control Month (Proc. 7177), 17073–17076
Child Abuse Prevention Month, National (Proc. 7178), 17077–17078

Prisons Bureau
NOTICES
Agency information collection activities:
Submission for OMB review; comment request, 17014–17015

Public Health Service
See Centers for Disease Control and Prevention
See Food and Drug Administration
See Health Resources and Services Administration

Railroad Retirement Board
NOTICES
Privacy Act:
Systems of records, 17041–17042

Research and Special Programs Administration
PROPOSED RULES
Pipeline safety:
Hazardous liquid transportation—
Gas and hazardous liquid pipelines; corrosion control, 16885–16889
Liquefied compressed gases, 16882
Hazardous liquified natural gas facilities; safety standards—
Gas and hazardous liquid pipeline repair, 16882–16885

Securities and Exchange Commission
NOTICES
Meetings:
Securities laws uniformity annual conference; proposed agenda; comment request, 17042–17050
Applications, hearings, determinations, etc.:
K2 Design,Inc., 17042

Small Business Administration
NOTICES
Grants and cooperative agreements; availability, etc.:
Drug-free workplace demonstration program, 17050
License surrenders:
Cactus Capital Co., 17050
Meetings; district and regional advisory councils:
Nebraska, 17050–17051
New York, 17051
Meetings; district and regional advisory councils:
Nebraska, 17051
Reporting and Recordkeeping Requirements, 17051

Social Security Administration
NOTICES
Agency information collection activities:
Proposed collection; comment request, 17051–17052

State Department
NOTICES
Pipeline facilities on U.S. borders; permit applications:
Portland Pipe Line Corp., 17052

Surface Mining Reclamation and Enforcement Office
NOTICES
Privacy Act:
Systems of records, 16997–16998

Surface Transportation Board
NOTICES
Railroad services abandonment:
Union Pacific Railroad Co., 17056–17057

Trade Representative, Office of United States
NOTICES
Unfair trade practices, petitions, etc.:
Foreign countries engaging in discriminatory government procurement practices; comment request, 17053

Transportation Department
See Coast Guard
See Federal Aviation Administration
See Federal Highway Administration
See Federal Transit Administration
See National Highway Traffic Safety Administration
See Research and Special Programs Administration
See Surface Transportation Board

Treasury Department
See Customs Service
See Internal Revenue Service

United States Information Agency
NOTICES
Art objects; importation for exhibition:
Dresden in the Ages of Splendor and Enlightenment: 18th Century Paintings form the Old Masters Picture Gallery, 17060

Separate Parts In This Issue

Part II
Department of Transportation, Federal Transit Administration, 17061–17071

Part III
The President, 17073–17078

Reader Aids
Consult the Reader Aids section at the end of this issue for phone numbers, online resources, finding aids, reminders, and notice of recently enacted public laws.

CFR PARTS AFFECTED IN THIS ISSUE

A cumulative list of the parts affected this month can be found in the Reader Aids section at the end of this issue.

3 CFR
Proclamation:
7177 17075
7178 17077

5 CFR
351 16797

14 CFR
39 (5 documents) 16801, 16803, 16805, 16808, 16810

19 CFR
Proposed Rules:
19 16868

23 CFR
Proposed Rules:
777 16870

33 CFR
100 (2 documents) 16812, 16813

39 CFR
111 16814

40 CFR
180 (4 documents) 16840, 16843, 16850, 16856
Proposed Rules:
180 16874
185 16874
186 16874

47 CFR
Proposed Rules:
25 16880

49 CFR
533 16860
Proposed Rules:
171 16882
177 16882
178 16882
180 16882
192 (2 documents) 16882, 16885
195 (2 documents) 16882, 16885
611 17062

50 CFR
600 16862
660 16862
Proposed Rules:
17 (2 documents) 16890
648 16891

Rules and Regulations

Federal Register
Vol. 64, No. 66
Wednesday, April 7, 1999

This section of the FEDERAL REGISTER contains regulatory documents having general applicability and legal effect, most of which are keyed to and codified in the Code of Federal Regulations, which is published under 50 titles pursuant to 44 U.S.C. 1510.

The Code of Federal Regulations is sold by the Superintendent of Documents. Prices of new books are listed in the first FEDERAL REGISTER issue of each week.

OFFICE OF PERSONNEL MANAGEMENT

5 CFR Part 351

RIN 3206–AI09

Reduction in Force Service Credit; Retention Records

AGENCY: Office of Personnel Management.

ACTION: Final rulemaking.

SUMMARY: The Office of Personnel Management (OPM) is issuing final regulations that cover service credit for reduction in force purposes. These final regulations also cover access to reduction in force records by employees and their representatives.

DATES: These regulations are effective May 7, 1999.

FOR FURTHER INFORMATION CONTACT: Thomas A. Glennon or Jacqui R. Yeatman at (202) 606–0960, FAX (202) 606–2329.

SUPPLEMENTARY INFORMATION:

Background

On August 14, 1998, OPM published proposed regulations (63 FR 43640) that covered the crediting of civilian and uniformed service for purposes of reduction in force competition under part 351 of this title. These proposed regulations also covered who has access to reduction in force retention records, when that access is available, and what records are available for review.

Comments (Overview)

OPM received six comments on the proposed regulations: one from a Federal agency, two from veterans' organizations, one from an employee association, one from an employees' union, and one from an individual employee.

Comments on Reduction in Force Service Credit Regulations

OPM's reduction in force regulations found in part 351 are published under authority of 5 U.S.C. 3502(a), which originated in Public Law 78–359 (the Veterans' Preference Act of 1944). The statute provides that OPM's reduction in force regulations must give effect to four factors in releasing employees: (1) Tenure of employment (i.e., type of appointment) (5 U.S.C. 3502(a)(1)); (2) veterans' preference (5 U.S.C. 3502(a)(2)); (3) length of service (5 U.S.C. 3502(a)(3)); and (4) performance ratings (5 U.S.C. 3502(a)(4)).

The proposed regulations clarify longstanding OPM policy on the crediting of civilian and uniformed service for purposes of reduction in force competition under part 351 of this title.

These final regulations cover what types of service are creditable when an agency establishes the order of retention for competing employees in a reduction in force.

The agency concurred with the proposed regulations as written, including the provisions covering both reduction in force service credit and access to retention records by employees and their representatives.

The employee association objected to proposed § 351.503(b)(3), which provides that an employee may not receive dual reduction in force service credit for service performed on active duty in the Armed Forces that is concurrent with civilian employment as a Federal employee.

Proposed § 351.503(b)(3) is adopted without revision. This prohibition against double reduction in force service credit is consistent with the provisions of the statute (i.e., 5 U.S.C. 3502(a)(3)), and longstanding appellate interpretation applicable to OPM's governmentwide programs authorized by 5 U.S.C. (see *Seltzer* v. *Office of Personnel Management*, 833 F.2d 975 (Fed. Cir., 1987)).

The two veterans' organizations objected to proposed § 351.503(b)(2)(i), which provides that a retired member of a uniformed service who is receiving retired pay based upon 20 or more years of active service in the Armed Forces is generally entitled to credit under this part only for the length of time in active service in the Armed Forces during a war, or active duty served in a campaign or expedition for which a campaign badge or expeditionary medal has been authorized.

Proposed § 351.503(b)(2)(ii) provides that a retired member of a uniformed service with 20 or more years of creditable active service in the Armed Forces is entitled to reduction in force service credit for all of that time only if the employee is considered a preference eligible under 5 U.S.C. 3501(a)(3), as implemented in § 351.501(d)(1).

As covered in the summary below of the final reduction in force service credit regulations, proposed § 351.503(b)(2)(i) is adopted without revision. The final regulation incorporates the statutory requirements of 5 U.S.C. 3502(a)(A) and (B), which originated in Public Law 88–448 (the Dual Compensation Act of 1964).

Referencing 5 U.S.C. 3501(a)(3)(A), 5 U.S.C. 3502(a)(B)(ii) (from Pub. L. 88–448) provides that a retired member of a uniformed service with 20 or more years of creditable Armed Forces service is entitled to reduction in force retention service credit only if the individual is receiving a disability retirement from the Armed Forces resulting from injury or disease received in the line of duty as a direct result of armed conflict, or caused by an instrumentality of war that incurred in the line of duty during a period of war as defined by 38 U.S.C. 101 and 301. (OPM implements 5 U.S.C. 3501(a)(3)(A) in § 351.501(d)(1) of the reduction in force regulations.)

Summary of Final Reduction in Force Service Credit Regulations

Final § 351.503(a) provides that all civilian service as a Federal employee, as defined in 5 U.S.C. 2105(a), is creditable for purposes of determining the reduction in force rights of a competing employee. Civilian service that does not meet the definition set forth in 5 U.S.C. 2105(a) is creditable for retention purposes only if specifically authorized by statute.

Final § 351.503(b)(2)(i) provides that, except as provided in § 351.503(b)(2)(ii), a retired member of a uniformed service who is receiving retired pay based upon 20 or more years of active service in the Armed Forces is entitled to credit under this part only for the length of time in active service in the Armed Forces during a war, or active duty served in a campaign or expedition for which a campaign badge or expeditionary medal

has been authorized. (For additional information on § 351.503(b)(2)(i), refer to the Supplementary Information section above with ''Comments on the Reduction in Force Service Credit Regulations.'')

Final § 351.503(b)(2)(ii) provides that a retired member of a uniformed service with 20 or more years of creditable active service in the Armed Forces is entitled to reduction in force service credit for all of the individual's active service in the Armed Forces only if the employee is considered a preference eligible under 5 U.S.C. 3501(a)(3), as implemented in § 351.501(d)(1).

Final § 351.503(b)(3) provides that an employee may not receive dual retention service credit for service performed on active duty in the Armed Forces that was performed during concurrent civilian employment as a Federal employee.

Final § 351.503(c)(1) provides that the agency is responsible for establishing both the service computation date, and the adjusted service computation date, applicable to each employee competing for retention. Also, the agency is responsible for adjusting the service computation dates to withhold retention service credit for noncreditable service.

Final § 351.503(c)(2) provides that the service computation date includes all actual creditable service under §§ 351.503(a) and (b).

Final § 351.503(c)(3) provides that the adjusted service computation date includes all actual creditable service under §§ 351.503(a) and (b), and additional retention service credit for performance authorized by § 351.504(d).

Final § 351.503(d) covers the calculation of the service computation date for retention purposes.

Final § 351.503(e) covers the calculation of the adjusted service computation date that includes additional service credit for retention purposes that is authorized by § 351.504(d).

OPM further implements § 351.503 through instructions found in the OPM Operating Manual, ''The Guide to Processing Personnel Actions,'' Chapter 6, ''Determining Creditable Service and Determining Service Computation Dates (SCD's).''

Comments on the Reduction in Force Regulations Covering Retention Records

As previously noted in the ''Comments (Overview)'' section of Supplementary Information, the agency that commented on the proposals concurred with the regulations as written, including the provisions on both reduction in force service credit and access to retention records by employees and their representatives.

The employee who commented on the proposed regulations only addressed the provisions covering access to reduction in force records. The employee supported the proposed regulations as written. The employee added that, under the Privacy Act (see the following paragraphs below for additional information on application of the Privacy Act), her former agency denied her access to retention records even after she received a specific notice of separation by reduction in force. The employee concluded that proposed § 351.505 would prevent the recurrence of a similar situation for other employees reached for reduction in force actions.

The employees' union objected to proposed § 351.505(b)(1) on the basis that the regulation violates 5 U.S.C. 552a(d)(1), which is part of the Privacy Act. Specifically, the union argues that proposed § 351.505(b)(1) improperly limited employees' access to retention records and related records only to an employee (including an employee's representative) who actually receives a specific notice of reduction in force. The employees' union also objected to proposed § 351.505(b)(1) on the basis that it violates § 351.201(c), which provides that each agency is responsible for applying OPM's reduction in force regulations uniformly and consistently.

As covered in the summary below of the final reduction in force service credit regulations, proposed § 351.505(b)(1) is adopted without revision.

The union is incorrect in its assertion that 5 U.S.C. 552a(d)(1) of the Privacy Act is applicable to § 351.505 and the retention records that an agency develops under authority of part 351 of this chapter.

As noted by the union, 5 U.S.C. 552a(a)(5) states that ''the term 'system of records'' means a group of any records under the control of any agency from which information is retrieved by the name of the individual or by some identifying number, symbol, or other identifying particular assigned to the individual.'' However, the retention records covered by § 351.505 are in fact *''retention register(s)''* developed and maintained under authority of § 351.404 rather than a system of records covered by 5 U.S.C. 552a(d)(1) of the Privacy Act.

Information from retention registers is not first retrieved on the basis of an employee's name or other personal identifying information, but instead on the basis of groups of interchangeable positions, and next on the basis of the four retention factors that define reduction in force competition under part 351 of this chapter. § 351.404(a) provides in pertinent part that ''When a competing employee is to be released from a competitive level under this part (i.e., part 351 of this chapter), the agency shall establish a separate retention register for that ''*competitive level.* The retention register is prepared from the current retention records of employees.'' (Emphasis added for reference.)

Section 351.403 similarly provides that each competitive level (which serves as the basis for a retention register) is developed first from the agency's identification and retrieval of groups of positions rather than the names or other identifying information of individual employees. Specifically, § 351.403(a)(1) and (2) provide that ''(1) Each agency shall establish competitive levels consisting of all positions in a competitive area which are in the same grade (or occupational level) and classification series, and which are similar enough in duties, qualification requirements, pay schedules, and working conditions so that the agency may reassign the incumbent of one position to any of the other positions in the level without undue interruption.

''(2) Competititive level determinations are based on each employee's official position, not the employee's personal qualifications.''

Accepting the union's argument that 5 U.S.C. 552a(d)(1) of the Privacy Act is applicable to § 351.505, and a retention register developed and maintained under authority of § 351.404, would mean that a released employee (and the employee's representative) does not have access to any retention records that contained the name, or other identifying retention (such as service dates), of employees competing for positions in the reduction in force. This would result in the same situation described by the employee who commented above on the proposed regulations that, because of its interpretation of the Privacy Act, her agency denied her access to any retention records containing specific information relating to other employees in her competitive area.

The union is also incorrect in its conclusion that proposed § 351.505(b) violates § 351.201(c), which provides that ''Each agency is responsible for assuring that the provisions in this part (i.e., part 351 of this chapter) are uniformly and consistently applied in any one reduction in force.''

Proposed § 351.505(b) for the first time requires agencies to provide retention records to the representative of an employee who has received a

specific notice of reduction in force. Previously, there was no authority in OPM's regulations for agencies to provide union representatives (or any individual other than the employee) with this essential information unless the employee subsequently filed a reduction in force appeal or grievance.

Similarly, proposed § 351.505(c) for the first time specifies the type of retention-related information that an agency would be required to make available to an employee (and/or the employee's representative) who is reached for a reduction in force action. For example, the agency would now be required to provide employees (and their representatives) with access to retention records evidencing how the employee was reached for release from the competitive level, as well as any records related to an employee's potential bump and retreat rights. No longer could an agency claim that it met its obligation to provide retention information to a released employee by simply giving the employee a ''sanitized'' retention register with all of the pertinent information blocked out.

The union is correct in stating that proposed § 351.505(b) would not extend access to agencies' retention records to the public realm. However, the union is incorrect in its argument that proposed § 351.505(b)(1) violates present § 351.201(c), which provides that an agency must apply OPM's reduction in force regulations uniformly and consistently.

OPM clearly recognizes that reduction in force actions impact upon people, sometimes even resulting in actions such as involuntary separations and downgradings. Proposed § 351.505(b) respects the privacy of all individual employees who have received notices of reduction in force actions while still providing them (and their representatives) with a right to relevant information concerning their agency's application of reduction in force procedures to them.

Similarly, § 351.201(c) requires that the agency must apply the same retention procedures to all employees who received specific reduction in force notices (e.g., the agency may not establish different competitive areas based upon grades or classification series). There is no basis for the union to expand the scope of § 351.201(c) and conclude that any employee (or the employee's representative) has the right to view all retention registers. Again, we believe that the policy in proposed § 351.505(b) provides each employee who is reached for a reduction in force action with full information concerning how the agency determined the employee's retention rights, while still recognizing the personal sensitivity of the situation.

Also, the union is incorrect in stating that proposed § 351.505(b) violates 5 U.S.C. 7114(b)(4), which requires an agency to furnish information to a union that is acting as a collective bargaining agent. The union argues that because proposed § 351.505(b) would limit unions' access to employees' retention records, the regulation would constitute an unfair labor practice under 5 U.S.C. 7114(b)(4).

In fact, 5 U.S.C. 7114(b)(4) specifically states that an agency must furnish a union certain information ''to the extent not prohibited by law.'' To the extent that proposed § 351.505(b) prohibits release of information to unions concerning reduction in force retention records, the release of that information is ''prohibited by law'' for purposes of 5 U.S.C. 7114(b)(4). OPM's interpretation is that proposed § 351.505(b) is a regulation that has the force and effect of law. Therefore, proposed § 351.505(b) could not, and does not, violate 5 U.S.C. 7114(b)(4), which is the applicable controlling statute.

Finally, the union objected to proposed § 351.505(f), which provides that an agency must preserve all registers and records relating to a reduction in force for at least 1 year after the date the agency issues specific notices of reduction in force. As an alternative, the union asked that OPM require agencies to retain all records related to a reduction in force for at least 5 years.

As covered in the summary below of the final reduction in force service credit regulations, proposed § 351.505(f) is adopted without revision.

The union maintained that proposed § 351.505(f) would limit the ability of employees to file appeals or grievances that would potentially establish a link between agency actions in a current reduction in force with one or more previous reduction in force actions conducted by the agency more than 1 year ago. The union used examples such as an employee competing in successive reduction in force actions on a one person competitive level.

The union is incorrect in its assumptions.

Reduction in force actions under authority of part 351 of this chapter are based upon organizational changes, as defined in § 351.201(a)(2), in which employees compete for retention based upon the four factors set forth in 5 U.S.C. 3502(a) (1)–(4).

Section 351.506(a) provides that an employee's rights and benefits in a single reduction in force are based upon the effective date of that reduction in force action. An employee who is separated or downgraded by reduction in force under authority of part 351 and believes that the agency improperly applied OPM's reduction in force regulations in determining the employee's retention rights in that reduction in force has a basic right, as applicable, to file a timely appeal to the Merit Systems Protection Board, or to file a grievance under the provisions of a controlling collective bargaining agreement.

(For reference, § 351.901 provides that a separated or downgraded employee has a basic right to file an appeal to the Merit Systems Protection Board; § 1201.22(b) of the Board's regulations provides that the employee must file the appeal within 30 days of the effective date of the reduction in force action. Section 1201.3(c)(1) of the Board's regulations provides that an employee who is covered by a collective bargaining agreement under 5 U.S.C. 7121 has a basic right to follow the negotiated grievance procedures contained in the agreement for resolving any action that could otherwise be appealed to the Board, except as otherwise provided in § 1201.3(c).)

Turning to the union's example, the fact that an employee was placed in a one person competitive level for two reduction in force actions likely means that the employee simply continues to hold the same unique position. As previously noted, § 351.201(c) provides that the agency is responsible ''* * * for assuring that the provisions in this part are uniformly and consistently applied in *any one reduction in force*.'' (Emphasis added for reference.) Similarly, since § 351.506(a) provides that an employee's retention rights and benefits in a single reduction in force are based upon the effective date of that reduction in force action, each reduction in force is a distinct event for which the agency is responsible under authority of § 351.204. There is no relation between retention records used in a prior reduction in force and records in a later reduction in force.

OPM believes that, again consistent with agency responsibility under authority of § 351.204, the agency may determine whether or not to retain retention records for more than 1 year, as well as the length of the extended retention. For example, an agency may decide to retain the retention records resulting from actions affecting 100 employees longer than retention records resulting from the closure of a duty station staffed with three employees.

Summary of Final Reduction in Force Regulations on Retention Records

Final § 351.505(a) provides that the agency is responsible for maintaining the correct personnel records that are used to determine employees' retention standing.

Final § 351.505(b) provides that the agency must allow its retention registers and related records to be inspected by an employee of the agency who has received a specific reduction in force notice, and/or the employee's representative if the representative is acting on behalf of that individual employee. Previously, there was no authority permitting an employee's representative to have access to pertinent retention records. The representative now has access to pertinent retention records when acting on behalf of an individual employee who has received a specific notice of reduction in force under part 351 of this chapter.

Final § 351.505(b) also provides that an authorized representative of OPM has the right to review an agency's retention records.

Final § 351.505(c) provides that an employee who has received a specific notice of reduction in force has the right to review any completed records used by the agency in a reduction in force action that was taken, or will be taken, against the employee.

Final § 351.505(d) provides that an employee who has not received a specific reduction in force notice has no right to review the agency's retention registers and related records.

Final § 351.505(e) provides that the agency is responsible for ensuring that each employee's access to retention records is consistent with both the Freedom of Information Act and the Privacy Act.

Final § 351.505(f) provides that the agency must preserve all registers and records relating to a reduction in force for at least 1 year after the date the agency issues specific reduction in force notices.

Regulatory Flexibility Act

I certify that this regulation will not have a significant economic impact on a substantial number of small entities because it only affects Federal employees.

List of Subjects in Part 351

Administrative practice and procedure, Government employees, U.S. Office of Personnel Management.

Janice R. Lachance,

Director.

Accordingly, OPM is amending part 351 of title 5, Code of Federal Regulations, as follows:

PART 351—REDUCTION IN FORCE

1. The authority citation for part 351 continues to read as follows:

Authority: 5 U.S.C. 1302, 3502, 3503; sec. 351.801 also issued under E.O. 12828, 58 FR 2965.

2. Section 351.503 is revised to read as follows:

§ 351.503 Length of service.

(a) All civilian service as a Federal employee, as defined in 5 U.S.C. 2105(a), is creditable for purposes of this part. Civilian service performed in employment that does not meet the definition of *Federal employee* set forth in 5 U.S.C. 2105(a) is creditable for purposes of this part only if specifically authorized by statute as creditable for retention purposes.

(b)(1) As authorized by 5 U.S.C. 3502(a)(A), all active duty in a uniformed service, as defined in 5 U.S.C. 2101(3), is creditable for purposes of this part, except as provided in paragraphs (b)(2) and (b)(3) of this section.

(2) As authorized by 5 U.S.C. 3502(a)(B), a retired member of a uniformed service who is covered by § 351.501(d) is entitled to credit under this part only for:

(i) The length of time in active service in the Armed Forces during a war, or in a campaign or expedition for which a campaign or expedition badge has been authorized; or

(ii) The total length of time in active service in the Armed Forces if the employee is considered a preference eligible under 5 U.S.C. 2108 and 5 U.S.C. 3501(a), as implemented in § 351.501(d).

(3) An employee may not receive dual service credit for purposes of this part for service performed on active duty in the Armed Forces that was performed during concurrent civilian employment as a Federal employee, as defined in 5 U.S.C. 2105(a).

(c)(1) The agency is responsible for establishing both the service computation date, and the adjusted service computation date, applicable to each employee competing for retention under this part. If applicable, the agency is also responsible for adjusting the service computation date and the adjusted service computation date to withhold retention service credit for noncreditable service.

(2) The service computation date includes all actual creditable service under paragraph (a) and paragraph (b) of this section.

(3) The adjusted service computation date includes all actual creditable service under paragraph (a) and paragraph (b) of this section, and additional retention service credit for performance authorized by § 351.504(d).

(d) The service computation date is computed on the following basis:

(1) The effective date of appointment as a Federal employee under 5 U.S.C. 2105(a) when the employee has no previous creditable service under paragraph (a) or (b) of this section; or if applicable,

(2) The date calculated by subtracting the employee's total previous creditable service under paragraph (a) or (b) of this section from the most recent effective date of appointment as a Federal employee under 5 U.S.C. 2105(a).

(e) The adjusted service computation date is calculated by subtracting from the date in paragraph (d)(1) or (d)(2) of this section the additional service credit for retention authorized by § 351.504(d).

3. Section 351.505 is revised to read as follows:

§ 351.505 Records.

(a) The agency is responsible for maintaining correct personnel records that are used to determine the retention standing of its employees competing for retention under this part.

(b) The agency must allow its retention registers and related records to be inspected by:

(1) An employee of the agency who has received a specific reduction in force notice, and/or the employee's representative if the representative is acting on behalf of the individual employee; and

(2) An authorized representative of OPM.

(c) An employee who has received a specific notice of reduction in force under authority of subpart H of this part has the right to review any completed records used by the agency in a reduction in force action that was taken, or will be taken, against the employee, including:

(1) The complete retention register with the released employee's name and other relevant retention information (including the names of all other employees listed on that register, their individual service computation dates calculated under § 351.503(d), and their adjusted service computation dates

calculated under § 351.503(e)) so that the employee may consider how the agency constructed the competitive level, and how the agency determined the relative retention standing of the competing employees; and

(2) The complete retention registers for other positions that could affect the composition of the employee's competitive level, and/or the determination of the employee's assignment rights (e.g., registers to which the released employee may have potential assignment rights under § 351.701(b) and (c)).

(d) An employee who has not received a specific reduction in force notice has no right to review the agency's retention registers and related records.

(e) The agency is responsible for ensuring that each employee's access to retention records is consistent with both the Freedom of Information Act (5 U.S.C. 552), and the Privacy Act (5 U.S.C. 552a).

(f) The agency must preserve all registers and records relating to a reduction in force for at least 1 year after the date it issues a specific reduction in force notice.

[FR Doc. 99–8587 Filed 4–6–99; 8:45 am]

BILLING CODE 6325–01–P

DEPARTMENT OF TRANSPORTATION

Federal Aviation Administration

14 CFR Part 39

[Docket No. 99–SW–16–AD; Amendment 39–11111; AD 99–06–15]

RIN 2120–AA64

Airworthiness Directives; Bell Helicopter Textron Canada Model 407 Helicopters

AGENCY: Federal Aviation Administration, DOT.

ACTION: Final rule; request for comments.

SUMMARY: This document publishes in the **Federal Register** an amendment adopting Airworthiness Directive (AD) 99–06–15 which was sent previously to all known U.S. owners and operators of Bell Helicopter Textron Canada (BHTC) Model 407 helicopters by individual letters. This AD requires installing a tail rotor pitch-limiting left-pedal stop, installing an airspeed limitation placard, marking a never-exceed velocity (Vne) placard on all airspeed indicators, and revising the Limitations section of the Rotorcraft Flight Manual (RFM). This amendment is prompted by three accidents involving inflight tail rotor blade strikes against the tailboom. The actions specified by this AD are intended to prevent the tail rotor blades from striking the tailboom, which could result in separation of the aft section of the tailboom with the tail rotor gearbox and vertical fin, and subsequent loss of control of the helicopter.

DATES: Effective April 22, 1999, to all persons except those persons to whom it was made immediately effective by Priority Letter AD 99–06–15, issued on March 9, 1999, which contained the requirements of this amendment.

The incorporation by reference of certain publications listed in the regulations is approved by the Director of the Federal Register as of April 22, 1999.

Comments for inclusion in the Rules Docket must be received on or before June 7, 1999.

ADDRESSES: Submit comments in triplicate to the Federal Aviation Administration (FAA), Office of the Regional Counsel, Southwest Region, Attention: Rules Docket No. 99–SW–16–AD, 2601 Meacham Blvd., Room 663, Fort Worth, Texas 76137.

The applicable service information may be obtained from Bell Helicopter Textron Canada, 12,800 Rue de l'Avenir, Mirabel, Quebec JON1LO, telephone (800) 463–3036, fax (514) 433–0272. This information may be examined at the FAA, Office of the Regional Counsel, Southwest Region, 2601 Meacham Blvd., Room 663, Fort Worth, Texas; or at the Office of the Federal Register, 800 North Capitol Street, NW., suite 700, Washington, DC.

FOR FURTHER INFORMATION CONTACT: Jurgen Priester, Aerospace Engineer, FAA, Rotocraft Directorate, Rotorcraft Certification Office, ASW–170, 2601 Meacham Blvd., Fort Worth, Texas, 76137, telephone (817) 222–5159, fax (817) 222–5783.

SUPPLEMENTARY INFORMATION: On September 25, 1998, the FAA issued Priority Letter AD 98–20–41, applicable to BHTC Model 407 helicopters, which restricted the airspeed to 25 knots indicated airspeed less than the Vne airspeeds indicated on the airspeed limitation placard. The priority letter also required installing an airspeed limitation placard, marking a redline at a Vne of 115 knots and applying a red arc from 115 to 140 knots on all airspeed indicators, and revising the Limitations section of the RFM that requires pilots to maintain yaw trim within one ball width of the centered position of the turn and bank (slip) indicator. That action was prompted by two accidents involving in-flight tail rotor blade strikes against the tailboom on Model 407 helicopters. Persons aboard both helicopters reported hearing a loud ''bang'' immediately prior to experiencing a loss of directional control of the helicopter. Subsequent inspection of the helicopters revealed that the aft section of the tailboom, including the tail rotor, the tail rotor gearbox, and the vertical fin, had separated from the helicopters in-flight. In both cases, inspection of the retrieved tailbooms confirmed that the tailbooms had been struck at least three times by the rotating tail rotor blades. The specific cause of these two in-flight tail rotor blade strikes against the tailboom has not been determined; however, flight test data indicated that tail rotor blade strikes were more likely to occur at higher airspeeds and altitudes. The data indicated that the cause of the tail rotor strikes is excessive tail rotor blade flapping. The reason for the excessive tail rotor blade flapping is unknown, but it may be aggravated by left pedal input. Excessive tail rotor flapping, if not corrected, could result in the tail rotor blades striking the tailboom, separation of the aft section of the tailboom with the tail rotor gearbox and vertical fin, and subsequent loss of control of the helicopter. Transport Canada, which is the airworthiness authority for Canada, issued AD CF–98–36, dated September 25, 1998, to require that the airspeed be reduced to minimize the risk of a tailboom strike during flight. After the issuance of Priority Letter AD 98–20–41, BHTC issued Technical Bulletin No. 407–98–13, dated December 12, 1998 (TB), which recommended a reduction in Vne of only 15 KIAS with the installation of a left pedal stop to limit maximum tail rotor blade pitch

Transport Canada then further notified the FAA that an unsafe condition may continue to exist on BHTC Model 407 helicopters. Transport Canada advised that installing the tail rotor pitch-limiting left-pedal stop in accordance with the TB and further reducing the Vne is required to minimize the risk of a tailboom strike during flight. Transport Canada classified the TB as mandatory, and issued AD CF–98–36R3, dated March 5, 1999, in order to assure the continued airworthiness of these helicopters in Canada. That action was prompted by a third accident involving an in-flight tail rotor blade strike against the tailboom on BHTC Model 407 helicopters. The pilot in this latest accident reported that the helicopter was in straight and level cruise flight at 110 KIAS in non-turbulent conditions when the

helicopter experienced an uncommanded left pedal hardover. The pilot reported that this uncommanded full left pedal movement was followed by a loud ''bang'' and then a loss of directional control of the helicopter. Subsequent inspection of the helicopter revealed that the aft section of the tailboom, including the tail rotor, the tail rotor gearbox, and the vertical fin, had separated from the helicopter in-flight. This helicopter did not have the tail rotor pitch-limiting left-pedal stop installed.

Since the unsafe condition described is likely to exist or develop on other BHTC Model 407 helicopters of the same type design, the FAA issued Priority Letter AD 99–06–15 to supersede Priority Letter AD 98–20–41. Priority Letter AD 99–06–15 requires, before further flight, installing a tail rotor pitch-limiting left-pedal stop and adjusting the rigging of the directional controls, installing a new airspeed limitation placard, marking a new Vne limit of 100 knots indicated airspeed on all airspeed indicators, and revising the RFM to reduce the airspeed limitation further and to maintain the previously revised yaw-operational limitations. The priority letter AD is intended to prevent the tail rotor blades from striking the tailboom, which could result in separation of the aft section of the tailboom with the tail rotor gearbox and vertical fin, and subsequent loss of control of the helicopter. The actions specified by the superseding priority letter AD are required to be accomplished in accordance with the TB described previously. The short compliance time involved is required because the previously described critical unsafe condition can adversely affect the structural integrity of the helicopter. Therefore, installing a tail rotor pitch-limiting left-pedal stop, installing a new airspeed limitation placard, marking a new Vne limit on all airspeed indicators, and revising the RFM are required prior to further flight, and this AD must be issued immediately.

Since it was found that immediate corrective action was required, notice and opportunity for prior public comment thereon were impracticable and contrary to the public interest, and good cause existed to make the AD effective immediately by individual letters issued on March 9, 1999 to all known U.S. owners and operators of BHTC Model 407 helicopters. These conditions still exist, and the AD is hereby published in the **Federal Register** as an amendment to section 39.13 of the Federal Aviation Regulations (14 CFR 39.13) to make it effective to all persons.

The FAA estimates that 200 helicopters of U.S. registry will be effected by this AD, that it will take approximately 2 work hours per helicopter to accomplish the required actions, and the average labor rate is $60 per work hour. Required parts will cost approximately $245 per helicopter. Based on these figures the total cost impact of the AD on U.S. operators is estimated to be $73,000.

Comments Invited

Although this action is in form of a final rule that involves requirements affecting flight safety and, thus, was not preceded by notice and an opportunity for public comment comments are invited on this rule. Interested persons are invited to comment on this rule submitting such written data, views, or arguments as they may desire. Communications should identify the Rules Docket number and be submitted in triplicate to the address specified under the caption **ADDRESSES.** All communications received on or before the closing date for comments will be considered, and this rule may be amended in light of the comments received. Factual information that supports the commenter's ideas and suggestions is extremely helpful in evaluating the effectiveness of the AD action and determining whether additional rulemaking action would be needed.

Comments are specifically invited on the overall regulatory, economic, environmental, and energy aspects of the rule that might suggest a need to modify the rule. All comments submitted will be available, both before and after the closing date for comments, in the Rules Docket for examination by interested persons. A report that summarizes each FAA-public contact concerned with the substance of this AD will be filed in the Rules Docket.

Comments wishing the FAA to acknowledge receipt of their comments submitted in response to this rule must submit a self-addressed, stamped postcard on which the following statement is made: ''Comments to Docket No. 99–SW–16–AD.'' The postcard will be stamped and returned to the commenter.

The regulations adopted herein will not have substantial direct effects on the States, on the relationship between the national government and the States, or on the distribution of power and responsibilities among the various levels of government. Therefore, in accordance with Executive Order 12612, it is determined that this final rule does not have sufficient federalism implications to warrant the preparation of a Federalism Assessment.

The FAA has determined that this regulation is an emergency regulation that must be issued immediately to correct an unsafe condition in aircraft, and that it is not a ''significant regulatory action'' under Executive Order 12866. It has been determined further that this action involves an emergency regulation under DOT Regulatory Policies and Procedures (44 FR 11034, February 26, 1997). If it is determined that this emergency regulation otherwise would be significant under DOT Regulatory Policies and Procedures, a final regulatory evaluation will be prepared and placed in the Rules Docket. A copy of it, if filed, may be obtained from the Rules Docket at the location provided under the caption **ADDRESSES.**

List of Subjects in 14 CFR Part 39

Air transportation, Aircraft, Aviation safety, Incorporation by reference, Safety.

Adoption of the Amendment

Accordingly, pursuant to the authority delegated to me by the Administrator, the Federal Aviation Administration amends part 39 of the Federal Aviation Regulations (14 CFR part 39) as follows:

PART 39—AIRWORTHINESS DIRECTIVES

1. The authority citation for part 39 continues to read as follows:

Authority: 49 U.S.C. 106(g), 40113, 44701.

§ 39.13 [Amended]

2. Section 39.13 is amended by adding a new airworthiness directive to read as follows:

AD 99–06–15 Bell Helicopter Textron Canada: Amendment 39–11111. Docket No. 99–SW–16–AD.

Applicability: Model 407 helicopters, certificated in any category.

Note 1: This AD applies to each helicopter identified in the preceding applicability provision, regardless of whether it has been otherwise modified, altered, or repaired in the area subject to the requirements of this AD. For helicopters that have been modified, altered, or repaired so that the performance of the requirements of this AD is affected, the owner/operator must request approval for an alternative method of compliance in accordance with paragraph (i) of this AD. The request should include an assessment of the effect of the modification, alteration, or repair on the unsafe condition addressed by this AD; and, if the unsafe condition has not been eliminated, the request should include specific proposed actions to address it.

Compliance: Required before further flight, unless accomplished previously.

To prevent the tail rotor blades from striking the tailboom, which could result in separation of the aft section of the tailboom with the tail rotor gearbox and vertical fin, and subsequent loss of control of the helicopter, accomplish the following:

(a) Install a stop that limits the maximum distance that the left pedal can travel in accordance with Part I of the Accomplishment Instructions in Bell Helicopter Textron Canada Technical Bulletin 407–98–13, dated December 12, 1998 (TB).

(b) Adjust the rigging of the directional controls in accordance with Part II of the Accomplishment Instructions in the TB.

(c) Install the airspeed limitation placard shown in Figure 1 of this AD so that it completely covers and obscures the airspeed limitation placard, P/N 407–070–201–103. Ensure that the replacement placard is at least 2 1/16-inches tall and 3 9/16-inches long.

FIGURE.—407 AIRSPEED LIMITATIONS-KNOTS-IAS

[AD 99–06–15]

Maximum Autorotation VNE 100 KIAS											
OAT	Pressure Altitude FT X 1000										
C°	0	2	4	6	8	10	12	14	16	18	20
52	98	93	88	.....	.....	.....	.....	.....	.....	.....	.....
40	100	95	91	86	81	76	.....	.....	.....	.....	.....
20	100	100	95	90	85	80	76	71	66	61	.....
0	100	100	100	95	90	85	80	75	70	65	60
−20	100	100	100	100	95	90	85	80	75	70	65
−40	97	93	88	83	79	74	70	65	61	.....	.....

(d) Install a redline at a Vne of 100 KIAS on all airspeed indicators. Remove or obscure any previously installed lines or acrcs above 100 KIAS. If the redline is installed on the instrument glass, also install a slippage mark on the glass and on the isntrument case.

(e) Add the following statement to the Limitations section of the Rotorcraft Flight Manual (RFM): When operating at an airspeed of 60 to 100 KIAS, maintain yaw trim within one ball diameter of the centered position of the turn and bank (slip) indicator, and avoid sudden or large directional control inputs in flight.

(f) Mark the airspeed limitations placard in Figure 1–3 in the RFM to indicate that it has been superseded by this AD, and insert a copy of this AD into the RFM. Also, mark the airspeed indicator in Figure 1–5 of the RFM to indicate a Vne of 100 KIAS.

(g) This AD revises the limitations section of BHTC Model 407 RFM by replacing sheet 1 of Figure 1–3 in the RFM with Figure 1 of this AD, revising sheet 3 of Figure 1–5 of the RFM, and adding an operational limitation for allowable yaw trim and directional control input.

(h) Report any uncommanded right yaw, uncommanded movement of the pedals during flight, or tail rotor blade contact with the tailboom within 24 hours of the occurence to the Manager, Rotorcraft Certification Office, telephone (817) 222–5170. Reporting requirements have been approved by the Office of Management and Budget and assigned OMB control number 2120–0056.

(i) An alternative method of compliance or adjustment of the compliance time that provides an acceptable level of safety may be used if approved by the Manager, Rotorcraft Certification Office, FAA. Operators shall submit their requests through an FAA Principal Maintenance Inspector, who may concur or comment and then send it to the Manager, Rotorcraft Certification Office.

Note 2: Information concerning the existence of approved alternative methods of compliance with this AD, if any, may be obtained from the Rotorcraft Certification Office.

(j) Special flight permits may be issued in accordance with sections 21.197 and 21.199 of the Federal Aviation Regulations (14 CFR 21.197 and 21.199) to operate the helicopter to a location where the requirements of this AD can be accomplished, provided they are for a one-time ferry flight without passengers, and that airspeed during the flight does not exceed 60 KIAS. For helicopters with a left-pedal stop installed in accordance with the TB, the airspeed must not exceed 100 KIAS for a one-time ferry flight without passengers.

(k) The modifications shall be done in accordance with Parts I and II of the Accomplishment Instructions in Bell Helicopter Textron Canada Technical Bulletin 407–98–13, dated December 12, 1998. This incorporation by reference was approved by the Director of the Federal Register in accordance with 5 U.S.C. 552(a) and 1 CFR part 51. Copies may be obtained from Bell Helicopter Textron Canada, 12,800 Rue de l'Avenir, Mirabel, Quebec JON1LO, telephone (800) 463–3036, fax (514) 433–0272. Copies may be inspected at the FAA, Office of the Regional Counsel, Southwest Region, 2601 Meacham Blvd., Room 663, Fort Worth, Texas; or at the Office of the Federal Register, 800 North Capitol Street, NW., suite 700, Washington, DC.

(l) This amendment becomes effective on April 22, 1999, to all persons except those persons to whom it was made immediately effective by Priority Letter AD 99–06–15, issued March 9, 1999, which contained the requirements of this amendment.

Note 3: The subject of this AD is addressed in Transport Canada (Canada) AD CF–98–36R3, dated March 5, 1999.

Issued in Fort Worth, Texas, on March 30, 1999.

Eric Bries,

Acting Manager, Rotorcraft Directorate, Aircraft Certification Service.

[FR Doc. 99–8407 Filed 4–6–99; 8:45 am]

BILLING CODE 4910–13–M

DEPARTMENT OF TRANSPORTATION

Federal Aviation Administration

14 CFR Part 39

[Docket No. 97–NM–04–AD; Amendment 39–11109; AD 99–08–04]

RIN 2120–AA64

Airworthiness Directives; Bombardier Model DHC–8–100, –200, and –300 Series Airplanes

AGENCY: Federal Aviation Administration, DOT.

ACTION: Final rule.

SUMMARY: This amendment adopts a new airworthiness directive (AD), applicable to certain Bombardier Model DHC–8–100, –200, and –300 series airplanes, that requires modification of the flight compartment door; repetitive inspections for wear of the flight compartment door hinges following modification; and repair or replacement of the hinges with new hinges, if necessary. This amendment is prompted by a report that the door lock mechanism of the flight compartment door jammed and could not be opened using the alternate release mechanism. The actions specified by this AD are intended to prevent failure of the alternate release mechanism of the flight

compartment door, which could delay or impede the evacuation of the flightcrew during an emergency. Such failure also could result in the flightcrew not being able to assist passengers in the event of an emergency.

DATES: Effective May 12, 1999.

The incorporation by reference of certain publications listed in the regulations is approved by the Director of the Federal Register as of May 12, 1999.

ADDRESSES: The service information referenced in this AD may be obtained from Bombardier, Inc., Bombardier Regional Aircraft Division, Garratt Boulevard, Downsview, Ontario M3K 1Y5, Canada. This information may be examined at the Federal Aviation Administration (FAA), Transport Airplane Directorate, Rules Docket, 1601 Lind Avenue, SW., Renton, Washington; or at the FAA, Engine and Propeller Directorate, New York Aircraft Certification Office, 10 Fifth Street, Third Floor, Valley Stream, New York; or at the Office of the Federal Register, 800 North Capitol Street, NW., suite 700, Washington, DC.

FOR FURTHER INFORMATION CONTACT: Ezra Sasson, Aerospace Engineer, Systems and Equipment Branch, ANE–172, FAA, New York Aircraft Certification Office, Engine and Propeller Directorate, 10 Fifth Street, Third Floor, Valley Stream, New York 11581; telephone (516) 256–7520; fax (516) 568–2716.

SUPPLEMENTARY INFORMATION: A proposal to amend part 39 of the Federal Aviation Regulations (14 CFR part 39) to include an airworthiness directive (AD) that is applicable to certain Bombardier Model DHC–8–100, –200, and –300 series airplanes was published as a supplemental notice of proposed rulemaking (NPRM) in the **Federal Register** on August 5, 1998 (63 FR 41741). That action proposed to require modification of the flight compartment door; repetitive inspections for wear of the flight compartment door hinges following modification; and repair or replacement of the hinges with new hinges, if necessary.

Comments Received

Interested persons have been afforded an opportunity to participate in the making of this amendment. Due consideration has been given to the comments received.

Support for Proposed Rule

One commenter supports the proposed rule.

Request to Revise Applicability Statement

One commenter requests that the applicability statement of the proposed AD be revised to reflect the effectivity listing specified in Bombardier Service Bulletin S.B. 8–52–39, Revision 'D,' dated February 27, 1998 (i.e., Model DHC–8 series airplanes having serial numbers 003 through 433 inclusive, except serial numbers 269, 408, and 413). The commenter points out that paragraph (a) of the proposed AD requires accomplishment of the modification specified in the subject service bulletin.

The FAA does not concur with the commenter's request. The applicability statement of the original NPRM [which was published in the **Federal Register** on July 11, 1997 (62 FR 37170)] read, ''Model DHC–8–100, –200, and –300 series airplanes having serial numbers 3 through 433 inclusive, excluding serial numbers 269, 408, and 418; certificated in any category.'' The FAA revised the applicability of the supplemental NPRM in consonance with the Canadian airworthiness directive CF–96–20R2, dated July 16, 1997. This revision was made because the supplemental NPRM was revised to add repetitive inspections for wear of the flight compartment door hinges following accomplishment of the required modification. These new repetitive inspections must be accomplished on all affected airplanes having serial numbers 3 and subsequent, regardless of whether the airplane has been modified.

Explanation of Changes Made to Supplemental NPRM

The FAA has revised the final rule to reflect the corporate name change of de Havilland, Inc. to Bombardier, Inc.

Conclusion

After careful review of the available data, including the comments noted above, the FAA has determined that air safety and the public interest require the adoption of the rule with the changes described previously. The FAA has determined that these changes will neither increase the economic burden on any operator nor increase the scope of the AD.

Interim Action

This is considered to be interim action. The manufacturer has advised the FAA that it currently is developing a modification that will eliminate the need for the repetitive inspections for wear of the flight compartment door hinges. Once this modification is developed, approved, and available, the FAA may consider additional rulemaking.

Cost Impact

The FAA estimates that 133 Bombardier Model DHC–8–100, –200, and –300 series airplanes of U.S. registry will be affected by this AD.

It will take approximately 4 work hours per airplane to accomplish the required modification, at an average labor rate of $60 per work hour. Required parts will be provided by the manufacturer at no cost to operators. Based on these figures, the cost impact of the modification required by this AD on U.S. operators is estimated to be $31,920, or $240 per airplane.

It will take approximately 2 work hours per airplane to accomplish the required inspection, at an average labor rate of $60 per work hour. Based on these figures, the cost impact of the inspection required by this AD on U.S. operators is estimated to be $15,960, or $120 per airplane, per inspection cycle.

The cost impact figures discussed above are based on assumptions that no operator has yet accomplished any of the requirements of this AD action, and that no operator would accomplish those actions in the future if this AD were not adopted.

Regulatory Impact

The regulations adopted herein will not have substantial direct effects on the States, on the relationship between the national government and the States, or on the distribution of power and responsibilities among the various levels of government. Therefore, in accordance with Executive Order 12612, it is determined that this final rule does not have sufficient federalism implications to warrant the preparation of a Federalism Assessment.

For the reasons discussed above, I certify that this action (1) is not a ''significant regulatory action'' under Executive Order 12866; (2) is not a ''significant rule'' under DOT Regulatory Policies and Procedures (44 FR 11034, February 26, 1979); and (3) will not have a significant economic impact, positive or negative, on a substantial number of small entities under the criteria of the Regulatory Flexibility Act. A final evaluation has been prepared for this action and it is contained in the Rules Docket. A copy of it may be obtained from the Rules Docket at the location provided under the caption **ADDRESSES**.

List of Subjects in 14 CFR Part 39

Air transportation, Aircraft, Aviation safety, Incorporation by reference, Safety.

Adoption of the Amendment

Accordingly, pursuant to the authority delegated to me by the Administrator, the Federal Aviation Administration amends part 39 of the Federal Aviation Regulations (14 CFR part 39) as follows:

PART 39—AIRWORTHINESS DIRECTIVES

1. The authority citation for part 39 continues to read as follows:

Authority: 49 U.S.C. 106(g), 40113, 44701.

§ 39.13 [Amended]

2. Section 39.13 is amended by adding the following new airworthiness directive:

99–08–04 Bombardier, Inc. (Formerly de Havilland, Inc.): Amendment 39–11109. Docket 97–NM–04–AD.

Applicability: Model DHC–8–100, –200, and –300 series airplanes having serial numbers 3 and subsequent; certificated in any category.

Note 1: This AD applies to each airplane identified in the preceding applicability provision, regardless of whether it has been modified, altered, or repaired in the area subject to the requirements of this AD. For airplanes that have been modified, altered, or repaired so that the performance of the requirements of this AD is affected, the owner/operator must request approval for an alternative method of compliance in accordance with paragraph (c) of this AD. The request should include an assessment of the effect of the modification, alteration, or repair on the unsafe condition addressed by this AD; and, if the unsafe condition has not been eliminated, the request should include specific proposed actions to address it.

Compliance: Required as indicated, unless accomplished previously.

To prevent failure of the alternate release mechanism of the flight compartment door, which could delay or impede the evacuation of the flightcrew and passengers during an emergency, accomplish the following:

(a) Within 90 days after the effective date of this AD, modify the lower hinge assembly and main door latch (Modification 8/2337) of the flight compartment door, in accordance with Bombardier Service Bulletin S.B. 8–52–39, Revision 'D,' dated February 27, 1998.

Note 2: Modification of the flight compartment door accomplished prior to the effective date of this AD in accordance with Bombardier Service Bulletin S.B. 8–52–39, dated August 30, 1996; Revision 'A,' dated October 31, 1996; Revision 'B,' dated July 4, 1997; or Revision 'C,' dated September 1, 1997; is considered acceptable for compliance with the modification required by paragraph (a) of this AD.

(b) Within 800 flight hours after accomplishment of the modification required by paragraph (a) of this AD, inspect the hinge areas around the hinge pin holes of the flight compartment door for wear, in accordance with Bombardier Service Bulletin S.B. 8–52–39, Revision 'C,' dated September 1, 1997, or Revision 'D,' dated February 27, 1998.

(1) If no wear is detected, or if the wear is less than or equal to 0.020 inch in depth, repeat the inspection thereafter at intervals not to exceed 800 flight hours.

(2) If any wear is detected and its dimension around the hinge pin holes is less than 0.050 inch and greater than 0.020 inch in depth, prior to further flight, perform the applicable corrective actions specified in the service bulletin. Repeat the inspection thereafter at intervals not to exceed 800 flight hours.

(3) If any wear is detected and its dimension around the hinge pin holes is greater than or equal to 0.050 inch in depth, prior to further flight, replace the worn hinges with new hinges in accordance with the service bulletin. Repeat the inspection thereafter at intervals not to exceed 800 flight hours.

Alternative Methods of Compliance

(c) An alternative method of compliance or adjustment of the compliance time that provides an acceptable level of safety may be used if approved by the Manager, New York Aircraft Certification Office (ACO), FAA, Engine and Propeller Directorate. Operators shall submit their requests through an appropriate FAA Principal Maintenance Inspector, who may add comments and then send it to the Manager, New York ACO.

Note 3: Information concerning the existence of approved alternative methods of compliance with this AD, if any, may be obtained from the New York ACO.

Special Flight Permits

(d) Special flight permits may be issued in accordance with sections 21.197 and 21.199 of the Federal Aviation Regulations (14 CFR 21.197 and 21.199) to operate the airplane to a location where the requirements of this AD can be accomplished.

Incorporation by Reference

(e) The actions shall be done in accordance with Bombardier Service Bulletin S.B. 8–52–39, Revision 'C,' dated September 1, 1997, and Bombardier Service Bulletin S.B. 8–52–39, Revision 'D,' dated February 27, 1998; as applicable. This incorporation by reference was approved by the Director of the **Federal Register** in accordance with 5 U.S.C. 552(a) and 1 CFR part 51. Copies may be obtained from Bombardier, Inc., Bombardier Regional Aircraft Division, Garratt Boulevard, Downsview, Ontario M3K 1Y5, Canada. Copies may be inspected at the FAA, Transport Airplane Directorate, 1601 Lind Avenue, SW., Renton, Washington; or at the FAA, Engine and Propeller Directorate, New York Aircraft Certification Office, 10 Fifth Street, Third Floor, Valley Stream, New York; or at the Office of the Federal Register, 800 North Capitol Street, NW., suite 700, Washington, DC.

Note 4: The subject of this AD is addressed in Canadian airworthiness directive CF–96–20R2, dated July 16, 1997.

(f) This amendment becomes effective on May 12, 1999.

Issued in Renton, Washington, on March 30, 1999.

Darrell M. Pederson,

Acting Manager, Transport Airplane Directorate, Aircraft Certification Service.

[FR Doc. 99–8328 Filed 4–6–99; 8:45 am]

BILLING CODE 4910–13–P

DEPARTMENT OF TRANSPORTATION

Federal Aviation Administration

14 CFR Part 39

[Docket No. 98–NM–110–AD; Amendment 39–11110; AD 99–08–05]

RIN 2120–AA64

Airworthiness Directives; McDonnell Douglas Model DC–9 and C–9 (Military) Series Airplanes

AGENCY: Federal Aviation Administration, DOT.

ACTION: Final rule.

SUMMARY: This amendment adopts a new airworthiness directive (AD), applicable to certain McDonnell Douglas Model DC–9 and C–9 (military) series airplanes. This amendment requires repetitive inspections to detect fatigue cracking of the fuselage frames and longerons 16R and 17R above the forward lower cargo door; repair, if necessary; and modification of the fuselage frames and longerons, if necessary, and follow-on repetitive inspections to detect fatigue cracking of the skin adjacent to the modification. This amendment is prompted by numerous instances of fatigue cracking of the fuselage frames and longerons. The actions specified by this AD are intended to prevent fatigue cracking of the fuselage frames and longerons 16R and 17R, which could result in reduced structural integrity of the airplane.

DATES: Effective May 12, 1999.

The incorporation by reference of certain publications listed in the regulations is approved by the Director of the Federal Register as of May 12, 1999.

ADDRESSES: The service information referenced in this AD may be obtained from The Boeing Commercial Aircraft Group, Douglas Products Division, 3855 Lakewood Boulevard, Long Beach, California 90846, Attention: Technical Publications Business Administration, Dept. C1–L51 (2–60). This information may be examined at the Federal Aviation Administration (FAA), Transport Airplane Directorate, Rules Docket, 1601 Lind Avenue, SW., Renton, Washington; or at the FAA, Transport Airplane Directorate, Los

Angeles Aircraft Certification Office, 3960 Paramount Boulevard, Lakewood, California; or at the Office of the Federal Register, 800 North Capitol Street, NW., suite 700, Washington, DC.

FOR FURTHER INFORMATION CONTACT: Wahib Mina, Aerospace Engineer, Airframe Branch, ANM–120L, FAA, Transport Airplane Directorate, Los Angeles Aircraft Certification Office, 3960 Paramount Boulevard, Lakewood, California 90712–4137; telephone (562) 627–5324; fax (562) 627–5210.

SUPPLEMENTARY INFORMATION: A proposal to amend part 39 of the Federal Aviation Regulations (14 CFR part 39) to include an airworthiness directive (AD) that is applicable to certain McDonnell Douglas Model DC–9 and C–9 (military) series airplanes was published in the **Federal Register** on April 27, 1998 (63 FR 20548). That action proposed to require repetitive inspections to detect fatigue cracking of the fuselage frames and longerons 16R and 17R above the forward lower cargo door; repair, if necessary; and modification of the fuselage frames and longerons, if necessary, and follow-on repetitive inspections to detect fatigue cracking of the skin adjacent to the modification.

Comments

Interested persons have been afforded an opportunity to participate in the making of this amendment. Due consideration has been given to the comments received.

One commenter indicates that it is not affected by the proposed rule.

Request To Extend Compliance Time

One commenter requests that the FAA extend the proposed compliance time for the initial inspection from 30,000 total landings, or within 3,000 landings after the effective date of this AD (whichever occurs later), to 30,000 total landings, or within 3,500 landings after the effective date of this AD (whichever occurs later). The commenter indicates that the 3,000-landing time limit will cause scheduling problems and will adversely affect operators. The commenter also states that an additional 500 landings would assure a smooth transition into the operators' maintenance program and would not cause additional safety concerns.

The FAA does not concur with the commenter's request. In developing an appropriate compliance time for the initial inspection, the FAA considered not only the degree of urgency associated with addressing the fatigue cracking of the fuselage frames and longerons, but other factors as well. Those factors include the recommendations of the manufacturer, and the practical aspect of accomplishing the initial inspection within an interval of time coinciding with normal scheduled maintenance for the majority of the affected operators. In that regard, the commenter did not provide any data to substantiate that an extension of the compliance time would not compromise safety. In view of those factors, and the amount of time that has already elapsed since issuance of the notice of proposed rulemaking, the FAA has determined that further delay of this inspection is, in general, not appropriate. The FAA may, however, approve a request for an adjustment of the compliance time under the provisions of paragraph (e) of this final rule if data are submitted to substantiate that such an adjustment would provide an equivalent level of safety.

Request To Extend/Eliminate Repetitive Inspection Interval for Modified Airplanes

One commenter requests that the proposed repetitive inspection interval for modified airplanes be extended or eliminated. The commenter states that incorporation of the modification of the fuselage frames and longerons 16R and 17R above the forward cargo door, in accordance with McDonnell Douglas Service Bulletin DC9–53–267, dated October 20, 1997, will improve the fatigue design of the longeron-to-frame attach points, thereby decreasing the probability of frame and longeron cracking that could result in secondary damage to the fuselage skin. The commenter also states that accomplishing the preventative modification should allow the repetitive inspection interval to be increased or should eliminate the need for repetitive inspections.

The FAA does not concur with the commenter's request. The FAA has coordinated this issue with the manufacturer and has determined that the repetitive inspections for modified airplanes are necessary to ensure an adequate level of safety for the transport airplane fleet. The cracking of the fuselage skin adjacent to the modification above the forward lower cargo door is fatigue-related, and the 19,000-landing repetitive inspection intervals were calculated based on fatigue and damage tolerance analysis. Therefore, no change to the final rule is necessary in this regard.

Request Credit for Previously Accomplished Work

Two commenters request credit for prior accomplishment of the proposed initial inspection. The commenters state that documented inspections were accomplished previously in accordance with AD 94–03–01, amendment 39–8807 (59 FR 6538, February 11, 1994), or AD 96–13–03, amendment 39–9671 (61 FR 31009, June 19, 1996), per supplemental inspection document (SID) Report No. L26–008, Section 02, Volume II, Chapter 53–10–01, dated November 1987, using the same inspection method cited in the proposed AD, and in accordance with McDonnell Douglas Service Bulletin DC9–53–267, which was cited as the appropriate source of service information for accomplishment of the initial inspection.

The FAA concurs with the commenters' requests that an initial inspection accomplished prior to the effective date of this AD in accordance with AD 94–03–01 or AD 96–13–03 is acceptable for compliance with the initial inspection requirement in the final rule. However, the FAA notes that operators are always given credit for work accomplished previously if the work is performed in accordance with the existing AD by means of the phrase in the compliance section of the AD that states, ''Required as indicated, unless accomplished previously.'' Therefore, no change to the final rule is necessary in this regard.

Request To Revise Paragraph (b)(1) of the Proposed Rule

One commenter requests that paragraph (b)(1) of the proposed rule be revised to read, ''Option 1. Repeat the visual inspections in accordance with McDonnell Douglas Service Bulletin DC9–53–267, dated October 20, 1997, Paragraph 3.B. (SID Report No. L26–008, Volume II, Chapter 53–10–08, dated July 1997).'' The commenter states that paragraph (b)(1) of the proposal is unclear because the service bulletin does not specify the inspection procedure for the repetitive inspections.

The FAA concurs that clarification should be provided. The intent of paragraph (b)(1) is that operators repeat the visual inspection required by paragraph (a) of the AD. That paragraph requires accomplishment of the visual inspection specified in paragraph 3.B.1. of the Accomplishment Instructions of the service bulletin referenced by the commenter. Additionally, paragraph 3.B.1. of the service bulletin points to the SID report identified by the commenter. For clarification purposes, the FAA has revised paragraph (a) of the final rule to reference paragraph 3.B.1. of the service bulletin. In addition, the FAA has revised paragraph (b)(1) of the final rule to specify that the visual

inspection to be repeated is that required by paragraph (a) of this AD.

Request To Revise Paragraphs (b)(2) and (c) of the Proposed Rule

This same commenter requests that paragraphs (b)(2) and (c) of the proposed rule be revised to define the inspection area and give operators the option to inspect the fuselage skin either internally or externally. The commenter interprets the repetitive inspection requirements of these paragraphs as being limited to the fuselage skin only, as shown in the shaded area in SID Report No. L26–008, Volume II, Chapter 53–10–08, dated July 1997, which does not include the longerons or frames.

The FAA concurs that clarification should be provided. The visual inspection specified in paragraphs (b)(2) and (c) of this AD is required to be accomplished in accordance with the inspection procedure specified in McDonnell Douglas Service Bulletin DC9–53–267, dated October 20, 1997. The intent of that inspection is to detect fatigue cracking of the fuselage skin adjacent to the modification. The only method for such inspection is an internal visual inspection of the inboard side of the fuselage, as specified in SID Report No. L26–008, Volume II, Chapter 53–10–08, dated July 1997 (which is referenced in the service bulletin as the appropriate inspection procedure for accomplishment of the visual inspection). Any crack will initiate at the frames and longerons, and the repair area cannot be seen from the outside. Therefore, the inspection must be accomplished internally to detect cracking of the skin adjacent to the repair.

For clarification purposes, the FAA has revised paragraph (b)(2) of the final rule to reference paragraph 3.B.1.D. of the Accomplishment Instructions of the service bulletin. Paragraph (c) of the final rule also has been revised to reference paragraph 3.B.1.D.(5) of the Accomplishment Instructions of the service bulletin. [Paragraphs 3.B.1.D. and 3.B.1.D.(5) reference the SID specified above for accomplishment of the visual inspection.]

Request To Allow Operator Approval of Certain Repairs

The same commenter requests that the FAA revise paragraphs (b)(2)(ii) and (c)(2) of the proposed AD to permit repairs of any cracked structure found on subsequent inspections to be accomplished by the operators in accordance with FAA-approved data, rather than in accordance data approved by the Manager of the Los Angeles Aircraft Certification Office (ACO), FAA, Transport Airplane Directorate. The commenter states that the findings and repair methods could be submitted to the Los Angeles ACO for subsequent review.

The FAA does not concur with the commenter's request. Access to the type design data is needed for repair data approval, and operators do not have such access. Therefore, the FAA has determined that to maintain an acceptable level of safety for the affected fleet, repair or modification of any cracked structure referenced in paragraphs (b)(2)(ii) and (c)(2) of this AD must be approved by the Manager, Los Angeles ACO. No change to the final rule is necessary in this regard.

Explanation of Changes to Final Rule

Paragraph (d) of the final rule has been revised to provide clarification. The revised paragraph states that accomplishment of the inspection requirements of this AD constitutes terminating action for inspections of Principal Structural Element 53.09.055A (defined in McDonnell Douglas Report No. L26–008, DC–9 Supplemental Inspection Document, Report No. L26–008, Section 2 of Volume III–95, dated September 1995). As a result of this revision, the FAA also has removed NOTE 2 of the proposal; this note is no longer necessary.

Conclusion

After careful review of the available data, including the comments noted above, the FAA has determined that air safety and the public interest require the adoption of the rule with the changes described previously. The FAA has determined that these changes will neither increase the economic burden on any operator nor increase the scope of the AD.

Cost Impact

There are approximately 887 airplanes of the affected design in the worldwide fleet. The FAA estimates that 582 airplanes of U.S. registry will be affected by this AD. It will take approximately 1 work hour per airplane to accomplish the required inspection, at an average labor rate of $60 per work hour. Based on this figure, the cost impact of the inspection required by this AD on U.S. operators is estimated to be $34,920, or $60 per airplane, per inspection cycle.

The cost impact figure discussed above is based on assumptions that no operator has yet accomplished any of the requirements of this AD action, and that no operator would accomplish those actions in the future if this AD were not adopted.

Should an operator be required to accomplish the modification, it would take approximately 4 work hours per airplane to accomplish, at an average labor rate of $60 per work hour. Required parts would cost approximately $860 or $713 per airplane, depending on the service kit purchased. Based on these figures, the cost impact of the modification is estimated to be as high as $1,100 and as low as $953 per airplane.

Should an operator be required to accomplish the follow-on inspection of the fuselage skin, it would take approximately 1 work hour per airplane to accomplish the inspection, at an average labor rate of $60 per work hour. Based on this figure, the cost impact of the follow-on inspection on U.S. operators is estimated to be $60 per airplane, per inspection cycle.

Regulatory Impact

The regulations adopted herein will not have substantial direct effects on the States, on the relationship between the national government and the States, or on the distribution of power and responsibilities among the various levels of government. Therefore, in accordance with Executive Order 12612, it is determined that this final rule does not have sufficient federalism implications to warrant the preparation of a Federalism Assessment.

For the reasons discussed above, I certify that this action (1) is not a ''significant regulatory action'' under Executive Order 12866; (2) is not a ''significant rule'' under DOT Regulatory Policies and Procedures (44 FR 11034, February 26, 1979); and (3) will not have a significant economic impact, positive or negative, on a substantial number of small entities under the criteria of the Regulatory Flexibility Act. A final evaluation has been prepared for this action and it is contained in the Rules Docket. A copy of it may be obtained from the Rules Docket at the location provided under the caption **ADDRESSES.**

List of Subjects in 14 CFR Part 39

Air transportation, Aircraft, Aviation safety, Incorporation by reference, Safety.

Adoption of the Amendment

Accordingly, pursuant to the authority delegated to me by the Administrator, the Federal Aviation Administration amends part 39 of the Federal Aviation Regulations (14 CFR part 39) as follows:

PART 39—AIRWORTHINESS DIRECTIVES

1. The authority citation for part 39 continues to read as follows:

Authority: 49 U.S.C. 106(g), 40113, 44701.

§ 39.13 [Amended]

2. Section 39.13 is amended by adding the following new airworthiness directive:

99–08–05 McDonnell Douglas: Amendment 39–11110. Docket 98–NM–110–AD.

Applicability: Model DC–9 and C–9 (military) series airplanes, as listed in McDonnell Douglas Service Bulletin DC9–53–267, dated October 20, 1997; certificated in any category.

Note 1: This AD applies to each airplane identified in the preceding applicability provision, regardless of whether it has been modified, altered, or repaired in the area subject to the requirements of this AD. For airplanes that have been modified, altered, or repaired so that the performance of the requirements of this AD is affected, the owner/operator must request approval for an alternative method of compliance in accordance with paragraph (e) of this AD. The request should include an assessment of the effect of the modification, alteration, or repair on the unsafe condition addressed by this AD; and, if the unsafe condition has not been eliminated, the request should include specific proposed actions to address it.

Compliance: Required as indicated, unless accomplished previously.

To prevent fatigue cracking of the fuselage frames and longerons 16R and 17R, which could result in reduced structural integrity of the airplane, accomplish the following:

(a) Prior to the accumulation of 30,000 total landings, or within 3,000 landings after the effective date of this AD, whichever occurs later, perform a visual inspection to detect fatigue cracking of the fuselage frames and longerons 16R and 17R above the forward lower cargo door, in accordance with paragraph 3.B.1. of the Accomplishment Instructions of McDonnell Douglas Service Bulletin DC9–53–267, dated October 20, 1997.

(b) *Condition 1.* If no cracking is detected during the inspection required by paragraph (a) of this AD, accomplish the requirements of either paragraph (b)(1) or (b)(2) of this AD, in accordance with McDonnell Douglas Service Bulletin DC9–53–267, dated October 20, 1997.

(1) *Option 1.* Repeat the visual inspection required by paragraph (a) of this AD thereafter at intervals not to exceed 19,000 landings. Or

(2) *Option 2.* Prior to further flight, modify the fuselage frames and longerons 16R and 17R. Prior to the accumulation of 19,000 landings after accomplishment of the modification, perform the visual inspection specified in paragraph 3.B.1.D. of the Accomplishment Instructions of the service bulletin to detect fatigue cracking of the skin adjacent to the modification.

(i) If no cracking is detected, repeat the visual inspection thereafter at intervals not to exceed 19,000 landings.

(ii) If any cracking is detected, prior to further flight, repair in accordance with a method approved by the Manager, Los Angeles Aircraft Certification Office (ACO), FAA, Transport Airplane Directorate.

(c) *Condition 2.* If any cracking is detected during the inspection required by paragraph (a) of this AD, prior to further flight, repair the cracked area and modify the fuselage frames and longerons 16R and 17R; in accordance with McDonnell Douglas Service Bulletin DC9–53–267, dated October 20, 1997. Prior to the accumulation of 19,000 landings after accomplishment of the modification, perform the visual inspection specified in paragraph 3.B.1.D.(5) of the Accomplishment Instructions of the service bulletin to detect fatigue cracking of the skin adjacent to the modification, in accordance with the service bulletin.

(1) If no cracking is detected, repeat the visual inspection thereafter at intervals not to exceed 19,000 landings.

(2) If any cracking is detected, prior to further flight, repair in accordance with a method approved by the Manager, Los Angeles ACO.

(d) Accomplishment of the inspections required by this AD constitutes terminating action for the inspections of Principal Structural Element 53.09.055A (reference McDonnell Douglas Model DC–9 Supplemental Inspection Document, Report No. L26–008, Section 2 of Volume III–95, dated September 1995), as required by AD 96–13–03, amendment 39–9671.

(e) An alternative method of compliance or adjustment of the compliance time that provides an acceptable level of safety may be used if approved by the Manager, Los Angeles ACO. Operators shall submit their requests through an appropriate FAA Principal Maintenance Inspector, who may add comments and then send it to the Manager, Los Angeles ACO.

Note 2: Information concerning the existence of approved alternative methods of compliance with this AD, if any, may be obtained from the Los Angeles ACO.

(f) Special flight permits may be issued in accordance with sections 21.197 and 21.199 of the Federal Aviation Regulations (14 CFR 21.197 and 21.199) to operate the airplane to a location where the requirements of this AD can be accomplished.

(g) Except as provided by paragraphs (b)(2)(ii) and (c)(2) of this AD, the actions shall be done in accordance with McDonnell Douglas Service Bulletin DC9–53–267, dated October 20, 1997. This incorporation by reference was approved by the Director of the **Federal Register** in accordance with 5 U.S.C. 552(a) and 1 CFR part 51. Copies may be obtained from Boeing Commercial Aircraft Group, Douglas Products Division, 3855 Lakewood Boulevard, Long Beach, California 90846, Attention: Technical Publications Business Administration, Dept. C1–L51 (2–60). Copies may be inspected at the FAA, Transport Airplane Directorate, 1601 Lind Avenue, SW., Renton, Washington; or at the FAA, Transport Airplane Directorate, Los Angeles Aircraft Certification Office, 3960 Paramount Boulevard, Lakewood, California; or at the Office of the **Federal Register**, 800 North Capitol Street, NW., suite 700, Washington, DC.

(h) This amendment becomes effective on May 12, 1999.

Issued in Renton, Washington, on March 30, 1999.

Darrell M. Pederson,

Acting Manager, Transport Airplane Directorate, Aircraft Certification Service.

[FR Doc. 99–8329 Filed 4–6–99; 8:45 am]

BILLING CODE 4910–13–U

DEPARTMENT OF TRANSPORTATION

Federal Aviation Administration

14 CFR Part 39

[Docket No. 98–SW–58–AD; Amendment 39–11112; AD 99–08–06]

RIN 2120–AA64

Airworthiness Directives; Eurocopter France Model SA. 3160, SA. 316B, SA. 316C, and SA. 319B Helicopters

AGENCY: Federal Aviation Administration, DOT.

ACTION: Final rule; request for comments.

SUMMARY: This amendment adopts a new airworthiness directive (AD) that is applicable to Eurocopter France Model SA. 3160, SA. 316B, SA. 316C, and SA. 319B helicopters. This action requires inspecting the spar skin and main rotor blade (blade) root reinforcement strip area for a bonding separation, corrosion, or a crack, and replacing the blade, if necessary. This amendment is prompted by the in-flight failure of a blade. The actions specified in this AD are intended to detect a bonding separation, corrosion, or a crack in the area of the blade root reinforcement strip, which could result in failure of the blade and subsequent loss of control of the helicopter.

DATES: Effective April 22, 1999.

The incorporation by reference of certain publications listed in the regulations is approved by the Director of the Federal Register as of April 22, 1999.

Comments for inclusion in the Rules Docket must be received on or before May 7, 1999.

ADDRESSES: Submit comments in triplicate to the Federal Aviation Administration (FAA), Office of the Regional Counsel, Southwest Region, Attention: Rules Docket No. 98–SW–58–AD, 2601 Meacham Blvd., Room 663, Fort Worth, Texas 76137.

The service information referenced in this AD may be obtained from American Eurocopter Corporation, 2701 Forum Drive, Grand Prairie, Texas 75053–4005, telephone (972) 641–3460, fax (972)

641–3527. This information may be examined at the FAA, Office of the Regional Counsel, Southwest Region, 2601 Meacham Blvd., Room 663, Fort Worth, Texas; or at the Office of the Federal Register, 800 North Capitol Street, NW., suite 700, Washington, DC.

FOR FURTHER INFORMATION CONTACT: Richard Monschke, Aerospace Engineer, FAA, Rotorcraft Directorate, Rotorcraft Standards Staff, 2601 Meacham Blvd., Fort Worth, Texas 76137, telephone (817) 222–5116, fax (817) 222–5961.

SUPPLEMENTARY INFORMATION:

Basis for Issuing This AD

The Direction Generale De L'Aviation Civile (DGAC), which is the airworthiness authority for France, recently notified the FAA that an unsafe condition may exist on Model SE. 3160, SA. 316B, SA. 316C, and SA. 319B helicopters. The DGAC advises that, due to the failure of a blade, the spar skin and blade root reinforcement strip area should be checked for separations, cracks, and corrosion.

Eurocopter France has issued Eurocopter SA 316/319 Service Bulletin No. 05.92 Revision No. 1, dated September 28, 1998 (SB). That SB specifies an inspection for bonding separation in the area along the reinforcement strip using a tapping method, and a visual inspection for cracks or corrosion in the blade root area skin using a 3-to 7-power magnifying glass. The DGAC classified this service bulletin as mandatory and issued DGAC AD 98–285–057(A), dated July 15, 1998, and DGAC AD 98–285–057(A) R1, dated December 16, 1998, in order to assure the continued airworthiness of these helicopters in France. The DGAC AD's require the initial inspection within 25 flying hours or 6 months, the Eurocopter SB recommends the initial inspection within 25 hours. The FAA has determined that the initial inspection must be accomplished before further flight to ensure public safety.

These helicopter models are manufactured in France and are type certificated for operation in the United States under the provisions of section 21.29 of the Federal Aviation Regulations (14 CFR 21.29) and the applicable bilateral airworthiness agreement. Pursuant to this bilateral airworthiness agreement, the DGAC has kept the FAA informed of the situation described above. The FAA has examined the findings of the DGAC, reviewed all available information, and determined that AD action is necessary for products of these type designs that are certificated for operation in the United States. Since an unsafe condition has been identified that is likely to exist or develop on other Eurocopter France Model SE. 3160, SA. 316B, SA. 316C, and SA. 319B helicopters of the same type designs registered in the United States, this AD is being issued to detect a bonding separation, corrosion, or a crack in the area of the blade root reinforcement strip, which could result in failure of a blade and subsequent loss of control of the helicopter. This AD requires inspecting each spar skin and blade root reinforcement strip area for a bonding separation, corrosion, or a crack, and replacing the blade if any bonding separation, corrosion, or a crack is found. The actions are required to be accomplished in accordance with the service bulletin described previously. The short compliance time involved is required because the previously described critical unsafe condition can adversely affect the structural integrity of the helicopters. Therefore, the initial inspections are required before further flight, and the repetitive inspections are required at intervals not to exceed 100 hours time-in-service (TIS) or 6 calendar months, whichever occurs first, and this AD must be issued immediately.

Since a situation exists that requires the immediate adoption of this regulation, it is found that notice and opportunity for prior public comment on this AD are not practical, and that good cause exists for making this amendment effective in less than 30 days.

Cost Impact

The FAA estimates that 24 helicopters will be affected by this AD, that it will take approximately 1.5 work hours to do the visual inspection, and 16.0 hours to replace a blade, if necessary, and that the average labor rate is $60 per work hour. Required parts will cost approximately $40,000 per helicopter. Based on these figures, the total cost impact of the AD on U.S. operators is estimated to be $2,160 to conduct one inspection of the fleet, and $40,960 per helicopter to replace one blade (if necessary).

Comments Invited

Although this action is in the form of a final rule that involves requirements affecting flight safety and, thus, was not preceded by notice and an opportunity for public comment, comments are invited on this rule. Interested persons are invited to comment on this rule by submitting such written data, views, or arguments as they may desire. Communications should identify the Rules Docket number and be submitted in triplicate to the address specified under the caption **ADDRESSES.** All communications received on or before the closing date for comments will be considered, and this rule may be amended in light of the comments received. Factual information that supports the commenter's ideas and suggestions is extremely helpful in evaluating the effectiveness of the AD action and determining whether additional rulemaking action would be needed.

Comments are specifically invited on the overall regulatory, economic, environmental, and energy aspects of the rule that might suggest a need to modify the rule. All comments submitted will be available, both before and after the closing date for comments, in the Rules Docket for examination by interested persons. A report that summarizes each FAA-public contact concerned with the substance of this AD will be filed in the Rules Docket.

Commenters wishing the FAA to acknowledge receipt of their comments submitted in response to this rule must submit a self-addressed, stamped postcard on which the following statement is made: ''Comments to Docket No. 98–SW–58–AD.'' The postcard will be date stamped and returned to the commenter.

Regulatory Impact

The regulations adopted herein will not have substantial direct effects on the States, on the relationship between the national government and the States, or on the distribution of power and responsibilities among the various levels of government. Therefore, in accordance with Executive Order 12612, it is determined that this final rule does not have sufficient federalism implications to warrant the preparation of a Federalism Assessment.

The FAA's Determination

The FAA has determined that this regulation is an emergency regulation that must be issued immediately to correct an unsafe condition in aircraft, and that it is not a ''significant regulatory action'' under Executive Order 12866. It has been determined further that this action involves an emergency regulation under DOT Regulatory Policies and Procedures (44 FR 11034, February 26, 1979). If it is determined that this emergency regulation otherwise would be significant under DOT Regulatory Policies and Procedures, a final regulatory evaluation will be prepared and placed in the Rules Docket. A copy of it, if filed, may be obtained from the

Rules Docket at the location provided under the caption **ADDRESSES.**

List of Subjects in 14 CFR Part 39

Air transportation, Aircraft, Aviation safety, Incorporation by reference, Safety. Adoption of the Amendment

Accordingly, pursuant to the authority delegated to me by the Administrator, the Federal Aviation Administration amends part 39 of the Federal Aviation Regulations (14 CFR part 39) as follows:

PART 39—AIRWORTHINESS DIRECTIVES

1. The authority citation for part 39 continues to read as follows:

Authority: 49 U.S.C. 106(g), 40113, 44701.

§ 39.13 [Amended]

2. Section 39.13 is amended by adding a new airworthiness directive to read as follows:

AD 99–08–06 Eurocopter France: Amendment 39–11112. Docket No. 98–SW–58–AD.

Applicability: Model SE. 3160, SA. 316B, SA. 316C, and SA. 319B helicopters, with main rotor blade, part numbers (P/N) 3160S11–10000-all part numbers, 3160S11–30000-all part numbers, 3160S11–35000-all part numbers, 3160S11–40000-all part numbers, 3160S11–45000-all part numbers, 3160S11–50000-all part numbers, and 3160S11–55000-all part numbers, installed, certificated in any category.

Note 1: This AD applies to each helicopter identified in the preceding applicability provision, regardless of whether it has been otherwise modified, altered, or repaired in the area subject to the requirements of this AD. For helicopters that have been modified, altered, or repaired so that the performance of the requirements of this AD is affected, the owner/operator must request approval for an alternative method of compliance in accordance with paragraph (e) of this AD. The request should include an assessment of the effect of the modification, alteration, or repair on the unsafe condition addressed by this AD; and, if the unsafe condition has not been eliminated, the request should include specific proposed actions to address it.

Compliance: Required as indicated, unless accomplished previously.

To detect bonding separation, corrosion, or cracks in the area of a main rotor blade (blade) root reinforcement strip, which could result in failure of the blade and subsequent loss of control of the helicopter, accomplish the following:

(a) Before further flight, and afterwards at intervals not to exceed 100 hours time-in-service or 6 calendar months, whichever occurs first, inspect the spar skin and blade root reinforcement strip area for a bonding separation, corrosion, or a crack in accordance with paragraphs 2.A and 2.B of the Accomplishment Instructions in Eurocopter SA 316/319 Service Bulletin No. 05.92. Revision No. 1, dated September 28, 1998 (SB), except operators are not required to contact Eurocopter if an anamoly is found.

(b) For the hatched areas (1.5 x 50mm and 10 x 100mm) on the upper and lower surfaces of each blade, if bonding separation is found, replace the blade with an airworthy blade prior to further flight (refer to Figure 1 of the SB).

(c) Bonding separation in the non-hatched area (10 x 100mm) of the upper and lower surfaces of each blade is permissible and must be inspected using the tapping method at intervals not to exceed 25 hours time-in-service to monitor possible propagation. When the bonding separation reaches the hatched area, the blade must be replaced with an airworthy blade (refer to Figure 1 of the SB).

(d) Visually inspect for a crack or corrosion on the upper and lower skin in the 100 x 100mm blade root area. If a crack or corrosion is detected, replace the blade with an airworthy blade prior to further flight (refer to Figure 1 of the SB).

(e) An alternative method of compliance or adjustment of the compliance time that provides an acceptable level of safety may be used if approved by the Manager, Standards Staff, Rotorcraft Directorate, FAA. Operators shall submit their requests through an FAA Principal Maintenance Inspector, who may concur or comment and then send it to the Manager, Standards Staff.

Note 2: Information concerning the existence of approved alternative methods of compliance with this AD, if any, may be obtained from the Standards Staff.

(f) Special flight permits will not be issued.

(g) Accomplish the inspections in accordance with Eurocopter SA 316/319 Service Bulletin No. 05.92 Revision No. 1, dated September 28, 1998. This incorporation by reference was approved by the Director of the Federal Register in accordance with 5 U.S.C. 552(a) and 1 CFR part 51. Copies may be obtained from Eurocopter Corporation, 2701 Forum Drive, Grand Prairie, Texas 75053–4005, telephone (972) 641–3460, fax (972) 641–3527. Copies may be inspected at the FAA, Office of the Regional Counsel, Southwest Region, 2601 Meacham Blvd., Room 663, Fort Worth, Texas; or at the Office of the Federal Register, 800 North Capitol Street, NW., suite 700, Washington, DC.

(h) This amendment becomes effective on April 22, 1999.

Note 3: The subject of this AD is addressed in Direction Generale De L'Aviation Civile (France) AD 98–285–057(A), dated July 15, 1998, and AD 98–285–057(A)R1, dated December 16, 1998.

Issued in Fort Worth, Texas, on March 30, 1999.

Eric Bries,

Acting Manager, Rotorcraft Directorate, Aircraft Certification Service.

[FR Doc. 99–8409 Filed 4–6–99; 8:45 am]

BILLING CODE 4910–13–U

DEPARTMENT OF TRANSPORTATION

Federal Aviation Administration

14 CFR Part 39

[Docket No. 97–NM–326–AD; Amendment 39–11105; AD 99–08–01]

RIN 2120–AA64

Airworthiness Directives; Boeing Model 747 Series Airplanes

AGENCY: Federal Aviation Administration, DOT.

ACTION: Final rule.

SUMMARY: This amendment adopts a new airworthiness directive (AD), applicable to certain Boeing Model 747 series airplanes, that requires repetitive detailed visual inspections for corrosion, and repetitive high frequency eddy current (HFEC) inspections for cracks, of the upper link assembly on the number 2 and number 3 engine struts, and corrective actions, if necessary. This amendment is prompted by reports of corrosion and cracks located at the four fasteners that attach to the aft end to the upper link assembly on the number 2 and number 3 engine struts. The actions specified by this AD are intended to prevent failure of the upper link due to cracking or corrosion, subsequent damage to other strut support structure, and in-flight separation of an engine from the airplane.

DATES: Effective May 12, 1999.

The incorporation by reference of certain publications listed in the regulations is approved by the Director of the Federal Register as of May 12, 1999.

ADDRESSES: The service information referenced in this AD may be obtained from Boeing Commercial Airplane Group, P.O. Box 3707, Seattle, Washington 98124–2207. This information may be examined at the Federal Aviation Administration (FAA), Transport Airplane Directorate, Rules Docket, 1601 Lind Avenue, SW., Renton, Washington; or at the Office of the Federal Register, 800 North Capitol Street, NW., suite 700, Washington, DC.

FOR FURTHER INFORMATION CONTACT: Tamara L. Anderson, Aerospace Engineer, Airframe Branch, ANM–120S, FAA, Transport Airplane Directorate, Seattle Aircraft Certification Office, 1601 Lind Avenue, SW., Renton, Washington 98055–4056; telephone (425) 227–2771; fax (425) 227–1181.

SUPPLEMENTARY INFORMATION: A proposal to amend part 39 of the Federal Aviation Regulations (14 CFR part 39) to include an airworthiness directive (AD)

that is applicable to certain Boeing Model 747 series airplanes was published in the **Federal Register** on April 9, 1998 (63 FR 17344). That action proposed to require repetitive detailed visual inspections for corrosion, and repetitive high frequency eddy current (HFEC) inspections for cracks, of the upper link assembly on the number 2 and number 3 engine struts, and corrective actions, if necessary.

Comments Received

Interested persons have been afforded an opportunity to participate in the making of this amendment. Due consideration has been given to the comments received.

Support for Proposed Rule

Two commenters support the proposed rule.

Request to Revise Compliance Time for the Initial Inspections of Certain Airplanes

One commenter, Boeing, notes that Chapter 54–00–01 of the Overhaul Manual (OHM) does not provide repair instructions other than instructions for replacement of the upper link aft fitting or the upper link tube. For airplanes with upper link assemblies that were overhauled in accordance with Chapter 54–00–01 of the OHM, and on which the four aft end attach bolts were installed with sealant, FLAG NOTE 1 of Figure 1 of Boeing Alert Service Bulletin 747–54A2187, dated May 22, 1997 (which is referenced in the proposed AD as the appropriate source of service information for accomplishment of the required inspections) recommends that the initial inspection be accomplished within 6,000 flight cycles or 8 years after the upper link assembly was overhauled.

From this comment, the FAA infers that the commenter is pointing out an error in the referenced alert service bulletin and is requesting that all affected airplanes be inspected at the later of the times specified in paragraphs (a)(2)(i) and (a)(2)(ii) of the proposed AD. The FAA concurs. Because the instructions for the subject overhaul are not available, the FAA has extended the compliance time for those affected airplanes to coincide with the compliance time for all other affected airplanes. The FAA has revised the final rule accordingly.

Request to Delete Note 2

One commenter requests that FAA delete **Note 2** of the notice of proposed rulemaking (NPRM). The commenter points out that **Note 2** removes the operator's ''equivalent procedure'' allowance specified in Boeing Alert Service Bulletin 747–54A2187. The commenter states that most airlines have FAA-approved procedures that are part of the maintenance program. These procedures are developed because each manufacturer has a slightly different procedure for commonly used processes. If operators are forced to use each manufacturer's specific procedure (i.e., Boeing 747 Airplane Maintenance Manual), as specified in **Note 2,** an undue burden would be placed on the operators. In addition, the FAA's Seattle Aircraft Certification Office (ACO) would receive numerous requests for approval of an alternative method of compliance (AMOC), which could delay implementation of the AD and significantly affect operators' ability to respond to AD's that have short compliance times.

The FAA concurs with the commenter's request to delete **Note 2** of the NPRM. The FAA has reconsidered its position, as was stated under the heading ''Differences Between Proposed Rule and Alert Service Bulletin.'' The FAA has determined that procedures ''equivalent'' to those procedures specified in the referenced alert service bulletin for removing or replacing the upper link that are employed by an operator will adequately address the identified unsafe condition and provide an acceptable level of safety. The FAA finds that, if an operator is required to remove or replace the upper link, those corrective actions may be accomplished in accordance with either the applicable chapter of the Boeing 747 Airplane Maintenance Manual (AMM) or an operator's ''equivalent procedure,'' when specified in the referenced alert service bulletin. Therefore, the FAA has removed **Note** 2 of the NPRM from the final rule.

Request to Clarify the Term ''Certain Corrective Actions''

One commenter requests that the FAA clarify whether the term ''certain corrective actions,'' as described under the heading ''Differences Between Proposed Rule and Alert Service Bulletin'' in the proposed AD, applies to repairs as well as removal and installation. The commenter states that the referenced alert service bulletin specifies that an operator's ''equivalent procedure'' may be used for removal or installation of the upper links and does not specify that an operator's ''equivalent procedure'' may be used for repairs of the upper links. In addition, the commenter points out that **Note** 2 of the NPRM states ''* * * and Boeing Alert Service Bulletin 747–54A2187, dated May 22, 1997, specifies that corrective actions may be accomplished in accordance with an operator's 'equivalent procedure.'''

The FAA finds that clarification is necessary. The term ''certain'' in that paragraph refers to some of the required corrective actions. The operator's ''equivalent procedure'' does not apply to the inspection specified in Figure 2 or the repair specified in Figure 3 of the alert service bulletin. The alert service bulletin specifies that ''certain'' corrective actions (i.e., removing, installing, and replacing the upper link) may be accomplished in accordance with an operator's ''equivalent procedure.'' Therefore, the FAA finds that the term ''certain'' is correct in that paragraph. The FAA acknowledges that **Note 2** of NPRM incorrectly reads ''corrective actions,'' rather than ''certain corrective actions.'' However, as discussed previously, **Note 2** is not restated in the final rule, thus, no change to the final rule is necessary.

Conclusion

After careful review of the available data, including the comments noted above, the FAA has determined that air safety and the public interest require the adoption of the rule with the changes previously described. The FAA has determined that these changes will neither increase the economic burden on any operator nor increase the scope of the AD.

Cost Impact

There are approximately 567 Boeing Model 747 series airplanes of the affected design in the worldwide fleet. The FAA estimates that 173 airplanes of U.S. registry will be affected by this AD, that it will take approximately 12 work hours per airplane to accomplish the required inspections, and that the average labor rate is $60 per work hour. Based on these figures, the cost impact of the AD on U.S. operators is estimated to be $124,560, or $720 per airplane, per inspection cycle.

The cost impact figure discussed above is based on assumptions that no operator has yet accomplished any of the requirements of this AD action, and that no operator would accomplish those actions in the future if this AD were not adopted.

Regulatory Impact

The regulations adopted herein will not have substantial direct effects on the States, on the relationship between the national government and the States, or on the distribution of power and responsibilities among the various levels of government. Therefore, in accordance with Executive Order 12612,

it is determined that this final rule does not have sufficient federalism implications to warrant the preparation of a Federalism Assessment.

For the reasons discussed above, I certify that this action (1) is not a ''significant regulatory action'' under Executive Order 12866; (2) is not a ''significant rule'' under DOT Regulatory Policies and Procedures (44 FR 11034, February 26, 1979); and (3) will not have a significant economic impact, positive or negative, on a substantial number of small entities under the criteria of the Regulatory Flexibility Act. A final evaluation has been prepared for this action and it is contained in the Rules Docket. A copy of it may be obtained from the Rules Docket at the location provided under the caption **ADDRESSES.**

List of Subjects in 14 CFR Part 39

Air transportation, Aircraft, Aviation safety, Incorporation by reference, Safety.

Adoption of the Amendment

Accordingly, pursuant to the authority delegated to me by the Administrator, the Federal Aviation Administration amends part 39 of the Federal Aviation Regulations (14 CFR part 39) as follows:

PART 39—AIRWORTHINESS DIRECTIVES

1. The authority citation for part 39 continues to read as follows:

Authority: 49 U.S.C. 106(g), 40113, 44701.

§ 39.13 [Amended]

2. Section 39.13 is amended by adding the following new airworthiness directive:

99–08–01 Boeing: Amendment 39–11105. Docket 97–NM–326–AD.

Applicability: Model 747 series airplanes, line positions 1 through 886 inclusive; equipped with Pratt & Whitney JT9D–3 or –7, or General Electric CF6–45 or –50 engine struts; certificated in any category.

Note 1: This AD applies to each airplane identified in the preceding applicability provision, regardless of whether it has been modified, altered, or repaired in the area subject to the requirements of this AD. For airplanes that have been modified, altered, or repaired so that the performance of the requirements of this AD is affected, the owner/operator must request approval for an alternative method of compliance in accordance with paragraph (e) of this AD. The request should include an assessment of the effect of the modification, alteration, or repair on the unsafe condition addressed by this AD; and, if the unsafe condition has not been eliminated, the request should include specific proposed actions to address it.

Compliance: Required as indicated, unless accomplished previously.

To prevent failure of the upper link due to cracking or corrosion, subsequent damage to other strut support structure, and in-flight separation of an engine from the airplane, accomplish the following:

(a) Perform a detailed visual inspection for corrosion, and a high frequency eddy current (HFEC) inspection for cracks, of the upper link assembly on the number 2 and number 3 engine struts, in accordance with Boeing Alert Service Bulletin 747–54A2187, dated May 22, 1997, at the later of the times specified in paragraphs (a)(1) and (a)(2) of this AD.

(1) Within 6,000 total flight cycles, or 8 years after the date of manufacture of the airplane, whichever occurs first.

(2) Within 600 flight cycles, or 6 months after the effective date of this AD, whichever occurs first.

(b) If no crack or corrosion is detected during any inspection required by paragraph (a) of this AD, repeat the inspections specified in paragraph (a) of this AD, thereafter, at intervals not to exceed 18 months.

(c) If any crack or corrosion is detected during any inspection required by this AD, prior to further flight, accomplish either paragraph (c)(1) or (c)(2) of this AD, in accordance with Boeing Alert Service Bulletin 747–54A2187, dated May 22, 1997. Thereafter, repeat the inspections required by paragraph (a) of this AD, at intervals not to exceed 6,000 flight cycles or 8 years, whichever occurs first.

(1) Repair the upper link within the limits specified in the alert service bulletin, in accordance with Part 2 of the Accomplishment Instructions of the alert service bulletin. (Complete corrosion and crack removal must be achieved within the limits specified in the alert service bulletin.) Or

(2) Replace the upper link with a new upper link assembly, in accordance with Part 3 of the Accomplishment Instructions of the alert service bulletin.

(d) Accomplishment of the modifications required in AD 95–13–07, amendment 39–9287 (for General Electric CF6–45 or –50 engine struts); or AD 95–10–16, amendment 39–9233 (for Pratt & Whitney JT9D–3 or –7 engine struts); constitutes terminating action for the requirements of this AD.

(e) An alternative method of compliance or adjustment of the compliance time that provides an acceptable level of safety may be used if approved by the Manager, Seattle Aircraft Certification Office (ACO), FAA, Transport Airplane Directorate. Operators shall submit their requests through an appropriate FAA Principal Maintenance Inspector, who may add comments and then send it to the Manager, Seattle ACO.

Note 2: Information concerning the existence of approved alternative methods of compliance with this AD, if any, may be obtained from the Seattle ACO.

(f) Special flight permits may be issued in accordance with sections 21.197 and 21.199 of the Federal Aviation Regulations (14 CFR 21.197 and 21.199) to operate the airplane to a location where the requirements of this AD can be accomplished.

(g) Except as provided by paragraph (d) of this AD, the actions shall be done in accordance with Boeing Alert Service Bulletin 747–54A2187, dated May 22, 1997. This incorporation by reference was approved by the Director of the **Federal Register** in accordance with 5 U.S.C. 552(a) and 1 CFR part 51. Copies may be obtained from Boeing Commercial Airplane Group, P.O. Box 3707, Seattle, Washington 98124–2207. Copies may be inspected at the FAA, Transport Airplane Directorate, 1601 Lind Avenue, SW., Renton, Washington; or at the Office of the **Federal Register**, 800 North Capitol Street, NW., suite 700, Washington, DC.

(h) This amendment becomes effective on May 12, 1999.

Issued in Renton, Washington, on March 29, 1999.

Darrell M. Pederson,

Acting Manager, Transport Airplane Directorate, Aircraft Certification Service.

[FR Doc. 99–8309 Filed 4–6–99; 8:45 am]

BILLING CODE 4910–13–P

DEPARTMENT OF TRANSPORTATION

Coast Guard

33 CFR Part 100

[CGD07–99–016]

RIN 2115–AE46

Special Local Regulations: St. Croix International Triathlon, St. Croix, USVI

AGENCY: Coast Guard, DOT.

ACTION: Temporary final rule.

SUMMARY: Temporary special local regulations are being adopted for the Saint Croix International Triathlon. The event will be held from 5 a.m. to 9 a.m. Atlantic Standard Time (AST) on May 2, 1999, in Saint Croix, Christiansted Harbor, USVI. These regulations are needed to provide for the safety of life on navigable waters during the event.

DATES: These regulations become effective at 4:30 a.m. and terminate at 9 a.m. AST on May 2, 1999.

FOR FURTHER INFORMATION CONTACT: Mr. John Reyes at (787) 289–7900, extension 228.

SUPPLEMENTARY INFORMATION:

Background and Purpose

There will be approximately 300 participants swimming a course in Christiansted Harbor, St. Croix on May 2, 1999. The swimmers will be competing with numerous spectator craft in the area, creating an extra or unusual hazard in the navigable waterway. These regulations are required to provide for the safety of life on the navigable waters during the running of the St. Croix International Triathlon.

In accordance with 5 U.S.C. 553, a notice of proposed rulemaking was not published for this regulation and good cause exists for making it effective in less than 30 days after **Federal Register** publication since immediate action is needed to minimize potential danger to the public. The permit was received approximately one month prior to the event taking place.

Regulatory Evaluation

This regulation is not a significant regulatory action under section 3(f) of Executive Order 12866 and does not require an assessment of potential costs and benefits under section 6(a)(f) of that order. The Office of Management and Budget has excepted it from review under that order. It is not significant under the regulatory policies and procedures of the Department of Transportation (DOT) (44 FR 11040; February 26, 1979). The Coast Guard expects the economic impact of this proposal to be so minimal that a full regulatory evaluation under paragraph 10e of the regulated policies and procedures of DOT is unnecessary. The regulated area encompasses Christiansted Harbor, Saint Croix, USVI, entry into which is prohibited for only 4.5 hours early in the morning on the day of the event.

Small Entities

Under the Regulatory Flexibility Act (5 U.S.C. 601 *et seq.*) the Coast Guard must consider whether this rulemaking will have a significant economic impact on a substantial number of small entities. Small entities include small businesses, not-for-profit organizations that are independently owned and operated and are not dominant in their fields, and governmental jurisdictions with populations of less than 50,000.

Therefore, the Coast Guard certifies under 5 U.S.C. 605(b) that this rule will not have a significant economic impact on a substantial number of small entities, as the regulations will only be in effect for approximately 4 hours early in the day in an area with limited commercial traffic.

Collection of Information

This rule contains no collection of information requirements under the Paperwork Reduction Act (44 U.S.C. 3501 *et seq.*).

Federalism

This action has been analyzed in accordance with the principles and criteria contained in Executive Order 12612, and it has been determined that this rulemaking does not have sufficient federalism implications to warrant the preparation of a Federalism Assessment.

Environmental Assessment

The Coast Guard considered the environmental impact of this action consistent with Figure 2–1, paragraph 34(g) Commandant Instruction M16475.1C, and has determined that this action is categorically excluded from any future environmental documentation.

List of Subjects in 33 CFR Part 100

Marine safety, Navigation (water), Reporting and recordkeeping requirements, Waterways.

Temporary Regulations

In consideration of the foregoing, the Coast Guard amends part 100 of Title 33, Code of Federal Regulations as follows:

PART 52—[AMENDED]

1. The authority citation for Part 100 continues to read as follows:

Authority: 33 U.S.C. 1233, 49 CFR 1.46, and 33 CFR 100.35.

2. A temporary § 100.35T–07–016 is added as follows:

§ 100.35T–07–016 St. Croix International Triathlon; Christiansted, St. Croix, USVI.

(a) *Definitions:*

(1) *Regulated Area:* A regulated area is established for the waters North of Saint Croix, USVI in Christiansted Harbor, Kings Wharf beginning at 17–44′51″N, 064–42′20″W, then North East to 17–45′08″N 064–42′02″W, then South West to 17–44′52″N 064–42′02″W and back to origin. All coordinates referenced use Datum: NAD 1983.

(2) *Coast Guard Patrol Commander:* The Coast Guard Patrol Commander is a commissioned, warrant, or petty officer of the Coast Guard who has been designated by Commanding Officer, Greater Antilles Section, San Juan, Puerto Rico.

(b) *Special Local Regulations:*

(1) Entry into the regulated area by other than event participants is prohibited, unless otherwise authorized by the Patrol Commander. Spectator craft are required to remain in a spectator area to be established by the event sponsor Project Saint Croix Association. After termination of the race all vessels may resume normal operation. At the discretion of the Patrol Commander, between scheduled racing events, traffic may be permitted to resume normal operations.

(2) Temporary buoys will be used to delineate the course.

(c) *Dates:* These regulations become effective at 4:30 a.m. and terminated at 9 a.m. AST on May 2, 1999.

Dated: March 29, 1999.

N.T. Saunders,

Rear Admiral, U.S. Coast Guard, Commander, Seventh Coast Guard District.

[FR Doc. 99–8572 Filed 4–6–99; 8:45 am]

BILLING CODE 4910–15–M

DEPARTMENT OF TRANSPORTATION

Coast Guard

33 CFR Part 100

[CGD07–99–017]

RIN 2115–AE46

Special Local Regulations; Air & Sea Show, Fort Lauderdale, FL

AGENCY: Coast Guard, DOT.

ACTION: Temporary final rule.

SUMMARY: The Coast Guard is establishing temporary special local regulations for the City of Fort Lauderdale Air & Sea Show. This event will be held from April 30th, through May 2nd, 1999, and will involve approximately 150 participating aircraft and vessels, and 3,000 spectator craft. The resulting congestion will create an extra or unusual hazard in the navigable waters. These regulations are necessary to provide for the safety of life on navigable waters during the event.

DATES: These regulations are effective from 9 a.m. to 3 p.m. EDT on Friday, April 30, 1999, and from 9 a.m. to 5 p.m. EDT on Saturday and Sunday May 1st and 2nd 1999.

FOR FURTHER INFORMATION CONTACT: LTJG J. Delgado Coast Guard Group Miami, Florida at (305) 535–4409.

SUPPLEMENTARY INFORMATION:

Background and Purpose

The City of Fort Lauderdale Annual Air & Sea Show is a three day event with approximately 130 aircraft and 18 ski boats, jet skis and offshore racing power boats. In addition, various military aircraft, including high performance aircraft, will be operating at high speeds and low altitudes in the area directly above the regulated area. The event will take place in the Atlantic Ocean from Fort Lauderdale beach to one nautical mile offshore, between Oakland Park Boulevard and the 17th Street Causeway. These regulations will prohibit non-participating vessels from entering the regulated area, and directs participants to obey instructions from the patrol commander.

Although a permanent regulation has been published for this event (33 CFR 100.731), a change in the dates of 1999 caused the time period to be outside the dates inclusive in the permanent regulation. Therefore, in accordance with 5 U.S.C. 553, a notice of proposed rulemaking was not published for this regulation and good cause exists for making it effective in less than 30 days after publication in the **Federal Register.** Publishing a NPRM and delaying its effective date would be contrary to national safety interests since prompt action is needed to minimize potential danger to the public. The permit with the changed date was received less than six weeks prior to the event taking place, and the public may be confused as to whether the permanent regulation covers this time period.

Regulatory Evaluation

This rule is not a significant regulatory action under section 3(f) of Executive Order 12866 and does not require an assessment of potential costs and benefits under section 6(a)(3) of that Order. It has been exempted from review by the Office of Management and Budget under that order. It is not significant under the regulatory policies and procedures of the Department of Transportation (DOT) (44 FR 11040; February 26, 1979). The Coast Guard expects the economic impact of this rule to be so minimal that a full Regulatory Evaluation under paragraph 10(e) of the regulatory policies and procedures of DOT is unnecessary. Entry into the regulated area offshore is prohibited for only 6 hours on Friday, and 8 hours on Saturday and Sunday.

Small Entities

Under the Regulatory Flexibility Act (5 U.S.C. 601 *et seq.*), the Coast Guard must consider whether this rule will have a significant economic impact on a substantial number of small entities. ''Small entities'' include small businesses, not-for-profit organizations that are independently owned and operated and are not dominant in their fields, and governmental jurisdictions with populations of less than 50,000.

Therefore, the Coast Guard certifies under 5 U.S.C. 605(b) that this rule would not have a significant economic impact on a substantial number of small entities as the regulations would only be in effect for approximately eight hours each day for three days in an area with limited commercial traffic.

Collection of Information

These regulations contain no collection of information requirements under the Paperwork Reduction Act (44 U.S.C. 3501 *et seq.*).

Federalism

This action has been analyzed in accordance with the principles and criteria contained in Executive Order 12612, and it has been determined that the rulemaking does not have sufficient federalism implications to warrant the preparation of a Federalism Assessment.

Environmental Assessment

The Coast Guard has considered the environmental impact of this action and has determined pursuant to Figure 2–1, paragraph 34(g) of Commandant Instruction M16475.1C, that this action is categorically excluded from further environmental documentation.

List of Subjects in 33 CFR Part 100

Marine safety, Navigation (water), Reporting and recordkeeping requirements, Waterways.

Temporary Regulations

In consideration of the foregoing, the Coast Guard amends Part 100 of Title 33, Code of Federal Regulations, as follows:

PART 100—[AMENDED]

1. The authority citation for Part 100 continues to read as follows:

Authority: 33 U.S.C. 1233, 49 CFR 1.46 and 33 CFR 100.35.

2. A new section 100.35T–07–017 is added to read as follows:

§ 100.35T–07–017 Special Local Regulations; Air & Sea Show, Ft. Lauderdale, FL.

(a) *Definitions:*

(1) *Regulated area.* The following is a regulated area: All waters of the Atlantic Ocean west of a line drawn from 26–10.32N, 080–05.9W to 26–06.36N, 080–05.58W. All coordinates referenced use Datum: NAD 83.

(2) *Patrol Commander.* The Coast Guard Patrol Commander is a commissioned, warrant, or petty officer of the Coast Guard who has been designated by Commander, Coast Guard Group Miami, Florida.

(b) *Special Local Regulations.*

(1) All vessels, with the exception of event participants, are prohibited from entering the regulated area without the specific permission of the patrol commander.

(2) All vessels shall immediately follow any specific instructions given by event patrol craft and exercise extreme caution while operating in or near the regulated area. A succession of not fewer than five short whistle or horn blasts from a patrol vessel will be the signal for any non-participating vessel to stop immediately. The display of an orange distress smoke signal from a patrol vessel will be the signal for any and all vessels to stop immediately.

(3) After the termination of the Air and Sea Show event for each respective day, all vessels may resume normal operations.

(c) *Dates.* These regulations are effective from 9 a.m. to 3 p.m. EDT on Friday, April 30, 1999, and from 9 a.m. to 5 p.m. EDT on Saturday and Sunday May 1st and 2nd 1999.

Dated: March 29, 1999.

N.T. Saunders,

Rear Admiral, U.S. Coast Guard, Commander, Seventh Coast Guard District.

[FR Doc. 99–8573 Filed 4–6–99; 8:45 am]

BILLING CODE 4910–15–M

POSTAL SERVICE

39 CFR Part 111

Domestic Mail Manual Changes To Implement New Labeling List L001 and To Implement Package Reallocation for Periodicals and Standard Mail (A) Flats Placed on Pallets

AGENCY: Postal Service.

ACTION: Final rule.

SUMMARY: This final rule amends the Domestic Mail Manual (DMM) to implement new labeling list L001, 5-Digit Scheme—Periodical Flats and Irregular Parcels and Standard (A) Flats, and to offer mailers an option to use package reallocation to protect the sectional center facility (SCF) pallet level for Periodicals flats and irregular parcels and Standard Mail (A) flats.

EFFECTIVE DATE: July 29, 1999.

FOR FURTHER INFORMATION CONTACT: Cheryl Beller, (202) 268–5166 or Barry Elliott, (202) 268–2731.

SUPPLEMENTARY INFORMATION: On October 29, 1998, the Postal Service published for public comment in the **Federal Register** a proposed rule (63 FR 57970–57996) regarding the implementation of labeling list L001 and package reallocation. The Postal Service also invited comments on the proposed rule from interested parties and accepted comments through December 28, 1998. This final rule contains the DMM standards adopted by the Postal Service after review of the comments that were submitted.

Evaluation of Comments Received

The Postal Service received 11 pieces of correspondence offering comments

on the October 29 proposed rule. Respondents included major mailer associations, individual publishers, printers, service bureaus, and mailers. Nearly all of the commenters were supportive of either one or all of the components of the proposed rule. However, many of the same commenters who voiced support for the proposed rule also conveyed various levels of uncertainty as to how their specific mailings would be impacted by L001 and/or package reallocation. Many of these commenters, therefore, suggested that the Postal Service should implement both L001 and package reallocation optionally as opposed to requiring either or both components. It was felt that implementing both components optionally would allow more time for additional modeling and also provide mailers with the flexibility to determine the most appropriate combination of these options for their specific mailing(s). Based on these comments, as well as other concerns that are mentioned below, the Postal Service has elected to implement both L001 and package reallocation as optional preparation methods with an effective date of July 29, 1999.

Optional Implementation

By implementing both L001 and package reallocation as optional preparation methods, mailers will have the ability to mitigate any of the concerns that were cited during the comment period. Mailers will be able to selectively utilize none, one, or both options as they deem appropriate for their specific mailing. By appropriately tailoring the utilization of these options to their specific mailing, mailers should be able to avoid the undesired results noted in some of the comments. Potential undesirable results that were cited as possibilities depending on the size and/or density of a mailing were: (1) An increase in the number of sacks, (2) an increase in the amount of mail on ADC or BMC pallets (if package reallocation is not used), and (3) an inordinate amount of mail being moved from 5-digit pallets to SCF pallets. Several different alternatives were suggested to alleviate these undesirable results. The alternatives varied from lowering the minimum weight for pallets to creating a transfer hub pallet for Periodicals. These alternatives are no longer entirely relevant given that the Postal Service will allow the mailer to choose the option(s) that are most appropriate for their mailings. Prior to preparing a specific mailing, mailers should remain cognizant of the potential undesirable results and therefore choose to experiment with different combinations of the two options to determine the most appropriate setup.

Other comments also factored into the decision to make both L001 and package reallocation optional. Two commenters expressed concerns about L001 being a required pallet level because some palletized mailings do not use palletization software. In these instances, it was stated that the creation of an L001 pallet, if prepared manually without software, would slow down and/or complicate production. Accordingly, the commenters requested palletized mailings that are not prepared with palletization software be exempt from using L001. Although the Postal Service has decided to implement L001 as an optional preparation method, and thus alleviate this concern temporarily for mailers not using palletization software, it remains likely the Postal Service will require the use of L001 for all palletized Standard (A) and Periodicals flat mailings at some point in the future. For ZIP Codes that are included on L001, it is more appropriate for service and cost reasons for the Postal Service to receive one L001 pallet instead of multiple 5-digit pallets because all of the mail for the zones listed in a given combination are processed at the same facility. The use of L001 facilitates greater presort density, which can yield more ''cross-dock'' pallets for plants and provide more timely service to mailers. Hence, there are operational and service efficiencies to be gained from making L001 a required level of preparation. Mailers that are not currently using palletization software to prepare pallets should therefore begin evaluating how palletization software can be integrated into their production processes in the future, in order to be prepared for a change that would require the usage of L001. Likewise, mailers that are already using palletization software to prepare pallets are strongly encouraged to utilize L001 because this list reflects the way the mail is processed by postal operations.

One commenter expressed concern regarding the requirement that reallocation could be performed only with Presort Accuracy Validation and Evaluation (PAVE)-certified software. The concern pertains to the portion of the mailing community that uses in-house-developed software applications. The commenter remarked that there are marketplace factors which compel commercial software vendors to attempt PAVE certification and that those same factors do not apply to in-house developed software applications. Therefore, the commenter requested that the requirement be amended to ''PAVE certified software or approved documentation.'' The same commenter, as well as two other commenters, also expressed concern about requiring the implementation of labeling list L001 by May 1999. They noted many companies are having to devote computer programmers to the Y2K bug and resources are therefore limited for new development. One of these three commenters also requested that a longer lead time (12 weeks) be provided between the date that software is PAVE-certified and the implementation date. Since both L001 and package reallocation will now be optional, developers of in-house software applications will be able to work on this initiative in a less frenetic manner. As noted earlier, the implementation date for L001 and package reallocation will be July 29, 1999. In the interest of providing the requested lead time between certification and implementation, PAVE testing of L001 and package reallocation will be made available to interested parties beginning in April.

Additional Comments

Communication regarding rate impact—One commenter noted that the Postal Service should emphasize the proposed changes will not have any impact on rates. The comment is noted and the Postal Service reminds mailers that rates for packages of flats on pallets are based on the presort level of the package, not the presort level of the pallet.

Availability of Labeling List L001 in an Electronic Format

—One commenter requested that labeling list L001 should be made available in an electronic format in order to eliminate the need for developers to manually build a table of the information. Moreover, the commenter requested that the list should be made available through a mechanism that would facilitate quicker, if not, real-time updates. Another commenter questioned if the publication of the L001 list in the DMM would eventually result in the 5-digit scheme list, which is used for automation letters, being published in the DMM instead of the current mechanism (AMS City/State file). The same commenter also expressed concern about potential confusion among mailers regarding the L001 list and the 5-digit scheme list for letter-size mail.

The Postal Service recognizes the need for labeling lists, such as L001, to be provided to software developers and mailers in an electronic format. Realistically, making labeling lists

available in an electronic format is the first step in facilitating quicker updates to mailers. An effort has been underway for some time to provide this format, and is currently nearing completion. The USPS/Mailers Technical Advisory Committee (MTAC) Presort Optimization Work Group will be involved in the final stages of this effort to assure that appropriate file formats are provided. The Postal Service does not anticipate mailers having difficulty in discerning the difference between the 5-digit scheme list and L001. The 5-digit scheme list applies only to barcoded letters and L001 applies only to pallets and 5-digit Carrier Routes sacks of Periodicals flats and irregular parcels and Standard (A) flats.

Impact of L001 pallets on delivery units—One commenter expressed concerns regarding non-carrier route pieces being shipped to delivery units only to be returned to a plant because the sortation to carrier route is performed at the plant. The commenter suggested the Postal Service should require mailers to place a CRRT designation on the address label of every piece of mail in order to facilitate manual distribution of this mail by nonscheme-trained clerks at the delivery unit. This would help to alleviate the need to send the mail back to the plant for distribution to carrier route.

The scenario outlined by the commenter is not necessarily an outgrowth from the implementation of L001. There are already instances where a delivery unit receives non-carrier route mail on a 5-digit pallet and the unit must decide how to best handle that mail. In many cases, the amount of non-carrier route pieces is the determining factor in whether the mail is worked at the delivery unit or returned to the plant. Field sites have received guidance on how L001 should be used and how it can benefit them. Based on that information, field sites have listed only the zone combinations they deem appropriate for their specific service area. Operations at Postal Service Headquarters is currently discussing other possible changes to pallet standards in the future that could better remedy this situation and will soon begin discussions with field sites for their input. It should be noted that the destination delivery unit (DDU) rate will be available for mail on a 5-digit scheme pallet prepared using L001 for all carrier route rate Periodicals or Enhanced Carrier Route rate Standard Mail (A) on the pallet when the pallet is deposited at the facility designated by the Postal Service as the location where the carrier cases the mail based on the ''Label To'' Zip Code on the pallet label.

List of Subjects in 39 CFR part 111

Postal Service.

Accordingly, the Postal Service adopts the following amendments to the Domestic Mail Manual, which is incorporated by reference in the Code of Federal Regulations (see 39 CFR part 111).

PART 111—AMENDED]

The authority citation for 39 CFR part 111 continues to read as follows:

Authority: 5 U.S.C. 552 (a); 39 U.S.C 101, 401, 403, 404, 407, 3001–3011, 3201–3219, 3403–3406, 3621, 5001.

Revise the following sections of the Domestic Mail Manual as follows:

E Eligibility

E200 Periodicals

* * * * *

E230 Nonautomation Rates

* * * * *

2.0 CARRIER ROUTE RATES

* * * * *

2.2 Eligibility

* * * * *

[Amend 2.2 by revising 2.2a to add the word ''scheme'' before ''carrier routes sacks'' and add new sentence as follows:]

a. The basic carrier route rate applies to copies in carrier route packages of six or more letter-size pieces each that are sorted to carrier route, 5-digit carrier routes, or 3-digit carrier routes trays; and six or more flat-size pieces or irregular parcel-size pieces each that are sorted to carrier route, 5-digit, or 5-digit scheme carrier routes sacks. (Preparation of 5-digit scheme carrier routes sacks is optional, but, if performed, must be done for all 5-digit scheme destinations.)

* * * * *

E250 Destination Entry

* * * * *

2.0 DDU RATE

2.1 Eligibility

[Amend the second sentence of E250.2.1 by adding the word ''scheme'' before ''carrier routes sacks'' as follows:]

* * * Copies claimed at DDU rates must be part of a carrier route package placed in a carrier route tray or sack, a 5-digit carrier routes tray or sack, or, for flats and irregular parcels, a 5-digit scheme carrier routes sack, under M200, or be palletized under M045, and otherwise eligible for and claimed at a carrier route rate. * * *

* * * * *

E600 Standard Mail

* * * * *

E620 Nonautomation Standard Mail (A) Rates

* * * * *

2.0 ENHANCED CARRIER ROUTE RATES

* * * * *

2.8 Basic Rates

[Amend E630.2.8 by revising 2.8b to add the word ''scheme'' before ''carrier routes sacks'' and add new sentence as follows:]

Basic (nonautomation) carrier route rates apply to each piece that is sorted under M620 into the corresponding qualifying groups:

* * * * *

b. Flat-size pieces in a carrier route package of 10 or more pieces palletized under M045, or placed in a carrier route sack containing at least 125 pieces or 15 pounds of pieces or in a 5-digit or 5-digit scheme carrier routes sack. (Preparation of 5-digit scheme carrier routes sacks is optional, but, if performed, must be done for all 5-digit scheme destinations.)

* * * * *

E650 Destination Entry

E651 Regular, Nonprofit, and Enhanced Carrier Route Standard Mail

* * * * *

7.0 DDU DISCOUNTS

* * * * *

7.2 Eligibility

[Amend E651.7.2 by revising the first sentence to provide DDU rate eligibility for carrier route flats placed in 5-digit scheme carrier routes sacks, as follows:]

Pieces in a mailing that meet the standards in 1.0 through 4.0 and 7.0 are eligible for the DDU rate when deposited at a DDU, addressed for delivery within that facility's service area (carrier routes), and placed in properly prepared and labeled carrier route packages sorted to carrier route trays (letters) or sacks (flats and irregular parcels), 5-digit carrier routes trays (letters) or sacks (flats and irregular parcels), or 5-digit scheme carrier routes sacks (flats) under M600, or palletized under M045, and otherwise eligible for and claimed at a carrier route rate. * * *

* * * * *

L Labeling Lists

L000 General Use

[Add labeling list L001 as follows:]

L001 5-Digit Scheme—Periodicals Flats and Irregular Parcels and Standard (A) Flats

When 5-digit scheme sort is used for Periodicals flats and irregular parcels packages and Standard Mail (A) flats packages, mail for the 5-digit ZIP Codes shown in Column A must be combined on pallets or in carrier routes sacks labeled to the corresponding destination shown in Column B.

BILLING CODE 7710–12–P

Column A Destination ZIP Codes	Column B Label Container To
00901, 02	SAN JUAN PR 00901
00907, 08	SAN JUAN PR 00907
00909, 10	SAN JUAN PR 00909
00911-14	SAN JUAN PR 00911
00915, 16	SAN JUAN PR 00915
00917-19	SAN JUAN PR 00917
00920-22, 68	SAN JUAN PR 00920
00923, 24, 29	SAN JUAN PR 00923
00925, 27, 28	SAN JUAN PR 00925
00958, 60	BAYAMON PR 00960
00956, 57, 59, 61	BAYAMON PR 00961
00962, 63, 65	CATANO PR 00962
00966, 67, 69, 70	GUAYNABO PR 00970
00979, 82-88	CAROLINA PR 00982
01013, 14, 20-22	CHICOPEE MA 01013
01432, 33	AYER MA 01432
01701-05	FRAMINGHAM MA 01701
01830-35	HAVERHILL MA 01830
01840-45	LAWRENCE MA 01840
01850-54	LOWELL MA 01850
01950-52	NEWBURYPORT MA 01950
02108, 33	BOSTON MA 02108
02109, 13	BOSTON MA 02109
02110-12	BOSTON MA 02110
02118-20	ROXBURY MA 02118
02121, 25	DORCHESTER MA 02121
02140-42, 63	CAMBRIDGE MA 02140
02143-45	SOMERVILLE MA 02143
02153, 55, 56	MEDFORD MA 02155
02420, 21	LEXINGTON MA 02420
02445-47	BROOKLINE MA 02446
02451-54	WALTHAM MA 02451
02471, 72, 77	WATERTOWN MA 02472
02474-76	ARLINGTON MA 02474
02478, 79	BELMONT MA 02478
02457, 81, 82	WELLESLEY HILLS MA 02481
02540, 41	FALMOUTH MA 02540
02664, 73	SOUTH YARMOUTH MA 02664
02721, 22	FALL RIVER MA 02721
02725, 26	SOMERSET MA 02726
02741, 42	NEW BEDFORD MA 02741
02779, 80	TAUNTON MA 02780
02860, 62	PAWTUCKET RI 02860
02879, 80, 83	WAKEFIELD RI 02880
02895, 96	WOONSOCKET RI 02895
03051, 52	HUDSON NH 03051
03060, 61	NASHUA NH 03060
03062, 63	NASHUA NH 03062
03108, 11	MANCHESTER NH 03108
03246, 47	LACONIA NH 03246
03301-06	CONCORD NH 03301
03431, 35	KEENE NH 03431
03801-04	PORTSMOUTH NH 03801
03820, 22	DOVER NH 03820
03842, 43	HAMPTON NH 03842
03839, 66-68	ROCHESTER NH 03867
04101, 08	PORTLAND ME 04101
05301-04	BRATTLEBORO VT 05301
05401-07	BURLINGTON VT 05401
05601-04, 09, 20, 33	MONTPELIER VT 05601

Column A Destination ZIP Codes	Column B Label Container To
05701, 02	RUTLAND VT 05701
06050-53	NEW BRITAIN CT 06050
06701-06, 08, 10, 12, 16, 20-26, 49	WATERBURY CT 06701
06777, 93, 94	WASHINGTON DEPOT CT 06777
06810-13, 16, 17	DANBURY CT 06810
06830, 31, 36	GREENWICH CT 06830
06850-60	NORWALK CT 06850
06880, 81	WESTPORT CT 06880
07004, 06, 07	CALDWELL NJ 07006
07011-15	CLIFTON NJ 07015
07017-19	EAST ORANGE NJ 07019
07024, 25	FORT LEE NJ 07024
07031, 32	KEARNY NJ 07032
07042-44	MONTCLAIR NJ 07042
07050-52	ORANGE NJ 07050
07055-57	PASSAIC NJ 07055
07059-63	PLAINFIELD NJ 07061
07065-67	RAHWAY NJ 07065
07070-75	RUTHERFORD NJ 07070
07090-92	WESTFIELD NJ 07091
07094, 96	SECAUCUS NJ 07094
07401, 17, 23, 46, 58, 63, 81, 95, 98	ALLENDALE NJ 07401
07450-52	RIDGEWOOD NJ 07450
07470, 74, 77	WAYNE NJ 07470
07601-08	HACKENSACK NJ 07606
07631, 32	ENGLEWOOD NJ 07631
07701, 02, 04	REDBANK NJ 07701
07801-03, 06, 69	DOVER NJ 07801
07901, 02	SUMMIT NJ 07901
07960-63	MORRISTOWN NJ 07960
08002, 03, 34	CHERRY HILL NJ 08034
08540-44	PRINCETON NJ 08540
08723, 24	BRICK NJ 08723
08753-57	TOMS RIVER NJ 08753
08817-20, 37	EDISON NJ 08817
08854, 55	PISCATAWAY NJ 08854
08861-63	PERTH AMBOY NJ 08861
08871, 72	SAYREVILLE NJ 08872
08873, 75	SOMERSET NJ 08873
08878, 79	SOUTH AMBOY 08879
10017, 44	GRAND CENTRAL NY 10017
10022, 55	FDR NY 10022
10520, 21	CROTON ON HUDSON NY 10520
10550-53, 57-59	MOUNT VERNON NY 10550
10570-72	PLEASANTVILLE NY 10570
10580, 81	RYE NY 10580
10940, 41, 43	MIDDLETOWN NY 10940
10951, 52	MONSEY NY 10952
10994, 95	WEST NYACK NY 10994
10996, 97	WEST POINT NY 10996
11001, 02, 04, 05	FLORAL PARK NY 11001
11020-27	GREAT NECK NY 11022
11040-44	NEW HYDE PARK NY 11040
11050-56	PORT WASHINGTON NY 11050
11553, 55, 56	UNIONDALE NY 11553
11580-83	VALLEY STREAM NY 11580
11568, 90	WESTBURY NY 11590
11702, 03, 07	BABYLON NY 11702

Column A Destination ZIP Codes	Column B Label Container To
11776, 77	PORT JEFFERSON NY 11776
12180, 83	TROY NY 12180
12550-53	NEWBURGH NY 12550
12601, 02	POUGHKEEPSIE NY 12601
12603, 04	ARLINGTON NY 12603
12801, 03, 04	GLENS FALLS NY 12801
12901, 03	PLATTSBURGH NY 12901
13021, 22	AUBURN NY 13021
13088-90	LIVERPOOL NY 13088
13440, 41	ROME NY 13440
14020, 21	BATAVIA NY 14020
14094, 95	LOCKPORT NY 14094
14120, 21	NIORTH TONAWANDA NY 14120
14150, 51	TONAWANDA NY 14150
14201, 02	BUFFALO NY 14202
14203-05	BUFFALO NY 14203
14208, 09	BUFFALO NY 14209
14301-05	NIAGARA FALLS NY 14302
14850-53, 82	ITHACA NY 14850
14901-05	ELMIRA NY 14901
17001, 11	CAMP HILL PA 17011
17042, 46	LEBANON PA 17042
17701, 03	WILLIAMSPORT PA 17701
18015-18	BETHLEHEM PA 18015
18040, 42-45	EASTON PA 18042
18504, 08, 12, 17-19	SCRANTON PA 18504
18501, 03, 05, 07, 09, 10, 15	SCRANTON PA 18505
18640-44	PITTSTON PA 18640
18701, 02	WILKES BARRE PA 18701
18704, 08, 09	WILKES BARRE PA 18704
18705-07	WILKES BARRE PA 18705
18954, 66	SOUTHHAMPTON PA 18966
19013-16, 22	CHESTER PA 19013
19020, 21	BENSALEM PA 19020
19025, 34	FORT WASHINGTON PA 19025
19043, 98	HOLMES PA 19043
19047-49, 53	LANGHORNE PA 19047
19054-59	LEVITTOWN PA 19054
19037, 63-65, 86, 91	MEDIA PA 19063
19080, 87-89	WAYNE PA 19080
19082-84	UPPER DARBY PA 19082
19301, 12, 33	PAOLI PA 19301
19380-83	WEST CHESTER PA 19380
19401, 04	NORRISTOWN PA 19401
19403, 07-09	EAGLEVILLE PA 19403
19405, 06	KING OF PRUSSIA PA 19406
19464, 65	POTTSTOWN PA 19464
19702, 11-18, 25, 26	NEWARK DE 19711
20110-12	MANASSAS VA 20110
20120, 21	CENTERVILLE VA 20120
20186, 87	WARRENTON VA 20186
20703-06, 37, 38, 40, 41, 81-85, 87-89	CALVERT DDC MD 20782
22191-94	WOODBRIDGE VA 22191
22401-08, 12	FREDERICKSBURG VA 22401
22554, 55	STAFFORD VA 22554
22801, 07	HARRISONBURG VA 22801
22901-11	CHARLOTTESVILLE VA 22901
23058-60	GLEN ALLEN VA 23060

Column A Destination ZIP Codes	Column B Label Container To
23111, 16	MECHANICSVILLE VA 23111
23112, 13	MIDLOTHIAN VA 23112
23185-87	WILLIAMSBURG VA 23185
23229, 55, 94	RICHMOND VA 23229
23233, 38, 42	RICHMOND VA 23233
23234, 37	RICHMOND VA 23234
23235, 36	RICHMOND VA 23235
23430, 31	SMITHFIELD VA 23430
23432-39	SUFFOLK VA 23434
23690-93	GRAFTON VA 23692
23801, 03-06	PETERSBURG VA 23801
23832, 38	CHESTERFIELD VA 23832
23901, 09, 43	FARMVILLE VA 23901
24001-10	ROANOKE VA 24001
24011, 13, 16	ROANOKE VA 24011
24022-38, 40, 42-45, 48	ROANOKE VA 24022
24060-63	BLACKSBURG VA 24060
24068, 73	CHRISTIANSBURG VA 24068
24112-15	MARTINSVILLE VA 24112
24141-43	RADFORD VA 24141
24401, 02	STAUNTON VA 24401
24505-22, 24-39, 44-50, 52-71, 73-91, 93-99	LYNCHBURG VA 24505
24540-43	DANVILLE VA 24541
25301, 11	CHARLESTON WV 25301
25302, 12	CHARLESTON WV 25302
25303, 09	CHARLESTON WV 25303
25304, 15	CHARLESTON WV 25304
25701, 03-05, 71-79	HUNTINGTON WV 25701
25706-29	HUNTINGTON WV 25706
26101-06	PARKERSBURG WV 26101
26301, 02	CLARKSBURG WV 26301
26501-08	MORGANTOWN WV 26505
26554, 55	FAIRMONT WV 26554
27101, 15	WINSTON SALEM NC 27101
27103, 04, 14	WINSTON SALEM NC 27103
27105, 06, 16	WINSTON SALEM NC 27106
27107, 17, 27	WINSTON SALEM NC 27107
27203, 04	ASHEBORO NC 27203
27215-17, 20	BURLINGTON NC 27215
27260-65	HIGH POINT NC 27260
27284, 85	KERNERSVILLE NC 27284
27288, 89	EDEN NC 27288
27292-95	LEXINGTON NC 27292
27320-23	REIDSVILLE NC 27320
27330, 31	SANFORD NC 27330
27360, 61	THOMASVILLE NC 27360
27401-03, 11, 20, 35, 55	GREENSBORO NC 27401
27405, 15	GREENSBORO NC 27405
27406, 16	GREENSBORO NC 27406
27408, 09, 10	GREENSBORO NC 27408
27511-13, 19	CARY NC 27511
27514, 15, 99	CHAPEL HILL NC 27514
27530-34	GOLDSBORO NC 27530
27587, 88	WAKE FOREST NC 27587
27604, 16	RALEIGH NC 27604
27608, 09	RALEIGH NC 27609
27603, 10	RALEIGH NC 27610
27612, 13	RALEIGH NC 27612
27614, 15	RALEIGH NC 27615

Column A Destination ZIP Codes	Column B Label Container To
27701, 03	DURHAM NC 27701
27705, 15	DURHAM NC 27705
27707, 13, 17	DURHAM NC 27707
27709, 11	DURHAM NC 27709
27712, 22	DURHAM NC 27712
27801-04	ROCKY MOUNT NC 27801
27833-36, 58	GREENVILLE NC 27833
27893-96	WILSON NC 27893
27906-09	ELIZABETH CITY NC 27909
28001, 02	ALBEMARLE NC 28001
28025, 26	CONCORD NC 28025
28052, 53	GASTONIA NC 28052
28054-56	GASTONIA NC 28054
28070, 78	HUNTERSVILLE NC 28078
28081-83	KANNAPOLIS NC 28081
28092, 93	LINCOLNTON NC 28092
28104-06	MATTHEWS NC 28105
28110-12	MONROE NC 28110
28144-47	SALISBURY NC 28144
28150-52	SHELBY NC 28150
28301-09, 11, 14	FAYETTEVILLE NC 28301
28328, 29	CLINTON NC 28328
28334, 35	DUNN NC 28334
28352, 53	LAURINBURG NC 28352
28358-60	LUMBERTON NC 28358
28370-74	PINEHURST NC 28370
28387, 88	SOUTHERN PINES NC 28387
28401-12	WILMINGTON NC 28401
28459, 67-70	SHALLOTTE NC 28459
28461, 65	SOUTHPORT NC 28461
28501-04	KINSTON NC 28501
28540, 45	JACKSONVILLE NC 28540
28543, 44, 46	JACKSONVILLE NC 28546
28560-64	NEW BERN NC 28560
28601-03	HICKORY NC 28601
28607, 08	BOONE NC 28607
28633, 45	LENOIR NC 28645
28655, 80	MORGANTON NC 28655
28625, 77, 87	STATESVILLE NC 28677
28734, 44	FRANKLIN NC 28734
28739, 91-93	HENDERSONVILLE NC 28739
28738, 85, 86	WAYNESVILLE NC 28786
28804, 14	ASHEVILLE NC 28804
28806, 16	ASHEVILLE NC 28806
29071-73	LEXINGTON SC 29072
29115-18	ORANGEBURG SC 29115
29150-54	SUMTER SC 29150
29169-72	WEST COLUMBIA SC 29169
29301-03, 06, 07	SPARTANBURG SC 29301
29304, 05, 16, 18, 19	SPARTANBURG SC 29304
29340-42	GAFFNEY SC 29340
29401, 03, 13	CHARLESTON SC 29401
29405, 15	CHARLESTON SC 29405
29406, 19	CHARLESTON SC 29406
29407, 17	CHARLESTON SC 29407
29412, 22	CHARLESTON SC 29412
29414, 16	CHARLESTON SC 29414
29418, 20, 23	CHARLESTON SC 29418
29455, 57	JOHNS ISLAND SC 29455
29434, 61	MONCKS CORNER SC 29461

Column A Destination ZIP Codes	Column B Label Container To
29464-66	MOUNT PLEASANT SC 29464
29483, 84	SUMMERVILLE SC 29483
29485, 56	SUMMERVILLE SC 29485
29526-28	CONWAY SC 29526
29532, 40	DARLINGTON SC 29532
29550, 51	HARTSVILLE SC 29550
29572, 75, 77, 78, 87	MYRTLE BEACH SC 29577
29582, 97, 98	N MYRTLE BEACH SC 29582
29601, 05, 09	GREENVILLE SC 29601
29602, 13, 14, 18, 19	GREENVILLE SC 29602
29603, 04, 08, 12	GREENVILLE SC 29603
29606, 07	GREENVILLE SC 29606
29610, 11, 17	GREENVILLE SC 29610
29615, 16	GREENVILLE SC 29615
29621-26	ANDERSON SC 29621
29631-34	CLEMSON SC 29631
29640-42	EASLEY SC 29640
29646-49	GREENWOOD SC 29646
29650-52	GREER SC 29650
29672, 78, 79	SENECA SC 29672
29680, 81	SIMPSONVILLE SC 29680
29715, 16	FORT MILL SC 29715
29720, 21	LANCASTER SC 29720
29730, 31, 33, 34	ROCK HILL SC 29730
29901-04, 06	BEAUFORT SC 29901
30004, 09	ALPHARETTA GA 30004
30005, 22	ALPHARETTA GA 30005
30012, 13, 94	CONYERS GA 30012
30030, 31, 33, 89	DECATUR GA 30030
30034-37	DECATUR GA 30034
30038, 58	LITHONIA GA 30038
30028, 40, 41	CUMMING GA 30040
30043, 46	LAWRENCEVILLE GA 30043
30042, 44, 45	LAWRENCEVILLE GA 30044
30047, 48	LILBURN GA 30047
30008, 60	MARIETTA GA 30060
30071, 93	NORCROSS GA 30071
30075, 77	ROSWELL GA 30075
30080-82	SMYRNA GA 30080
30083, 86, 88	STONE MOUNTAIN GA 30083
30084, 85	TUCKER GA 30084
30010, 92	NORCROSS GA 30092
30101, 02	ACWORTH GA 30101
30120, 21	CARTERSVILLE GA 30120
30188, 89	WOODSTOCK GA 30188
30701, 03	CALHOUN GA 30701
30719-22	DALTON GA 30720
31201, 11, 17	MACON GA 31201
31206, 16	MACON GA 31206
31210, 20	MACON GA 31210
31310, 13-15	HINESVILLE GA 31310
31401, 15	SAVANNAH GA 31401
31403, 05	SAVANNAH GA 31403
31404, 14	SAVANNAH GA 31404
31406, 11, 16	SAVANNAH GA 31406
31407, 08, 18	SAVANNAH GA 31407
31419, 20	SAVANNAH GA 31419
31701, 05	ALBANY GA 31701
31702, 03, 06, 08	ALBANY GA 31702
31709, 68, 92, 94	AMERICUS GA 31709

Column A Destination ZIP Codes	Column B Label Container To
31901, 02	COLUMBUS GA 31901
31903, 05	COLUMBUS GA 31903
32034, 35	FERNANDINA BEACH FL 32034
32024, 25, 55, 56	LAKE CITY FL 32055
32060, 64	LIVE OAK FL 32060
32050, 68	MIDDLEBURG FL 32068
32065, 67, 73	ORANGE PARK FL 32073
32084-86, 92, 95	SAINT AUGUSTINE FL 32084
32041, 97	YULEE FL 32097
32205, 20, 21, 36, 54	JACKSONVILLE FL 32205
32207, 47	JACKSONVILLE FL 32207
32208, 19	JACKSONVILLE FL 32208
32210, 38	JACKSONVILLE FL 32210
32211, 39, 77	JACKSONVILLE FL 32211
32216, 45, 46	JACKSONVILLE FL 32216
32217, 23, 37, 41, 57, 59	JACKSONVILLE FL 32217
32218, 26	JACKSONVILLE FL 32218
32225, 35	JACKSONVILLE FL 32225
32224, 40, 50	JACKSONVILLE FL 32250
32256, 58	JACKSONVILLE FL 32256
32301, 11	TALLAHASSEE FL 32301
32303, 15	TALLAHASSEE FL 32303
32304, 10, 16	TALLAHASSEE FL 32304
32308, 17	TALLAHASSEE FL 32308
32401, 02	PANAMA CITY FL 32401
32403, 04	PANAMA CITY FL 32404
32405, 06, 09	PANAMA CITY FL 32405
32407, 08, 13, 17	PANAMA CITY FL 32407
32502, 73-76, 89-98	PENSACOLA FL 32502
32501, 03, 13	PENSACOLA FL 32503
32504, 14, 24, 34	PENSACOLA FL 32504
32506, 16, 26	PENSACOLA FL 32506
32507, 08	PENSACOLA FL 32507
32522, 23	PENSACOLA FL 32522
32536, 38, 39	CRESTVIEW FL 32536
32540, 41	DESTIN FL 32540
32547-49	FT WALTON BEACH FL 32547
32561, 62, 66	GULF BREEZE FL 32561
32544, 69	MARY ESTHER FL 32569
32570-72, 83	MILTON FL 32570
32578, 88	NICEVILLE FL 32578
32615, 16	ALACHUA FL 32615
32626, 44	CHIEFLAND FL 32626
32643, 55	HIGH SPRINGS FL 32643
32701, 15	ALTAMONTE SPRINGS FL 32701
32707, 18, 30	CASSLEBERRY FL 32707
32708, 19	WINTER SPRINGS FL 32708
32703, 04, 12	APOPKA FL 32712
32714, 16	ALTAMONTE SPRINGS FL 32714
32720-24	DELAND FL 32720
32725, 28	DELTONA FL 32725
32726, 27, 36	EUSTIS FL 32726
32738, 39	DELTONA FL 32738
32746, 95	LAKE MARY FL 32746
32750, 52	LONGWOOD FL 32750
32751, 94	MAITLAND FL 32751
32756, 57	MT DORA FL 32757
32763, 74	ORANGE CITY FL 32763
32762, 65, 66	OVIEDO FL 32765
32771-73	SANFORD FL 32771

Column A Destination ZIP Codes	Column B Label Container To
32779, 91	LONGWOOD FL 32779
32780-83, 96	TITUSVILLE FL 32780
32789, 90	WINTER PARK FL 32789
32801, 02	ORLANDO FL 32801
32804, 54	ORLANDO FL 32804
32805, 55	ORLANDO FL 32805
32806, 56	ORLANDO FL 32806
32807, 57	ORLANDO FL 32807
32808, 18, 68	ORLANDO FL 32808
32809, 39, 59	ORLANDO FL 32809
32810, 60	ORLANDO FL 32810
32811, 35, 61	ORLANDO FL 32811
32812, 27, 32	ORLANDO FL 32812
32817, 67	ORLANDO FL 32817
32819, 21, 36, 69	ORLANDO FL 32819
32820, 26, 28, 29, 31, 33, 34, 78	ORLANDO FL 32820
32824, 37, 77	ORLANDO FL 32824
32901, 02, 19	MELBOURNE FL 32901
32904, 12	WEST MELBOURNE FL 32904
32905, 06	PALM BAY FL 32905
32907-09, 11	PALM BAY WEST FL 32907
32922-24, 26, 27	COCOA FL 32922
32925, 37	PATRICK AFB FL 32925
32931, 32	COCOA BEACH FL 32931
32934, 40, 41	EAU GALLIE FL 32934
32952-54	MERRITT ISLAND FL 32952
32955, 56	ROCKLEDGE FL 32955
32958, 76, 78	SEBASTIAN FL 32958
32960, 63	VERO BEACH FL 32960
32962, 65, 68	VERO BEACH FL 32962
32966, 67, 69	VERO BEACH FL 32966
33008, 09	HALLANDALE FL 33009
33010, 11	HIALEAH FL 33010
33015, 17	SOUTH FLORIDA FL 33015
33002, 18	SOUTH FLORIDA FL 33018
33019, 20, 22	SOUTH FLORIDA FL 33020
33021, 81	SOUTH FLORIDA FL 33021
33023, 83	SOUTH FLORIDA FL 33023
33024, 84	SOUTH FLORIDA FL 33024
33030, 33, 90	HOMESTEAD FL 33030
33031, 32, 39, 92	SOUTH FLORIDA 33032
33034, 35	HOMESTEAD FL 33034
33040, 41, 45	KEY WEST FL 33040
33055, 56	SOUTH FLORIDA FL 33055
33060, 69	SOUTH FLORIDA FL 33060
33061, 62, 72	SOUTH FLORIDA FL 33061
33063, 93	SOUTH FLORIDA FL 33063
33065, 75	SOUTH FLORIDA FL 33065
33067, 73, 76, 97	SOUTH FLORIDA FL 33067
33071, 77	SOUTH FLORIDA FL 33071
33128, 32, 36	MIAMI FL 33128
33129, 30	MIAMI FL 33129
33127, 37	MIAMI FL 33137
33109, 39	MIAMI FL 33139
33167, 68	MIAMI FL 33167
33174, 84	MIAMI FL 33174
33175, 85	MIAMI FL 33175
33186, 96	MIAMI FL 33186
33301, 94	FT LAUDERDALE FL 33301

Column A Destination ZIP Codes	Column B Label Container To
33324, 88	FT LAUDERDALE FL 33324
33404, 19	WEST PALM BEACH FL 33404
33407, 12	WEST PALM BEACH FL 33407
33411, 21	WEST PALM BEACH FL 33411
33413, 15	WEST PALM BEACH FL 33413
33417, 22	WEST PALM BEACH FL 33417
33424, 25, 74	BOYNTON BEACH FL 33424
33427, 29, 81	BOCA RATON FL 33427
33428, 97	BOCA RATON FL 33428
33441, 43	DEERFIELD BEACH FL 33441
33444, 47	DELRAY BEACH FL 33444
33445, 82	DELRAY BEACH FL 33445
33446, 48, 84	DELRAY BEACH FL 33446
33455, 75	HOBE SOUND FL 33455
33461, 66	LAKE WORTH FL 33461
33462, 65	LAKE WORTH FL 33462
33454, 63	LAKE WORTH FL 33463
33468, 77, 78	JUPITER FL 33468
33509, 11	BRANDON FL 33511
33523, 25, 26	DADE CITY FL 33525
33539-41, 43, 44	ZEPHYRHILLS FL 33540
33548, 49	LUTZ FL 33549
33564-67	PLANT CITY FL 33566
33568, 69	RIVERVIEW FL 33569
33570, 72, 73	RUSKIN FL 33570
33583, 84	SEFFNER FL 33584
33594, 95	VALRICO FL 33594
33602, 72	TAMPA FL 33602
33603, 73	TAMPA FL 33603
33604, 74	TAMPA FL 33604
33605, 75	TAMPA FL 33605
33610, 80	TAMPA FL 33610
33611, 81	TAMPA FL 33611
33612, 82	TAMPA FL 33612
33614, 84	TAMPA FL 33614
33615, 85	TAMPA FL 33615
33616, 86	TAMPA FL 33616
33618, 25, 88	TAMPA FL 33618
33624, 26	TAMPA FL 33624
33637, 87	TAMPA FL 33637
33701, 31	ST PETERSBURG FL 33701
33702, 16, 42	ST PETERSBURG FL 33702
33703, 32	ST PETERSBURG FL 33703
33704, 34	ST PETERSBURG FL 33704
33705, 12, 15, 39	ST PETERSBURG FL 33705
33706, 36, 40, 41	ST PETERSBURG FL 33706
33707, 11, 37, 47	ST PETERSBURG FL 33707
33708, 38	ST PETERSBURG FL 33708
33709, 10, 43	ST.PETERSBURG FL 33709
33713, 14, 84	ST PETERSBURG FL 33713
33730, 33	ST PETERSBURG FL 33730
33755, 57, 69	CLEARWATER FL 33755
33759, 60, 62, 64	CLEARWATER FL 33762
33761, 63, 65	CLEARWATER FL 33765
33770, 71, 74, 79	LARGO FL 33770
33772, 73, 75-78	SEMINOLE FL 33772
33780-82	PINELLAS PARK FL 33781
33785, 86	INDIAN ROCKS BEACH FL 33785
33801-03, 15	LAKELAND FL 33801
33805, 09, 10	LAKELAND FL 33805

Column A Destination ZIP Codes	Column B Label Container To
33807, 11, 13	LAKELAND FL 33813
33830, 31	BARTOW FL 33830
33844, 45	HAINES CITY FL 33844
33853-56, 59, 67	LAKE WALES FL 33853
33870-72	SEBRING FL 33870
33880, 82, 83	WINTER HAVEN FL 33880
33881, 84, 85	LAKELAND FL 33881
33901, 16	FT MYERS FL 33901
33903, 17	FT MYERS FL 33903
33905, 94	FT MYERS FL 33905
33909, 93	CAPE CORAL FL 33909
33912, 13	FT MYERS FL 33912
33914, 91	CAPE CORAL FL 33914
33931, 32	FT MYERS BEACH FL 33931
33935, 75	LABELLE FL 33935
33936, 70-72	LEHIGH ACRES FL 33936
33948, 53, 81	PT CHARLOTTE FL 33948
33950, 55, 82	PUNTA GORDA FL 33950
33952, 54	PT CHARLOTTE FL 33952
33980, 83	PUNTA GORDA FL 33980
34104, 09	NAPLES FL 34104
34105, 10	NAPLES FL 34105
34112, 13	NAPLES FL 34112
34116, 17, 19, 20	NAPLES FL 34116
34134, 35	BONITA SPRINGS FL 34134
34142, 43	IMMOKALEE FL 34142
34201-04	BRADENTON FL 34203
34205, 06, 08	BRADENTON FL 34206
34207, 10, 81, 82	BRADENTON FL 34207
34209, 80	BRADENTON FL 34209
34217, 18	BRADENTON BEACH FL 34217
34220, 21	PALMETTO FL 34220
34223, 24, 95	ENGLEWOOD FL 34223
34230, 34-37, 43	SARASOTA FL 34230
34231, 38, 41, 42, 76	SARASOTA FL 34231
34232, 33, 40	SARASOTA FL 34232
34239, 77	SARASOTA FL 34239
34265, 66	ARCADIA FL 34265
34274, 75	NOKOMIS FL 34274
34284, 85, 92	VENICE FL 34285
34286, 87	NORTH PORT FL 34287
34420, 21	BELLVIEW FL 34420
34423, 28, 29	CRYSTAL RIVER FL 34428
34430-34	DUNNELLON FL 34430
34446-48	HOMOSASSA SPRINGS FL 34446
34450-53	INVERNESS FL 34450
34460, 61	LECANTO FL 34460
34464, 65	BEVERLY HILLS FL 34464
34470, 75, 78, 79	OCALA FL 34470
34471, 72, 80, 83	OCALA FL 34471
34473, 74, 76, 77, 81, 82	OCALA FL 34473
34488, 89	SILVER SPRINGS FL 34488
34491, 92	SUMMERFIELD FL 34491
34601-05, 13, 14	BROOKSVILLE FL 34601
34606-09, 11	SPRING HILL FL 34606
34652-56	NEW PORT RICHEY FL 34652
34667, 69, 74	HUDSON FL 34667
34668, 73	PORT RICHEY FL 34668
34682-85	PALM HARBOR FL 34683
34688, 89	TARPON SPRINGS FL 34689

Column A Destination ZIP Codes	Column B Label Container To
34697, 98	DUNEDIN FL 34698
34711, 12	CLERMONT FL 34711
34741, 42, 46, 47	KISSIMMEE FL 34741
34743-45, 58, 59	KISSIMMEE FL 34743
34748, 49, 88, 89	LEESBURG FL 34748
34769-73	ST CLOUD FL 34769
34777, 78, 87	WINTER GARDEN FL 34777
34945, 81, 82, 86-88	FT PIERCE FL 34945
34946, 47, 49, 51	FT PIERCE FL 34946
34948, 54, 79, 85	FT PIERCE FL 34948
34957, 58	JENSEN BEACH FL 34957
34972-74	OKEECHOBEE FL 34972
34990, 91	PALM CITY FL 34990
35010, 11	ALEXANDER CITY AL 35010
35045, 46	CLANTON AL 35045
35150, 51	SYLACAUGA AL 35150
35160, 61	TALLADEGA AL 35160
35475, 76	NORTHPORT AL 35476
35501-04	JASPER AL 35501
35956, 57	BOAZ AL 35957
36027, 72	EUFAULA AL 36027
36066-68	PRATTVILLE AL 36067
36079, 81, 82	TROY AL 36081
36092, 93	WETUMPKA AL 36092
36330, 31	ENTERPRISE AL 36330
36360, 61	OZARK AL 36360
36426, 27	BREWTON AL 36426
36460, 61	MONROEVILLE AL 36460
36701-03	SELMA AL 36701
36801-04	OPELIKA AL 36801
36830-32, 49	AUBURN AL 36830
36867-70	PHENIX CITY AL 36867
37011, 13	ANTIOCH TN 37011
37024, 27	BRENTWOOD TN 37024
37040, 41	CLARKSVILLE TN 37040
37055, 56	DICKSON TN 37055
37064, 65, 67-69	FRANKLIN TN 37064
37070, 72	GOODLETTSVILLE TN 37070
37075, 77	HENDERSONVILLE TN 37075
37087, 88, 90	LEBANON TN 37087
37110, 11	MCMINNVILLE TN 37110
37115, 16	MADISON TN 37115
37121, 22	MT JULIET TN 37121
37127, 30, 33	MURFREESBORO TN 37127
37128, 29	MURFREESBORO TN 37128
37160-62	SHELBYVILLE TN 37160
37201, 19	NASHVILLE TN 37201
37204, 20	NASHVILLE TN 37204
37206, 13	NASHVILLE TN 37206
37208, 18, 28	NASHVILLE TN 37208
37210, 24	NASHVILLE TN 37210
37211, 22	NASHVILLE TN 37211
37229, 30	NASHVILLE TN 37229
37303, 71	ATHENS TN 37303
37311, 12, 20, 64	CLEVELAND TN 37311
37317, 46	COPPERHILL TN 37317
37349, 55	MANCHESTER TN 37355
37304, 73	SALE CREEK TN 37373
37319, 79, 84	SODDY DAISY TN 37379
37337, 81, 95	SPRING CITY TN 37381

Column A Destination ZIP Codes	Column B Label Container To
37358, 85	TELLICO PLAINS TN 37385
37402, 03, 08, 50, 99	CHATTANOOGA TN 37402
37409, 10, 19	CHATTANOOGA TN 37409
37411, 14	CHATTANOOGA TN 37411
37601, 05	JOHNSON CITY TN 37601
37602, 04	JOHNSON CITY TN 37604
37616, 41	CHUCKEY TN 37641
37642, 45	CHURCH HILL TN 37642
37643, 44	ELIZABETHTON TN 37643
37660, 62, 65	KINGSPORT TN 37660
37716, 17	CLINTON TN 37716
37743-45	GREENEVILLE TN 37743
37771, 72	LENOIR CITY TN 37771
37801-04	MARYVILLE TN 37801
37813-16	MORRISTOWN TN 37814
37821, 22	NEWPORT TN 37821
37824, 25, 79	NEW TAZWELL TN 37825
37830, 31	OAK RIDGE TN 37830
37862-64, 68, 76	SEVIERVILLE TN 37862
37902, 16, 29, 99	KNOXVILLE TN 37902
37914, 24	KNOXVILLE TN 37914
37917, 27	KNOXVILLE TN 37917
37918, 28, 38	KNOXVILLE TN 37918
37919, 39	KNOXVILLE TN 37919
37920, 40, 98	KNOXVILLE TN 37920
37923, 32	KNOXVILLE TN 37923
37950, 90, 95, 97	KNOXVILLE TN 37950
38017, 27	COLLIERVILLE TN 38017
38018, 88	CORDOVA TN 38018
38024, 25	DYERSBURG TN 38024
38053-55	MILLINGTON TN 38053
38101, 40, 42, 43, 45, 47, 48, 50, 51, 59, 61, 66, 69, 94, 97	MEMPHIS TN 38101
38103, 05, 46, 63, 65, 73	MEMPHIS TN 38103
38104, 74	MEMPHIS TN 38104
38106, 26, 36	MEMPHIS TN 38106
38108, 12	MEMPHIS TN 38108
38109, 90	MEMPHIS TN 38109
38111, 52	MEMPHIS TN 38111
38115, 75, 88, 93	MEMPHIS TN 38115
38116, 31, 32, 86	MEMPHIS TN 38116
38117, 37, 57, 77	MEMPHIS TN 38117
38118, 81	MEMPHIS TN 38118
38119, 20, 87	MEMPHIS TN 38119
38125, 41	MEMPHIS TN 38125
38127, 67	MEMPHIS TN 38127
38128, 68	MEMPHIS TN 38128
38133, 35	MEMPHIS TN 38133
38134, 84	MEMPHIS TN 38134
38138, 39, 83	MEMPHIS TN 38138
38301, 02, 08	JACKSON TN 38301
38303, 05, 14	JACKSON TN 38305
38501-03, 05, 06	COOKEVILLE TN 38501
38555, 57, 58	CROSSVILLE TN 38555
38634, 35	HOLLY SPRINGS MS 38634
38701-05	GREENVILLE MS 38701
38801-03	TUPELO MS 38801
38901, 02	GRENADA MS 38901
38930, 35	GREENWOOD MS 38930

Column A Destination ZIP Codes	Column B Label Container To
39042, 43	BRANDON MS 39042
39056, 58, 60	CLINTON MS 39056
39110, 30	MADISON MS 39110
39120-22	NATCHEZ MS 39120
39157, 58	RIDGELAND MS 39157
39180-83	VICKSBURG MS 39180
39201, 02	JACKSON MS 39201
39204, 84	JACKSON MS 39204
39206, 86	JACKSON MS 39206
39208, 18, 88	JACKSON MS 39208
39209, 89	JACKSON MS 39209
39212, 72, 82	JACKSON MS 39212
39213, 83	JACKSON MS 39213
39401-07	HATTIESBURG MS 39401
39440-43	LAUREL MS 39440
39520-22, 29	BAY ST LOUIS MS 39520
39564-66	OCEAN SPRINGS MS 39564
39601-03	BROOKHAVEN MS 39601
39648, 49	MC COMB MS 39648
39701-05, 10	COLUMBUS MS 39701
39759, 60	STARKVILLE MS 39759
40201-04, 08, 10, 70	LOUISVILLE KY 40202
40206, 07, 57, 80	LOUISVILLE KY 40207
40211, 12, 51	LOUISVILLE KY 40211
40205, 13, 18	LOUISVILLE KY 40213
40209, 14	LOUISVILLE KY 40214
40216, 56	LOUISVILLE KY 40216
40219, 29, 59	LOUISVILLE KY 40219
40220, 50	LOUISVILLE KY 40220
40222, 41, 42, 52	LOUISVILLE KY 40222
40231-33, 90, 92, 94, 96-98	LOUISVILLE KY 40232
40223, 43, 53	LOUISVILLE KY 40243
40258, 66, 68, 81, 83, 84	LOUISVILLE KY 40258
40269, 99	LOUISVILLE KY 40299
40502, 17	LEXINGTON KY 40502
40503, 14	LEXINGTON KY 40503
40504, 10, 13	LEXINGTON KY 40504
40505, 09, 16	LEXINGTON KY 40505
40506, 26, 36, 46	LEXINGTON KY 40506
40507, 08	LEXINGTON KY 40507
40511, 15	LEXINGTON KY 40511
40601-04	FRANKFORT KY 40601
40701, 02	CORBIN KY 40701
40741-45	LONDON KY 40741
41011, 12, 14-19	COVINGTON KY 41011
41071-74	NEWPORT KY 41071
41075, 76	NEWPORT KY 41075
41101, 02, 05, 14	ASHLAND KY 41101
41301, 42	CAMPTON KY 41301
41501, 02	PIKEVILLE KY 41501
41701, 02	HAZARD KY 41701
42001, 03	PADUCAH KY 42001
42101, 04, 22	BOWLING GREEN KY 42101
42134, 35	FRANKLIN KY 42134
42141, 42	GLASGOW KY 42141
42153, 64	SCOTTSVILLE KY 42164
42240, 41	HOPKINSVILLE KY 42240
42419, 20	HENDERSON KY 42420
42501-03	SOMERSET KY 42501

Column A Destination ZIP Codes	Column B Label Container To
42701, 02	ELIZABETHTOWN KY 42701
43016, 17	DUBLIN OH 43016
43040, 41	MARYSVILLE OH 43040
43055, 56, 58, 93	NEWARK OH 43055
43007, 67	RAYMOND OH 43067
43081, 82, 86	WESTERVILLE OH 43081
43135, 52, 56	LAURELVILLE OH 43135
43150, 63	RUSHVILLE OH 43150
43206, 17	COLUMBUS OH 43206
43222, 23	COLUMBUS OH 43222
43234, 35, 40	COLUMBUS OH 43234
43301, 02	MARION OH 43301
43314, 35	CALEDONIA OH 43314
43330, 59	WHARTON OH 43359
43701, 02, 21	ZANESVILLE OH 43702
43725, 50	CAMBRIDGE OH 43725
43754, 86	LEWISVILLE OH 43754
43736, 73	QUAKER CITY OH 43773
43803, 40	STONE CREEK OH 43840
44221, 22	CUYAHOGA FALLS OH 44221
44240, 41	KENT OH 44240
44256-58	MEDINA OH 44256
44281, 82	WADSWORTH OH 44281
44646, 47	MASSILLON OH 44646
45011, 12, 20-26	HAMILTON OH 45011
45014, 18	FAIRFIELD OH 45014
45042-44	MIDDLETOWN OH 45042
45202, 10	CINCINNATI OH 45202
45203, 04, 14	CINCINNATI OH 45203
45206, 26	CINCINNATI OH 45206
45207, 12	CINCINNATI OH 45212
45216, 17, 32	CINCINNATI OH 45217
45219, 20	CINCINNATI OH 45219
45223, 25	CINCINNATI OH 45223
45209, 27	CINCINNATI OH 45227
45228, 30	CINCINNATI OH 45230
45213, 36	CINCINNATI OH 45236
45233, 38	CINCINNATI OH 45238
45218, 40, 46	CINCINNATI OH 45240
45244, 45	CINCINNATI OH 45245
45239, 47, 51-53	CINCINNATI OH 45251
45502-04	SPRINGFIELD OH 45502
45505, 06	SPRINGFIELD OH 45505
45613, 83	BEAVER OH 45613
45622, 54	NEW PLYMOUTH OH 45654
45662, 63	PORTSMOUTH OH 45662
45710, 76	ALBANY OH 45710
45711, 77	AMESVILLE OH 45711
45712, 29	BARLOW OH 45712
45715, 21	BEVERLY OH 45715
45717, 64	NELSONVILLE OH 45764
45734, 67, 89	NEW MATAMORAS OH 45767
45786, 87	WARTERFORD OH 45786
46011, 14-16, 18	ANDERSON IN 46011
46012, 13, 17	ANDERSON IN 46012
46032, 33	CARMEL IN 46032
46142, 43	GREENWOOD IN 46142
46202, 23, 25	INDIANAPOLIS IN 46202
46204, 82, 44	INDIANAPOLIS IN 46204
46205, 20, 30	INDIANAPOLIS IN 46205

Column A Destination ZIP Codes	Column B Label Container To
46206, 07, 83, 85, 98	INDIANAPOLIS IN 46206
46214, 53, 54	INDIANAPOLIS IN 46214
46217, 27, 37, 47	INDIANAPOLIS IN 46217
46221, 31	INDIANAPOLIS IN 46221
46235, 36	INDIANAPOLIS IN 46236
46239, 59	INDIANAPLOIS IN 46239
46240, 60, 80, 90	INDIANAPOLIS IN 46240
46241, 42, 51	INDIANAPOLIS IN 46241
46250, 56	INDIANAPOLIS IN 46250
46268, 78	INDIANAPOLIS IN 46268
46307, 08	CROWN POINT IN 46307
46320, 25, 27	HAMMOND IN 46320
46350, 52	LA PORTE IN 46350
46360, 61	MICHIGAN CITY IN 46360
46408, 09	GARY IN 46408
46410, 11	MERRILLVILLE IN 46410
46516, 17	ELKHART IN 46516
46526-28	GOSHEN IN 46526
46544-46	MISHAWAKA IN 46544
46580, 81	WARSAW IN 46580
46601, 17	SOUTH BEND IN 46601
46613, 14, 80	SOUTH BEND IN 46613
46616, 19	SOUTH BEND IN 46616
46635, 37, 60	SOUTH BEND IN 46635
46901-04	KOKOMO IN 46901
46952, 53	MARION IN 46952
47129-32	JEFFERSONVILLE IN 47130
47150, 51	NEW ALBANY IN 47150
47629, 30	NEWBURGH IN 47630
47670, 71	PRINCETON IN 47670
47701-06, 21, 22, 27, 30-37, 39-41, 44, 47, 50	EVANSVILLE IN 47701
47708, 13	EVANSVILLE IN 47708
47711, 24	EVANSVILLE IN 47711
47712, 19, 20	EVANSVILLE IN 47712
47714, 28	EVANSVILLE IN 47714
47715, 16	EVANSVILLE IN 47715
47801-08	TERRE HAUTE IN 47801
47901-07, 96	LAFAYETTE IN 47901
48001, 28	ALGONAC MI 48001
48009, 12	BIRMINGHAM MI 48009
48025, 34, 37, 75, 76, 86	SOUTHFIELD MI 48025
48026, 66	FRASER MI 48026
48035, 36, 43, 45, 46	CLINTON TOWNSHIP MI 48035
48038, 42, 44	CLINTON TOWNSHIP MI 48038
48040, 49, 59-61, 74	MARYSVILLE MI 48040
48047, 51	NEW BALTIMORE MI 48047
48048, 50	NEW HAVEN MI 48048
48062-64	RICHMOND MI 48062
48065, 96	ROMEO MI 48065
48067-70, 72, 73	ROYAL OAK MI 48067
48080-82	SAINT CLAIR SHORES MI 48080
48007, 83, 84, 98, 99	TROY MI 48083
48015, 89-93	WARREN MI 48089
48094, 95	WASHINGTON MI 48094
48103, 06, 08, 09	ANN ARBOR MI 48103
48105, 13	GREEN ROAD STATION MI 48105
48104, 07	LIBERTY STATION MI 48107
48111, 12	BELLEVILLE MI 48111
48114, 16	BRIGHTON MI 48116

Column A Destination ZIP Codes	Column B Label Container To
48120-22, 26	DEARBORN MI 48120
48123-25	DEARBORN ANNEX MI 48124
48135, 36	GARDEN CITY MI 48135
48150, 51, 54	LIVONIA MI 48150
48152, 53	GREENMEAD STA MI 48152
48161, 62	MONROE MI 48161
48167, 75	NORTHVILLE MI 48167
48174, 80	TAYLOR MI 48180
48185, 86	WESTLAND MI 48185
48187, 88	CANTON MI 48188
48192, 95	WYANDOTTE MI 48192
48197, 98	YPSILANTI MI 48197
48201, 02, 06, 11	NORTHEND STATION MI 48202
48214, 15	JEFFERSON STATION MI 48214
48208, 16, 26, 43	GRAND SHELBY STA MI 48216
48217, 18, 29	RIVER ROUGE MI 48218
48220, 21	COLLEGE PARK STA MI 48221
48225, 30	FOX CREEK STATION MI 48225
48239, 40	REDFORD MI 48239
48302, 04	BLOOMFIELD HILLS MI 48302
48306-09	ROCHESTER HILLS MI 48306
48310-14	STERLING HTS MI 48310
48315-18	SHELBY TWP MI 48315
48320, 28, 40-43	KEEGO HARBOR MI 48320
48321, 26	AUBURN HILLS MI 48321
48322-25	WEST BLOOMFIELD MI 48322
48327, 29, 83, 86	WATERFORD ANNEX MI 48327
48331, 33, 34	FARMINGTON HILLS MI 48331
48332, 35, 36	FARMINGTON MI 48332
48346-48	CLARKSTON MI 48346
48356, 57	HIGHLAND MI 48356
48359-63	LAKE ORION MI 48359
48370, 71	OXFORD MI 48370
48374, 77	NOVI CR ANNEX MI 48374
48375, 76	NOVI MI 48375
48380-82	MILFORD MI 48380
48390, 91	WALLED LAKE MI 48390
48504, 31-33	NORTHWEST ANNEX MI 48504
48506, 09	NORTHEAST ANNEX MI 48509
48519, 29	SOUTHEAST ANNEX MI 48519
48801, 02	ALMA MI 48801
48804, 58, 59	MOUNT PLEASANT MI 48804
48805, 64	OKEMOS MI 48805
48823-26	EAST LANSING MI 48823
48843, 44	HOWELL MI 48843
48906, 17	DELTA BRANCH MI 48906
48910-12	SOUTHWEST ANNEX MI 48910
49002, 24	PORTAGE MI 49002
49006, 07	KALAMAZOO MI 49006
49014, 17	BATTLE CREEK MI 49014
49015, 16	BATTLE CREEK MI 49015
49022, 23	BENTON HARBOR MI 49022
49068, 69	MARSHALL MI 49068
49103, 04	BERRIEN SPRINGS MI 49103
49120, 21	NILES MI 49120
49504, 14, 44	GRAND RAPIDS MI 49504
49505, 15, 25	GRAND RAPIDS MI 49505
49506, 16	GRAND RAPIDS MI 49506
49507, 10	GRAND RAPIDS MI 49507
49508, 18, 48	GRAND RAPIDS MI 49508

Column A Destination ZIP Codes	Column B Label Container To
49801, 02	IRON MOUNTAIN MI 49801
50310, 94	DES MOINES IA 50310
50320, 21	DES MOINES IA 50320
50322, 23	DES MOINES IA 50322
50701-04, 06, 07	WATERLOO IA 50701
51101, 02, 05, 10, 11	SIOUX CITY IA 51101
51103, 09	SIOUX CITY IA 51103
51104, 08	SIOUX CITY IA 51104
51106, 07	SIOUX CITY IA 51106
51501-03	COUNCIL BLUFFS IA 51501
52401, 03	CEDAR RAPIDS IA 52401
52402, 10, 11	CEDAR RAPIDS IA 52402
52404, 05, 08, 09	CEDAR RAPIDS IA 52408
52801-03, 05, 08	DAVENPORT IA 52801
52804, 06, 07, 09	NORTHWEST STATION IA 52802
53005, 08, 45	BROOKFIELD WI 53005
53022, 77	GERMANTOWN WI 53022
53051, 52	MENOMONEE FALLS WI 53051
53081-83	SHEBOYGAN WI 53081
53090, 95	WEST BEND WI 53090
53092, 97	MEQUON WI 53092
53094, 98	WATERTOWN WI 53094
53140-44, 58	KENOSHA WI 53140
53146, 51	NEW BERLIN WI 53146
53186-89	WAUKESHA WI 53186
53202, 03	MILWAUKEE WI 53202
53205, 33	MILWAUKEE WI 53205
53207, 35	MILWAUKEE WI 53207
53213, 26	MILWAUKEE WI 53213
53215, 19, 34	MILWAUKEE WI 53215
53220, 28	MILWAUKEE WI 53220
53222, 25	MILWAUKEE WI 53222
53223, 24	MILWAUKEE WI 53223
53401, 03, 07	RACINE WI 53401
53402, 04	RACINE WI 53404
53405, 06, 08	RACINE WI 53406
53545-47	JANESVILLE WI 53545
53704, 14, 16	MADISON WI 53704
53711, 17, 19, 44	MADISON WI 53711
53713, 15	MADISON WI 53713
54220, 21	MANITOWOC WI 54220
54301, 02, 11	GREEN BAY WI 54301
54303, 04, 13	GREEN BAY WI 54303
54401-03	WAUSAU WI 54401
54494, 95	WISCONSIN RAPIDS WI 54494
54901-04	OSHKOSH WI 54901
54911-15	APPLETON WI 54911
54935-37	FOND DU LAC WI 54935
54956, 57	NEENAH WI 54956
55104, 14	ST PAUL MN 55104
55110, 15	ST PAUL MN 55110
55103, 17	ST PAUL MN 55117
55120, 21	ST PAUL MN 55120
55305, 45, 91	MINNETONKA MN 55305
55311, 69	MAPLE GROVE MN 55311
55317, 18, 31, 86	CHANHASSEN MN 55317
55306, 37	BURNSVILLE MN 55337
55344, 46, 47	EDEN PRAIRIE MN 55344
55403, 05	MINNEAPOLIS MN 55403
55404, 54	MINNEAPOLIS MN 55404

Column A Destination ZIP Codes	Column B Label Container To
55411, 12	MINNEAPOLIS MN 55411
55413, 18	MINNEAPOLIS MN 55413
55414, 55	MINNEAPOLIS MN 55414
55417, 50	MINNEAPOLIS MN 55417
55420, 25, 31	MINNEAPOLIS MN 55420
55424, 36, 39	MINNEAPOLIS MN 55424
55428-30	MINNEAPOLIS MN 55428
55433, 48	MINNEAPOLIS MN 55433
55434, 49	MINNEAPOLIS MN 55434
55437, 38	MINNEAPOLIS MN 55437
55441, 42	MINNEAPOLIS MN 55441
55443-45	MINNEAPOLIS MN 55443
55446, 47	MINNEAPOLIS MN 55446
55803, 04	DULUTH MN 55803
55901-03, 05	ROCHESTER MN 55901
55904, 06	ROCHESTER MN 55904
56001-03	MANKATO MN 56001
56301, 03, 04	ST CLOUD MN 56301
56501, 02	DETROIT LAKES MN 56501
56560-63	MOORHEAD MN 56560
57103, 04, 10	SIOUX FALLS SD 57103
57105-09	SIOUX FALLS SD 57105
57401, 02	ABERDEEN SD 57401
57701, 02, 09	RAPID CITY SD 57701
58103, 04, 06	FARGO ND 58103
58105, 07-09	FARGO ND 58105
58201-08	GRAND FORKS ND 58201
58401, 02, 05	JAMESTOWN ND 58401
58501, 02, 05	BISMARCK ND 58501
58601, 02	DICKINSON ND 58601
58701-05, 07	MINOT ND 58701
58801, 02	WILLISTON ND 58801
59101, 05	BILLINGS MT 59101
59102, 06	BILLINGS MT 59102
59103, 04, 07, 08	BILLINGS MT 59103
59401, 02, 05	GREAT FALLS MT 59401
59403, 04, 06, 14	GREAT FALLS MT 59404
59701-03, 50	BUTTE MT 59701
59801, 03	MISSOULA MT 59801
59802, 04, 08	MISSOULA MT 59802
60411, 12	CHICAGO HEIGHTS IL 60411
60431, 34, 35	JOLIET IL 60431
60432, 33, 36	JOLIET IL 60432
60440, 90	BOLINGBROOK IL 60440
60441, 46	LOCKPORT IL 60441
60453, 59	OAK LAWN IL 60453
60415, 54-58	OAK LAWN IL 60454
60462, 67	ORLAND PARK IL 60462
60463-65, 82	PALOS HEIGHTS IL 60463
60477, 78	TINLEY PARK IL 60477
60504, 05	AURORA IL 60504
60506, 07	AURORA IL 60506
60521-23	HINSDALE IL 60521
60525, 26	LA GRANGE IL 60525
60564, 65	NAPERVILLE IL 60564
60566, 67	NAPERVILLE IL 60566
61801-03	CHAMPAIGN IL 61801
61820-22	CHAMPAIGN IL 61821
61832-34	CHAMPAIGN IL 61832
62025, 26	EDWARDSVILLE IL 62025

Column A Destination ZIP Codes	Column B Label Container To
62201-08	EAST ST LOUIS IL 62201
62220-22, 25	BELLEVILLE IL 62220
62223, 26	DUTCH HOLLOW STA IL 62223
62224, 58	MASCOUTAH IL 62258
62301-06	QUINCY IL 62301
62901-03	CARBONDALE IL 62901
63005, 06	CHESTERFIELD MO 63005
63011, 22	BALLWIN MO 63011
63021, 24	BALLWIN MO 63021
63026, 99	FENTON MO 63026
63019, 28	FESTUS MO 63028
63032-34	FLORISSANT MO 63032
63044, 45	BRIDGETON MO 63044
63101, 02, 64, 69, 88, 99	ST LOUIS MO 63101
63104, 58	ST LOUIS MO 63104
63105, 24	ST LOUIS MO 63105
63107, 13, 15, 20	ST LOUIS MO 63107
63108, 56	ST LOUIS MO 63108
63109, 39	ST LOUIS MO 63109
63111, 18	ST LOUIS MO 63111
63112, 33	ST LOUIS MO 63112
63126-28	ST LOUIS MO 63126
63129, 51	ST LOUIS MO 63129
63134, 40	ST LOUIS MO 63134
63137, 38	ST LOUIS MO 63137
63301-04	ST CHARLES MO 63301
63366, 67	O'FALLON MO 63366
63601, 53	PARK HILLS MO 63601
63701-03	CAPE GIRARDEAU MO 63701
63901, 02	POPLAR BLUFF MO 63901
64013, 15	BLUE SPRINGS MO 64015
64050, 51, 56, 58	INDEPENDENCE MO 64050
64053, 54	INDEPENDENCE MO 64053
64055, 57	INDEPENDENCE MO 64055
64064, 86	LEES SUMMIT MO 64064
64068, 69	LIBERTY MO 64068
64081, 82	LEES SUMMIT MO 64081
64101, 02, 05, 96	KANSAS CITY MO 64105
64109, 28	KANSAS CITY MO 64109
64111, 71	KANSAS CITY MO 64111
64116, 17, 60, 61	KANSAS CITY MO 64116
64118, 88	KANSAS CITY MO 64118
64119, 57, 58, 67	KANSAS CITY MO 64119
64120, 25, 26	KANSAS CITY MO 64120
64123, 24	KANSAS CITY MO 64123
64129, 30	KANSAS CITY MO 64130
64133, 36	KANSAS CITY MO 64133
64134, 37, 92	KANSAS CITY MO 64134
64138, 39	KANSAS CITY MO 64138
64114, 45-49	KANSAS CITY MO 64145
64151, 53, 54, 63, 64, 90	KANSAS CITY MO 64153
64155, 56, 65, 66	KANSAS CITY MO 64155
64501, 05	ST JOSEPH MO 64501
64801, 02	JOPLIN MO 64801
64803, 04	JOPLIN MO 64803
65101, 09, 10	JEFFERSON CITY MO 65101
65102-08	JEFFERSON CITY MO 65102
65201, 02, 11-16	COLUMBIA MO 65201
65203, 17, 18	COLUMBIA MAIN MO 65203
65401, 02, 09	ROLLA MO 65401

Column A Destination ZIP Codes	Column B Label Container To
65616, 72	BRANSON MO 65616
65804, 08, 09	SPRINGFIELD MO 65804
65807, 10	SPRINGFIELD MO 65807
66027, 43, 48	FT LEAVENWORTH KS 66027
66044, 49	LAWRENCE KS 66044
66046, 47	LAWRENCE KS 66046
66051, 61	OLATHE KS 66061
66062, 63	OLATHE KS 66062
66101, 15, 17, 18	KANSAS CITY KS 66101
66102, 10	KANSAS CITY KS 66102
66103, 05	KANSAS CITY KS 66103
66109, 11-13	KANSAS CITY KS 66112
66202, 05, 22	SHAWNEE MISSION KS 66202
66203, 16	SHAWNEE MISSION KS 66203
66210, 25	SHAWNEE MISSION KS 66210
66212, 82	SHAWNEE MISSION KS 66212
66209, 13	SHAWNEE MISSION KS 66213
66214, 15, 85	SHAWNEE MISSION KS 66215
66221, 23, 24	SHAWNEE MISSION KS 66223
66217-20, 26, 27, 86	SHAWNEE MISSION KS 66226
66502, 03, 05, 06	MANHATTAN KS 66502
66603, 06, 07, 12, 16, 83	TOPEKA KS 66603
66604, 47, 67	TOPEKA KS 66604
66605, 09, 11	TOPEKA KS 66605
66608, 17, 18	TOPEKA KS 66608
66610, 14, 15	TOPEKA KS 66610
66762, 63	PITTSBURG KS 66762
67204, 19	WICHITA, KS 67204
67205, 12, 23	WICHITA KS 67205
67206, 26, 28, 30, 32	WICHITA KS 67206
67208, 20	WICHITA KS 67208
67209, 15, 27, 35	WICHITA KS 67209
67210, 16	WICHITA KS 67210
67401, 02	SALINA KS 67401
67501, 02, 04, 05	HUTCHINSON KS 67501
67901, 05	LIBERAL KS 67901
68025, 26	FREMONT NE 68025
68105, 06, 55	OMAHA NE 68105
68108, 09	OMAHA NE 68108
68110, 11, 19, 20	OMAHA NE 68110
68112, 52	OMAHA NE 68112
68114, 24	OMAHA NE 68114
68116, 18, 30, 54	OMAHA NE 68116
68117, 27	OMAHA NE 68117
68122, 34, 42, 64	OMAHA NE 68122
68123, 47	BELLEVUE NE 68123
68128, 33, 57	PAPILLION NE 68128
68131, 32	OMAHA NE 68131
68135-39	OMAHA NE 68135
68144, 45	OMAHA NE 68144
68502, 42	LINCOLN NE 68502
68504, 07, 14, 17, 27	LINCOLN NE 68504
68506, 20	LINCOLN NE 68506
68512, 22, 23, 32	LINCOLN NE 68512
68516, 26	LINCOLN NE 68516
68521, 24, 28, 31	LINCOLN NE 68521
68601, 02	COLUMBUS NE 68601
68701, 02	NORFOLK NE 68701
68801-03	GRAND ISLAND NE 68801
68847-49	KEARNEY NE 68847

Column A Destination ZIP Codes	Column B Label Container To
68901, 02	HASTINGS NE 68901
70501, 02, 07	LAFAYETTE LA 70501
70503, 06, 96	LAFAYETTE LA 70506
70508, 98	LAFAYETTE LA 70508
70704, 14	BAKER LA 70704
70706, 26, 27	DENHAM SPRINGS 70706
70707, 37	GONZALES LA 70707
70764, 65	PLAQUEMINE LA 70764
70801, 02, 21-23, 25, 83	BATON ROUGE LA 70801
70803, 93, 94	BATON ROUGE LA 70803
70805, 12, 92	BATON ROUGE LA 70805
70806, 96	BATON ROUGE LA 70806
70807, 11, 18, 74	BATON ROUGE LA 70807
70808, 20, 98	BATON ROUGE LA 70808
70809, 10, 36, 84	BATON ROUGE LA 70809
70814, 95	BATON ROUGE LA 70814
70815, 19, 31	BATON ROUGE LA 70815
70816, 17, 27, 79	BATON ROUGE LA 70816
71102, 20, 61-66	SHREVEPORT LA 71102
71103, 33	SHREVEPORT LA 71103
71104, 34	SHREVEPORT LA 71104
71105, 15, 35	SHREVEPORT LA 71105
71106, 36	SHREVEPORT LA 71106
71107, 37	SHREVEPORT LA 71107
71108,18, 38, 48	SHREVEPORT LA 71108
71109, 19, 29, 49	SHREVEPORT LA 71109
71111, 71, 72	BOSSIER CITY LA 71111
71112, 13	BOSSIER CITY LA 71112
71130, 53	SHREVEPORT LA 71130
71601-13	PINE BLUFF AR 71601
71901, 09, 13, 23, 53	HOT SPRINGS NTL PK AR 71901
72113-20, 24, 90	NORTH LITTLE ROCK AR 72113
72201-12, 14-17, 19, 21-23, 25, 27	LITTLE ROCK AR 72201
72301-03	WEST MEMPHIS AR 72301
72315-19	BLYTHEVILLE AR 72315
72335, 36	FORREST CITY AR 72335
72396, 97	WYNNE AR 72396
72401-04	JONESBORO AR 72401
72450, 51	PARAGOULD AR 72450
72501-03	BATESVILLE AR 72501
72701-04	FAYETTEVILLE AR 72701
72712-16	BENTONVILLE AR 72712
72901-06, 08, 13, 14, 16, 23	FORT SMITH AR 72901
73034, 83	EDMOND OK 73034
73069-72	NORMAN OK 73069
73501, 02, 05-07	LAWTON OK 73501
73701-06	ENID OK 73701
74003-06	BARTLESVILLE OK 74003
74011-14	BROKEN ARROW OK 74011
74017, 18	CLAREMORE OK 74017
74066, 67	SAPULPA OK 74066
74074-78	STILLWATER OK 74074
74354, 55	MIAMI OK 74354
74361, 62	PRYOR OK 74361
74401-03	MUSKOGEE OK 74401
74464, 65	TAHLEQUAH OK 74464
74467-77	WAGONER OK 74467
74501, 02	MCALESTER OK 74501

Column A Destination ZIP Codes	Column B Label Container To
74601-04	PONCA CITY OK 74601
74701, 02	DURANT OK 74701
75018, 19	COPPELL TX 75019
75020, 21	DENISON TX 75020
75030, 88, 89	ROWLETT TX 75030
75032, 87	ROCKWALL TX 75032
75034, 35	FRISCO TX 75034
75090-92	SHERMAN TX 75090
75116, 37	DUNCANVILLE TX 75116
75134, 46	LANCASTER TX 75134
75160, 61	TERRELL TX 75160
75165, 67	WAXAHACHIE TX 75165
75401-04	GREENVILLE TX 75401
75428, 29	COMMERCE TX 75428
75455, 56	MOUNT PLEASANT TX 75455
75460-62	PARIS TX 75460
75482, 83	SULPHUR SPRINGS TX 75482
75652-54	HENDERSON TX 75652
75662, 63	KILGORE TX 75662
75670-72	MARSHALL TX 75670
76007, 10	ARLINGTON TX 76010
76005, 06, 11	ARLINGTON TX 76011
76012, 94	ARLINGTON TX 76012
76004, 13	ARLINGTON TX 76013
76003, 14, 18, 96	ARLINGTON TX 76014
76001, 15-17	ARLINGTON TX 76015
76301, 03-06, 09	WICHITA FALLS TX 76301
76302, 08, 10	WICHITA FALLS TX 76302
76384, 85	VERNON TX 76384
76501-05, 08	TEMPLE TX 76501
76540, 41, 43	KILLEEN TX 76540
76542, 47, 48	KILLEEN TX 76542
76544-46	KILLEEN TX 76544
76701, 03, 06, 11	WACO TX 76701
76704, 05, 15	WACO TX 76704
76707, 08	WACO TX 76707
76710, 14	WACO TX 76710
76702, 12	WACO TX 76712
77301-06, 84, 85	CONROE TX 77301
77325, 39, 45	HUMBLE TX 77325
77327, 28	CLEVELAND TX 77327
77338, 46, 47, 96	HUMBLE TX 77338
77340-44, 48, 49	HUNTSVILLE TX 77340
77373, 83, 88	SPRING TX 77373
77375, 77	TOMBALL TX 77375
77379, 89, 91	SPRING TX 77379
77380, 86, 87	SPRING TX 77380
77381, 82, 93	SPRING TX 77381
77401, 02	BELLAIRE TX 77401
77404, 14	BAY CITY TX 77404
77406, 69	RICHMOND TX 77406
77410, 29, 33	CYPRESS TX 77410
77449, 50, 91-94	KATY TX 77449
77459, 89	MISSOURI CITY TX 77459
77477, 97	STAFFORD TX 77477
77478, 87	SUGAR LAND TX 77478
77479, 96	SUGAR LAND TX 77479
77501, 02, 06	PASADENA TX 77501
77503-05, 07, 08	PASADENA TX 77503
77510, 17	SANTA FE TX 77510

Column A Destination ZIP Codes	Column B Label Container To
77511, 12	ALVIN TX 77511
77515, 16	ANGLETON TX 77515
77520-22	BAYTOWN TX 77520
77541, 42	FREEPORT TX 77541
77546, 49	FRIENDSWOOD TX 77546
77550, 53, 55	GALVESTON TX 77550
77551, 52, 54	GALVESTON TX 77551
77571, 72	LA PORTE TX 77571
77573, 74	LEAGUE CITY TX 77573
77581, 84, 88	PEARLAND TX 77581
77590, 92	TEXAS CITY TX 77590
77630, 32	ORANGE TX 77630
77640, 43	PORT ARTHUR TX 77640
77662, 70	VIDOR TX 77662
77801-08	BRYAN TX 77801
77833, 34	BRENHAM TX 77833
77840-45	COLLEGE STATION TX 77840
77868, 69	NAVASOTA TX 77868
78028, 29	KERRVILLE TX 78028
78040-46	LAREDO TX 78040
78102-04	BEEVILLE TX 78102
78130-33	NEW BRAUNFELS TX 78130
78148-50	UNIVERSAL CITY TX 78148
78155, 56	SEGUIN TX 78155
78202, 04, 07, 83	SAN ANTONIO TX 78202
78203, 10	SAN ANTONIO TX 78203
78205, 06, 91-99	SAN ANTONIO TX 78205
78208, 09	SAN ANTONIO TX 78208
78211, 14, 21, 24-26, 64	SAN ANTONIO TX 78211
78212, 15	SAN ANTONIO TX 78212
78216, 79	SAN ANTONIO TX 78216
78219, 20, 22, 44, 62, 63	SAN ANTONIO TX 78219
78227, 42	SAN ANTONIO TX 78227
78230, 31, 48, 78	SAN ANTONIO TX 78230
78232, 47, 58-61, 70	SAN ANTONIO TX 78232
78233, 39, 66	SAN ANTONIO TX 78233
78238, 68	SAN ANTONIO TX 78238
78240, 49, 55-57, 69	SAN ANTONIO TX 78240
78245, 50-54, 76	SAN ANTONIO TX 78245
78332, 33	ALICE TX 78332
78363, 64	KINGSVILLE TX 78363
78381, 82	ROCKPORT TX 78382
78401-03, 07, 08, 70, 71, 73, 75-78	CORPUS CHRISTI TX 78401
78404, 63	CORPUS CHRISTI TX 78404
78405, 65	CORPUS CHRISTI TX 78405
78406, 09, 10, 26, 60	CORPUS CHRISTI TX 78406
78411, 66	CORPUS CHRISTI TX 78411
78412, 14, 68	CORPUS CHRISTI TX 78412
78413, 27, 72	CORPUS CHRISTI TX 78413
78415-17, 67	CORPUS CHRISTI TX 78415
78418, 19, 80	CORPUS CHRISTI TX 78418
78502, 05	MCALLEN TX 78502
78503, 04	MCALLEN TX 78503
78522, 23, 26	BROWNSVILLE TX 78522
78539, 40	EDINBURG TX 78539
78550-53	HARLINGEN TX 78550
78572, 73	MISSION TX 78572
78613, 30	CEDAR PARK TX 78613
78626-28	GEORGETOWN TX 78626

Column A Destination ZIP Codes	Column B Label Container To
78335, 36	ARANSAS PASS TX 78336
78641, 45, 46	LEANDER TX 78641
78664, 82, 83	ROUND ROCK TX 78664
78666, 67	SAN MARCOS TX 78666
78680, 81	ROUND ROCK TX 78680
78702, 21, 22	AUSTIN TX 78702
78705, 51	AUSTIN TX 78705
78712, 13	AUSTIN TX 78712
78717, 26, 29, 50	AUSTIN TX 78717
78719, 41, 42, 44	AUSTIN TX 78719
78723-25	AUSTIN TX 78723
78727, 58	AUSTIN TX 78727
78728, 53	AUSTIN TX 78728
78730, 59	AUSTIN TX 78730
78732, 34	AUSTIN TX 78732
78733, 46	AUSTIN TX 78733
78735-37, 39, 49	AUSTIN TX 78735
78747, 48	AUSTIN TX 78747
78752, 54	AUSTIN TX 78752
78756, 57	AUSTIN TX 78756
78801, 02	UVALDE TX 78801
78840-43, 47	DEL RIO TX 78840
78852, 53	EAGLE PASS TX 78852
79101-04	AMARILLO TX 79101
79106, 19, 21, 24, 60	AMARILLO TX 79106
79107, 08, 11	AMARILLO TX 79107
79110, 18	AMARILLO TX 79110
79401, 03, 05, 08, 11, 15, 17	LUBBOCK TX 79401
79404, 12, 23, 52	LUBBOCK TX 79404
79406, 09, 30	LUBBOCK TX 79406
79407, 14	LUBBOCK TX 79407
79410, 13, 93	LUBBOCK TX 79410
79416, 90	LUBBOCK TX 79416
79424, 64	LUBBOCK TX 79424
79701, 02	MIDLAND TX 79701
79703, 05, 07	MIDLAND TX 79703
79761, 63, 66	ODESSA TX 79761
79762, 64, 65	ODESSA TX 79762
79906, 08	EL PASO TX 79906
79907, 17	EL PASO TX 79907
79922, 32	EL PASO TX 79922
79924, 34	EL PASO TX 79924
79940-55	EL PASO TX 79940
80001, 02, 04	ARVADA CO 80001
80003, 05-07	ARVADA CO 80003
80010, 40, 45	AURORA CO 80010
80011, 18, 19, 42	AURORA CO 80011
80012, 41	AURORA CO 80012
80014, 44	AURORA CO 80014
80015, 16, 46	AURORA CO 80015
80017, 47	AURORA CO 80017
80020, 21, 38	BROOMFIELD CO 80020
80033, 34	WHEAT RIDGE CO 80033
80110-12, 55	ENGLEWOOD CO 80110
80120, 25, 60	LITTLETON CO 80120
80121, 22, 61	LITTLETON CO 80121
80124, 26, 63	LITTLETON CO 80124
80127, 62	LITTLETON CO 80127
80202, 65, 90, 93, 94	DENVER CO 80202

Column A Destination ZIP Codes	Column B Label Container To
80203, 64, 95	DENVER CO 80203
80210, 50	DENVER CO 80210
80227, 35, 36	DENVER CO 80227
80233, 41	DENVER CO 80233
80239, 49	DENVER CO 80239
80301, 08	BOULDER CO 80301
80302, 06	BOULDER CO 80302
80303, 07	BOULDER CO 80303
80437, 39	EVERGREEN CO 80437
80477, 87	STEAMBOAT SPRINGS CO 80477
80501, 04	LONGMONT CO 80501
80521, 22, 24	FT COLLINS CO 80521
80525-28	FT COLLINS CO 80525
80537, 39	LOVELAND CO 80537
80840, 41	USAF ACADEMY CO 80840
80901, 03, 05	COLORADO SPGS CO 80901
80904, 34	COLORADO SPGS CO 80904
80906, 37, 60	COLORADO SPGS CO 80906
80907, 33	COLORADO SPGS CO 80907
80908, 21	COLORADO SPGS CO 80908
80909, 32	COLORADO SPGS CO 80909
80910, 35	COLORADO SPGS CO 80910
80911, 25, 31	COLORADO SPGS CO 80911
80913, 26	COLORADO SPGS CO 80913
80915, 22, 28-30, 70	COLORADO SPGS CO 80915
80918, 36	COLORADO SPGS CO 80918
80919, 49	COLORADO SPGS CO 80919
80920, 62	COLORADO SPGS CO 80920
81002, 07	PUEBLO CO 81002
81003, 08	PUEBLO CO 81003
81004-06	PUEBLO CO 81004
81101, 02	ALAMOSA CO 81101
81147, 57	PAGOSA SPRINGS CO 81147
81212, 15	CANON CITY CO 81212
81301, 02	DURANGO CO 81301
82001, 07, 09	CHEYENNE WY 82001
82051, 57, 63, 70-73	LARAMIE WY 82070
82602, 05	CASPER WY 82602
82601, 04, 09	CASPER WY 82609
82716-18	GILLETTE WY 82716
82901, 02	ROCK SPRINGS WY 82901
82930, 31	EVANSTON WY 82930
83001, 02	JACKSON WY 83001
83605, 06	CALDWELL ID 83605
83642, 80	MERIDIAN ID 83642
83647, 48	MOUNTAIN HOME ID 83647
83651-53, 86, 87	NAMPA ID 83651
83702, 03, 06, 12	BOISE ID 83702
83704, 11, 13	BOISE ID 83704
83707, 08	BOISE ID 83707
83709, 19	BOISE ID 83709
83716, 17	BOISE ID 83716
83814-16	COEUR D ALENE ID 83814
84003, 04	AMERICAN FORK UT 84003
84010, 11	BOUNTIFUL UT 84010
84015, 75, 89	CLEARFIELD UT 84015
84036, 61	KAMAS UT 84036
84040, 41	LAYTON UT 84040
84042, 62	PLEASANT GROVE UT 84042
84057, 59	OREM UT 84057

Column A Destination ZIP Codes	Column B Label Container To
84058, 97	OREM UT 84058
84060, 68, 98	PARK CITY UT 84060
84065, 95	RIVERTON UT 84065
84070, 91, 94	SANDY UT 84070
84078, 79	VERNAL UT 84078
84084, 88	WEST JORDAN UT 84084
84090, 92, 93	SANDY UT 84090
84101, 44, 80	SALT LAKE CTY UT 84101
84106, 52	SALT LAKE CTY UT 84106
84107, 57	SALT LAKE CTY UT 84107
84108, 58	SALT LAKE CTY UT 84108
84110, 45, 51	SALT LAKE CTY UT 84110
84111, 33, 38	SALT LAKE CTY UT 84111
84115, 65	SALT LAKE CTY UT 84115
84120, 28, 70	SALT LAKE CTY UT 84120
84121, 71	SALT LAKE CTY UT 84121
84125-27	SALT LAKE CTY UT 84125
84302, 24	BRIGHAM CITY UT 84302
84321, 23	LOGAN UT 84321
84401, 09	OGDEN UT 84401
84402, 03, 05, 15	OGDEN UT 84403
84404, 12, 14	OGDEN UT 84404
84511, 33	BLANDING UT 84511
84601, 03, 05, 06	PROVO UT 84601
84663, 64	SPRINGVILLE UT 84663
84701, 32	RICHFIELD UT 84701
84720, 22, 81	CEDAR CITY UT 84720
84770, 71, 82	ST GEORGE UT 84770
85001, 02	PHOENIX AZ 85001
85003, 04, 25, 30, 73	PHOENIX AZ 85004
85008, 10	PHOENIX AZ 85008
85005, 07, 09, 98	PHOENIX AZ 85009
85013, 67	PHOENIX AZ 85013
85011, 14	PHOENIX AZ 85014
85016, 64	PHOENIX AZ 85016
85017, 61, 79	PHOENIX AZ 85017
85018, 60	PHOENIX AZ 85018
85021, 69	PHOENIX AZ 85021
85022, 68	PHOENIX AZ 85022
85023, 80	PHOENIX AZ 85023
85024, 50, 54	PHOENIX AZ 85024
85029, 53, 71	PHOENIX AZ 85029
85019, 31, 43, 63	PHOENIX AZ 85031
85032, 46, 78	PHOENIX AZ 85032
85034, 36, 74	PHOENIX AZ 85034
85038, 62, 72, 82, 99	PHOENIX AZ 85038
85040, 66	PHOENIX AZ 85040
85044, 76	PHOENIX AZ 85044
85045, 48, 70	PHOENIX AZ 85048
85201, 11	MESA AZ 85201
85202, 74	MESA AZ 85202
85203, 13, 75	MESA AZ 85203
85204, 14	MESA AZ 85204
85205, 07, 15, 77	MESA AZ 85205
85206, 12, 16	MESA AZ 85206
85217, 19, 20, 78	APACHE JUNCTION AZ 85219
85222, 30	CASA GRANDE AZ 85222
85224, 46	CHANDLER AZ 85224
85225, 44	CHANDLER AZ 85225
85232, 79	FLORENCE AZ 85232

Column A Destination ZIP Codes	Column B Label Container To
85233, 34, 96, 99	GILBERT AZ 85233
85248, 49	CHANDLER AZ 85248
85250, 53	SCOTTSDALE AZ 85250
85251, 52	SCOTTSDALE AZ 85251
85255, 62	SCOTTSDALE AZ 85255
85260, 67	SCOTTSDALE AZ 85260
85256, 57, 71	SCOTTSDALE AZ 85256
85258, 61	SCOTTSDALE AZ 85258
85259, 63, 64, 68, 69	SCOTTSDALE AZ 85259
85281, 86	TEMPE AZ 85281
85283, 84	TEMPE AZ 85283
85285, 87-89	TEMPE AZ 85285
85301, 03, 05, 07, 09, 11	GLENDALE AZ 85301
85302, 04, 06, 12	GLENDALE AZ 85302
85308, 10, 18	GLENDALE AZ 85308
85323, 38	AVONDALE AZ 85323
85345, 80	PEORIA AZ 85345
85351, 72	SUN CITY AZ 85351
85358, 90	WICKENBURG AZ 85358
85363, 73	YOUNGTOWN AZ 85363
85364-67, 69	YUMA AZ 85364
85374-76, 78, 79, 87	SUN CITY AZ 85374
85381, 82	PEORIA AZ 85381
85501, 02	GLOBE AZ 85501
85541, 47	PAYSON AZ 85541
85546, 48	SAFFORD AZ 85546
85607, 08	DOUGLAS AZ 85607
85614, 22	GREEN VALLEY AZ 85614
85621, 28, 62	NOGALES AZ 85621
85613, 35, 36, 50	SIERRA VISTA AZ 85635
85643, 44	WILLCOX AZ 85643
85701, 02	TUCSON AZ 85701
85706, 77	TUCSON AZ 85706
85712, 49	TUCSON AZ 85712
85713, 14	TUCSON AZ 85713
85715, 50	TUCSON AZ 85715
85720, 21	TUCSON AZ 85720
85726, 44	TUCSON AZ 85726
85730, 47, 48	TUCSON AZ 85730
85737, 39	TUCSON AZ 85737
85741, 42	TUCSON AZ 85741
85735, 36, 46	TUCSON AZ 85746
86001, 02	FLAGSTAFF AZ 86001
86003, 04	FLAGSTAFF AZ 86003
86301-04, 05	PRESCOTT AZ 86301
86312-14	PRESCOTT VALLEY AZ 86314
86322, 24, 31	CAMP VERDE AZ 86322
86336, 39-41, 51	SEDONA AZ 86336
86401, 02, 13	KINGMAN AZ 86401
86403-06	LAKE HAVASU CITY AZ 86403
86426, 29, 30, 39, 42	BULLHEAD CITY AZ 86442
87102, 04, 94	ALBUQUERQUE NM 87102
87105, 21, 95	ALBUQUERQUE NM 87105
87106, 96	ALBUQUERQUE NM 87106
87107, 97	ALBUQUERQUE NM 87107
87108, 98	ALBUQUERQUE NM 87108
87109, 22, 99	ALBUQUERQUE NM 87109
87110, 76, 90	ALBUQUERQUE NM 87110
87111, 54, 91	ALBUQUERQUE NM 87111
87112, 53, 92	ALBUQUERQUE NM 87112

Column A Destination ZIP Codes	Column B Label Container To
87114, 84, 87, 93	ALBUQUERQUE NM 87114
87123, 81	ALBUQUERQUE NM 87123
87124, 74	ALBUQUERQUE NM 87124
87301, 05	GALLUP NM 87301
87401, 02, 99	FARMINGTON NM 87401
87502, 04	SANTA FE NM 87502
87532, 33	ESPANOLA NM 87532
88001, 11	LAS CRUCES NM 88001
88004, 06	LAS CRUCES NM 88004
88005, 12	LAS CRUCES NM 88005
88030, 31	DEMING NM 88030
88061, 62	SILVER CITY NM 88061
88101, 02	CLOVIS NM 88101
88210, 11	ARTESIA NM 88210
88220, 21	CARLSBAD NM 88220
88240-42	HOBBS NM 88240
88310, 11	ALAMOGORDO NM 88310
89005, 06	BOULDER CITY NV 89005
89012, 14	HENDERSON NV 89014
89011, 15	HENDERSON NV 89015
89018, 70	INDIAN SPRINGS NV 89018
89019, 26	JEAN NV 89019
89028, 29	LAUGHLIN NV 89028
89031, 33	NORTH LAS VEGAS NV 89031
89041, 48	PAHRUMP NV 89041
89049, 50	TONOPAH NV 89049
89102, 46	LAS VEGAS NV 89102
89103, 13, 35	LAS VEGAS NV 89103
89117, 47	LAS VEGAS NV 89117
89120, 23, 39	LAS VEGAS NV 89120
89128, 34, 38	LAS VEGAS NV 89128
89129-31	LAS VEGAS NV 89129
89431, 32	SPARKS NV 89431
89434-36	SPARKS NV 89434
89450-52	INCLINE VILLAGE NV 89450
89501, 12	RENO NV 89501
89503, 13	RENO NV 89503
89504, 05	RENO NV 89504
89510, 15	RENO NV 89510
89523, 33	RENO NV 89623
89701-06, 21	CARSON CITY NV 89701
90201, 02, 70	BELL CA 90201
90209-13	BEVERLY HILLS CA 90210
90220-24	COMPTON CA 90220
90230-33	CULVER CITY CA 90230
90239-42	DOWNEY CA 90240
90245, 66, 67	EL SEGUNDO CA 90245
90247-49	GARDENA CA 90247
90250, 51	HAWTHORNE CA 90250
90260, 61	LAWNDALE CA 90260
90263-65	MALIBU CA 90265
90274, 75	PALOS VERDES CA 90274
90254, 77, 78	REDONDO BEACH CA 90277
90291-96	VENICE CA 90291
90401, 06, 07	SANTA MONICA CA 90401
90402-05, 08-11	SANTA MONICA CA 90403
90601, 08	WHITTIER CA 90601
90602, 07	WHITTIER CA 90602
90603, 04, 09	WHITTIER CA 90603
90605, 06, 10	WHITTIER CA 90605

Column A Destination ZIP Codes	Column B Label Container To
90620-24	BUENA PARK CA 90620
90631-33	LA HABRA CA 90631
90637-39	LA MIRADA CA 90637
90650-52	NORWALK CA 90650
90660-65	PICO RIVERA CA 90660
90701-03	ARTESIA CA 90701
90706, 07	BELLFLOWER CA 90706
90711-14	LAKEWOOD CA 90712
90715, 16	LAKEWOOD CA 90715
90720, 21	LOS ALAMITOS CA 90720
90731-34	SAN PEDRO CA 90731
90744, 48	WILMINGTON CA 90744
90745, 47, 49	CARSON CA 90745
90803, 53	LONG BEACH CA 90803
91301, 76	AGOURA HILLS CA 91301
91303-05, 09	CANOGA PARK CA 91304
91306, 96	WINNETKA CA 91306
91307, 08	WEST HILLS CA 91307
91311-13	CHATSWORTH CA 91311
91319, 20	NEWBURY PARK CA 91319
91321, 22, 81	NEWHALL CA 91321
91324, 25, 28-30	NORTHRIDGE CA 91324
91326, 27	NORTHRIDGE CA 91326
91331, 33, 34	PACOIMA CA 91331
91335, 37	RESEDA CA 91335
91340-42, 92	SYLMAR CA 91342
91343, 93	NORTH HILLS CA 91343
91344-46, 94, 95	MISSION HILLS CA 91345
91310, 50, 80, 84	SANTA CLARITA CA 91350
91351, 86	CANYON COUNTRY CA 91351
91352, 53	SUN VALLEY CA 91352
91354, 55, 85	VALENCIA CA 91355
91356, 57	TARZANA CA 91356
91358-63	THOUSAND OAKS CA 91360
91302, 64, 65, 67, 71, 72, 99	WOODLAND HILLS CA 91364
91403, 13, 23	SHERMAN OAKS CA 91403
91601-03	NORTH HOLLYWOOD CA 91601
91604, 14	STUDIO CITY CA 91604
91605, 06, 08-12, 15, 16, 18	NORTH HOLLYWOOD CA 91605
91607, 17	VALLEY VILLAGE CA 91607
91701, 37	ALTA LOMA CA 91701
91718-20	CORONA CA 91718
91722, 24	COVINA CA 91722
91729, 30, 39	RANCHO CUCAMONGA CA 91730
91731, 32, 34	EL MONTE CA 91731
91740, 41	GLENDORA CA 91740
91744-47, 49	LA PUENTE CA 91744
91754, 55	MONTEREY PARK CA 91754
91761, 62, 64	ONTARIO CA 91761
91766-69	POMONA CA 91767
91775, 76, 78	SAN GABRIEL CA 91775
91784-86	UPLAND CA 91786
91788, 89	WALNUT CA 91789
91790-93	WEST COVINA CA 91790
91801-03	ALHAMBRA CA 91801
91901, 03	ALPINE CA 91901
91902, 08	BONITA CA 91902
91909, 11	CHULA VISTA CA 91909

Column A Destination ZIP Codes	Column B Label Container To
91910, 12	CHULA VISTA CA 91910
91913-15, 21	CHULA VISTA CA 91913
91932, 33	IMPERIAL BEACH CA 91932
91941-44	LA MESA CA 91941
91945, 46	LEMON GROVE CA 91945
91947, 50, 51	NATIONAL CITY CA 91950
91976-79	SPRING VALLEY CA 91977
92008, 18	CARLSBAD CA 92008
92019, 20, 22	EL CAJON CA 92020
92023, 24	ENCINITAS CA 92024
92025, 29, 33, 46	ESCONDIDO CA 92025
92026, 27, 30	ESCONDIDO CA 92026
92028, 88	FALLBROOK CA 92028
92037-39	LA JOLLA CA 92037
92049, 51, 52, 54, 55, 57	OCEANSIDE CA 92054
92056, 58	OCEANSIDE CA 92056
92064, 74	POWAY CA 92064
92067, 91	RANCHO SANTA FE CA 92067
92069, 79, 96	SAN MARCOS CA 92069
92071, 72	SANTEE CA 92071
92084, 85	VISTA CA 92084
92092, 93	LA JOLLA CA 92093
92201-03	INDIO CA 92201
92225, 26, 42, 80	BLYTHE CA 92225
92231, 32	CALEXICO CA 92231
92234, 35	CATHEDRAL CITY CA 92234
92243, 44	EL CENTRO CA 92243
92210, 11, 55, 60, 61	PALM DESERT CA 92260
92262-64	PALM SPRINGS CA 92262
92277, 78	TWENTYNINE PALMS CA 92277
92284-86	YUCCA VALLEY CA 92284
92307, 08	APPLE VALLEY CA 92307
92310-12	BARSTOW CA 92311
92314, 86	BIG BEAR CITY CA 92314
92313, 24	COLTON CA 92324
92334-37	FONTANA CA 92335
92340, 45	HESPERIA CA 92345
92329, 71	PHELAN CA 92371
92373-75	REDLANDS CA 92373
92376, 77	RIALTO CA 92376
92392-94	VICTORVILLE CA 92392
92401, 02, 08, 10	SN BERNARDINO CA 92401
92404, 13	SN BERNARDINO CA 92404
92405, 06	SN BERNARDINO CA 92405
92407, 27	SN BERNARDINO CA 92407
92501, 02	RIVERSIDE CA 92501
92503, 13	RIVERSIDE CA 92503
92504, 14	RIVERSIDE CA 92504
92505, 15	RIVERSIDE CA 92505
92506, 16	RIVERSIDE CA 92506
92507, 17	RIVERSIDE CA 92507
92508, 18	RIVERSIDE CA 92508
92509, 19	RIVERSIDE CA 92509
92530-32	LAKE ELSINORE CA 92531
92543-46	HEMET CA 92543
92551-55	MORENO VALLEY CA 92553
92556, 57	MORENO VALLEY CA 92557
92562-64	MURRIETA CA 92562
92570-72, 99	PERRIS CA 92570
92581-83	SAN JACINTO CA 92583

Column A Destination ZIP Codes	Column B Label Container To
92584-87	SUN CITY CA 92586
92589-93	TEMECULA CA 92591
92607, 77	LAGUNA NIGUEL CA 92607
92615, 46	HUNTINGTON BEACH CA 92615
92602-04, 18-20, 50	IRVINE CA 92619
92606, 14, 23	IRVINE CA 92623
92626-28	COSTA MESA CA 92628
92624, 29	DANA POINT CA 92629
92605, 47, 49	HUNTINGTON BEACH CA 92647
92651, 52	LAGUNA CA 92651
92653, 54	LAGUNA HILLS CA 92653
92657, 58, 60, 62, 65	NEWPORT BEACH CA 92658
92659, 61, 63	NEWPORT BEACH CA 92659
92672-74	SAN CLEMENTE CA 92672
92683-85	WESTMINSTER CA 92683
92610, 78, 79, 88	RCHO STA MARG CA 92688
92675, 90-93	MISSION VIEJO CA 92690
92780-82	TUSTIN CA 92781
92701-12, 28, 35, 99	SANTA ANA CA 92799
92821-23	BREA CA 92822
92831, 34	FULLERTON CA 92834
92832, 36	FULLERTON CA 92836
92833, 37	FULLERTON CA 92837
92835, 38	FULLERTON CA 92838
92840-44	GARDEN GROVE CA 92842
92845, 46	GARDEN GROVE CA 92846
92856, 57, 59, 61-69	ORANGE CA 92863
92870, 71	PLACENTIA CA 92871
92885-87	YORBA LINDA CA 92885
92801-08, 12, 14-17, 25, 50, 99	ANAHEIM CA 92899
93001, 02, 05, 07	VENTURA CA 93001
93003, 04, 06, 09	VENTURA CA 93003
93010-12	CAMARILLO CA 93010
93013, 14	CARPINTERIA CA 93013
93015, 16	FILLMORE CA 93015
93020, 21	MOORPARK CA 93020
93023, 24	OJAI CA 93023
93030-32, 35	OXNARD CA 93030
93033, 34	OXNARD CA 93033
93041-44	PORT HUENEME CA 93041
93060, 61	SANTA PAULA CA 93060
93062-65, 93, 97, 99	SIMI VALLEY CA 93065
93215, 16	DELANO CA 93215
93222, 25	FRAZIER PARK CA 93225
93230-32	HANFORD CA 93230
93245, 46	LEMOORE CA 93245
93257, 58	PORTERVILLE CA 93257
93274, 75	TULARE CA 93274
93277, 78	VISALIA CA 93277
93279, 91	VISALIA CA 93279
93401-10, 12	SAN LUIS OBISPO CA 93401
93436-38	LOMPOC CA 93436
93454-58	SANTA MARIA CA 93454
93501, 02	MOJAVE CA 93501
93504, 05	CALIFORNIA CITY CA 93505
93514, 15	BISHOP CA 93514
93516, 96	BORON CA 93516
93523, 24	EDWARDS CA 93523
93534-36, 39, 84, 86	LANCASTER CA 93534

Column A Destination ZIP Codes	Column B Label Container To
93550-52, 90, 91	PALMDALE CA 93550
93555, 56	RIDGECREST CA 93555
93561, 62, 81, 82	TEHACHAPI CA 93561
93611-13	CLOVIS CA 93612
93637-39	MADERA CA 93638
93901-17, 62	SALINAS CA 93907
93921-23	CARMEL CA 93923
93940-44	MONTEREY CA 93940
93950, 51	PACIFIC GROVE CA 93950
94010, 11	BURLINGAME CA 94010
94014-17	DALY CITY CA 94014
94023, 24	LOS ALTOS CA 94023
94025, 26, 28	MENLO PARK CA 94025
94035, 41-43	MOUNTAIN VIEW CA 94041
94061-65	REDWOOD CITY CA 94061
94080, 83	S SAN FRANCISCO CA 94080
94086-88	SUNNYVALE CA 94086
94301, 02, 06	PALO ALTO CA 94301
94303, 04	PALO ALTO CA 94303
94305, 09	STANFORD CA 94305
94401, 02	SAN MATEO CA 94401
94403, 04	SAN MATEO CA 94403
94501, 02	ALAMEDA CA 94501
94506, 26	DANVILLE CA 94506
94509, 31	ANTIOCH CA 94509
94519, 21	CONCORD CA 94519
94518, 20	CONCORD CA 94520
94533, 35	FAIRFIELD CA 94533
94536, 55	FREMONT CA 94536
94541-43	HAYWARD CA 94541
94540, 45	HAYWARD CA 94545
94546, 52	CASTRO VALLEY CA 94546
94550, 51	LIVERMORE CA 94550
94556, 75	MORAGA CA 94556
94558, 59, 81	NAPA CA 94558
94547, 72	RODEO CA 94572
94590, 92	VALLEJO CA 94590
94596, 97	WALNUT CREEK CA 94596
94702, 10	BERKELEY CA 94702
94801, 02	RICHMOND CA 94801
94925, 39, 76, 77	CORTE MADERA CA 94925
94927, 28, 31	ROHNERT PARK CA 94931
94941, 42	MILL VALLEY CA 94941
94945, 47-49	NOVATO CA 94947
94952, 54	PETALUMA CA 94952
94930, 60, 78, 79	SAN ANSELMO CA 94960
94965, 66	SAUSALITO CA 94965
95001, 03	APTOS CA 95003
95020, 21	GILROY CA 95020
95023, 24	HOLLISTER CA 95023
95030-32	LOS GATOS CA 95030
95037, 38	MORGAN HILL CA 95037
95050-56	SANTA CLARA CA 95050
95060-67	SANTA CRUZ CA 95060
95070, 71	SARATOGA CA 95070
95076, 77	WATSONVILLE CA 95076
95340, 41, 44, 48	MERCED CA 95340
95380-82	TURLOCK CA 95380
95472, 73	SEBASTOPOL CA 95472
95602-04	AUBURN CA 95603

Column A Destination ZIP Codes	Column B Label Container To
95608, 09	CARMICHAEL CA 95608
95610, 11, 21	CITRUS HEIGHTS CA 95610
95616-18	DAVIS CA 95616
95661, 78	ROSEVILLE CA 95678
95687, 88, 96	VACAVILLE CA 95687
95605, 91	WEST SACRAMENTO CA 95691
95926-29, 73, 76	CHICO CA 95926
95945, 49	GRASS VALLEY CA 95945
95965, 66	OROVILLE CA 95965
95967, 69	PARADISE CA 95969
95991, 92	YUBA CITY CA 95991
96150-58	SOUTH LAKE TAHOE CA 96150
96160, 61	TRUCKEE CA 96160
96720, 21	HILO HI 96721
96732, 33	KAHULUI HI 96732
96739, 40, 45	KAILUA KONA HI 96740
96738, 43	KAMUELA HI 96743
96761, 67	LAHAINA HI 96761
96701, 82	PEARL CITY HI 96782
96754, 57, 86	WAHIAWA HI 96786
96707, 09, 97	WAIPAHU HI 96797
97005, 08	BEAVERTON, OR 97005
97201, 58	PORTLAND OR 97201
97202, 82	PORTLAND OR 97202
97203, 31, 83	PORTLAND OR 97203
97204, 05, 40	PORTLAND OR 97204
97206, 86	PORTLAND OR 97206
97208, 28	PORTLAND OR 97208
97209, 10, 96	PORTLAND OR 97209
97212, 27	PORTLAND OR 97212
97213, 18, 38	PORTLAND OR 97213
97214, 32, 93	PORTLAND OR 97214
97215, 16, 33, 92	PORTLAND OR 97215
97219, 80	PORTLAND OR 97219
97220, 30, 94	PORTLAND OR 97220
97221, 25, 98	PORTLAND OR 97221
97222, 67-69	PORTLAND OR 97222
97223, 24, 81	PORTLAND OR 97223
97229, 91	PORTLAND OR 97229
97236, 66, 90	PORTLAND OR 97236
97301, 03, 05	SALEM OR 97301
97302, 06	SALEM OR 97302
97330, 31, 33, 35	CORVALIS OR 97333
97401, 40	EUGENE OR 97401
97404, 08	EUGENE OR 97404
97403, 05, 55	EUGENE OR 97405
97477, 78	SPRINGFIELD OR 97477
97501, 04	MEDFORD OR 97501
97526, 27	GRANTS PASS OR 97526
97601-03	KLAMATH FALLS OR 97601
97701, 02, 07-09	BEND OR 97701
98001, 02, 47, 71, 92	AUBURN WA 98002
98003, 23, 63, 93	FEDERAL WAY WA 98003
98004, 39	BELLEVUE WA 98004
98005, 15	BELLEVUE WA 98005
98007, 08	BELLEVUE WA 98007
98011, 41	BOTHELL WA 98011
98012, 21, 82	BOTHELL WA 98012
98020, 26	EDMONDS WA 98020
98022, 38	ENUMCLAW WA 98022

Column A Destination ZIP Codes	Column B Label Container To
98027, 29	ISSAQUAH WA 98027
98031, 42, 64	KENT WA 98031
98032, 35	KENT WA 98032
98033, 83	KIRKLAND WA 98033
98036, 37, 46	LYNNWOOD WA 98036
98048, 51	RAVENSDALE WA 98051
98053, 73	REDMOND WA 98053
98055, 58	RENTON WA 98055
98056, 57, 59	RENTON WA 98056
98101, 20, 29, 61, 71, 91	SEATTLE WA 98101
98102, 12	SEATTLE WA 98102
98104, 34, 54, 64, 74, 84	SEATTLE WA 98104
98105, 45, 85, 95	SEATTLE WA 98105
98106, 26	SEATTLE WA 98106
98107, 17	SEATTLE WA 98107
98111, 81	SEATTLE WA 98111
98114, 44	SEATTLE WA 98144
98138, 48, 58, 88	SEATTLE WA 98148
98168, 78	SEATTLE WA 98168
98160, 77	SEATTLE WA 98177
98221, 22	EVERETT WA 98221
98230, 31	EVERETT WA 98230
98270, 71	EVERETT WA 98270
98273, 74	EVERETT WA 98273
98290, 91, 96	EVERETT WA 98290
98329, 32, 35	GIG HARBOR WA 98332
98362, 63	PORT ANGELES WA 98362
98366, 67	PORT ORCHARD WA 98366
98371, 72	PUYALLUP WA 98371
98373-75	PUYALLUP WA 98375
98352, 90	SUMNER WA 98390
98401, 77	TACOMA WA 98401
98402, 21	TACOMA WA 98402
98403, 22-24	TACOMA WA 98403
98404, 42, 43	TACOMA WA 98404
98405, 15	TACOMA WA 98405
98406, 16	TACOMA WA 98406
98408, 12, 18	TACOMA WA 98408
98444, 47	TACOMA WA 98444
98445, 46	TACOMA WA 98445
98465-67	TACOMA WA 98465
98439, 99	TACOMA WA 98499
98501, 07	OLYMPIA WA 98501
98502, 08, 12	OLYMPIA WA 98502
98503, 09, 13	OLYMPIA WA 98503
98506, 16	OLYMPIA WA 98506
98660, 63, 66	VANCOUVER WA 98660
98661, 65, 68, 85, 86	VANCOUVER WA 98661
98662, 64, 82-84	VANCOUVER WA 98662
99163, 65	PULLMAN WA 99163
99202, 12	SPOKANE WA 99202
99203, 23	SPOKANE WA 99203
99204, 19, 24	SPOKANE WA 99204
99205, 09	SPOKANE WA 99205
99206, 14, 16	SPOKANE WA 99206
99207, 17	SPOKANE WA 99207
99208, 18, 28	SPOKANE WA 99208
99336-38	KENNEWICK WA 99336
99502, 07, 18	ANCHORAGE AK 99502
99515, 16	ANCHORAGE AK 99515

Column A Destination ZIP Codes	Column B Label Container To
99701, 03, 09, 12	FAIRBANKS AK 99701
99702, 05	FAIRBANKS AK 99702
99706-08	FAIRBANKS AK 99706

Column A Destination ZIP Codes	Column B Label Container To

BILLING CODE 7710–12–C

M MAIL PREPARATION AND SORTATION

M000 General Preparation Standards

M010 Mailpieces

M011 Basic Standards

1.0 TERMS AND CONDITIONS

1.1 Presort Process

[Amend M011.1.1 to incorporate a reference to package reallocation to read as follows:]

Presort is the process by which a mailer prepares mail so that it is sorted to at least the finest extent required by the standards for the rate claimed. Generally, presort is performed sequentially, from the lowest (finest) level to the highest level, to those destinations specified by standard and is completed at each level before the next level is prepared. Under standards for package reallocation for Periodicals flats and irregular parcels and Standard Mail (A) flats on pallets (see M041 and M045), mail will not necessarily be placed on the lowest (finest) level pallets (package reallocation is optional, but, if performed, must be done for the complete mailing job). Not all presort levels are applicable in all situations.

1.2 Presort Levels

[Amend M011.1.2 by revising 1.2d and adding new 1.2e and 1.2f to differentiate between 5-digit schemes for automation letters and 5-digit schemes for pallets and for carrier routes sacks of Periodicals flats and irregular parcels and Standard Mail (A) flats; redesignate current M011.1.2e through M011.1.2m as M011.1.2g through M011.1.2o, respectively, as follows:]

Terms used for presort levels are defined as follows:

* * * * *

d. 5-digit scheme (trays) for automation letters: the ZIP Code in the delivery address on all pieces is one of the 5-digit ZIP Code areas processed by the USPS as a single scheme, as shown in the USPS City State File.

e. 5-digit scheme carrier routes (sacks) for Periodicals flats and irregular parcels and Standard Mail (A) flats: the ZIP Code in the delivery address on all pieces in carrier route packages begins with one of the 5-digit ZIP Code zones processed by the USPS as a single scheme, as shown in L001.

f. 5-digit scheme (pallets) for Periodicals flats and irregular parcels and Standard Mail (A) flats: The ZIP Code in the delivery address on all pieces begins with one of the 5-digit ZIP Code zones processed by the USPS as a single scheme, as shown in L001.

* * * * *

1.3 Preparation Instructions

* * * * *

[Amend 1.3 by revising the first sentence of 1.3g to insert the phrase ''for automation letters''; inserting new 1.3h and i to define 5-digit/scheme sort for carrier routes sacks of Periodicals flats and irregular parcels and Standard Mail (A) flats and 5-digit/scheme sort for Periodicals flats and irregular parcels packages and Standard Mail (A) flats packages on pallets; redesignate 1.3h through s as 1.3j through u, respectively, to read as follows:]

g. A 5-digit scheme sort for automation letters yields * * *

h. A 5-digit/scheme carrier routes sort for sacked carrier route rate Periodicals flats and irregular parcels and Enhanced Carrier Route rate Standard Mail (A) flats yields 5-digit scheme carrier routes sacks for those 5-digit ZIP Codes listed in L001 and 5-digit carrier routes sacks for other areas. The 5-digit ZIP Codes in each scheme are treated as a single presort destination subject to a single minimum sack volume, with no further separation by 5-digit ZIP Code required. Sacks prepared for a 5-digit scheme destination that contain carrier route packages for only one of the schemed 5-digit areas are still considered 5-digit carrier route scheme sorted and are labeled accordingly. The 5-digit/scheme sort is optional for carrier route rate flat-size and irregular parcel Periodicals and flat-size Enhanced Carrier Route rate Standard Mail (A) in sacks. If preparation of 5-digit scheme carrier routes sacks is performed, it must be done for all 5-digit scheme destinations. A 5-digit/scheme carrier route sort may not be used for mail at other rates in sacks.

i. A 5-digit/scheme sort for Periodicals flats and irregular parcels and Standard Mail (A) flats prepared as packages on pallets yields 5-digit scheme pallets for those 5-digit ZIP Codes listed in L001 and 5-digit pallets for other areas. The 5-digit ZIP Codes in each scheme are treated as a single presort destination subject to a single minimum pallet volume, with no further separation by 5-digit ZIP Code required. Pallets prepared for a 5-digit scheme destination that contain packages for only one of the schemed 5-digit areas are still considered 5-digit scheme sorted and are labeled accordingly. The 5-digit/scheme sort is optional for flat-size and irregular parcel-size Periodicals and flat-size Enhanced Carrier Route rate Standard Mail (A) prepared as packages on pallets and may not be used for other mail prepared on pallets, except for packages of Standard Mail (A) irregular parcels that are part of a mailing job that is prepared in part as palletized flats at automation rates. If preparation of 5-digit scheme pallets is performed, it must be done for all 5-digit scheme destinations.

* * * * *

M030 Containers

M031 Labels

* * * * *

4.0 PALLET LABELS

* * * * *

4.8 Delivery Unit, SCF, DDU, and DSCF Rates

[Amend M031.4.8 to refer to 5-digit scheme pallets, as follows:]

If a 5-digit, 5-digit scheme, 3-digit, or SCF pallet contains copies claimed at Periodicals delivery unit and SCF zone rates, or Standard Mail DDU and DSCF rates, as applicable, the content line of the pallet label must show the designation ''DDU/SCF,'' after the content description.

* * * * *

5.0 SECOND LINE CODES

[Amend 5.0 to include code for 5-digit scheme carrier routes sacks, as follows:]

The codes shown below must be used as appropriate on Line 2 of sack, tray, and pallet labels.

* * * * *

Content	Code
Scheme	SCH. (Periodicals and Standard Mail (A) 5-digit scheme carrier routes sacks and 5-digit scheme pallets only).

* * * * *

M032 Barcoded Labels

1.0 BASIC STANDARDS—TRAY AND SACK LABELS

* * * * *

Exhibit 1.3a 3-Digit Content Identifier Numbers

[Amend Exhibit 1.3a, Periodicals (PER) and Standard (A) by inserting new 5-digit scheme carrier routes sacs and 5-digit scheme Enhanced Carrier Routes sacks categories, respectively, to read as follows:]

* * * * *

Class and mailing	CIN	Human-readable content line
* * * * *	*	*
Periodicals (Per)		
* * * * *	*	*
PER Flats—Carrier Route:		
* * * * *	*	*
5-digit carrier routes sacks	386	PER FLTS CR–RTS
5-digit scheme car. rts. sacks	371	PER FLTS CR–RTS SCH
* * * * *	*	*
PER Parcels—Carrier Route:		
* * * * *	*	*
5-digit carrier routes sacks	396	PER IRREG CR–RTS
5-digit scheme car. rts. sacks	399	PER IRREG CR–RTS SCH
* * * * *	*	*
Periodicals (News)		
* * * * *	*	*
NEWS Flats—Carrier Route:		
* * * * *	*	*
5-digit carrier routes sacks	486	NEWS FLTS CR–RTS
5-digit scheme car. rts. sacks	471	NEWS FLTS CR–RTS SCH
* * * * *	*	*
NEWS Parcels—Carrier Route:		
* * * * *	*	*
5-digit carrier routes sacks	496	NEWS IRREG CR–RTS
5-digit scheme car. rts. sacks	499	NEWS IRREG CR–RTS SCH
* * * * *	*	*
Standard Mail (A)		
* * * * *	*	*
Enhanced Carrier Route Flats—Nonautomation:		
* * * * *	*	*
5-digit carrier routes sacks	586	STD FLTS CR–RTS
5-digit scheme car. rts. sacks	529	STD FLTS CR–RTS SCH
* * * * *	*	*

M033 Sacks And Trays

1.0 BASIC STANDARDS

* * * * *

1.7 Origin/Entry 3-Digit/Scheme Trays and Sacks

[Amend the first sentence in M033.1.7 to refer to preparation of 5-digit carrier routes trays and sacks, optional 5-digit scheme carrier routes sacks for Periodicals and Standard Mail (A), and 3-digit carrier routes trays, as follows:]

Except for flat-size and irregular parcel-size Periodicals under 1.8, after all carrier route, 5-digit carrier routes (and where permitted, 5-digit scheme carrier routes and 3-digit carrier routes), 5-digit (and, where permitted, 5-digit scheme), 3-digit (and, where permitted, 3-digit scheme) sacks/trays are prepared * * *

1.8 Periodicals Flats and Irregular Parcels Origin/Entry SCF Sacks

[Amend the first sentence in M033.1.8 to refer to preparation of 5-digit carrier routes sacks and optional 5-digit scheme carrier routes sacks for Periodicals, as follows:]

For flat-size and irregular parcel-size Periodicals, after all carrier route, 5-digit carrier routes (and where permitted, 5-digit scheme carrier routes), 5-digit, 3-digit, and required SCF sacks are prepared * * *

* * * * *

M040 Pallets

M041 General Standards

* * * * *

5.0 PREPARATION

[Amend M041.5.1 to indicate that pallet sortation using package reallocation may not always require sorting a mailing to the finest level as follows:]

5.1 Presort

Pallet preparation and pallet sortation are subject to the specific standards in

M045. Pallet sortation is generally intended to presort the palletized portion of a mailing to at least the finest extent required for the corresponding class of mail and method of preparation. Pallet sortation is sequential from the lowest (finest) level to the highest and must be completed at each required level before the next optional or required level is prepared. Standard preparation terms and presort levels for pallets are defined in M011 and M045. For sacks, trays, or machinable parcels on pallets, the mailer must prepare all required pallet levels before any mixed ADC or mixed BMC pallets are prepared for a mailing or job. Packages and bundles prepared under M045 must not be placed on mixed ADC or mixed BMC pallets. Packages and bundles that cannot be placed on pallets must be prepared in sacks under the standards for the rate claimed. The standards for package reallocation (M045.5.0), an optional method of pallet preparation, are designed to retain as much mail as possible at the SCF level and may result in some packages of Periodicals flats and irregular parcels and Standard Mail (A) flats, and irregular parcels that are part of a mailing job that is prepared in part as palletized flats at automation rates, not being placed on the finest level of pallet possible. Mailers must use PAVE-certified presort software to prepare mailings using package reallocation (package reallocation is optional, but, if performed, must be done for the complete mailing job).

5.2 Required Preparation

[Amend M041.5.2 by revising 5.2a to refer to Periodicals and Standard Mail (A) 5-digit pallets prepared under the standards for package reallocation as follows:]

These standards apply to:

a. Periodicals, Standard Mail (A), and Parcel Post (other than BMC Presort, OBMC Presort, DSCF, and DDU rate mail). A pallet must be prepared to a required sortation level when there are 500 pounds of Periodicals or Standard Mail packages, sacks, or parcels or six layers of Periodicals or Standard Mail (A) letter trays. For packages of Periodicals flats and irregular parcels and packages of Standard Mail (A) flats on pallets prepared under the standards for package reallocation (M045.5.0), not all mail for a required 5-digit destination is required to be on a 5-digit pallet or optional 5-digit scheme pallet. Mixed pallets of sacks, trays, or machinable parcels must be labeled to the BMC or ADC (as appropriate) serving the post office where mailings are entered into the mailstream. The processing and distribution manager of that facility may issue a written authorization to the mailer to label mixed BMC or mixed ADC pallets to the post office or processing and distribution center serving the post office where mailings are entered. These pallets contain all mail remaining after required and optional pallets are prepared to finer sortation levels under M045, as appropriate.

* * * * *

6.0 COPALLETIZED, COMBINED, OR MIXED-RATE LEVEL MAILINGS OF FLAT-SIZE PIECES

* * * * *

[Amend M041.6.3 and M041.6.4 to indicate that pallet sortation using package reallocation may not always require sorting a mailing to the finest level, as follows:]

6.3 Periodicals Publications

To combine more than one Periodicals publication on pallets, the mailer must merge and presort copies of all the publications into common packages to achieve the finest presort level for the combined mailing. To copalletize different Periodicals flat-size publications, the mailer must consolidate on pallets all independently sorted packages for each publication to achieve the finest presort level for the mailing. A combined or copalletized mailing prepared under M045.5.0, using package reallocation, may not always result in all packages being placed on the finest pallet level possible. Both combined and copalletized publications must be supported by the documentation required in M045. Preferred Periodicals may be combined with Regular Periodicals only as permitted by standard.

6.4 Standard Mail (A)

To copalletize different Standard Mail (A) flat-size mailings, the mailer must consolidate on pallets all independently sorted packages from each mailing to achieve the finest presort level for the mailing, except that a copalletized mailing prepared under M045.5.0, using package reallocation, may not always result in all packages being placed on the finest pallet level possible. At the time of mailing, the mailer must present computer-generated listings required in M045 that include a summary list consolidating the copalletized multiple mailings and a list of the contents of each pallet by ZIP Code and presort level.

* * * * *

M045 Palletized Mailings

* * * * *

4.0 PALLET PRESORT AND LABELING

[Amend the title of M045.4.1 to indicate that it also refers to trays on pallets, as follows:]

4.1 Packages, Bundles, Sacks, or Trays

[Amend M045.4.1 by revising 4.1a and adding new 4.1b to provide an optional 5-digit/scheme sort for packages of Periodicals and Standard Mail (A) flats; redesignate M045.4.1b through M0454.1e as M045.4.1c through M045.4.1f, as follows:]

Preparation sequence and Line 1 labeling:

a. 5-digit: required for sacks; required for packages and bundles except for packages and bundles prepared under b; optional for trays; for Line 1, use 5-digit ZIP Code destination of contents.

b. 5-digit/scheme: optional for Periodicals and Standard Mail (A) packages and bundles; for Line 1 for 5-digit pallets, use 5-digit ZIP Code destination of contents; for Line 1 for 5-digit scheme pallets, use L001, column B.

* * * * *

4.4 Line 2

[Amend M045.4.4 to require ''SCHEME'' or ''SCH'' to appear on 5-digit scheme pallets of Periodicals or Standard Mail (A), as follows:]

Line 2, class of mail (shown below, as appropriate), processing category and mail type (e.g., ''MACH,'' ''LTRS BC''), ''SCHEME'' or ''SCH'' for 5-digit scheme pallets of Periodicals or Standard Mail (A), and any processing code required by the applicable labeling list under 4.1, 4.2, and 4.3:

* * * * *

[Add new section M045.5.0 to specify preparation requirements for package reallocation; and redesignate sections M045.5.0 through M045.13.0, as M045.6.0 through M045.14.0, respectively, as follows:]

5.0 PACKAGE REALLOCATION FOR PERIODICALS FLATS AND IRREGULAR PARCELS AND STANDARD MAIL (A) FLATS ON PALLETS

5.1 Basic Standards

Package reallocation is an optional preparation method (if performed, package reallocation must be done for the complete mailing job); only PAVE-certified presort software may be used to create pallets under the standards in 5.2 through 5.4. The software will determine if mail for an SCF service area would fall beyond the SCF level if all required 5-digit or optional 5-digit/

scheme pallets and optional 3-digit pallets are prepared. Reallocation is performed only when there is mail for the SCF service area that would fall beyond the SCF pallet level (e.g., to an ADC or BMC pallet). The amount of mail required to bring the mail that would fall beyond the SCF level back to an SCF level pallet level is the minimum volume that will be reallocated, where possible.

5.2 General Reallocation Rules

Reallocation rules:

a. Package preparation is not affected by the reallocation process. Reallocate only complete packages and only the minimum number of packages necessary to create an SCF pallet meeting the minimum pallet weight. Based on the weight of individual pieces within a package and packaging parameters, the weight of mail that is reallocated may be slightly more than the minimum volume required to create an SCF pallet.

b. Reallocate packages from the highest available pallet level possible. If it is not possible to reallocate some mail from a 3-digit pallet first, then attempt to eliminate a 3-digit pallet and reallocate all mail from that pallet to create an SCF pallet; if mail cannot be reallocated from a 3-digit pallet, then attempt to reallocate some mail from a 5-digit or 5-digit scheme pallet.

c. The reallocation process may result in the elimination of a 3-digit pallet to create an SCF pallet, but a 5-digit or 5-digit scheme pallet (when 5-digit scheme pallets are prepared) may not be eliminated in order to create an SCF pallet.

d. When reallocating mail to create an SCF pallet, reallocate mail from only one more finely sorted pallet. This may be accomplished by reallocating a portion of a 3-digit pallet, reallocating all mail from a 3-digit pallet, or reallocating a portion of a 5-digit or 5-digit scheme pallet following the sequence in 5.2b.

e. Mailers may use any minimum pallet weight(s) permitted by DMM standards and may use different minimum weights for different pallet levels in conjunction with package reallocation.

5.3 Reallocation of Packages if Optional 3-Digit Pallets Are Prepared

Reallocation rules:

a. Attempt to identify a 3-digit pallet of adequate weight that can support reallocation of one or more packages to bring the mail that has fallen through the SCF level back to the SCF level without eliminating the pallet. A sufficient volume of mail must remain on the 3-digit pallet after reallocation to meet the 3-digit pallet weight minimum established by the mailer in compliance with applicable DMM standards. If a 3-digit pallet of adequate weight is available, create an SCF pallet by combining the reallocated mail from the 3-digit pallet with the mail that would fall beyond the SCF pallet level.

b. If no single 3-digit pallet within the SCF service area contains an adequate volume of mail to allow reallocation of a portion of the mail on a pallet as described in the previous step, then eliminate one 3-digit pallet and reallocate all of the mail to create an SCF pallet by combining it with the mail that would fall beyond the SCF pallet level. The result will be that the software will not prepare one 3-digit pallet for the SCF service area if it is detrimental to the SCF pallet.

c. If there are no 3-digit pallets, attempt to identify a 5-digit or 5-digit scheme pallet of adequate weight to support reallocation of one or more packages to bring the mail that would fall beyond the SCF pallet level back to the SCF level. A sufficient volume of mail must remain on the 5-digit or 5-digit scheme pallet after reallocation to meet the pallet weight minimum established by the mailer in compliance with applicable DMM standards. If a 5-digit or 5-digit scheme pallet of adequate weight is available, create an SCF pallet by combining the reallocated packages with the mail that would fall beyond the SCF pallet level.

d. If no single 5-digit or 5-digit scheme pallet within the SCF service area contains an adequate volume of mail to allow reallocation of a portion of the mail on a pallet as described in c, then no packages will be reallocated and an SCF pallet will not be prepared; the mail that falls beyond the SCF pallet level must be placed on the appropriate level pallet (ADC or BMC) or in the appropriate level sack.

5.4 Reallocation of Packages if Optional 3-Digit Pallets Are Not Prepared

Reallocation rules:

a. Attempt to identify a 5-digit or 5-digit scheme pallet of adequate weight to support reallocation of one or more packages to bring the mail that would fall beyond the SCF pallet level back to the SCF level. A sufficient volume of mail must remain on the 5-digit or 5-digit scheme pallet after reallocation to meet the pallet weight minimum established by the mailer in compliance with applicable DMM standards. If a 5-digit or 5-digit scheme pallet of adequate weight is available, create an SCF pallet by combining the reallocated packages with the mail that would fall beyond the SCF pallet level.

b. If no single 5-digit or 5-digit scheme pallet within the SCF service area contains an adequate volume of mail to allow reallocation of a portion of the mail on a pallet as described in a, then no packages will be reallocated and an SCF pallet will not be prepared; the mail that falls beyond the SCF pallet level must be placed on the appropriate level pallet (ADC or BMC) or in the appropriate level sack.

5.5 Documentation

Mailings must be supported by documentation produced by PAVE-certified software meeting the standards in P012.

6.0 PALLETS OF PACKAGES, BUNDLES, AND TRAYS OF LETTER-SIZE MAIL

[Amend redesignated 6.1 and 6.2 by revising the second section of each section to indicate that automation rate and nonautomation rate mail must be placed on separate 5-digit scheme pallets, as follows:]

6.1 * * * Automation rate and nonautomation rate pieces must be placed on separate 5-digit and 5-digit scheme pallets. * * *

6.2 * * * Automation rate and nonautomation rate pieces must be placed on separate 5-digit and 5-digit scheme pallets, except that upgradable pieces prepared under M610 may be placed on 5-digit pallets with automation rate pieces. * * *

* * * * *

M200 Periodicals (Nonautomation)

1.0 BASIC STANDARDS

* * * * *

1.5 Low Volume Packages and Sacks

[Amend M200.1.5 by revising reference to ''3.1a through 3.1e'' to read ''3.1a through 3.1f'', as follows:]

As a general exception to 2.4b through 2.4d and 3.1a through 3.1f, * * *

* * * * *

3.0 SACK PREPARATION (FLAT-SIZE PIECES AND IRREGULAR PARCELS)

3.1 Sack Preparation

[Amend M200.3.1 by revising 3.1b and adding new 3.1c to provide an optional 5-digit/scheme carrier routes sort for flats and irregular parcels; redesignate M200.3.1c through M200.3.1g as M200.3.1d through M200.3.1h, as follows:]

Sack size, preparation sequence, and Line 1 labeling:

* * * * *

b. 5-digit carrier routes (carrier routes packages only): required for rate eligibility (no minimum) unless sacks are prepared under c; for Line 1, use 5-digit ZIP Code destination of packages, preceded for military mail by the prefixes under M031.

c. 5-digit/scheme carrier routes (carrier route packages only): required at 24 pieces, optional with one six-piece package minimum except under 1.5; for Line 1 for 5-digit carrier routes sacks, use 5-digit ZIP Code destination of packages, preceded for military mail by the prefixes under M031; for Line 1 for 5-digit scheme carrier routes sacks, use L001, column B.

* * * * *

3.2 Sack Line 2

[Amend M200.3.2 by adding new 3.2e for 5-digit scheme carrier routes sacks; and redesignate M200.3.2e through M200.3.2h as M200.3.2f through M200.3.2i, respectively, as follows:]

* * * * *

e. 5-digit scheme car. rts.: ''CR-RTS SCH''

* * * * *

M600 Standard Mail (Nonautomation)

* * * * *

M620 Enhanced Carrier Route Standard Mail

* * * * *

4.0 SACK PREPARATION—FLAT-SIZE PIECES AND IRREGULAR PARCELS

* * * * *

4.2 Sack Preparation

[Amend M620.4.2 by revising 4.2b and adding new 4.2c, as follows:]

Sack size, preparation sequence, and Line 1 labeling:

* * * * *

b. 5-digit carrier routes: required (no minimum); for irregular parcels; for Line 1, use 5-digit ZIP Code destination of packages, preceded for military mail by the prefixes under M031.

c. 5-digit/scheme carrier routes: required (no minimum) for flats; for Line 1, for 5-digit sacks, use 5-digit ZIP Code destination of packages, preceded for military mail by the prefixes under M031; for Line 1 for 5-digit scheme sacks, use L001, column B.

4.3 Sack Line 2

[Amend M620.4.3 by adding new 4.3e for 5-digit scheme carrier routes sacks, as follows:]

* * * * *

e. 5-digit scheme car. rts.: ''CR-RTS SCH''

* * * * *

P Postage And Payment Methods

P000 Basic Information

* * * * *

P012 Documentation

* * * * *

2.0 STANDARDIZED DOCUMENTATION—FIRST-CLASS MAIL, PERIODICALS, AND STANDARD MAIL (A)

* * * * *

2.2 Format and Content

[Amend P012.2.2d by revising 2.2d(4) to add standards for identifying SCF pallets created as a result of package reallocation by adding the following to the end of the section:]

* * * * *

d. For packages on pallets, the body of the listing reporting these required elements:

* * * * *

(4) * * * Document SCF pallets created as a result of package reallocation under M045.5.0 on the USPS Qualification Report by designating the protected SCF pallet with an identifier of ''PSCF.'' This identifier is only required to appear on the USPS Qualification Report; it is not required to appear on pallet labels or on any other mailing documentation.

* * * * *

2.4 Sortation Level

[Amend 2.4 by adding new indicators ''CR5S'' to identify 5-digit carrier routes scheme sacks, ''5DGS'' to identify 5-digit scheme pallets, and ''PSCF'' to identify SCF pallets created as a result of package reallocation under M045.5.0, as follows:]

The actual sortation level (or corresponding abbreviation) is used for the package, tray, sack, or pallet levels required by 2.2 and shown below:

Sortation level	Abbreviation
* * * * *	
5-Digit Carrier Routes	CR5
5-Digit Scheme Carrier Routes (Periodicals flats, Standard Mail (A) flats).	CR5S
5-Digit Scheme (pallets, Periodicals flats and irregular parcels, Standard Mail (A) flats).	5DGS
* * * * *	
SCF (pallets)	N/A
SCF (pallets created from package reallocation).	PSCF
* * * * *	

Stanley F. Mires,

Chief Counsel, Legislative.

[FR Doc. 99–8400 Filed 4–6–99; 8:45 am]

BILLING CODE 7710–12–P

ENVIRONMENTAL PROTECTION AGENCY

40 CFR Part 180

[OPP–300826; FRL–6070–1]

RIN 2070–AB78

Propamocarb Hydrochloride; Extension of Tolerance for Emergency Exemptions

AGENCY: Environmental Protection Agency (EPA).

ACTION: Final rule.

SUMMARY: This regulation extends time-limited tolerances for residues of the fungicide propamocarb hydrochloride in or on tomatoes, tomato puree, and tomato paste at 0.5, 1.0, and 3.0 part per million (ppm), respectively, for an additional 1–year period. These tolerances will expire and are revoked on November 15, 2001. This action is in response to EPA's granting of emergency exemptions under section 18 of the Federal Insecticide, Fungicide, and Rodenticide Act (FIFRA) authorizing use of the pesticide on tomatoes. Section 408(l)(6) of the Federal Food, Drug, and Cosmetic Act requires EPA to establish a time-limited tolerance or exemption from the requirement for a tolerance for pesticide chemical residues in food that will result from the use of a pesticide under an emergency exemption granted by EPA under FIFRA section 18.

DATES: This regulation becomes effective April 7, 1999. Objections and requests for hearings must be received by EPA, on or before June 7, 1999.

ADDRESSES: Written objections and hearing requests, identified by the docket control number [OPP–300826], must be submitted to: Hearing Clerk (1900), Environmental Protection Agency, Rm. M3708, 401 M St., SW., Washington, DC 20460. Fees accompanying objections and hearing requests shall be labeled ''Tolerance Petition Fees'' and forwarded to: EPA Headquarters Accounting Operations Branch, OPP (Tolerance Fees), P.O. Box 360277M, Pittsburgh, PA 15251. A copy of any objections and hearing requests filed with the Hearing Clerk identified by the docket control number, [OPP–300826], must also be submitted to: Public Information and Records Integrity Branch, Information Resources and Services Division (7502C), Office of

Pesticide Programs, Environmental Protection Agency, 401 M St., SW., Washington, DC 20460. In person, bring a copy of objections and hearing requests to Rm. 119, Crystal Mall 2 (CM #2), 1921 Jefferson Davis Hwy., Arlington, VA.

A copy of objections and hearing requests filed with the Hearing Clerk may also be submitted electronically by sending electronic mail (e-mail) to: opp-docket@epa.gov. Copies of electronic objections and hearing requests must be submitted as an ASCII file avoiding the use of special characters and any form of encryption. Copies of objections and hearing requests will also be accepted on disks in WordPerfect 5.1/6.1 or ASCII file format. All copies of electronic objections and hearing requests must be identified by the docket control number [OPP–300826]. No Confidential Business Information (CBI) should be submitted through e-mail. Copies of electronic objections and hearing requests on this rule may be filed online at many Federal Depository Libraries.

FOR FURTHER INFORMATION CONTACT: By mail: Libby Pemberton, Registration Division (7505C), Office of Pesticide Programs, Environmental Protection Agency, 401 M St., SW., Washington, DC 20460. Office location, telephone number, and e-mail address: Rm. 280, CM #2, 1921 Jefferson Davis Hwy., Arlington, VA, 703 308–9364, pemberton.libby@epa.gov.

SUPPLEMENTARY INFORMATION: EPA issued a final rule, published in the **Federal Register** of May 16, 1997 (62 FR 26960) (FRL–5717–5), which announced that on its own initiative under section 408 of the Federal Food, Drug, and Cosmetic Act (FFDCA), 21 U.S.C. 346a and (l)(6), as amended by the Food Quality Protection Act of 1996 (FQPA) (Pub. L. 104–170) it established time-limited tolerances for the residues of propamocarb hydrochloride in or on tomatoes at 0.5 ppm, tomato paste at 3 ppm, and tomato puree at 1 ppm with an expiration date of May 15, 1999. EPA extended the expiration date of these tolerances to November 15, 2000 in the **Federal Register** of June 12, 1998 (63 FR 32134) (FRL–5795–3). EPA established the tolerances because section 408(l)(6) of the FFDCA requires EPA to establish a time-limited tolerance or exemption from the requirement for a tolerance for pesticide chemical residues in food that will result from the use of a pesticide under an emergency exemption granted by EPA under FIFRA section 18. Such tolerances can be established without providing notice or period for public comment.

EPA received a request to extend the use of propamocarb hydrochloride on tomatoes for this year growing season due to continued failure to control immigrant strains of late blight in greenhouse grown tomatoes with registered fungicides. After having reviewed the submission, EPA concurs that emergency conditions exist. EPA has authorized under FIFRA section 18 the use of propamocarb hydrochloride on greenhouse grown tomatoes for control of late blight in Arizona and California.

EPA assessed the potential risks presented by residues of propamocarb hydrochloride in or on tomatoes. In doing so, EPA considered the safety standard in FFDCA section 408(b)(2), and decided that the necessary tolerance under FFDCA section 408(l)(6) would be consistent with the safety standard and with FIFRA section 18. The data and other relevant material have been evaluated and discussed in the final rule of May 16, 1997. Based on that data and information considered, the Agency reaffirms that extension of the time-limited tolerance will continue to meet the requirements of section 408(l)(6). Therefore, the time-limited tolerances are extended for an additional 1-year period. EPA will publish a document in the **Federal Register** to remove the revoked tolerance from the Code of Federal Regulations (CFR). Although this tolerance will expire and is revoked on November 15, 2001, under FFDCA section 408(l)(5), residues of the pesticide not in excess of the amounts specified in the tolerances remaining in or on tomatoes, tomato paste and tomato puree after that date will not be unlawful, provided the pesticide is applied in a manner that was lawful under FIFRA and the application occurred prior to the revocation of the tolerances. EPA will take action to revoke these tolerances earlier if any experience with, scientific data on, or other relevant information on this pesticide indicate that the residues are not safe.

I. Objections and Hearing Requests

The new FFDCA section 408(g) provides essentially the same process for persons to ''object'' to a tolerance regulation as was provided in the old section 408 and in section 409. However, the period for filing objections is 60 days, rather than 30 days. EPA currently has procedural regulations which govern the submission of objections and hearing requests. These regulations will require some modification to reflect the new law. However, until those modifications can be made, EPA will continue to use those procedural regulations with appropriate adjustments to reflect the new law.

Any person may, by June 7, 1999, file written objections to any aspect of this regulation and may also request a hearing on those objections. Objections and hearing requests must be filed with the Hearing Clerk, at the address given under the ''ADDRESSES'' section (40 CFR 178.20). A copy of the objections and/or hearing requests filed with the Hearing Clerk should be submitted to the OPP docket for this rulemaking. The objections submitted must specify the provisions of the regulation deemed objectionable and the grounds for the objections (40 CFR 178.25). Each objection must be accompanied by the fee prescribed by 40 CFR 180.33(i). EPA is authorized to waive any fee requirement ''when in the judgement of the Administrator such a waiver or refund is equitable and not contrary to the purpose of this subsection.'' For additional information regarding tolerance objection fee waivers, contact James Tompkins, Registration Division (7505C), Office of Pesticide Programs, Environmental Protection Agency, 401 M St., SW., Washington, DC 20460. Office location, telephone number, and e-mail address: Rm. 239, CM #2, 1921 Jefferson Davis Hwy., Arlington, VA, (703) 305-5697, tompkins.jim@epa.gov. Requests for waiver of tolerance objection fees should be sent to James Hollins, Information Resources and Services Division (7502C), Office of Pesticide Programs, Environmental Protection Agency, 401 M St., SW., Washington, DC 20460.

If a hearing is requested, the objections must include a statement of the factual issues on which a hearing is requested, the requestor's contentions on such issues, and a summary of any evidence relied upon by the requestor (40 CFR 178.27). A request for a hearing will be granted if the Administrator determines that the material submitted shows the following: There is genuine and substantial issue of fact; there is a reasonable possibility that available evidence identified by the requestor would, if established, resolve one or more of such issues in favor of the requestor, taking into account uncontested claims or facts to the contrary; and resolution of the factual issues in the manner sought by the requestor would be adequate to justify the action requested (40 CFR 178.32). Information submitted in connection with an objection or hearing request may be claimed confidential by marking any part or all of that information as CBI. Information so marked will not be disclosed except in accordance with procedures set forth in 40 CFR part 2.

A copy of the information that does not contain CBI must be submitted for inclusion in the public record. Information not marked confidential may be disclosed publicly by EPA without prior notice.

II. Public Record and Electronic Submissions

EPA has established a record for this regulation under docket control number [OPP–300826] (including any comments and data submitted electronically). A public version of this record, including printed, paper versions of electronic comments, which does not include any information claimed as CBI, is available for inspection from 8:30 a.m. to 4 p.m., Monday through Friday, excluding legal holidays. The public record is located in Rm. 119 of the Public Information and Records Integrity Branch, Information Resources and Services Division (7502C), Office of Pesticide Programs, Environmental Protection Agency, CM #2, 1921 Jefferson Davis Hwy., Arlington, VA.

Objections and hearing requests may be sent by e-mail directly to EPA at:

opp-docket@epa.gov.

E-mailed objections and hearing requests must be submitted as an ASCII file avoiding the use of special characters and any form of encryption.

The official record for this regulation, as well as the public version, as described in this unit will be kept in paper form. Accordingly, EPA will transfer any copies of objections and hearing requests received electronically into printed, paper form as they are received and will place the paper copies in the official record which will also include all comments submitted directly in writing. The official record is the paper record maintained at the Virginia address in ''ADDRESSES'' at the beginning of this document.

III. Regulatory Assessment Requirements

A. Certain Acts and Executive Orders

This final rule establishes tolerances under section 408 of the FFDCA. The Office of Management and Budget (OMB) has exempted these types of actions from review under Executive Order 12866, entitled *Regulatory Planning and Review* (58 FR 51735, October 4, 1993). This final rule does not contain any information collections subject to OMB approval under the Paperwork Reduction Act (PRA), 44 U.S.C. 3501 *et seq.*, or impose any enforceable duty or contain any unfunded mandate as described under Title II of the Unfunded Mandates Reform Act of 1995 (UMRA) (Pub. L. 104–4). Nor does it require any special considerations as required by Executive Order 12898, entitled *Federal Actions to Address Environmental Justice in Minority Populations and Low-Income Populations* (59 FR 7629, February 16, 1994), or require OMB review in accordance with Executive Order 13045, entitled *Protection of Children from Environmental Health Risks and Safety Risks* (62 FR 19885, April 23, 1997).

In addition, since tolerances and exemptions that are established under section 408(l)(6) of FFDCA, such as the tolerance in this final rule, do not require the issuance of a proposed rule, the requirements of the Regulatory Flexibility Act (RFA) (5 U.S.C. 601 *et seq.*) do not apply. Nevertheless, the Agency previously assessed whether establishing tolerances, exemptions from tolerances, raising tolerance levels or expanding exemptions might adversely impact small entities and concluded, as a generic matter, that there is no adverse economic impact. The factual basis for the Agency's generic certification for tolerance actions published on May 4, 1981 (46 FR 24950), and was provided to the Chief Counsel for Advocacy of the Small Business Administration.

B. Executive Order 12875

Under Executive Order 12875, entitled *Enhancing the Intergovernmental Partnership* (58 FR 58093, October 28, 1993), EPA may not issue a regulation that is not required by statute and that creates a mandate upon a State, local or tribal government, unless the Federal government provides the funds necessary to pay the direct compliance costs incurred by those governments. If the mandate is unfunded, EPA must provide to OMB a description of the extent of EPA's prior consultation with representatives of affected State, local, and tribal governments, the nature of their concerns, copies of any written communications from the governments, and a statement supporting the need to issue the regulation. In addition, Executive Order 12875 requires EPA to develop an effective process permitting elected officials and other representatives of State, local, and tribal governments ''to provide meaningful and timely input in the development of regulatory proposals containing significant unfunded mandates.''

Today's rule does not create an unfunded Federal mandate on State, local, or tribal governments. The rule does not impose any enforceable duties on these entities. Accordingly, the requirements of section 1(a) of Executive Order 12875 do not apply to this rule.

C. Executive Order 13084

Under Executive Order 13084, entitled *Consultation and Coordination with Indian Tribal Governments* (63 FR 27655, May 19, 1998), EPA may not issue a regulation that is not required by statute, that significantly or uniquely affects the communities of Indian tribal governments, and that imposes substantial direct compliance costs on those communities, unless the Federal government provides the funds necessary to pay the direct compliance costs incurred by the tribal governments. If the mandate is unfunded, EPA must provide OMB, in a separately identified section of the preamble to the rule, a description of the extent of EPA's prior consultation with representatives of affected tribal governments, a summary of the nature of their concerns, and a statement supporting the need to issue the regulation. In addition, Executive Order 13084 requires EPA to develop an effective process permitting elected officials and other representatives of Indian tribal governments ''to provide meaningful and timely input in the development of regulatory policies on matters that significantly or uniquely affect their communities.''

Today's rule does not significantly or uniquely affect the communities of Indian tribal governments. This action does not involve or impose any requirements that affect Indian tribes. Accordingly, the requirements of section 3(b) of Executive Order 13084 do not apply to this rule.

IV. Submission to Congress and the Comptroller General

The Congressional Review Act, 5 U.S.C. 801 *et seq.*, as added by the Small Business Regulatory Enforcement Fairness Act of 1996, generally provides that before a rule may take effect, the Agency promulgating the rule must submit a rule report, which includes a copy of the rule, to each House of the Congress and the Comptroller General of the United States. EPA will submit a report containing this rule and other required information to the U.S. Senate, the U.S. House of Representatives and the Comptroller General of the United States prior to publication of the rule in the **Federal Register**. This rule is not a ''major rule'' as defined by 5 U.S.C. 804(2).

List of Subjects in 40 CFR Part 180

Environmental protection, Administrative practice and procedure, Agricultural commodities, Pesticides

and pests, Reporting and recordkeeping requirements.

Dated: March 25, 1999.

James Jones,

Director, Registration Division, Office of Pesticide Programs.

Therefore, 40 CFR chapter I is amended as follows:

PART 180—[AMENDED]

1. The authority citation for part 180 continues to read as follows:

Authority: 21 U.S.C. 321(q), 346(a), and 371.

§ 180.499 [Amended]

2. In § 180.499, by amending paragraph (b) by revising the date ''11/15/00'' to read ''11/15/01''.

[FR Doc. 99–8339 Filed 4–6–99; 8:45 am]

BILLING CODE 6560–50–F

ENVIRONMENTAL PROTECTION AGENCY

40 CFR Part 180

[OPP–300825; FRL–6070–6]

RIN 2070–AB78

Avermectin; Pesticide Tolerances for Emergency Exemptions

AGENCY: Environmental Protection Agency (EPA).

ACTION: Final rule.

SUMMARY: This regulation establishes a time-limited tolerance for combined residues of avermectin in or on avocado. This action is in response to EPA's granting of an emergency exemption under section 18 of the Federal Insecticide, Fungicide, and Rodenticide Act authorizing use of the pesticide on avocado. This regulation establishes a maximum permissible level for residues of avermectin B_1 and its delta-8,9-isomer in this food commodity pursuant to section 408(l)(6) of the Federal Food, Drug, and Cosmetic Act, as amended by the Food Quality Protection Act of 1996. The tolerance will expire and is revoked on September 30, 2000.

DATES: This regulation is effective April 7, 1999. Objections and requests for hearings must be received by EPA on or before June 7, 1999.

ADDRESSES: Written objections and hearing requests, identified by the docket control number [OPP–300825], must be submitted to: Hearing Clerk (1900), Environmental Protection Agency, Rm. M3708, 401 M St., SW., Washington, DC 20460. Fees accompanying objections and hearing requests shall be labeled ''Tolerance Petition Fees'' and forwarded to: EPA Headquarters Accounting Operations Branch, OPP (Tolerance Fees), P.O. Box 360277M, Pittsburgh, PA 15251. A copy of any objections and hearing requests filed with the Hearing Clerk identified by the docket control number, [OPP–300825], must also be submitted to: Public Information and Records Integrity Branch, Information Resources and Services Division (7502C), Office of Pesticide Programs, Environmental Protection Agency, 401 M St., SW., Washington, DC 20460. In person, bring a copy of objections and hearing requests to Rm. 119, Crystal Mall #2, 1921 Jefferson Davis Hwy., Arlington, VA.

A copy of objections and hearing requests filed with the Hearing Clerk may also be submitted electronically by sending electronic mail (e-mail) to: opp-docket@epa.gov. Copies of electronic objections and hearing requests must be submitted as an ASCII file avoiding the use of special characters and any form of encryption. Copies of objections and hearing requests will also be accepted on disks in WordPerfect 5.1/6.1 or ASCII file format. All copies of electronic objections and hearing requests must be identified by the docket control number [OPP–300825]. No Confidential Business Information (CBI) should be submitted through e-mail. Copies of electronic objections and hearing requests on this rule may be filed online at many Federal Depository Libraries.

FOR FURTHER INFORMATION CONTACT: By mail: Jacqueline E. Gwaltney, Registration Division (7505C), Office of Pesticide Programs, Environmental Protection Agency, 401 M St., SW., Washington, DC 20460. Office location, telephone number, and e-mail address: Rm. 278 Crystal Mall #2, 1921 Jefferson Davis Hwy., Arlington, VA, 703/305–6792, gwaltney.jackie@epa.gov.

SUPPLEMENTARY INFORMATION: EPA, on its own initiative, pursuant to sections 408 and (l)(6) of the Federal Food, Drug, and Cosmetic Act (FFDCA), 21 U.S.C. 346a and (l)(6), is establishing a tolerance for combined residues of the fungicide, in or on avocado at 0.02 ppm part per million (ppm). This tolerance will expire and is revoked on September 30, 2000. EPA will publish a document in the **Federal Register** to remove the revoked tolerance from the Code of Federal Regulations.

I. Background and Statutory Findings

The Food Quality Protection Act of 1996 (FQPA) (Pub. L. 104–170) was signed into law August 3, 1996. FQPA amends both the Federal Food, Drug, and Cosmetic Act (FFDCA), 21 U.S.C. 301 *et seq.*, and the Federal Insecticide, Fungicide, and Rodenticide Act (FIFRA), 7 U.S.C. 136 *et seq.* The FQPA amendments went into effect immediately. Among other things, FQPA amends FFDCA to bring all EPA pesticide tolerance-setting activities under a new section 408 with a new safety standard and new procedures. These activities are described in this preeamble and discussed in greater detail in the final rule establishing the time-limited tolerance associated with the emergency exemption for use of propiconazole on sorghum (61 FR 58135, November 13, 1996) (FRL–5572–9).

New section 408(b)(2)(A)(i) of the FFDCA allows EPA to establish a tolerance (the legal limit for a pesticide chemical residue in or on a food) only if EPA determines that the tolerance is ''safe.'' Section 408(b)(2)(A)(ii) defines ''safe'' to mean that ''there is a reasonable certainty that no harm will result from aggregate exposure to the pesticide chemical residue, including all anticipated dietary exposures and all other exposures for which there is reliable information.'' This includes exposure through drinking water and in residential settings, but does not include occupational exposure. Section 408(b)(2)(C) requires EPA to give special consideration to exposure of infants and children to the pesticide chemical residue in establishing a tolerance and to ''ensure that there is a reasonable certainty that no harm will result to infants and children from aggregate exposure to the pesticide chemical residue. . . .''

Section 18 of FIFRA authorizes EPA to exempt any Federal or State agency from any provision of FIFRA, if EPA determines that ''emergency conditions exist which require such exemption.'' This provision was not amended by FQPA. EPA has established regulations governing such emergency exemptions in 40 CFR part 166.

Section 408(l)(6) of the FFDCA requires EPA to establish a time-limited tolerance or exemption from the requirement for a tolerance for pesticide chemical residues in food that will result from the use of a pesticide under an emergency exemption granted by EPA under section 18 of FIFRA. Such tolerances can be established without providing notice or period for public comment.

Because decisions on section 18-related tolerances must proceed before EPA reaches closure on several policy issues relating to interpretation and

implementation of the FQPA, EPA does not intend for its actions on such tolerances to set binding precedents for the application of section 408 and the new safety standard to other tolerances and exemptions.

II. Emergency Exemption for Avermectin on Avocado and FFDCA Tolerances

California submitted information to EPA that indicates that the avocado thrip (*Scirthothrips perseae*) poses a significant threat to the profitable production of avocado. Avocado affected by avocado thrip can be rendered unmarketable because it causes severe scarring and damage to small avocado fruit, fruit stems and tender leaf flushes. California determined that the conditions for a avocado thrip outbreak were favorable and invoked its authorities under 40 CFR 166.40 to declare a crisis situation. After considering the implications connected with the use of this pesticide under a crisis situation, EPA is establishing this tolerance for the use of avermectin on avocado for the control of avocado thrips in California.

EPA has authorized under FIFRA section 18 the use of avermectin on avocado for control of avocado thrips in California. After having reviewed the submission, EPA concurs that emergency conditions exist for this state.

As part of its assessment of this emergency exemption, EPA assessed the potential risks presented by residues of avermectin in or on avocado . In doing so, EPA considered the safety standard in FFDCA section 408(b)(2), and EPA decided that the necessary tolerance under FFDCA section 408(l)(6) would be consistent with the safety standard and with FIFRA section 18. Consistent with the need to move quickly on the emergency exemption in order to address an urgent non-routine situation and to ensure that the resulting food is safe and lawful, EPA is issuing this tolerance without notice and opportunity for public comment under section 408(e), as provided in section 408(l)(6). Although this tolerance will expire and is revoked on September 30, 2000, under FFDCA section 408(l)(5), residues of the pesticide not in excess of the amounts specified in the tolerance remaining in or on avocado after that date will not be unlawful, provided the pesticide is applied in a manner that was lawful under FIFRA, and the residues do not exceed a level that was authorized by this tolerance at the time of that application. EPA will take action to revoke this tolerance earlier if any experience with, scientific data on, or other relevant information on this pesticide indicate that the residues are not safe.

Because this tolerance is being approved under emergency conditions EPA has not made any decisions about whether avermectin meets EPA's registration requirements for use on avocado or whether a permanent tolerance for this use would be appropriate. Under these circumstances, EPA does not believe that this tolerance serves as a basis for registration of avermectin by a State for special local needs under FIFRA section 24(c). Nor does this tolerance serve as the basis for any State other than California to use this pesticide on this crop under section 18 of FIFRA without following all provisions of EPA's regulations implementing section 18 as identified in 40 CFR part 166. For additional information regarding the emergency exemption for avermectin, contact the Agency's Registration Division at the address provided under the ''ADDRESSES'' section.

III. Aggregate Risk Assessment and Determination of Safety

EPA performs a number of analyses to determine the risks from aggregate exposure to pesticide residues. For further discussion of the regulatory requirements of section 408 and a complete description of the risk assessment process, see the final rule on Bifenthrin Pesticide Tolerances (62 FR 62961, November 26, 1997) (FRL–5754–7) .

Consistent with section 408(b)(2)(D), EPA has reviewed the available scientific data and other relevant information in support of this action. EPA has sufficient data to assess the hazards of avermectin and to make a determination on aggregate exposure, consistent with section 408(b)(2), for a time-limited tolerance for combined residues of avermectin on avocado at 0.02ppm. EPA's assessment of the dietary exposures and risks associated with establishing the tolerance follows.

A. Toxicological Profile

EPA has evaluated the available toxicity data and considered its validity, completeness, and reliability as well as the relationship of the results of the studies to human risk. EPA has also considered available information concerning the variability of the sensitivities of major identifiable subgroups of consumers, including infants and children. The nature of the toxic effects caused by avermectin are discussed in this unit.

B. Toxicological Endpoint

1. *Acute toxicity*. The acute dietary Reference Dose (RfD) is 0.0025 mg/kg from a 1–year dog study. The no observed adverse effect level (NOAEL) is 0.25 mg/kg/day, and the lowest observed adverse effect level (LOAEL) is 0.50 mg/kg/day based on mydriasis (pupil dilation) which was observed after one week of dosing. An uncertainty factor of 100 to account for interspecies extrapolation (10x) and intraspecies variability (10x) was recommended (Hazard Identification Assessment Review Committee (HIARC), 7/28/98).

2. *Short- and intermediate-term toxicity*. Short- and intermediate-term dermal NOAELs of 0.25 mg/kg/day based on mydriasis after one week of dosing in a 1–year dog study. Dermal absorption is considered to be 1%. Short- and intermediate-term inhalation NOAEL is a route-to-route extrapolation from the oral NOAEL of 0.25 mg/kg/day based on mydriasis after one week of dosing in a 1–year dog study. Oral and inhalation absorption are both assumed to be 100% (HIARC, 7/28/98).

3. *Chronic toxicity*. EPA has established the RfD for avermectin at 0.0012 milligrams/kilogram/day (mg/kg/day) from a 2–generation reproduction study in rats. The developmental NOAEL is 0.12 mg/kg/day, and the developmental LOAEL is 0.40 mg/kg/day based on decreased pup body weight and viability during lactation, and increased incidence of retinal rosettes in F2b weanlings. An uncertainty factor of 100 to account for interspecies extrapolation (10x) and intraspecies variability(10x) was recommended.

4. *Long-term*. Long-term dermal NOAEL of 0.12 mg/kg/day based on decreased pup body weight and viability during lactation, and increased incidence of retinal rosettes in F2b weanlings in a 2–generation reproduction study in rats. Dermal absorption is considered to be 1% (HIARC, 7/28/98).

Long-term inhalation NOAEL is a route-to-route extrapolation from the oral NOAEL of 0.12 mg/kg/day based on decreased pup body weight and viability during lactation, and increased incidence of retinal rosettes in F2b weanlings in a 2–generation reproduction study in rats. Oral and inhalation absorption are both assumed to be 100% (HIARC, 7/28/98).

5. *Carcinogenicity*. At its July 27, 1996 meeting, the EPA RfD/Peer Review Committee classified avermectin as a Cancer Group E chemical based on the absence of significant tumor increases in two adequate rodent carcinogenicity

studies. On July 28, 1998 the HIARC retained this classification. This assessment is not required.

C. Exposures and Risks

1. *From food and feed uses.* Tolerances have been established (40 CFR 180.449) for the combined residues of avermectin, in or on a variety of raw agricultural commodities. Risk assessments were conducted by EPA to assess dietary exposures and risks from avermectin as follows:

i. *Acute exposure and risk.* Acute dietary risk assessments are performed for a food-use pesticide if a toxicological study has indicated the possibility of an effect of concern occurring as a result of a 1–day or single exposure. The avermectin acute (food only) exposure analysis was recently completed in conjunction with the section 3 human health risk assessment on grapes and peppers. The analysis included avocados at the recommended time-limited tolerance of 0.02 ppm. The risk estimate should be viewed as highly refined. Additional refinement would be unlikely to reduce risk estimates significantly. In making a safety determination for this tolerance, EPA is taking into account this refined exposure assessment. The resulting calculations are presented below at the 99.9th percentile as either a percent of the acute population adjusted dose (%PAD) or percent RfD (%RfD) depending on the population. EPA is generally concerned with acute exposures that exceed 100% of the acute RfD(aRfD)/PAD.

Subgroup	ARC (mg/kg)	Percent Population adjusted dose	Percent Reference dose
U.S. population	0.000086	35%PAD	
Children (1–6 years)	0.000176	70	
Females (13+/nursing)	0.000095	38	
Males (13–19 years)	0.000048		2

ii. *Chronic exposure and risk.* The avermectin chronic (food only) exposure analysis was recently completed in conjunction with the section 3 human health risk assessment on grapes and peppers. The analysis included avocados at the recommended time-limited tolerance of 0.02 ppm. In conducting this chronic dietary risk assessment, EPA has made somewhat conservative assumptions -- anticipated residues and percent crop-treated data were used for selected crops -- which result in an overestimate of human dietary exposure. This chronic dietary (food only) exposure should be viewed as a partially refined risk estimate; further refinement using additional percent crop-treated values would result in a lower dietary exposure estimate. Thus, in making a safety determination for this tolerance, EPA is taking into account this partially refined exposure assessment. EPA is generally concerned with chronic exposures that exceed 100% of the chronic RfD/PAD. The existing avermectin tolerances (published, pending and new) result in an ARC that is equivalent to the following percentages of the RfD or PAD:

Subgroup	ARC_{FOOD}	Percent Population adjusted dose	Percent Reference dose
U.S. Population	0.000008	7	
Non-nursing infants (< 1 year)	0.000023	19	
Females (13+/nursing)	0.000008	6	
Males (20+ years)	0.000008		< 1

2. *From drinking water.* Modeling data (Generic expected environmental concentration/Screening concentration In Ground Water (GENEEC/SCIGROW)) indicate worst case estimated environmental concentrations (EEC) of 0.485 µg/L avermectin for acute and 0.239 µg/L for chronic exposure, both in surface water from the same use of avermectin on strawberries (the maximum use rate on the label). Refined modeling data Pesticide Root Zone Model-Exposure Analysis Modeling System (PRZM—EXAM) indicate a worst case EEC of 0.88 µg/L for acute and 0.57 µg/L for chronic, both calculated for an avermectin use on strawberries grown on black plastic mulch. EPA notes that the certainty of the concentrations estimated for strawberries is low, due to uncertainty on the amount of runoff from plant beds covered in plastic mulch and uncertainty on the amount of degradation of avermectin on black plastic compared to soil.

EPA believes the estimates of avermectin exposure in water derived from the PRZM-EXAMS model are significantly overstated for several reasons. The PRZM-EXAMS model was designed to estimate exposure from ecological risk assessments and thus uses a scenario of a body of water approximating the size of a 1 hectare (2.5 acres) pond. This tends to overstate drinking water exposure levels for the following reasons. First, surface water source drinking water generally comes from bodies of water that are substantially larger than a 1 hectare (2.5 acres) pond. Second, the modeled scenario also assumes that essentially the whole basin receives an application of the pesticide. Yet in virtually all cases, basins large enough to support a drinking water facility will contain a substantial fraction of the area which does not receive pesticide. Third, there is often at least some flow (in a river) or turnover (in a reservoir or lake) of the water so the persistence of the pesticide near the drinking water facility is usually overestimated. Fourth, even assuming a reservoir is directly adjacent to an agricultural field, the agricultural field may not be used to grow a crop on

which the pesticide in question is registered for use. Fifth, the PRZM-EXAMS modeled scenario does not take into account reductions in residue-loading due to applications of less than the maximum application rate or no treatment of the crop at all (percent crop treated data). Although there is a high degree of uncertainty to this analysis, these are the best available estimates of concentrations of avermectin in drinking water.

3. *From non-dietary exposure.* The avermectin non-dietary exposure analysis was recently completed in conjunction with the section 3 human health risk assessment on grapes and peppers. Avermectin's registered residential uses include indoor crack/crevice and outdoor application to lawns. For lawn uses, a risk assessment was conducted for adult applicators and postapplication exposure to avermectin using the EPA's Draft SOPs for Residential Exposure Assessments (12/18/97). For children's postapplication exposure to avermectin from indoor crack/crevice products, exposure studies were used to estimate risk. Short- and intermediate-term risk for the registered uses do not exceed EPA's level of concern. Chronic exposures for the residential uses are not expected.

i. *Chronic exposure and risk.* Chronic exposures for the residential uses are not expected.

ii. *Short- and intermediate-term exposure and risk.* Risk for the registered uses do not exceed EPA's level of concern.

4. *Cumulative exposure to substances with common mechanism of toxicity.* Section 408(b)(2)(D)(v) requires that, when considering whether to establish, modify, or revoke a tolerance, the Agency consider ''available information'' concerning the cumulative effects of a particular pesticide's residues and ''other substances that have a common mechanism of toxicity.''

EPA does not have, at this time, available data to determine whether avermectin has a common mechanism of toxicity with other substances or how to include this pesticide in a cumulative risk assessment. Unlike other pesticides for which EPA has followed a cumulative risk approach based on a common mechanism of toxicity, avermectin does not appear to produce a toxic metabolite produced by other substances. For the purposes of this tolerance action, therefore, EPA has not assumed that avermectin has a common mechanism of toxicity with other substances. For more information regarding EPA's efforts to determine which chemicals have a common mechanism of toxicity and to evaluate the cumulative effects of such chemicals, see the final rule for Bifenthrin Pesticide Tolerances (62 FR 62961, November 26, 1997).

D. Aggregate Risks and Determination of Safety for U.S. Population

In examining aggregate exposures, FQPA directs EPA to consider available information concerning exposures from the residue in food and all other non-occupational exposures. The primary non-food sources of exposure the Agency looks at include drinking water (whether from ground or surface water), and exposure through pesticide use in gardens, lawns or buildings (residential and other indoor and/or outdoor uses). In evaluating food exposures, EPA takes into account varying consumption patterns of major identifiable subgroups of consumers, including infants and children.

1. *Acute risk.* Acute aggregate exposure takes into account acute dietary food and water exposure. The registrant previously submitted an acute dietary exposure analysis using probabilistic ''Monte Carlo'' modeling. EPA examined the assumptions made in conducting the analysis and some of the residue files for accuracy and found the analysis acceptable after correcting for the current acute RfD, updating %CT data, and correcting concentration factors. EPA recalculated the assessment using the submitted acute file and the correct acute RfD, updated %CT data, correcting the residue files above to use one-half limit of detection (LOD) and one-half limit of quantitation (LOQ) where appropriate, and using the average field trial residue level and previously established processing factors for blended commodities. In addition, EPA's analysis included residues in pear juice for which no data has been previously required. Since all other juices show reductions in avermectin residues from the raw agricultural commodity, EPA used the reduction factor for apples in the analysis. The dietary (food only) acute %PAD ranges from 18% for nursing infants < 1 year old to 70% for children 1–6 yrs. This risk estimate should be viewed as highly refined since it used anticipated residue values and percent crop-treated data in conjunction with Monte Carlo analysis. The acute dietary exposure does not exceed EPA's level of concern. The registrant is reminded that future probabilistic modeling submissions should follow EPA's suggested guidelines (http://www.epa.gov/fedrgstr/EPA-PEST/1998/November/Day-05/o-p29665.htm).

Avermectin is a moderately persistent, but non-mobile compound in soil and water environments. The GENEEC and SCI-GROW modeling data for avermectin in drinking water indicate levels less than OPP's DWLOC for acute exposure. Using the refined PRZM-EXAMS modeling data in drinking water also indicates levels less than OPP's DWLOC for acute exposure, with the exception of children 1–6 years old. EPA notes that the certainty of the concentrations estimated for strawberries in the refined estimates is low, due to uncertainty on the amount of runoff from plant beds covered in plastic mulch and uncertainty on the amount of degradation of avermectin on black plastic compared to soil. Although the peak EEC of 0.88 μg/L slightly exceeds the acute DWLOC (0.74 μg/L, considering the uncertain nature of the modeling estimate, EPA does not expect aggregate acute exposure to avermectin will pose an unacceptable risk to human health.

2. *Chronic risk.* Using the probabilistic ''MonteCarlo'' exposure assumptions described in this unit, EPA has concluded that aggregate exposure to avermectin from food will utilize 7% of the PAD for the U.S. population. The major identifiable subgroup with the highest aggregate exposure is non-nursing infants with 19% of the chronic PAD. No chronic residential exposures are expected from use of avermectin. Avermectin is a moderately persistent, but non-mobile compound in soil and water environments. EPA does not expect aggregate chronic exposure to avermectin will pose an unacceptable risk to human health.

3. *Short- and intermediate-term risk.* Short- and intermediate-term aggregate exposure takes into account chronic dietary food and water (considered to be a background exposure level) plus indoor and outdoor residential exposure.

i. Short-term aggregate exposure takes into account chronic dietary food and water (considered to be a background exposure level) plus short-term residential uses which include dermal, inhalation, and oral exposures. For children's postapplication exposure from crack and crevice uses, the worst case exposure scenario, risks do not exceed EPA's level of concern. The residential uses that were aggregated with chronic dietary food and water are from lawn and crack and crevice uses and include:

• ADULT dermal exposure from the highest adult residential applicator scenario (3.4E–7 mg/kg/day from belly grinder granular open pour) and crack and crevice applicator scenario (2.1E–8 mg/kg/day) with exposure from postapplication activities (3.0E–6 mg/

kg/day), and inhalation from turf and crack and crevice (3.9E–7 mg/kg/day).

• CHILDREN's oral exposure from turf and crack and crevice hand-to-mouth, with turf incidental ingestion (3.8E–5 mg/kg/day), dermal exposure from turf and crack and crevice (6.1E–6 mg/kg/day), and inhalation exposure from crack and crevice (1.1E–4 mg/kg/day). Using the exposures above, EPA calculated the short-term drinking water level of concerns (DWLOCs). The DWLOC of 8.2 µg/L for the U.S. population is greater than the water EEC's. The DWLOC for infants/children (0.75 µg/L) is slightly exceeded by the PRZM-EXAMS peak value of 0.88 µg/L. However, as noted above for the acute DWLOC, EPA is not concerned given the uncertainty of the estimated water concentrations. EPA does not expect aggregate short-term exposure to avermectin will pose an unacceptable risk to human health.

ii. The worst case intermediate-term exposures to avermectin for adults are the same as those described above for short-term exposures. Using the exposures above, EPA calculated the adult intermediate-term DWLOC of 8.2 µg/L, which is greater than the water EEC's. EPA does not expect aggregate intermediate-term exposure to avermectin will pose an unacceptable risk to adult human health.

iii. The worst case intermediate-term exposures to avermectin for infants and children are the same as those described above. Since the short- and intermediate-term NOAELs are the same, the DWLOC is also equal to the 0.75 µg/L short-term value. Again, given the uncertainty in the 0.88 µg/L PRZM-EXAMS value, EPA is not concerned with the residues in drinking water at this time. EPA does not expect aggregate intermediate-term exposure to avermectin will pose an unacceptable risk to human health.

4. *Aggregate cancer risk for U.S. population*. At its July 27, 1996 meeting, the EPA RfD/Peer Review Committee classified avermectin as a Cancer Group E chemical based on the absence of significant tumor increases in two adequate rodent carcinogenicity studies. This risk assessment was not required.

5. *Determination of safety*. Based on these risk assessments, EPA concludes that there is a reasonable certainty that no harm will result from aggregate exposure to avermectin residues.

E. Aggregate Risks and Determination of Safety for Infants and Children

1. *Safety factor for infants and children*— i. *In general*. In assessing the potential for additional sensitivity of infants and children to residues of avermectin, EPA considered data from developmental toxicity studies in the rat and rabbit and a 2–generation reproduction study in the rat. The developmental toxicity studies are designed to evaluate adverse effects on the developing organism resulting from maternal pesticide exposure during gestation. Reproduction studies provide information relating to effects from exposure to the pesticide on the reproductive capability of mating animals and data on systemic toxicity.

FFDCA section 408 provides that EPA shall apply an additional tenfold margin of safety for infants and children in the case of threshold effects to account for pre- and post-natal toxicity and the completeness of the database unless EPA determines that a different margin of safety will be safe for infants and children. Margins of safety are incorporated into EPA risk assessments either directly through use of a margin of exposure (MOE) analysis or through using uncertainty (safety) factors in calculating a dose level that poses no appreciable risk to humans. EPA believes that reliable data support using the standard MOE and uncertainty factor (usually 100 for combined inter- and intra-species variability) and not the additional tenfold MOE/uncertainty factor when EPA has a complete data base under existing guidelines and when the severity of the effect in infants or children or the potency or unusual toxic properties of a compound do not raise concerns regarding the adequacy of the standard MOE/safety factor.

ii. *Conclusion*. There is a complete toxicity database for avermectin and exposure data is complete or is estimated based on data that reasonably accounts for potential exposures.

2. *Acute risk*. Acute aggregate exposure takes into account acute dietary food and water exposure. The registrant previously submitted an acute dietary exposure analysis using probabilistic ''Monte Carlo'' modeling. EPA examined the assumptions made in conducting the analysis and some of the residue files for accuracy and found the analysis acceptable after correcting for the current acute RfD, updating %CT data, and correcting concentration factors. EPA recalculated the assessment using the submitted acute file and the correct acute RfD, updated %CT data, correcting the residue files above to use one-half limit of detection (LOD) and one-half limit of quantitation (LOQ) where appropriate, and using the average field trial residue level and previously established processing factors for blended commodities. In addition, EPA's analysis included residues in pear juice for which no data has been previously required. Since all other juices show reductions in avermectin residues from the raw agricultural commodity, EPA used the reduction factor for apples in the analysis. The dietary (food only) acute %PAD range from 18% for nursing infants < 1 year old to 70% for children 1–6 yrs. This risk estimate should be viewed as highly refined since it used anticipated residue values and percent crop-treated data in conjunction with Monte Carlo analysis. The acute dietary exposure does not exceed EPA's level of concern. The registrant is reminded that future probabilistic modeling submissions should follow EPA's suggested guidelines (http://www.epa.gov/fedrgstr/EPA-PEST/1998/November/Day-05/o-p29665.htm).

Avermectin is a moderately persistent, but non-mobile compound in soil and water environments. The GENEEC and SCI-GROW modeling data for avermectin in drinking water indicate levels less than OPP's DWLOC for acute exposure. Using the refined PRZM-EXAMS modeling data in drinking water also indicates levels less than OPP's DWLOC for acute exposure, with the exception of children 1–6 years old. EPA notes that the certainty of the concentrations estimated for strawberries in the refined estimates is low, due to uncertainty on the amount of runoff from plant beds covered in plastic mulch and uncertainty on the amount of degradation of avermectin on black plastic compared to soil. Although the peak EEC of 0.88 µg/L slightly exceeds the acute DWLOC (0.74 µg/L, considering the uncertain nature of the modeling estimate, EPA does not expect aggregate acute exposure to avermectin will pose an unacceptable risk to human health.

3. *Chronic risk*. Using the exposure assumptions described in this unit, EPA has concluded that aggregate exposure to avermectin from food will utilize 7% of the PAD for infants and children. The major identifiable subgroup with the highest aggregate exposure is non-nursing infants with 19% of the chronic PAD. No chronic residential exposures are expected from use of avermectin. Avermectin is a moderately persistent, but non-mobile compound in soil and water environments. EPA does not expect aggregate chronic exposure to avermectin will pose an unacceptable risk to human health.

4. Short- or intermediate-term risk. Short- and intermediate-term aggregate exposure takes into account chronic dietary food and water (considered to be a background exposure level) plus indoor and outdoor residential exposure.

i. Short-term aggregate exposure takes into account chronic dietary food and water (considered to be a background exposure level) plus short-term residential uses which include dermal, inhalation, and oral exposures. For children's postapplication exposure from crack and crevice uses, the worst case exposure scenario, risks do not exceed EPA's level of concern. The residential uses that were aggregated with chronic dietary food and water are from lawn and crack and crevice uses and include:

• ADULT dermal exposure from the highest adult residential applicator scenario (3.4E–7 mg/kg/day from belly grinder granular open pour) and crack and crevice applicator scenario (2.1E–8 mg/kg/day) with exposure from postapplication activities (3.0E–6 mg/kg/day), and inhalation from turf and crack and crevice (3.9E–7 mg/kg/day).

• CHILDREN's oral exposure from turf and crack and crevice hand-to-mouth, with turf incidental ingestion (3.8E–5 mg/kg/day), dermal exposure from turf and crack and crevice (6.1E–6 mg/kg/day), and inhalation exposure from crack and crevice (1.1E–4 mg/kg/day). Using the exposures above, EPA calculated the short-term drinking water level of concerns (DWLOCs). The DWLOC of 8.2 µg/L for the U.S. population is greater than the water EEC's. The DWLOC for infants/children (0.75 µg/L) is slightly exceeded by the PRZM-EXAMS peak value of 0.88 µg/L. However, as noted above for the acute DWLOC, EPA is not concerned given the uncertainty of the estimated water concentrations. EPA does not expect aggregate short-term exposure to avermectin will pose an unacceptable risk to human health.

ii. The worst case intermediate-term exposures to avermectin for adults are the same as those described above for short-term exposures. Using the exposures above, EPA calculated the adult intermediate-term DWLOC of 8.2 µg/L, which is greater than the water EEC's provided by EFED. EPA does not expect aggregate intermediate-term exposure to avermectin will pose an unacceptable risk to adult human health.

iii. The worst case intermediate-term exposures to avermectin for infants and children are the same as those described above. Since the short- and intermediate-term NOAELs are the same, the DWLOC is also equal to the 0.75 µg/L short-term value. Again, given the uncertainty in the 0.88 µg/L PRZM-EXAMS value, EPA is not concerned with the residues in drinking water at this time. EPA does not expect aggregate intermediate-term exposure to avermectin will pose an unacceptable risk to human health.

5. *Determination of safety*. Based on these risk assessments, EPA concludes that there is a reasonable certainty that no harm will result to infants and children from aggregate exposure to avermectin residues.

IV. Other Considerations

Analytical Enforcement Methodology

Adequate enforcement methodology (example - gas chromotography) is available to enforce the tolerance expression. The method may be requested from: Calvin Furlow, PRRIB, IRSD (7502C), Office of Pesticide Programs, Environmental Protection Agency, 401 M St., SW., Washington, DC 20460. Office location and telephone number: Rm 101FF, Crystal Mall #2, 1921 Jefferson Davis Hwy., Arlington, VA, (703) 305–5229.

V. Conclusion

Therefore, the tolerance is established for combined residues of avermectin in or on avocado at 0.02 ppm.

VI. Objections and Hearing Requests

The new FFDCA section 408(g) provides essentially the same process for persons to ''object'' to a tolerance regulation as was provided in the old section 408 and in section 409. However, the period for filing objections is 60 days, rather than 30 days. EPA currently has procedural regulations which govern the submission of objections and hearing requests. These regulations will require some modification to reflect the new law. However, until those modifications can be made, EPA will continue to use those procedural regulations with appropriate adjustments to reflect the new law.

Any person may, by June 7, 1999, file written objections to any aspect of this regulation and may also request a hearing on those objections. Objections and hearing requests must be filed with the Hearing Clerk, at the address given under the ''ADDRESSES'' section (40 CFR 178.20). A copy of the objections and/or hearing requests filed with the Hearing Clerk should be submitted to the OPP docket for this rulemaking. The objections submitted must specify the provisions of the regulation deemed objectionable and the grounds for the objections (40 CFR 178.25). Each objection must be accompanied by the fee prescribed by 40 CFR 180.33(i). EPA is authorized to waive any fee requirement ''when in the judgement of the Administrator such a waiver or refund is equitable and not contrary to the purpose of this subsection.'' For additional information regarding tolerance objection fee waivers, contact James Tompkins, Registration Division (7505C), Office of Pesticide Programs, Environmental Protection Agency, 401 M St., SW., Washington, DC 20460. Office location, telephone number, and e-mail address: Rm. 239, Crystal Mall #2, 1921 Jefferson Davis Hwy., Arlington, VA, (703) 305–5697, tompkins.jim@epa.gov. Requests for waiver of tolerance objection fees should be sent to James Hollins, Information Resources and Services Division (7502C), Office of Pesticide Programs, Environmental Protection Agency, 401 M St., SW., Washington, DC 20460.

If a hearing is requested, the objections must include a statement of the factual issues on which a hearing is requested, the requestor's contentions on such issues, and a summary of any evidence relied upon by the requestor (40 CFR 178.27). A request for a hearing will be granted if the Administrator determines that the material submitted shows the following: There is genuine and substantial issue of fact; there is a reasonable possibility that available evidence identified by the requestor would, if established, resolve one or more of such issues in favor of the requestor, taking into account uncontested claims or facts to the contrary; and resolution of the factual issues in the manner sought by the requestor would be adequate to justify the action requested (40 CFR 178.32). Information submitted in connection with an objection or hearing request may be claimed confidential by marking any part or all of that information as CBI. Information so marked will not be disclosed except in accordance with procedures set forth in 40 CFR part 2. A copy of the information that does not contain CBI must be submitted for inclusion in the public record. Information not marked confidential may be disclosed publicly by EPA without prior notice.

VII. Public Record and Electronic Submissions

EPA has established a record for this regulation under docket control number [OPP–300825] (including any comments and data submitted electronically). A public version of this record, including printed, paper versions of electronic comments, which does not include any information claimed as CBI, is available for inspection from 8:30 a.m. to 4 p.m., Monday through Friday, excluding legal holidays. The public record is located in Room 119 of the Public Information and Records Integrity Branch, Information Resources and Services Division

(7502C), Office of Pesticide Programs, Environmental Protection Agency, Crystal Mall #2, 1921 Jefferson Davis Hwy., Arlington, VA.

Objections and hearing requests may be sent by e-mail directly to EPA at: opp-docket@epa.gov.

E-mailed objections and hearing requests must be submitted as an ASCII file avoiding the use of special characters and any form of encryption.

The official record for this regulation, as well as the public version, as described in this unit will be kept in paper form. Accordingly, EPA will transfer any copies of objections and hearing requests received electronically into printed, paper form as they are received and will place the paper copies in the official record which will also include all comments submitted directly in writing. The official record is the paper record maintained at the Virginia address in ''ADDRESSES'' at the beginning of this document.

VIII. Regulatory Assessment Requirements

A. Certain Acts and Executive Orders

This final rule establishes a tolerance under section 408 of the FFDCA. The Office of Management and Budget (OMB) has exempted these types of actions from review under Executive Order 12866, entitled *Regulatory Planning and Review* (58 FR 51735, October 4, 1993). This final rule does not contain any information collections subject to OMB approval under the Paperwork Reduction Act (PRA), 44 U.S.C. 3501 *et seq.*, or impose any enforceable duty or contain any unfunded mandate as described under Title II of the Unfunded Mandates Reform Act of 1995 (UMRA) (Pub. L. 104–4). Nor does it require any prior consultation as specficed by Executive Order 12875, entitled *Enhancing the Intergovernmental Partnership* (58 FR 58093, October 28, 1993), or special considerations as required by Executive Order 12898, entitled *Federal Actions to Address Environmental Justice in Minority Populations and Low-Income Populations* (59 FR 7629, February 16, 1994), or require OMB review in accordance with Executive Order 13045, entitled *Protection of Children from Environmental Health Risks and Safety Risks* (62 FR 19885, April 23, 1997).

In addition, since tolerances and exemptions that are established on the basis of a petition under FFDCA section 408(l)(6), such as the tolerance in this final rule, do not require the issuance of a proposed rule, the requirements of the Regulatory Flexibility Act (RFA) (5 U.S.C. 601 *et seq.*) do not apply. Nevertheless, the Agency previously assessed whether establishing tolerances, exemptions from tolerances, raising tolerance levels or expanding exemptions might adversely impact small entities and concluded, as a generic matter, that there is no adverse economic impact. The factual basis for the Agency's generic certification for tolerance actions published on May 4, 1981 (46 FR 24950), and was provided to the Chief Counsel for Advocacy of the Small Business Administration.

B. Executive Order 12875

Under Executive Order 12875, entitled *Enhancing the Intergovernmental Partnership* (58 FR 58093, October 28, 1993), EPA may not issue a regulation that is not required by statute and that creates a mandate upon a State, local or tribal government, unless the Federal government provides the funds necessary to pay the direct compliance costs incurred by those governments. If the mandate is unfunded, EPA must provide to OMB a description of the extent of EPA's prior consultation with representatives of affected State, local, and tribal governments, the nature of their concerns, copies of any written communications from the governments, and a statement supporting the need to issue the regulation. In addition, Executive Order 12875 requires EPA to develop an effective process permitting elected officials and other representatives of State, local, and tribal governments ''to provide meaningful and timely input in the development of regulatory proposals containing significant unfunded mandates.''

Today's rule does not create an unfunded Federal mandate on State, local, or tribal governments. The rule does not impose any enforceable duties on these entities. Accordingly, the requirements of section 1(a) of Executive Order 12875 do not apply to this rule.

C. Executive Order 13084

Under Executive Order 13084, entitled *Consultation and Coordination with Indian Tribal Governments* (63 FR 27655, May 19, 1998), EPA may not issue a regulation that is not required by statute, that significantly or uniquely affects the communities of Indian tribal governments, and that imposes substantial direct compliance costs on those communities, unless the Federal government provides the funds necessary to pay the direct compliance costs incurred by the tribal governments. If the mandate is unfunded, EPA must provide OMB, in a separately identified section of the preamble to the rule, a description of the extent of EPA's prior consultation with representatives of affected tribal governments, a summary of the nature of their concerns, and a statement supporting the need to issue the regulation. In addition, Executive Order 13084 requires EPA to develop an effective process permitting elected officials and other representatives of Indian tribal governments ''to provide meaningful and timely input in the development of regulatory policies on matters that significantly or uniquely affect their communities.''

Today's rule does not significantly or uniquely affect the communities of Indian tribal governments. This action does not involve or impose any requirements that affect Indian tribes. Accordingly, the requirements of section 3(b) of Executive Order 13084 do not apply to this rule.

IX. Submission to Congress and the Comptroller General

The Congressional Review Act, 5 U.S.C. 801 *et seq.*, as added by the Small Business Regulatory Enforcement Fairness Act of 1996, generally provides that before a rule may take effect, the Agency promulgating the rule must submit a rule report, which includes a copy of the rule, to each House of the Congress and the Comptroller General of the United States. EPA will submit a report containing this rule and other required information to the U.S. Senate, the U.S. House of Representatives and the Comptroller General of the United States prior to publication of the rule in the **Federal Register**. This rule is not a ''major rule'' as defined by 5 U.S.C. 804(2).

List of Subjects in 40 CFR Part 180

Environmental protection, Administrative practice and procedure, Agricultural commodities, Pesticides and pests, Reporting and recordkeeping requirements.

Dated: March 24, 1999.

James Jones,

Director, Registration Division, Office of Pesticide Programs.

Therefore, 40 CFR chapter I is amended as follows:

PART 180—[AMENDED]

1. The authority citation for part 180 continues to read as follows:

Authority: 21 U.S.C. 321(q), 346a and 371.

2. In § 180.449, the table to paragraph (b) is amended by adding an entry for avocado to read as follows:

§ 180.449 Avermectin B_1 and its delta-8,9-isomer; tolerances for residues.

* * * * *

(b) * * *

Commodity	Parts per million	Expiration/revocation date
Avocado	0.02	9/20/00
* *	*	* *

* * * * *

[FR Doc. 99–8340 Filed 4–6–99; 8:45 am]

BILLING CODE 6560–50–F

ENVIRONMENTAL PROTECTION AGENCY

40 CFR Part 180

[OPP–300828; FRL–6072–6]

RIN 2070–AB78

Tebufenozide; Pesticide Tolerance

AGENCY: Environmental Protection Agency (EPA).

ACTION: Final rule.

SUMMARY: This regulation establishes tolerances for residues of Tebufenozide, benzoic acid, 3,5-dimethyl-, 1-(1,1-dimethylethyl)-2-(4-ethylbenzoyl) hydrazide in or on berry (crop group 13), cranberry, and mint. The Interregional Research Project Number 4 (IR–4) requested these tolerances under the Federal Food, Drug, and Cosmetic Act, as amended by the Food Quality Protection Act of 1996.

DATES: This regulation is effective April 7, 1999. Objections and requests for hearings must be received by EPA on or before June 7, 1999.

ADDRESSES: Written objections and hearing requests, identified by the docket control number, [OPP–300828], must be submitted to: Hearing Clerk (1900), Environmental Protection Agency, Rm. M3708, 401 M St., SW., Washington, DC 20460. Fees accompanying objections and hearing requests shall be labeled ''Tolerance Petition Fees'' and forwarded to: EPA Headquarters Accounting Operations Branch, OPP (Tolerance Fees), P.O. Box 360277M, Pittsburgh, PA 15251. A copy of any objections and hearing requests filed with the Hearing Clerk identified by the docket control number, [OPP–300828], must also be submitted to: Public Information and Records Integrity Branch, Information Resources and Services Division (7502C), Office of Pesticide Programs, Environmental Protection Agency, 401 M St., SW., Washington, DC 20460. In person, bring a copy of objections and hearing requests to Rm. 119, Crystal Mall #2, 1921 Jefferson Davis Hwy., Arlington, VA.

A copy of objections and hearing requests filed with the Hearing Clerk may be submitted electronically by sending electronic mail (e-mail) to: opp-docket@epa.gov. Copies of objections and hearing requests must be submitted as an ASCII file avoiding the use of special characters and any form of encryption. Copies of objections and hearing requests will also be accepted on disks in WordPerfect 5.1/6.1 file format or ASCII file format. All copies of objections and hearing requests in electronic form must be identified by the docket control number [OPP–300828]. No Confidential Business Information (CBI) should be submitted through e-mail. Electronic copies of objections and hearing requests on this rule may be filed online at many Federal Depository Libraries.

FOR FURTHER INFORMATION CONTACT: By mail: Sidney Jackson, Registration Division (7505C), Office of Pesticide Programs, Environmental Protection Agency, 401 M St., SW., Washington, DC 20460. Office location, telephone number, and e-mail address: Rm. 272, Crystal Mall #2, 1921 Jefferson Davis Hwy., Arlington, VA, (703) 305–7610, e-mail: jackson.sidney@epa.gov.

SUPPLEMENTARY INFORMATION: In the **Federal Register** of February 9, 1999 (64 FR 6351) (FRL–6058–3), EPA issued a notice pursuant to section 408 of the Federal Food, Drug, and Cosmetic Act (FFDCA), 21 U.S.C. 346a as amended by the Food Quality Protection Act of 1996 (FQPA) (Pub. L. 104–170) announcing the filing of pesticide petitions (PP) 8E5021, 8E4983, and 8E5019 for tolerance by IR–4 . This notice included a summary of the petition prepared by the Rohm and Haas Company, the registrant. There were no comments received in response to the notice of filing.

The petition requested that 40 CFR 180.482 be amended by establishing tolerances for residues of the insecticide tebufenozide, benzoic acid, 3,5-dimethyl-, 1-(1,1-dimethylethyl)-2-(4-ethylbenzoyl) hydrazide, in or on the berry crop group at 3.0 parts per million (ppm), cranberry at 1.0 ppm, and mint at 10.0 ppm.

I. Background and Statutory Findings

Section 408(b)(2)(A)(i) of the FFDCA allows EPA to establish a tolerance (the legal limit for a pesticide chemical residue in or on a food) only if EPA determines that the tolerance is ''safe.'' Section 408(b)(2)(A)(ii) defines ''safe'' to mean that ''there is a reasonable certainty that no harm will result from aggregate exposure to the pesticide chemical residue, including all anticipated dietary exposures and all other exposures for which there is reliable information.'' This includes exposure through drinking water and in residential settings, but does not include occupational exposure. Section 408(b)(2)(C) requires EPA to give special consideration to exposure of infants and children to the pesticide chemical residue in establishing a tolerance and to ''ensure that there is a reasonable certainty that no harm will result to infants and children from aggregate exposure to the pesticide chemical residue....''

EPA performs a number of analyses to determine the risks from aggregate exposure to pesticide residues. For further discussion of the regulatory requirements of section 408 and a complete description of the risk assessment process, see the final rule on Bifenthrin Pesticide Tolerances (62 FR 62961, November 26, 1997) (FRL–5754–7).

II. Aggregate Risk Assessment and Determination of Safety

Consistent with section 408(b)(2)(D), EPA has reviewed the available scientific data and other relevant information in support of this action. EPA has sufficient data to assess the hazards of tebufenozide and to make a determination on aggregate exposure, consistent with section 408(b)(2), for tolerances for residues of tebufenozide on the berry crop group at 3.0 ppm, cranberry at 1.0 ppm, and mint at 10.0 ppm. EPA's assessment of the dietary exposures and risks associated with establishing the tolerance follows.

A. Toxicological Profile

EPA has evaluated the available toxicity data and considered its validity, completeness, and reliability as well as the relationship of the results of the studies to human risk. EPA has also considered available information concerning the variability of the sensitivities of major identifiable subgroups of consumers, including infants and children. The nature of the toxic effects caused by tebufenozide are discussed in this unit.

1. *Acute toxicity*. Results of a battery of toxicological studies using technical grade product show tebufenozide has low acute toxicity. Tebufenozide was practically non-toxic by ingestion of a single oral dose in rats and mice (LD_{50} > 5,000 milligram/kilogram (mg/kg)) and was practically non-toxic by dermal application lethal dose(LD) LD_{50} > 5,000

mg/kg. Tebufenozide was not significantly toxic to rats after a 4–hr inhalation exposure with a lethal concentration(LC) LC_{50} value of 4.5 mg/L (highest attainable concentration), is not considered to be a primary eye irritant or a skin irritant and is not a dermal sensitizer. An acute neurotoxicity study in rats did not produce any neurotoxic or neuropathologic effects.

2. *Genotoxicty*. Tebufenozide technical was negative (non-mutagenic) in an Ames assay with and without hepatic enzyme activation and in a reverse mutation assay with *E. coli*. Tebufenozide technical was negative in a hypoxanthine guanine phophoribosyl transferase (HGPRT) gene mutation assay using Chinese hamster ovary (CHO) cells in culture when tested with and without hepatic enzyme activation. In isolated rat hepatocytes, tebufenozide technical did not induce unscheduled DNA synthesis (UDS) or repair when tested up to the maximum soluble concentration in culture medium. Tebufenozide did not produce chromosome effects *in vivo* using rat bone marrow cells or *in vitro* using Chinese hamster ovary cells (CHO). On the basis of the results from this battery of tests, it is concluded that tebufenozide is not mutagenic or genotoxic.

3. *Reproductive and developmental toxicity*— i. *Reproductive toxicity*. In a 1993 2–generation reproduction study in Sprague-Dawley rats, the parental (systemic) no observable adverse effect levels (NOAEL) was 0.8 and 0.9 mg/kg/day for males and females, respectively. The parental (systemic) lowest observable adverse effect level(LOAEL) was 11.5 and 12.8 mg/kg/day for males and females, respectively, based on decreased body weight, body weight gain, and food consumption in males. An increased incidence and/or severity of splenic pigmentation was also observed. The reproductive NOAEL was 11.5 and 12.8 mg/kg/day for males and females, respectively. The reproductive LOAEL was 154.8 and 171.1 mg/kg/day for males and females, respectively, based on an increase in the number of pregnant females with increased gestation duration and dystocia. Effects in the offspring consisted of decreased number of pups per litter on postnatal days 0 and/or 4.

In a 1995 2–generation reproduction study designed to evaluate parental (systemic) toxicity in rats, the NOAEL was 1.6 and 1.8 mg/kg/day in males and females, respectively. The LOAEL was 12.6 and 14.6 mg/kg/day in males and females, respectively, based on histopathological findings of congestion and extramedullary hematopoiesis in the spleen. The offspring NOAEL was 12.6 and 14.6 mg/kg/day in males and females, respectively. The offspring LOAEL was 126.0 and 143.2 mg/kg/day in males and females, respectively, based on decreased body weight on postnatal days 14 and 21.

ii. *Developmental toxicity*. In a prenatal developmental toxicity study in Sprague-Dawley rats, there was no evidence of maternal or developmental toxicity at the highest dose level of 1,000 mg/kg/day. The maternal and developmental toxicity NOAEL was 1,000 mg/kg/day .

In a prenatal developmental toxicity study conducted in New Zealand white rabbits, tebufenozide was administered in doses of 50, 250, or 1,000 mg/kg/day on gestation days 7–19. No evidence of maternal or developmental toxicity was observed. The maternal and developmental toxicity NOAEL was 1,000 mg/kg/day.

4. *Subchronic toxicity*. i. The NOAEL in a 90–day rat feeding study was 200 ppm (13 mg/kg/day for males, 16 mg/kg/day for females). The LOAEL was 2,000 ppm (133 mg/kg/day for males, 155 mg/kg/day for females). Decreased body weights in males and females was observed at the LOAEL of 2,000 ppm. As part of this study, the potential for tebufenozide to produce subchronic neurotoxicity was investigated. Tebufenozide did not produce neurotoxic or neuropathologic effects when administered in the diets of rats for 3 months at concentrations up to and including the limit dose of 20,000 ppm (NOAEL = 1,330 mg/kg/day for males, 1,650 mg/kg/day for females).

ii. In a 90–day feeding study with mice, the NOAEL was 20 ppm (3.4 and 4.0 mg/kg/day for males and females, respectively). The LOAEL was 200 ppm (35.3 and 44.7 mg/kg/day for males and females, respectively). Decreases in body weight gain were noted in male mice at the LOAEL of 200 ppm.

iii. A 90–day dog feeding study gave a NOAEL of 50 ppm (2.1 mg/kg/day for males and females). The LOAEL was 500 ppm (20.1 and 21.4 mg/kg/day for males and females, respectively). At the LOAEL, females exhibited a decrease in rate of weight gain and males presented an increased reticulocyte.

iv. A 10–week study was conducted in the dog to examine the reversibility of the effects on hematological parameters that were observed in other dietary studies with the dog. Tebufenozide was administered for 6 weeks in the diet to 4 male dogs at concentrations of either 0 or 1,500 ppm. After the sixth week, the dogs receiving treated feed were switched to the control diet for 4 weeks. Hematological parameters were measured in both groups prior to treatment, at the end of the 6–week treatment, after 2 weeks of recovery on the control diet and after 4 weeks of recovery on the control diet. All hematological parameters in the treated/recovery group were returned to control levels indicating that the effects of tebufenozide on the hemopoietic system are reversible in the dog.

v. In a 21–day dermal toxicity study of tebufenozide, rats (6/sex/dose) received repeated dermal administration of either the technical 96.1% product RH–75,992 at 1,000 mg/kg/day (Limit-Dose) or the formulation (23.1% a.i.) product RH–755,992 2F at 0, 62.5, 250, or 1,000 mg/kg/day, 6 hours/day, 5 days/week for 21 days. The high dose was administered as the ''neat'' compound, while the low and mid-dose were prepared as dilutions with distilled water. While the untreated group received no treatment, the solvent control group received a ''2F Formulation Blank'' at a solvent volume equal to that received by the formulation high-dose group.

Under conditions of this study, RH–75,992 Technical or RH–75,992 2F demonstrated no systemic toxicity or dermal irritation at the highest dose tested 1,000 mg/kg/ during the 21 day study.

Based on these results, the NOAEL for systemic toxicity and dermal irritation in both sexes is 1,000 mg/kg/day, the highest dose tested. A LOAEL for systemic toxicity and dermal irritation was not established.

5. *Chronic toxicity/Carcinogenicity*. i. A 1–year feeding study in dogs resulted in decreased red blood cells, hematocrit, and hemoglobin and increased Heinz bodies, reticulocytes, and platelets at the LOAEL of 8.7 mg/kg/day. The NOAEL for systemic toxicity was 1.8 mg/kg/day.

ii. An 18–month mouse carcinogenicity study showed no signs of carcinogenicity at dosage levels up to and including 1,000 ppm, the highest dose tested.

iii. In a combined rat chronic/carcinogenicity study, the NOAEL for chronic toxicity was 100 ppm (4.8 and 6.1 mg/kg/day for males and females, respectively) and the LOAEL was 1,000 ppm (48 and 61 mg/kg/day for males and females, respectively). No carcinogenicity was observed at the dosage levels up to 2,000 ppm (97 mg/kg/day and 125 mg/kg/day for males and females, respectively).

B. Toxicological Endpoints

1. *Acute toxicity*. Toxicity observed in oral toxicity studies were not

attributable to a single dose (exposure). No neurological or systemic toxicity was observed in rats given a single oral administration of tebufenozide at 0, 500, 1,000 or 2,000 mg/kg. No maternal or developmental toxicity was observed following oral administration of tebufenozide at 1,000 mg/kg/day (Limit-Dose) during gestation to pregnant rats or rabbits. The Agency concludes that this risk is negligible. Therefore, no toxicological endpoint is required for acute toxicity.

2. *Short- and intermediate-term toxicity.* Since there are no registered residential uses, there were no dermal and inhalation endpoints established for tebufenozide. No dermal or systemic toxicity was seen in rats receiving 15 repeated dermal applications of the technical (97.2%) product at 1,000 mg/kg/day (Limit-Dose) as well as a formulated (23% a.i.) product at 0, 62.5, 250, or 1,000 mg/kg/day over a 21–day period. The Agency noted that in spite of the hematological effects seen in the dogs study, similar effects were not seen in rats receiving the compound via the dermal route indicating poor dermal absorption. Also, no developmental endpoints of concern were evident due to the lack of developmental toxicity in either rat or rabbit studies. The Agency concludes that this risk is negligible and no toxicological endpoint is required for short- and intermediate-term toxicity.

3. *Chronic toxicity.* EPA has established the Reference dose (RfD) for tebufenozide at 0.018. This RfD is based on a chronic toxicity study in dogs which found growth retardation, alterations in hematology parameters, changes in organ weights, and histopathological lesions in the bone, spleen and liver at 8.7 mg/kg/day.

4. *Carcinogenicity.* Tebufenozide has been classified as a Group E, ''no evidence of carcinogenicity for humans,'' chemical by the Agency's RfD Committee.

5. *Animal metabolism.* The absorption, distribution, excretion and metabolism of tebufenozide in rats was investigated. Tebufenozide is partially absorbed, is rapidly excreted and does not accumulate in tissues. Although tebufenozide is mainly excreted unchanged, a number of polar metabolites were identified. These metabolites are products of oxidation of the benzylic ethyl or methyl side chains of the molecule. These metabolites were detected in plant and other animal (rat, goat, hen) metabolism studies.

6. *Metabolite toxicology.* Common metabolic pathways for tebufenozide have been identified in both plants (grape, apple, rice and sugar beet) and animals (rat, goat, hen). The metabolic pathway common to both plants and animals involves oxidation of the alkyl substituents (ethyl and methyl groups) of the aromatic rings primarily at the benzylic positions. Extensive degradation and elimination of polar metabolites occurs in animals such that residues are unlikely to accumulate in humans or animals exposed to these residues through the diet.

7. *Endocrine disruption.* The toxicology profile of tebufenozide shows no evidence of physiological effects characteristic of the disruption of the hormone estrogen. Based on structure-activity information, tebufenozide is unlikely to exhibit estrogenic activity. Tebufenozide was not active in a direct *in vitro* estrogen binding assay. No indicators of estrogenic or other endocrine effects were observed in mammalian chronic studies or in mammalian and avian reproduction studies. Ecdysone has no known effects in vertebrates. Overall, the weight of evidence provides no indication that tebufenozide has endocrine activity in vertebrates.

C. Exposures and Risks

1. *From food and feed uses.* Tolerances have been established (40 CFR 180.482) for the residues of tebufenozide, in or on a variety of raw agricultural commodities. Currently established tolerances for residues of tebufenozide are listed under 40 CFR 180.482 and include permanent tolerances for residues in/on pecans (0.01 ppm) and walnuts (0.1 ppm), import tolerances for residues in/on apples (1.0 ppm) and wine grapes (0.5 ppm), and time-limited tolerances on various plant and animal commodities.

The metabolic fate of tebufenozide in animals is currently under review by the Agency, therefore, in this risk assessment, only existing and proposed uses of tebufenozide on raw agricultural commodities are considered as no livestock feed items are derived from berry (crop group 13), cranberry and mint. Risk assessments were conducted by EPA to assess dietary exposures from tebufenozide as follows:

Section 408(b)(2)(F) states that the Agency may use data on the actual percent of food treated (PCT) for assessing chronic dietary risk only if the Agency can make the following findings: That the data used are reliable and provide a valid basis to show what percentage of the food derived from such crop is likely to contain such pesticide residue; that the exposure estimate does not underestimate exposure for any significant subpopulation group; and if data are available on pesticide use and food consumption in a particular area, the exposure estimate does not understate exposure for the population in such area. In addition, the Agency must provide for periodic evaluation of any estimates used. To provide for the periodic evaluation of the estimate of percent of crop treated as required by the section 408(b)(2)(F), EPA may require registrants to submit data on PCT.

The Agency used PCT information as follows:

To refine chronic dietary exposure and risk estimates obtained by the use of the Dietary Exposure Evaluation Model (DEEM), which incorporates data from the Continuing Survey of Food Intakes by Individuals (CSFII) for a specified period.

The Agency believes that the three conditions, discussed in section 408 (b)(2)(F) in this unit concerning the Agency's responsibilities in assessing chronic dietary risk findings, have been met. The PCT estimates are derived from Federal and private market survey data, which are reliable and have a valid basis. Typically, a range of estimates are supplied and the upper end of this range is assumed for the exposure assessment. By using this upper end estimate of the PCT, the Agency is reasonably certain that the percentage of the food treated is not likely to be underestimated. The regional consumption information and consumption information for significant subpopulations is taken into account through EPA's computer-based model for evaluating the exposure of significant subpopulations including several regional groups. Use of this consumption information in EPA's risk assessment process ensures that EPA's exposure estimate does not understate exposure for any significant subpopulation group and allows the Agency to be reasonably certain that no regional population is exposed to residue levels higher than those estimated by the Agency. Other than the data available through national food consumption surveys, EPA does not have available information on the regional consumption of food to which tebufenozide may be applied in a particular area.

i. *Acute exposure and risk.* No endpoints were selected for acute dietary exposure. Acute dietary risk assessments are performed for a food-use pesticide if a toxicological study has indicated the possibility of an effect of concern occurring as a result of a 1–day or single exposure. Toxicity observed in oral toxicity studies were not attributable to a single dose (exposure). No neurological or systemic toxicity was

observed in rats given a single oral administration of tebufenozide at 0, 500, 1,000 or 2,000 mg/kg. No maternal or developmental toxicity was observed following oral administration of tebufenozide at 1,000 mg/kg/day (Limit-Dose) during gestation to pregnant rats or rabbits. This risk assessment is not required. The Agency considers acute exposure/risk to be negligible.

ii. *Chronic exposure and risk.* The residue of concern for tebufenozide in plant and animal commodities is the parent compound per se. The RFD used for the chronic dietary analysis is 0.018 mg/kg/day. In performing chronic dietary exposure and risk analysis, the Agency used the Dietary Exposure Evaluation Model (DEEM), which incorporates data from the CSFII for the period, 1989 to 1992. Some refinement to the dietary exposure estimates was made through the use of percent-of-crop-treated data. The resulting Anticipated Residue Contributions (ARC) for the U.S. population and various DEEM population subgroups can be determined. Of these subgroups, the highest exposure is projected for children ages 1–6 years, whose chronic intake is estimated as 73% of the RfD. Percent RFD values for other subgroups include: U.S. population for the 48 states (36), all infants less than 1 year old (52) and children 7 to 12 years old (46). Generally, in the absence of additional safety factors, the Agency is not concerned with exposures less than 100% of the RfD. Thus, for all populations, the chronic human health risk from exposure to tebufenozide in foods is below the Agency's level of concern.

2. *From drinking water.* Available data suggest that tebufenozide ranges from moderately persistent to persistent and is mobile; thus, tebufenozide could potentially leach to ground water and runoff to surface water under certain environmental conditions. There is no Maximum contaminant Level (MCL) for residues of tebufenozide in drinking water. No drinking water Health Advisories have been issued for tebufenozide. There is no entry for tebufenozide in the ''Pesticides in Groundwater Database (EPA 734–12–92–001, September 1992). The Agency concludes that there is reasonable certainty that no harmful exposure exist from drinking water.

Chronic exposure and risk. Monitoring data are not available to assess the human exposure to tebufenozide via drinking water. In lieu of these data, the Agency has calculated the Tier I estimated concentrations in drinking water (DWECs) for tebufenozide using Generic expected environmental concentration (GENEEC) (surface water) and Screening concentration In Ground Water (SCI-GROW) (ground water) for use in the human health risk assessment. According to Agency records, the maximum application rate for tebufenozide is 0.25 lb a.i. x 5 applications per year on pecans. This application scenario was used to calculate the DWECs for the human health risk assessment due to the wide range of aerobic soil half-life of 6 (California Loam) and 729 (worst case soil with low microbial activity) days. For surface water, the chronic (56–day) values are 13.3 parts per billion (ppb) and 16.5 ppb for the half-lives of 66 and 729 days, respectively. The ground water screening concentrations are 0.16 ppb and 1.04 ppb for the half-lives of 66 and 729 days, respectively. These values represent upper-bound estimates of the concentrations that might be found in surface and ground water due to the use of tebufenozide on pecans.

In performing this risk assessment, the Agency has calculated drinking water levels of concern (DWLOCs) for each of the DEEM population subgroups. Within each subgroup, the population with the highest estimated exposure was used to determine the maximum concentration of tebufenozide that can occur in drinking water without causing an unacceptable human health risk. As a comparison value, the Agency has used the 16.5 ppb value in this risk assessment, as this represents a worst-case scenario. The DWLOCs for tebufenozide are above the DWEC of 16.5 ppb for all population subgroups. Therefore, the Agency believes that the human health risk from exposure to tebufenozide through drinking water is not likely to exceed the Agency's level of concern.

Because the Agency lacks sufficient water-related exposure data to complete a comprehensive drinking water risk assessment for many pesticides, EPA has commenced and nearly completed a process to identify a reasonable yet conservative bounding figure for the potential contribution of water-related exposure to the aggregate risk posed by a pesticide. In developing the bounding figure, EPA estimated residue levels in water for a number of specific pesticides using various data sources. The Agency then applied the estimated residue levels, in conjunction with appropriate toxicological endpoints (RfD's or acute dietary no observed adverse effect levels (NOAEL's)) and assumptions about body weight and consumption, to calculate, for each pesticide, the increment of aggregate risk contributed by consumption of contaminated water. While EPA has not yet pinpointed the appropriate bounding figure for exposure from contaminated water, the ranges the Agency is continuing to examine are all below the level that would cause tebufenozide to exceed the RfD if the tolerance being considered in this document were granted. The Agency has therefore concluded that the potential exposures associated with tebufenozide in water, even at the higher levels the Agency is considering as a conservative upper bound, would not prevent the Agency from determining that there is a reasonable certainty of no harm if the tolerance is granted.

3. *From non-dietary exposure.* Tebufenozide is not currently registered for use on residential non-food sites. The Agency concludes that there are no chronic, short- or intermediate-term non-dietary exposure.

4. *Cumulative exposure to substances with common mechanism of toxicity.* Section 408(b)(2)(D)(v) requires that, when considering whether to establish, modify, or revoke a tolerance, the Agency consider ''available information'' concerning the cumulative effects of a particular pesticide's residues and ''other substances that have a common mechanism of toxicity.''

EPA does not have, at this time, available data to determine whether tebufenozide has a common mechanism of toxicity with other substances or how to include this pesticide in a cumulative risk assessment. Unlike other pesticides for which EPA has followed a cumulative risk approach based on a common mechanism of toxicity, tebufenozide does not appear to produce a toxic metabolite produced by other substances. For the purposes of this tolerance action, therefore, EPA has not assumed that tebufenozide has a common mechanism of toxicity with other substances. For information regarding EPA's efforts to determine which chemicals have a common mechanism of toxicity and to evaluate the cumulative effects of such chemicals, see the final rule for Bifenthrin Pesticide Tolerances (62 FR 62961, November 26, 1997).

D. Aggregate Risks and Determination of Safety for U.S. Population

1. *Acute risk.* Since no acute toxicity endpoints were identified for tebufenozide, the Agency concludes that acute aggregate risk from the use of the pesticide will not pose an unacceptable risk to human health.

2. *Chronic risk.* In aggregating risks, the Agency has considered only dietary exposure. Due to lack of endpoints and/or relevant use registrations, assessment

of exposure via non-dietary routes (e.g., dermal, inhalation, non-dietary oral) are not required. Using the Anticipated Residue Contribution exposure assumptions described in this unit, EPA has concluded that aggregate exposure to tebufenozide from food will utilize 36% of the RFD for the U.S. population. The major identifiable subgroup with the highest aggregate exposure is children (1-6 years old) at 73% of the RFD and is discussed below. EPA generally has no concern for exposures below 100% of the RFD because the RFD represents the level at or below which daily aggregate dietary exposure over a lifetime will not pose appreciable risks to human health.

Since the dietary risk for tebufenozide is below the Agency's level of concern and the estimated concentrations of tebufenozide in drinking water are below EPA's drinking water level of concern, the Agency believes that establishment of the requested tolerances for tebufenozide will not pose an unacceptable aggregate health risk to infants, children, or adults.

3. *Short- and intermediate-term risk*. In aggregating risks, the Agency has considered only dietary exposure. Due to lack of endpoints and/or residential use registrations, the agency concludes that short- and intermediate-term risk via non-dietary routes (e.g., dermal, inhalation, non-dietary oral) will not pose an unacceptable risk to human health.

4. *Aggregate cancer risk for U.S. population*. Tebufenozide is classified as a Group E chemical (no evidence of carcinogenicity in humans). The Agency concludes that the aggregate cancer risk for the U. S. population is not impacted by the establishment of these proposed tolerances.

5. *Determination of safety*. EPA concludes that there is a reasonable certainty that no harm will result from aggregate exposure to tebufenozide residues.

E. Aggregate Risks and Determination of Safety for Infants and Children

1. *Safety factor for infants and children*— i. *In general*. In assessing the potential for additional sensitivity of infants and children to residues of tebufenozide EPA considered data from developmental toxicity studies in the rat and rabbit and a 2-generation reproduction study in the rat. The developmental toxicity studies are designed to evaluate adverse effects on the developing organism resulting from maternal pesticide exposure gestation. Reproduction studies provide information relating to effects from exposure to the pesticide on the reproductive capability of mating animals and data on systemic toxicity.

FFDCA section 408 provides that EPA shall apply an additional tenfold margin of safety for infants and children in the case of threshold effects to account for pre-and post-natal toxicity and the completeness of the database unless EPA determines that a different margin of safety will be safe for infants and children. Margins of safety are incorporated into EPA risk assessments either directly through use of a margin of exposure (MOE) analysis or through using uncertainty (safety) factors in calculating a dose level that poses no appreciable risk to humans. EPA believes that reliable data support using the standard uncertainty factor (usually 100 for combined inter- and intra-species variability) and not the additional tenfold MOE/uncertainty factor when EPA has a complete data base under existing guidelines and when the severity of the effect in infants or children or the potency or unusual toxic properties of a compound do not raise concerns regarding the adequacy of the standard MOE/safety factor.

ii. *Developmental toxicity studies*. Developmental toxicity studies showed no increased sensitivity in fetuses as compared to maternal animals following *in utero* exposures in rats and rabbits. See discussion under Unit II.A. of this preamble.

iii. *Reproductive toxicity study*. Multi-generation reproduction toxicity studies in rats showed no increased sensitivity in pups as compared to adults and offsprings. See discussion under Unit II.A. of this premble.

iv. *Pre- and post-natal sensitivity*. The Agency determined that available data provide no indication of increased sensitivity of rats or rabbits to *in utero* and/or postnatal exposure to tebufenozide.

v. *Conclusion*. The Agency believes that reliable data support using the standard hundredfold safety factor for assessing sensitivity to residues of tebufenozide and that an additional tenfold margin of safety for infants and children is not warranted. There is a complete toxicity database for tebufenozide and exposure data are complete or estimated based on data that reasonably account for potential exposures.

2. *Acute risk*. No acute toxicity endpoints for tebufenozide have been identified and this risk assessment is not required.

3. *Chronic risk*. Using the exposure assumptions described in this unit, EPA has concluded that aggregate exposure to tebufenozide from food only will utilize 52% and 73% of the RfD for all infants (<1 yr old) and children (1–6 yr old), respectively. EPA generally has no concern for exposures below 100% of the RfD because the RfD represents the level at or below which daily aggregate dietary exposure over a lifetime will not pose appreciable risks to human health. EPA does not expect the aggregate exposure from tebufenozide in food, drinking water and from non-dietary exposure to exceed the Agency level of concern.

4. *Short- or intermediate-term risk*. Since no short- or intermediate-term toxicological endpoints were identified by the Agency for tebufenozide and there are no registered uses that would result in residential exposure, the Agency concludes that this risk criterion is negligible and the subject tolerances adequately protect the safety of infants and children.

5. *Determination of safety*. Based on these risk assessments, EPA concludes that there is a reasonable certainty that no harm will result to infants and children from aggregate exposure to tebufenozide residues.

III. Other Considerations

A. Metabolism In Plants and Animals

The metabolism of tebufenozide in plants (grapes, apples, rice and sugar beets) is adequately understood for the purpose of these tolerances. The metabolism of tebufenozide in all crops was similar and involves oxidation of the alkyl substituents of the aromatic rings primarily at the benzylic positions. The extent of metabolism and degree of oxidation are a function of time from application to harvest. In all crops, parent compound comprised the majority of the total dosage. None of the metabolites were in excess of 10% of the total dosage.

Since there are no animal feed items associated with the berry crop group, cranberry and mint tops (leaves and stems), a discussion of the qualitative nature of the residue in animals is not germane to this action.

B. Analytical Enforcement Methodology

High performance liquid chromatographic (HPLC) analytical methods using ultraviolet (UV) detection have been validated for blueberries, raspberries, cranberries, and mint foliage. The methods involve extraction by blending with solvents, purification of the extracts by liquid-liquid partitions and final purification of the residues using solid phase extraction column chromatography. The limits of quantitation is 0.005 ppm for blueberries, 0.01 ppm for mint foliage,

and raspberries, 0.02 ppm for mint oil, and 0.05 ppm for cranberries.

C. Magnitude of Residues

Field residue trials were conducted with a 70WP formulation in geographically representative regions of the United States. A total of eight field residue trials were conducted in blueberries. The average blueberry residue value from all trials was 0.81 ppm.

A total of six field residue trials were conducted in cranberries. The average cranberry residue value from all trials was 0.30 ppm.

A total of five field residue trials were conducted in mint. The average mint foliage residue value from all trials was 7.11 ppm. Mint oil was prepared from foliage from two residue trials. The average oil residue was 0.23 ppm. Since residues do not concentrate in oil, a tolerance is not needed.

A total of five field residue trials were conducted in raspberries. The average raspberry residue value from all trials was 0.62 ppm.

D. International Residue Limits

There are currently no CODEX, Canadian or Mexican maximum residue levels (MRLs) established for tebufenozide in blueberries, cranberries or mint, therefore no harmonization issues are required for this action.

IV. Conclusion

Therefore, the tolerance is established for residues of tebufenozide in the berry crop group at 3.0 ppm, cranberry at 1.0 ppm, and mint at 10.0 ppm.

V. Objections and Hearing Requests

The new FFDCA section 408(g) provides essentially the same process for persons to ''object'' to a tolerance regulation as was provided in the old section 408 and in section 409. However, the period for filing objections is 60 days, rather than 30 days. EPA currently has procedural regulations which govern the submission of objections and hearing requests. These regulations will require some modification to reflect the new law. However, until those modifications can be made, EPA will continue to use those procedural regulations with appropriate adjustments to reflect the new law.

Any person may, by June 7, 1999, file written objections to any aspect of this regulation and may also request a hearing on those objections. Objections and hearing requests must be filed with the Hearing Clerk, at the address given under the ''ADDRESSES'' section (40 CFR 178.20). A copy of the objections and/or hearing requests filed with the Hearing Clerk should be submitted to the OPP docket for this regulation. The objections submitted must specify the provisions of the regulation deemed objectionable and the grounds for the objections (40 CFR 178.25). Each objection must be accompanied by the fee prescribed by 40 CFR 180.33(i). EPA is authorized to waive any fee requirement ''when in the judgement of the Administrator such a waiver or refund is equitable and not contrary to the purpose of this subsection.'' For additional information regarding tolerance objection fee waivers, contact James Tompkins, Registration Division (7505C), Office of Pesticide Programs, Environmental Protection Agency, 401 M St., SW., Washington, DC 20460. Office location, telephone number, and e-mail address: Rm. 239, Crystal Mall #2, 1921 Jefferson Davis Hwy., Arlington, VA, (703) 305–5697, tompkins.jim@epa.gov. Requests for waiver of tolerance objection fees should be sent to James Hollins, Information Resources and Services Division (7502C), Office of Pesticide Programs, Environmental Protection Agency, 401 M St., SW., Washington, DC 20460.

If a hearing is requested, the objections must include a statement of the factual issues on which a hearing is requested, the requestor's contentions on such issues, and a summary of any evidence relied upon by the requestor (40 CFR 178.27). A request for a hearing will be granted if the Administrator determines that the material submitted shows the following: There is genuine and substantial issue of fact; there is a reasonable possibility that available evidence identified by the requestor would, if established, resolve one or more of such issues in favor of the requestor, taking into account uncontested claims or facts to the contrary; and resolution of the factual issues in the manner sought by the requestor would be adequate to justify the action requested (40 CFR 178.32). Information submitted in connection with an objection or hearing request may be claimed confidential by marking any part or all of that information as CBI. Information so marked will not be disclosed except in accordance with procedures set forth in 40 CFR part 2. A copy of the information that does not contain CBI must be submitted for inclusion in the public record. Information not marked confidential may be disclosed publicly by EPA without prior notice.

VI. Public Record and Electronic Submissions

EPA has established a record for this regulation under docket control number [OPP–300828] (including any comments and data submitted electronically). A public version of this record, including printed, paper versions of electronic comments, which does not include any information claimed as CBI, is available for inspection from 8:30 a.m. to 4 p.m., Monday through Friday, excluding legal holidays. The public record is located in Room 119 of the Public Information and Records Integrity Branch, Information Resources and Services Division (7502C), Office of Pesticide Programs, Environmental Protection Agency, Crystal Mall #2, 1921 Jefferson Davis Hwy., Arlington, VA.

Objections and hearing requests may be sent by e-mail directly to EPA at: opp-docket@epa.gov.

E-mailed objections and hearing requests must be submitted as an ASCII file avoiding the use of special characters and any form of encryption. The official record for this regulation, as well as the public version, as described in this unit will be kept in paper form. Accordingly, EPA will transfer any copies of objections and hearing requests received electronically into printed, paper form as they are received and will place the paper copies in the official record which will also include all comments submitted directly in writing. The official record is the paper record maintained at the Virginia address in ''ADDRESSES'' at the beginning of this document.

VII. Regulatory Assessment Requirements

A. Certain Acts and Executive Orders

This final rule establishes a tolerance under section 408(d) of the FFDCA in response to a petition submitted to the Agency. The Office of Management and Budget (OMB) has exempted these types of actions from review under Executive Order 12866, entitled *Regulatory Planning and Review* (58 FR 51735, October 4, 1993). This final rule does not contain any information collections subject to OMB approval under the Paperwork Reduction Act (PRA), 44 U.S.C. 3501 *et seq.*, or impose any enforceable duty or contain any unfunded mandate as described under Title II of the Unfunded Mandates Reform Act of 1995 (UMRA) (Pub. L. 104–4). Nor does it require any prior consultation as specified by Executive Order 12875, entitled *Enhancing the Intergovernmental Partnership* (58 FR 58093, October 28, 1993), or special considerations as required by Executive

Order 12898, entitled *Federal Actions to Address Environmental Justice in Minority Populations and Low-Income Populations* (59 FR 7629, February 16, 1994), or require OMB review in accordance with Executive Order 13045, entitled *Protection of Children from Environmental Health Risks and Safety Risks* (62 FR 19885, April 23, 1997).

In addition, since tolerances and exemptions that are established on the basis of a petition under FFDCA section 408(d), such as the tolerance in this final rule, do not require the issuance of a proposed rule, the requirements of the Regulatory Flexibility Act (RFA) (5 U.S.C. 601 *et seq.*) do not apply. Nevertheless, the Agency previously assessed whether establishing tolerances, exemptions from tolerances, raising tolerance levels or expanding exemptions might adversely impact small entities and concluded, as a generic matter, that there is no adverse economic impact. The factual basis for the Agency's generic certification for tolerance actions published on May 4, 1981 (46 FR 24950), and was provided to the Chief Counsel for Advocacy of the Small Business Administration.

B. Executive Order 12875

Under Executive Order 12875, entitled *Enhancing the Intergovernmental Partnership* (58 FR 58093, October 28, 1993), EPA may not issue a regulation that is not required by statute and that creates a mandate upon a State, local or tribal government, unless the Federal government provides the funds necessary to pay the direct compliance costs incurred by those governments. If the mandate is unfunded, EPA must provide to OMB a description of the extent of EPA's prior consultation with representatives of affected State, local, and tribal governments, the nature of their concerns, copies of any written communications from the governments, and a statement supporting the need to issue the regulation. In addition, Executive Order 12875 requires EPA to develop an effective process permitting elected officials and other representatives of State, local, and tribal governments ''to provide meaningful and timely input in the development of regulatory proposals containing significant unfunded mandates.''

Today's rule does not create an unfunded Federal mandate on State, local, or tribal governments. The rule does not impose any enforceable duties on these entities. Accordingly, the requirements of section 1(a) of Executive Order 12875 do not apply to this rule.

C. Executive Order 13084

Under Executive Order 13084, entitled *Consultation and Coordination with Indian Tribal Governments* (63 FR 27655, May 19, 1998), EPA may not issue a regulation that is not required by statute, that significantly or uniquely affects the communities of Indian tribal governments, and that imposes substantial direct compliance costs on those communities, unless the Federal government provides the funds necessary to pay the direct compliance costs incurred by the tribal governments. If the mandate is unfunded, EPA must provide OMB, in a separately identified section of the preamble to the rule, a description of the extent of EPA's prior consultation with representatives of affected tribal governments, a summary of the nature of their concerns, and a statement supporting the need to issue the regulation. In addition, Executive Order 13084 requires EPA to develop an effective process permitting elected officials and other representatives of Indian tribal governments ''to provide meaningful and timely input in the development of regulatory policies on matters that significantly or uniquely affect their communities.''

Today's rule does not significantly or uniquely affect the communities of Indian tribal governments. This action does not involve or impose any requirements that affect Indian tribes. Accordingly, the requirements of section 3(b) of Executive Order 13084 do not apply to this rule.

VIII. Submission to Congress and the Comptroller General

The Congressional Review Act, 5 U.S.C. 801 et seq., as added by the Small Business Regulatory Enforcement Fairness Act of 1996, generally provides that before a rule may take effect, the Agency promulgating the rule must submit a rule report, which includes a copy of the rule, to each House of the Congress and the Comptroller General of the United States. EPA will submit a report containing this rule and other required information to the U.S. Senate, the U.S. House of Representatives and the Comptroller General of the United States prior to publication of the rule in the **Federal Register**. This rule is not a ''major rule'' as defined by 5 U.S.C. 804(2).

List of Subjects in 40 CFR Part 180

Environmental protection, Administrative practice and procedure, Agricultural commodities, Pesticides and pests, Reporting and recordkeeping requirements.

Dated: March 24, 1999.

James Jones,

Director, Registration Division, Office of Pesticide Programs.

Therefore, 40 CFR chapter I is amended as follows:

PART 180—[AMENDED]

1. The authority citation for part 180 continues to read as follows:

Authority: 21 U.S.C. 346a and 371.

2. In § 180.482, by revising the introductory text to paragraph (a) and by adding alphabetically the following entries to the table in paragraph (a).

§ 180.482 Tebufenozide; tolerances for residues.

(a) *General.* Tolerances are established for residues of the insecticide tebufenozide, benzoic acid, 3,5-dimethyl-1-(1,1-dimethylethyl)-2-(4-ethylbenzoyl)hydrazide, in or on the following raw agricultural commodities:

Commodity	Parts per million
* * * *	*
Berry (crop group 13)	3.0
Cranberry	1.0
* * * *	*
Peppermint, tops	10.0
Spearmint, tops	10.0

* * * * *

[FR Doc. 99–8341 Filed 4–6–99; 8:45 am]

BILLING CODE 6560–50–F

ENVIRONMENTAL PROTECTION AGENCY

40 CFR Part 180

[OPP–300823; FRL–6070–3]

RIN 2070–AB78

Trichoderma harzianum KRL-AG2 (ATCC #20847) or Strain T–22; Revision of Exemption from the Requirement of a Tolerance

AGENCY: Environmental Protection Agency (EPA).

ACTION: Final rule.

SUMMARY: This regulation establishes an exemption from the requirement of a tolerance for residues of the microbial pesticide active ingredient *Trichoderma harzianum* KRL-AG2 (ATCC #20847) also known as strain T–22 when applied/used as seed treatments, on cuttings and transplants, or as soil

treatments and certain foliar applications. Bioworks Inc., 122 North Genesee Street, Geneva, New York 14456 submitted a petition to EPA under the Federal Food, Drug, and Cosmetic Act, as amended by the Food Quality Protection Act of 1996 requesting an exemption from the requirement of a tolerance. This rule allows a revision of the existing exemption from tolerances for seed treatments (40 CFR 180. 1102) for residues of *Trichoderma harzianum* KRL-AG2 (ATCC #20847, also known as strain T–22) to include additional food commodities. This regulation eliminates the need to establish a maximum permissible level for residues of *Trichoderma harzianum* KRL-AG2.

DATES: This regulation is effective April 7, 1999. Objections and requests for hearings must be received by EPA on or before June 7, 1999.

ADDRESSES: Written objections and hearing requests, identified by the docket control number [OPP–300823], must be submitted to: Hearing Clerk (1900), Environmental Protection Agency, Rm. M3708, 401 M St., SW., Washington, DC 20460. Fees accompanying objections and hearing requests shall be labeled ''Tolerance Petition Fees'' and forwarded to: EPA Headquarters Accounting Operations Branch, OPP (Tolerance Fees) and forwarded to: EPA Headquarters Accounting Operations Branch, OPP (Tolerance Fees), P.O. Box 360277M, Pittsburgh, PA 15251. A copy of any objections and hearing requests filed with the Hearing Clerk identified by the docket control number, [OPP–300823], must also be submitted to: Public Information and Records Integrity Branch, Information Resources and Services Division (7502C), Office of Pesticide Programs, Environmental Protection Agency, 401 M St., SW., Washington, DC 20460. In person, bring a copy of objections and hearing requests to Rm. 119, Crystal Mall #2, 1921 Jefferson Davis Hwy., Arlington, VA.

A copy of objections and hearing requests filed with the Hearing Clerk may be submitted electronically by sending electronic mail (e-mail) to: opp-docket@epa.gov. Copies of electronic objections and hearing requests must be submitted as an ASCII file avoiding the use of special characters and any form of encryption. Copies of electronic objections and hearing requests will also be accepted on disks in WordPerfect 5.1/6.1 file format or ASCII file format. All copies of electronic objections and hearing requests must be identified by the docket number [OPP–300823]. No Confidential Business Information (CBI) should be submitted through e-mail. Copies of electronic objections and hearing requests on this rule may be filed online at many Federal Depository Libraries.

FOR FURTHER INFORMATION CONTACT: By mail: Shanaz Bacchus, c/o Product Manager (PM) 90, Biopesticides and Pollution Prevention Division (7511C), Environmental Protection Agency, 401 M St., SW., Washington, DC 20460. Office location, telephone number, and e-mail address: 9th fl., Crystal Mall #2 1921 Jefferson Davis Hwy., Arlington, VA, 703–308–8097, bacchus.shanaz@epamail.epa.gov.

SUPPLEMENTARY INFORMATION: In the **Federal Register** of August 22, 1997 (62 FR 34390) (FRL–5737–2), EPA issued a notice pursuant to section 408 of the Federal Food, Drug, and Cosmetic Act (FFDCA), 21 U.S.C. 346a(e), as amended by the Food Quality Protection Act of 1996 (FQPA) (Pub. L. 104–170) announcing the filing of a pesticide tolerance petition by Bioworks Inc., 122 North Genesee Street, Geneva, New York 14456. This notice included a summary of the petition prepared by the petitioner Bioworks, Inc. The petition requested that 40 CFR part 180 be amended by establishing an exemption from the requirement of a tolerance for residues of *Trichoderma harzianum* KRL-AG2 (ATCC #20847) in/on all food commodities. There were no comments received in response to the notice of filing.

I. Risk Assessment and Statutory Findings

New section 408(c)(2)(A)(i) of the FFDCA allows EPA to establish an exemption from the requirement for a tolerance (the legal limit for a pesticide chemical residue in or on a food) only if EPA determines that the tolerance is ''safe.'' Section 408(c)(2)(A)(ii) defines ''safe'' to mean that ''there is a reasonable certainty that no harm will result from aggregate exposure to the pesticide chemical residue, including all anticipated dietary exposures and all other exposures for which there is reliable information.'' This includes exposure through drinking water and in residential settings, but does not include occupational exposure. Section 408(b)(2)(C) requires EPA to give special consideration to exposure of infants and children to the pesticide chemical residue in establishing a tolerance and to ''ensure that there is a reasonable certainty that no harm will result to infants and children from aggregate exposure to the pesticide chemical residue...'' Additionally, section 408 (b)(2)(D) requires that the Agency consider ''available information'' concerning the cumulative effects of a particular pesticide's residues and ''other substances that have a common mechanism of toxicity.''

EPA performs a number of analyses to determine the risks from aggregate exposure to pesticide residues. First, EPA determines the toxicity of pesticides. Second, EPA examines exposure to the pesticide through food, drinking water, and through other exposures that occur as a result of pesticide use in residential settings.

II. Toxicological Profile

Consistent with section 408(b)(2)(D) of FFDCA, EPA has reviewed the available scientific data and other relevant information in support of this action and considered its validity, completeness and reliability and the relationship of this information to human risk. EPA has also considered available information concerning the variability of the sensitivities of major identifiable subgroups of consumers, including infants and children.

This pesticide is currently registered for seed treatments for which an exemption from tolerance exists for certain raw agricultural commodities (40 CFR 180.1102). In PR Notice 95–3, June 7, 1995, the Agency included this active ingredient in a list of low risk pesticides qualifying for reduced restricted entry intervals (REI) depending on the exposure and risk posed to workers. The data submitted to support the initial registration of this product includes three acute rat studies, an acute oral toxicity/pathogenicity study, an acute pulmonary toxicity/pathogenicity study and an acute intravenous toxicity study. The active ingredient is classified as Toxicity Category IV on the basis of those studies. A waiver was granted for the acute dermal toxicity studies.

T. harzianum KRL-AG2 (ATCC #20847) is not known to produce any compounds or metabolites of health concern. This organism controls plant disease by competing with plant pathogens for root and foliar surfaces for the establishment of fungal colonies and by mycoparasitism. There are no known genotoxic or reproductive effects.

III. Aggregate Exposures

In examining aggregate exposure, FFDCA section 408 directs EPA to consider available information concerning exposures from the pesticide residue in food and all other non-occupational exposures, including drinking water from groundwater or surface water and exposure through

pesticide use in gardens, lawns, or buildings (residential and other indoor uses).

Trichoderma harzianum is a naturally occurring fungus. This strain is a typical member of that species. There is no evidence that it presents any risk to animals or humans. This species is present in many different types of environments worldwide. Because of its ubiquitous nature all humans and animals have some natural exposure to the organism. Proposed application methods, uses, and application rates is not likely to result in a sustained increase in the population levels of this organism beyond the naturally occurring background levels of *Trichoderma harzianum*.

A. Dietary Exposure

Dietary exposure is not expected from the use of this microbial pesticide as labeled. The microbial pesticide can be removed by peeling, washing, cooking and processing. Therefore, risk and exposure to humans, infants and children is likely to be minimal.

1. *Food*. Dietary exposure to the microbial pesticide is likely to occur. The lack of acute oral toxicity/pathogenicity, and the ubiquitous nature of the microbial, support the exemption from the requirement of a tolerance for this active ingredient.

2. *Drinking water exposure*. The microorganism *Trichoderma harzianum* KRL-AG2 (ATCC #20847) is common in the soil and may be found in aquatic habitats. Drinking water is not being screened for *Trichoderma harzianum* KRL-AG2 (ATCC #20847) as a potential indicator of microbial contamination. Both percolation through soil and municipal treatment of drinking water would reduce the possibility of exposure to *Trichoderma harzianum* KRL-AG2 (ATCC #20847) through drinking water. Therefore, the potential of significant transfer to drinking water is minimal to nonexistent. However, even if negligible oral exposure should occur through drinking water, the Agency concludes that such exposure would present no risk due to the lack of toxicity and the ubiquitous nature of the microbe.

B. Other Non-Occupational Exposure

Dermal and inhalation exposure and risk to adults, infants and children via treated lawns or recreational areas are likely if the pesticide is used as labeled. However, the pesticide is a naturally occurring microbe and is ubiquitous in the environment. Based on the low toxicity potential as evidenced by the data submitted, the microbial pesticide active ingredient is likely to pose a minimal to nonexistent dermal or inhalation hazard if used as labeled.

IV. Cumulative Effects

Section 408(b)(2)(D)(v) requires that, when considering whether to establish, modify, or revoke a tolerance, the Agency consider ''available information'' concerning the cumulative effects of a particular pesticide's residues and ''other substances that have a common mechanism of toxicity.'' There are several strains of *Trichoderma spp*. registered at this time. While these strains may produce similar metabolites, the likelihood of adverse cumulative effects via a common mechanism of toxicity is likely to be minimal based on the lack of toxicity/pathogenicity potential of the active ingredients.

V. Determination of Safety for U.S. Population, Infants and Children

FFDCA section 408 provides that EPA shall apply an additional tenfold margin of exposure (safety) for infants and children in the case of threshold effects to account for pre- and post-natal toxicity and the completeness of the database unless EPA determines that a different margin of exposure (safety) will be safe for infants and children. In this instance, EPA believes there are reliable data to support the conclusion that there are no threshold effects of concern to infants, children and adults when *Trichoderma harzianum* KRL-AG2 (ATCC #20847) is used as labeled. As a result, the provision requiring an additional margin of exposure does not apply.

VI. Other Considerations

A. Endocrine Disruptors

EPA does not have any information regarding endocrine effects of this microbial pesticide at this time. The Agency is not requiring information on the endocrine effects of this pesticide at this time; and Congress allowed 3 years after August 3, 1996, for the Agency to implement a screening and testing program with respect to endocrine effects.

B. Analytical Method(s)

The registrant has submitted data and analytical methods to identify potential contaminants and to assure that they are within regulatory levels. All batches containing potential human pathogens are to be destroyed.

C. Codex Maximum Residue Level

There are no Codex maximum residue levels for this active ingredient.

D. Conclusions

The Agency has concluded that the use of this pesticide will not pose any adverse health effects to the U.S. population, infants and children, because of the low toxicological profile. As a result, EPA establishes an exemption from tolerance requirements pursuant to FFDCA section 408(j)(3) for *Trichoderma harzianum* KRL-AG2 (ATCC #20847) in/on all food commodities.

VII. Objections and Hearing Requests

The new FFDCA section 408(g) provides essentially the same process for persons to ''object'' to a regulation for an exemption from the requirement of a tolerance issued by EPA under new section 408(d)and as was provided in the old section 408 and in section 409. However, the period for filing objections is 60 days, rather than 30 days. EPA currently has procedural regulations which governs the submission of objections and hearing requests. These regulations will require some modification to reflect the new law. However, until those modifications can be made, EPA will continue to use those procedural regulations with appropriate adjustments to reflect the new law.

Any person may, by June 7, 1999, file written objections to any aspect of this regulation and may also request a hearing on those objections. Objections and hearing requests must be filed with the Hearing Clerk, at the address given under the ''ADDRESSES'' section (40 CFR 178.20). A copy of the objections and/or hearing requests filed with the hearing clerk should be submitted to the OPP docket for this rulemaking. The objections submitted must specify the provisions of the regulation deemed objectionable and the grounds for the objections (40 CFR 178.25). Each objection must be accompanied by the fee prescribed by 40 CFR 180.33(i). EPA is authorized to waive any fee requirement ''when in the judgement of the Administrator such a waiver or refund is equitable and not contrary to the purpose of this subsection.'' For additional information regarding tolerance objection fee waivers, contact James Tompkins, Registration Division (7505C), Office of Pesticide Programs, Environmental Protection Agency, 401 M St., SW., Washington, DC 20460. Office location, telephone number, and e-mail address: Rm. 239, Crystal Mall #2, 1921 Jefferson Davis Hwy., Arlington, VA, (703) 305–5697, tompkins.jim@epa.gov. Requests for waiver of tolerance objection fees should be sent to James Hollins, Information Resources and Services

Division (7502C), Office of Pesticide Programs, Environmental Protection Agency, 401 M St., SW., Washington, DC 20460.

If a hearing is requested, the objections must include a statement of the factual issues(s) on which a hearing is requested, the requestor's contentions on such issues, and a summary of any evidence relied upon by the objector (40 CFR 178.27). A request for a hearing will be granted if the Administrator determines that the material submitted shows the following: There is a genuine and substantial issue of fact; there is a reasonable possibility that available evidence identified by the requestor would, if established resolve one or more of such issues in favor of the requestor, taking into account uncontested claims or facts to the contrary; and resolution of the factual issues(s) in the manner sought by the requestor would be adequate to justify the action requested (40 CFR 178.32). Information submitted in connection with an objection or hearing request may be claimed confidential by marking any part or all of that information as CBI. Information so marked will not be disclosed except in accordance with procedures set forth in 40 CFR part 2. A copy of the information that does not contain CBI must be submitted for inclusion in the public record. Information not marked confidential may be disclosed publicly by EPA without prior notice.

VIII. Public Record and Electronic Submissions

EPA has established a record for this regulation under docket control number [OPP–300823] (including any comments and data submitted electronically). A public version of this record, including printed, paper versions of electronic comments, which does not include any information claimed as CBI, is available for inspection from 8:30 a.m. to 4 p.m., Monday through Friday, excluding legal holidays. The public record is located in Room 119 of the Public Information and Records Integrity Branch, Information Resources and Services Division (7502C), Office of Pesticide Programs, Environmental Protection Agency, Crystal Mall #2, 1921 Jefferson Davis Hwy., Arlington, VA.

Objections and hearing requests may be sent by e-mail directly to EPA at:

opp-docket@epa.gov.

E-mailed objections and hearing requests must be submitted as an ASCII file avoiding the use of special characters and any form of encryption.

The official record for this regulation, as well as the public version, as described in this unit will be kept in paper form. Accordingly, EPA will transfer any copies of objections and hearing requests received electronically into printed, paper form as they are received and will place the paper copies in the official record which will also include all comments submitted directly in writing. The official record is the paper record maintained at the Virginia address in ''ADDRESSES'' at the beginning of this document.

IX. Regulatory Assessment Requirements

A. Certain Acts and Executive Orders

This final rule establishes an exemption from the tolerance requirement under section 408(d) of the FFDCA in response to a petition submitted to the Agency. The Office of Management and Budget (OMB) has exempted these types of actions from review under Executive Order 12866, entitled *Regulatory Planning and Review* (58 FR 51735, October 4, 1993). This final rule does not contain any information collections subject to OMB approval under the Paperwork Reduction Act (PRA), 44 U.S.C. 3501*et seq.*, or impose any enforceable duty or contain any unfunded mandate as described under Title II of the Unfunded Mandates Reform Act of 1995 (UMRA) (Pub. L. 104–4). Nor does it require any prior consultation as specified by Executive Order 12875, entitled *Enhancing the Intergovernmental Partnership* (58 FR 58093, October 28, 1993), or special considerations as required by Executive Order 12898, entitled *Federal Actions to Address Environmental Justice in Minority Populations and Low-Income Populations*(59 FR 7629, February 16, 1994), or require OMB review in accordance with Executive Order 13045, entitled *Protection of Children from Environmental Health Risks and Safety Risks* (62 FR 19885, April 23, 1997).

In addition, since tolerances and exemptions that are established on the basis of a petition under FFDCA section 408(d), such as the exemption in this final rule, do not require the issuance of a proposed rule, the requirements of the Regulatory Flexibility Act (RFA) (5 U.S.C. 601 *et seq.*) do not apply. Nevertheless, the Agency previously assessed whether establishing tolerances, exemptions from tolerances, raising tolerance levels or expanding exemptions might adversely impact small entities and concluded, as a generic matter, that there is no adverse economic impact. The factual basis for the Agency's generic certification for tolerance actions published on May 4, 1981 (46 FR 24950), and was provided to the Chief Counsel for Advocacy of the Small Business Administration.

B. Executive Order 12875

Under Executive Order 12875, entitled *Enhancing the Intergovernmental Partnership* (58 FR 58093, October 28, 1993), EPA may not issue a regulation that is not required by statute and that creates a mandate upon a State, local or tribal government, unless the Federal government provides the funds necessary to pay the direct compliance costs incurred by those governments. If the mandate is unfunded, EPA must provide to OMB a description of the extent of EPA's prior consultation with representatives of affected State, local, and tribal governments, the nature of their concerns, copies of any written communications from the governments, and a statement supporting the need to issue the regulation. In addition, Executive Order 12875 requires EPA to develop an effective process permitting elected officials and other representatives of State, local, and tribal governments ''to provide meaningful and timely input in the development of regulatory proposals containing significant unfunded mandates.''

Today's rule does not create an unfunded Federal mandate on State, local, or tribal governments. The rule does not impose any enforceable duties on these entities. Accordingly, the requirements of section 1(a) of Executive Order 12875 do not apply to this rule.

C. Executive Order 13084

Under Executive Order 13084, entitled *Consultation and Coordination with Indian Tribal Governments* (63 FR 27655, May 19, 1998), EPA may not issue a regulation that is not required by statute, that significantly or uniquely affects the communities of Indian tribal governments, and that imposes substantial direct compliance costs on those communities, unless the Federal government provides the funds necessary to pay the direct compliance costs incurred by the tribal governments. If the mandate is unfunded, EPA must provide OMB, in a separately identified section of the preamble to the rule, a description of the extent of EPA's prior consultation with representatives of affected tribal governments, a summary of the nature of their concerns, and a statement supporting the need to issue the regulation. In addition, Executive Order 13084 requires EPA to develop an effective process permitting elected officials and other representatives of

Indian tribal governments ''to provide meaningful and timely input in the development of regulatory policies on matters that significantly or uniquely affect their communities.''

Today's rule does not significantly or uniquely affect the communities of Indian tribal governments. This action does not involve or impose any requirements that affect Indian tribes. Accordingly, the requirements of section 3(b) of Executive Order 13084 do not apply to this rule.

X. Submission to Congress and the Comptroller General

The Congressional Review Act, 5 U.S.C. 801 *et seq.*, as added by the Small Business Regulatory Enforcement Fairness Act of 1996, generally provides that before a rule may take effect, the Agency promulgating the rule must submit a rule report, which includes a copy of the rule, to each House of the Congress and the Comptroller General of the United States. EPA will submit a report containing this rule and other required information to the U.S. Senate, the U.S. House of Representatives and the Comptroller General of the United States prior to publication of the rule in the **Federal Register**. This rule is not a ''major rule'' as defined by 5 U.S.C. 804(2).

List of Subjects in 40 CFR Part 180

Environmental protection, Administrative practice and procedure, Agricultural commodities, Pesticides and pests, Reporting and recordkeeping requirements.

Dated: March 24, 1999.

Janet L. Andersen,

Director, Biopesticides and Pollution Prevention Division. Office of Pesticide Programs.

Therefore, 40 CFR chapter I is amended as follows:

PART 180—[AMENDED]

1. The authority citation for part 180 continues to read as follows:

Authority: 21 U.S.C. 321(q), 346(a), and 371.

2. Section 180.1102 is revised to read as follows:

§ 180.1102 Trichoderma harzianum KRL-AG2 (ATCC #20847) strain T–22; exemption from requirement of a tolerance.

An exemption from the requirement of a tolerance is established for residues of the biofungicide *Trichoderma harzianum* KRL-AG2 (ATCC #20847); also known as strain T–22 when applied in/or on all food commodities.

[FR Doc. 99–8637 Filed 4–6–99; 8:45 am]

BILLING CODE 6560–50–F

DEPARTMENT OF TRANSPORTATION

National Highway Traffic Safety Administration

49 CFR Part 533

[Docket No. NHTSA–99–5464]

RIN 2127–AH52

Light Truck Average Fuel Economy Standard, Model Year 2001

AGENCY: National Highway Traffic Safety Administration (NHTSA).

ACTION: Final rule.

SUMMARY: This final rule establishes the average fuel economy standard for light trucks manufactured in model year (MY) 2001. The issuance of the standard is required by statute. As required by section 322 of the fiscal year (FY) 1999 DOT Appropriations Act, the light truck standard for MY 2001 is identical to the standard for MY 2000, 20.7 mpg.

DATES: This final rule becomes effective on June 7, 1999.

ADDRESSES: Petitions for reconsideration should be submitted to: Administrator, National Highway Traffic Safety Administration, 400 Seventh Street, S.W., Washington, DC 20590.

FOR FURTHER INFORMATION CONTACT: For non-legal issues, call Henrietta Spinner, Office of Consumer Programs, at (202) 366–0846, facsimile (202) 366–2738, electronic mail ''hspinner@nhtsa.dot.gov''. For legal issues, call Otto Matheke, Office of the Chief Counsel, at 202–366–5263.

SUPPLEMENTARY INFORMATION:

I. Background

In December 1975, during the aftermath of the energy crisis created by the oil embargo of 1973–74, Congress enacted the Energy Policy and Conservation Act. The Act established an automotive fuel economy regulatory program by adding Title V, ''Improving Automotive Efficiency,'' to the Motor Vehicle Information and Cost Saving Act. Title V has been amended and recodified without substantive change as Chapter 329 of Title 49 of the United States Code. Chapter 329 provides for the issuance of average fuel economy standards for passenger automobiles and automobiles that are not passenger automobiles (light trucks).

Section 32902(a) of Chapter 329 states that the Secretary of Transportation shall prescribe by regulation corporate average fuel economy (CAFE) standards for light trucks for each model year. That section also states that ''[e]ach standard shall be the maximum feasible average fuel economy level that the Secretary decides the manufacturers can achieve in that model year.'' (The Secretary has delegated the authority to implement the automotive fuel economy program to the Administrator of NHTSA. 49 CFR 1.50(f).) Section 32902(f) provides that in determining the maximum feasible average fuel economy level, we shall consider four criteria: technological feasibility, economic practicability, the effect of other motor vehicle standards of the Government on fuel economy, and the need of the United States to conserve energy. Using this authority, we have set light truck CAFE standards through MY 2000. See 49 CFR 533.5(a). The standard for MY 2000 is 20.7 mpg.

We began the process of establishing light truck CAFE standards for model years after MY 1997 by publishing an Advance Notice of Proposed Rulemaking (ANPRM) in the **Federal Register**. 59 FR 16324 (April 6, 1994). The ANPRM outlined the agency's intention to set standards for some or all of model years 1998 to 2006.

On November 15, 1995, the Department of Transportation and Related Agencies Appropriations Act for Fiscal Year 1996 was enacted. Pub. L. 104–50. Section 330 of that Act provides:

> None of the funds in this Act shall be available to prepare, propose, or promulgate any regulations . . . prescribing corporate average fuel economy standards for automobiles . . . in any model year that differs from standards promulgated for such automobiles prior to enactment of this section.

We then issued a notice of proposed rulemaking (NPRM) limited to MY 1998, which proposed to set the light truck CAFE standard for that year at 20.7 mpg, the same standard as had been set for MY 1997. 61 FR 145 (January 3, 1996). This 20.7 mpg standard was adopted by a final rule issued on March 29, 1996. 61 FR 14680 (April 3, 1996).

On September 30, 1996, the Department of Transportation and Related Agencies Appropriations Act for Fiscal Year 1997 was enacted. Pub. L. 104–205. Section 323 of that Act provides:

> None of the funds in this Act shall be available to prepare, propose, or promulgate any regulations . . . prescribing corporate average fuel economy standards for automobiles . . . in any model year that differs from standards promulgated for such

automobiles prior to enactment of this section.

On March 31, 1997, we issued a final rule (62 FR 15859) establishing light truck fuel economy standards for the 1999 model year. This final rule was not preceded by an NPRM. The agency concluded that the restriction contained in Section 323 of the FY 1997 Appropriations Act prevented us from issuing any standards other than the standard set for the 1998 model year. Because we had no other course of action, we determined that issuing an NPRM was unnecessary and contrary to the public interest.

On October 27, 1997, the Department of Transportation and Related Agencies Appropriations Act for Fiscal Year 1998 was enacted. Pub. L. 105–66. Section 322 of that Act provided, as did the corresponding sections of the FY 1996 and FY 1997 appropriations acts, that none of the funds appropriated could be used to promulgate any regulations (including fuel economy standards) that differ from those of a prior year. On March 30, 1998, we issued a final rule (63 FR 16699) establishing light truck fuel economy standards for the 2000 model year. This final rule was also not preceded by an NPRM. The agency concluded that the restriction contained in Section 322 of the FY 1998 Appropriations Act prevented us from issuing any standards other than the standard set for the 1999 model year. As was the case in prior years, we determined that issuing an NPRM was unnecessary and contrary to the public interest because we had no other course of action.

On October 21, 1998, the Omnibus Consolidated and Emergency Supplemental Appropriations Act for Fiscal Year 1999 was enacted. Pub. L. 105–277. This law contained the appropriations provisions for the Department of Transportation for the 1999 fiscal year. Section 322 of that Act provides:

> None of the funds in this Act shall be available to prepare, propose, or promulgate any regulations pursuant to title V of the Motor Vehicle Information and Cost Savings Act prescribing corporate average fuel economy standards for automobiles, as defined in such title, in any model year that differs from standards promulgated for such automobiles prior to enactment of this section.

Because light truck CAFE standards must be set no later than eighteen months before the beginning of the model year in question, the deadline for us to set the MY 2001 standard is approximately April 1, 1999. As the agency cannot spend any funds in violation of the terms of Section 322, it cannot undertake any work in preparation of a standard for MY 2001 unless it is identical to the MY 2000 standard. Preparation of any fuel economy standard requires the agency to spend money to determine what the appropriate fuel economy level would be, to analyze the costs and benefits of that standard and to prepare documents and studies regarding the standard. Incurring these costs when the legislation dictates the fuel economy level would not be a productive use of resources. Accordingly, the agency is foregoing any analysis of what the appropriate fuel economy level for MY 2001 might be.

We note that the language contained in Section 322 of the FY 1999 Act is identical to that found in Section 330 of the FY 1996 Appropriations Act and Section 323 of the FY 1997 Appropriations Act. The adoption of identical language in the FY 1998 Act leads us to conclude that Congress considered our prior view of this language to be correct: the limitation precludes NHTSA from setting a light truck standard that differs from one adopted in the previous year.

As explained above, Section 322 precludes NHTSA from preparing, proposing, or issuing any CAFE standard that is not identical to those previously established for MYs 1998, 1999 and 2000. We are therefore establishing the MY 2001 light truck standard through the issuance of this final rule. In our view, the express directive in the FY 1999 Omnibus Appropriations Act stops us from considering a new CAFE standard for the 2001 model year. As we cannot expend any funds to set the 2001 standard at any level other than the MY 2000 standard, issuing a notice of proposed rulemaking and providing an opportunity for notice and comment would be unnecessary and contrary to the public interest. Accordingly, this final rule sets the MY 2001 light truck CAFE standard at the MY 2000 level of 20.7 mpg.

II. Correcting Amendment

In a notice published in the **Federal Register** on April 6, 1994, (59 FR 16313) we established fuel economy standards for light trucks for the 1996 and 1997 model years. The final rule contained in that notice also modified the existing fuel economy standards for light trucks by eliminating the separate category for captive imports and combining all light trucks into a single category. Because of this, § 533.5(a) of Part 533 was modified to replace an existing table, table III—which had a column for captive imports and a column for all other light trucks. However, the regulatory text was not changed to reflect the change to a single category for all light trucks. To correct this oversight, we are amending § 533.5 by adding a new paragraph—533.5(f)—indicating that for the 1996 model year and all subsequent model years, that captive imports and other trucks will be combined into a single category, as shown in table III.

III. Final rule

These regulations are being published as a final rule. Accordingly, the fuel economy standards in Part 533 are fully in effect 30 days after the date of the document's publication. No further regulatory action by the agency is necessary to make these regulations effective.

These regulations have been published as a final rule without prior issuance of a notice of proposed rulemaking because Section 322 of the FY 1999 DOT appropriations act prevents us from issuing any fuel economy standard for the 2001 model year that differs from those in effect for the 2000 model year. Because of this, providing for prior notice and opportunity for comment would have been superfluous.

In the agency's view, vehicle manufacturers and other parties will not be harmed by the agency's decision not to issue an NPRM before issuing a final rule to establish the MY 2001 light truck fuel economy standard. The applicable fuel economy standards established in this final rule do not differ from those established for the prior model year. As these standards cannot be modified by the agency, use of a final rule without a prior NPRM has no impact on the positions of any interested party.

IV. Impact Analyses

A. Economic Impacts

We have not prepared a final economic assessment because of the restrictions imposed by Section 322 of the FY 1999 DOT Appropriations Act. All past fuel economy rules, however, have had economic impacts in excess of $100 million per year. The rule was reviewed by the Office of Management and Budget under Executive Order 12866 and is considered significant under the Department's regulatory procedures. Although we have no discretion under the statute (as well as with respect to the costs it imposes), we are treating this rule as ''economically significant'' under Executive Order 12866 and ''major'' under 5 U.S.C. 801.

B. Environmental Impacts

We have not conducted an evaluation of the impacts of this action under the

National Environmental Policy Act. There is no requirement for such an evaluation where Congress has eliminated the agency's discretion by precluding any action other than the one announced in this document.

C. Impacts on Small Entities

We have not conducted an evaluation of this action pursuant to the Regulatory Flexibility Act. The agency notes that this final rule, which was not preceded by a Notice of Proposed Rulemaking, is not a ''rule'' as defined by the Regulatory Flexibility Act and is, therefore, not subject to its provisions. As Congress has eliminated the agency's discretion by precluding any action other than the one taken in this document, we would not be able to take any action in the event such an analysis supported setting the light truck fuel economy at a different level. Past evaluations indicate, however, that few, if any, light truck manufacturers would have been classified as a ''small business'' under the Regulatory Flexibility Act.

The Regulatory Flexibility Act of 1980 (Public Law 96–354) requires each agency to evaluate the potential effects of a final rule on small businesses. Establishment of a fuel economy standard for light trucks affects motor vehicle manufacturers, few of which are small entities. The Small Business Administration (SBA) has set size standards for determining if a business within a specific industrial classification is a small business. The Standard Industrial Classification code used by the SBA for Motor Vehicles and Passenger Car Bodies (3711) defines a small manufacturer as one having 1,000 employees or fewer.

Very few single stage manufacturers of motor vehicles within the United States have 1,000 or fewer employees. Those that do are not likely to have sufficient resources to design, develop, produce and market a light truck. For this reason, we certify that this final rule would not have a significant economic impact on a substantial number of small entities.

D. Executive Order 12612 (Federalism)

We have analyzed this final rule in accordance with the principles and criteria contained in E.O. 12612, and have determined that this final rule does not have significant Federalism implications to warrant the preparation of a Federalism Assessment. As a historical matter, prior light truck standards have not had sufficient Federalism implications to warrant the preparation of a Federalism Assessment.

E. The Unfunded Mandates Reform Act

The Unfunded Mandates Reform Act of 1995 (Pub. L. 104–4) requires agencies to prepare a written assessment of the costs, benefits and other effects of proposed or final rules that include a Federal mandate likely to result in the expenditure by State, local or tribal governments, in the aggregate, or by the private sector, of more than $100 million annually.

The agency notes that Section 322 of the FY 1999 DOT Appropriations Act precludes the agency from the expenditure of any funds to prepare, propose or promulgate any fuel economy standard that differs from those currently in effect. This directive forbids NHTSA from studying any alternative fuel economy standards other than those presently in force. The agency cannot consider any other alternative standards that may result in lower costs, lesser burdens, or more cost-effectiveness for state, local or tribal governments or the private sector. Furthermore, as we are precluded from expending any funds to prepare an alternative fuel economy standard, it cannot embark on any studies of such alternatives. We have therefore not prepared a written assessment of this final rule for the purposes of the Unfunded Mandates Act.

F. Paperwork Reduction Act

There are no information collection requirements in this final rule.

G. Department of Energy Review

In accordance with 49 U.S.C. 32902(j), We submitted this final rule to the Department of Energy for review. That Department did not make any comments that we have not responded to.

V. Conclusion

Based on the foregoing, we are establishing a combined average fuel economy standard for non-passenger automobiles (light trucks) for MY 2001 at 20.7 mpg.

List of Subjects in 49 CFR Part 533

Energy conservation, Fuel economy, Motor vehicles.

PART 533—[AMENDED]

In consideration of the foregoing, 49 CFR Part 533 is amended as follows:

1. The authority citation for part 533 continues to read as follows:

Authority: 49 U.S.C. 32902; delegation of authority at 49 CFR 1.50.

2. § 533.5 is amended by revising Table IV in paragraph (a) and by adding paragraph (f) to read as follows:

§ 533.5 Requirements.

(a) * * *

TABLE IV

Model year	Standard
1996	20.7
1997	20.7
1998	20.7
1999	20.7
2000	20.7
2001	20.7

* * * * *

(f) For model year 1996 and thereafter, each manufacturer shall combine its captive imports with its other light trucks and comply with the average fuel economy standard in paragraph (a) of this section.

Issued on: April 1, 1999.

Ricardo Martinez,

Administrator.

[FR Doc. 99–8580 Filed 4–2–99; 3:19 pm]

BILLING CODE 4910–59–P

DEPARTMENT OF COMMERCE

National Oceanic and Atmospheric Administration

50 CFR Parts 600 and 660

[Docket No. 981231333–8333–01; I.D. 032599A]

Fisheries off West Coast States and in the Western Pacific; Pacific Coast Groundfish Fishery; Trip Limit Adjustments

AGENCY: National Marine Fisheries Service (NMFS), National Oceanic and Atmospheric Administration (NOAA), Commerce.

ACTION: Fishing restrictions; request for comments.

SUMMARY: NMFS announces changes to the restrictions to the Pacific Coast groundfish limited entry and open access fisheries to clarify landings restrictions north and south of Cape Mendocino, California; in the limited entry fisheries to clarify the canary rockfish cumulative landings limit south of Cape Mendocino; in the open access fisheries, to revise trip limits for *Sebastes* complex species, including yellowtail rockfish, canary rockfish, black rockfish, blue rockfish; revises the trip limits in the pink shrimp exempted trawl open access fishery for overall groundfish, Dover sole, whiting, and sablefish landings; and provides three technical corrections to the annual specifications and management measures. These restrictions are

intended to clarify some of the restrictions within the 1999 annual management measures and to extend the fisheries as long as possible during the year while keeping landings within the 1999 optimum yields (OYs) and allocations for these species.

DATES: Effective 0001 hours local time (l.t.) April 1, 1999. For vessels operating in the B platoon, effective from 0001 hours (l.t.) April 16, 1999. These changes are in effect, unless modified, superseded or rescinded, until the effective date of the 2000 annual specifications and management measures for the Pacific Coast groundfish fishery, which will be published in the **Federal Register**. Comments will be accepted through April 22, 1999.

ADDRESSES: Submit comments to William Stelle, Jr., Administrator, Northwest Region (Regional Administrator), NMFS, 7600 Sand Point Way N.E., BIN C15700, Bldg. 1, Seattle, WA 98115–0070; or William Hogarth, Administrator, Southwest Region, NMFS, 501 West Ocean Blvd., Suite 4200, Long Beach, CA 90802–4213.

FOR FURTHER INFORMATION CONTACT: Katherine King or Yvonne deReynier, Northwest Region, NMFS, 206–526–6140.

SUPPLEMENTARY INFORMATION: The following changes to current management measures (published January 8, 1999 at 64 FR 1316) were recommended by the Pacific Fishery Management Council (Council), in consultation with the States of Washington, Oregon, and California, at its March 9 through 12, 1999, meeting in Portland, OR.

Clarification to the Limited Entry Limit for Canary Rockfish Landed South of Cape Mendocino

For the 1999 annual specifications and management measures, the Council recommended and NMFS adopted limited entry 2-month cumulative limits for the periods beginning April 1, 1999, of 9,000 lb (4,082 kg) for canary rockfish coastwide, and 6,500 lb (2,948 kg) for *Sebastes* species south of Cape Mendocino. Canary rockfish is managed within the *Sebastes* complex and limited by the *Sebastes* complex trip limit, but neither the Council nor NMFS noticed that the coastwide canary rockfish limit for the 2-month periods beginning April 1 exceeded the overall *Sebastes* complex limit for those same 2-month periods in the southern area. The Council recommended at its March 1999 meeting that NMFS correct this discrepancy in time for the beginning of the April 1 through May 31 2-month cumulative limit period. The Council recommended that the cumulative limit for canary rockfish south of Cape Mendocino within a 2-month cumulative limit period not exceed the *Sebastes* complex south of Cape Mendocino cumulative limit for that same period. Consequently, the 2-month cumulative trip limit for canary rockfish south of Cape Mendocino is reduced to 6,500 lb (2,948 kg).

Cape Mendocino Management Line for Sebastes Complex Species

Chilipepper rockfish and splitnose rockfish are separate from the *Sebastes* complex south of Cape Mendocino, and are managed by cumulative limits that do not count toward the *Sebastes* complex limits south of Cape Mendocino. North of Cape Mendocino, chilipepper rockfish and splitnose rockfish are part of the *Sebastes* complex. For the first cumulative limit period of 1999, January 1 through March 31, the overall *Sebastes* complex limit north of Cape Mendocino was 24,000 lb (10,866 kg), the overall *Sebastes* complex limit south of Cape Mendocino was 13,000 lb (5,897 kg), the chilipepper rockfish limit south of Cape Mendocino was 45,000 lb (20,412 kg), and the splitnose rockfish limit south of Cape Mendocino was 32,000 lb (14,515 kg).

Vessels targeting Pacific Coast groundfish generally are not restricted to fishing in particular areas. There are, however, restrictions for vessels that operate in two different management areas, with different cumulative trip limits, but within a single cumulative limit period. The 1999 annual specifications and management measures (64 FR 1316, January 8, 1999) deal with this issue at paragraph IV.A.(12), ''Operating in areas with different trip limits'' with ''cross-over'' provisions at sub-paragraphs (a) and (b):

(a) *Going from a more restrictive to a more liberal area.* If a vessel takes and retains any species of groundfish in an area where a more restrictive trip limit applies, before fishing in an area where a more liberal trip limit (or no trip limit) applies, then that vessel is subject to the more restrictive trip limit for the entire period to which that trip limit applies, no matter where the fish are taken and retained, possessed, or landed.

(b) *Going from a more liberal to a more restrictive area.* If a vessel takes and retains a species (or species complex) in an area where a higher trip limit (or no trip limit) applies, and takes and retains, possesses or lands the same species (or species complex) in an area where a more restrictive trip limit applies, then that vessel is subject to the more restrictive trip limit for that trip limit period.

After the 1999 specifications and management measures went into effect, NMFS began to receive telephone calls from fishing vessel owners and operators who were fishing near the Cape Mendocino management line, wondering how to apply the ''cross-over'' provisions to fishing for *Sebastes* complex species. With the higher overall *Sebastes* complex limit north of Cape Mendocino and the large chilipepper and splitnose rockfish limits south of Cape Mendocino, fishers wanted to know how they could maximize their catch without exceeding landings limits. It became apparent that vessels could take the larger *Sebastes* complex limit north of Cape Mendocino, then move south of Cape Mendocino and catch chilipepper rockfish and/or splitnose rockfish if the bycatch of *Sebastes* were discarded.

After much consideration, NMFS determined that the ''cross-over'' provisions in the 1999 annual specifications and management measures were not specific enough to deal with this particular problem, and asked the Council for clarification at its March 1999 meeting.

At the March 1999 meeting, the Council considered a variety of possible interpretations of how to apply the ''cross-over'' provisions to the different *Sebastes* complex, chilipepper rockfish, and splitnose rockfish limits. The Council primarily wanted to clarify these provisions in a way that would not encourage discards. The Council did not want vessels to first target the higher *Sebastes* complex limit north of Cape Mendocino and then to move south to take chilipepper rockfish and splitnose rockfish and discard *Sebastes* complex species south of Cape Mendocino. Chilipepper rockfish and splitnose rockfish are often caught in association with other *Sebastes* complex species, and if vessels are targeting chilipepper and splitnose without also being allowed to retain *Sebastes* complex species, those *Sebastes* complex species would have to be discarded.

To resolve this issue, the Council recommended revising the 1999 ''cross-over'' provisions to deal specifically with *Sebastes* complex species so that if a vessel takes and retains either chilipepper rockfish and/or splitnose rockfish south of Cape Mendocino, that vessel would be subject to the south of Cape Mendocino *Sebastes* complex limit for the remainder of the cumulative limit period, no matter where it takes and retains, possesses or lands *Sebastes* complex species.

Increases to Open Access Monthly Limits for Sebastes Complex Species

Beginning in 1999, *Sebastes* complex limits for the open access fishery were

unlinked from the limited entry fishery so that open access groundfish landings might be better spread throughout the year. At its November 1998 meeting, the Council had recommended an open access cumulative monthly limit for *Sebastes* complex species north of Cape Mendocino of 3,600 lb (1,633 kg), of which no more than 400 lb (181 kg) per month could be species other than yellowtail or canary rockfish. The Council also recommended that within the *Sebastes* complex limit for north of Cape Mendocino, the monthly cumulative limit for yellowtail rockfish would be 2,600 lb (1,179 kg), and the monthly cumulative limit for canary rockfish would be 1,000 lb (454 kg). After the November Council meeting, an error was discovered in the Pacific Fisheries Information Network (PacFIN) data system, which had wrongly attributed some past rockfish landings to the open access fishery north of Cape Mendocino. As a result of this error, the Council had made its recommendation for the 1999 trip limit based on data that had overestimated landings projections for the open access fishery. The 400 lb (181 kg) limit for species other than yellowtail and canary rockfish within the *Sebastes* complex limit appeared unnecessarily restrictive and burdensome in light of the post-meeting information. For these reasons, NMFS disapproved the 400 lb (181 kg) trip limit and asked the Council to address open access limits north of Cape Mendocino at its March 1999 meeting. NMFS did approve and implement the Council's recommendation for an overall *Sebastes* cumulative trip limit of 3,600 lb (1,633 kg) per month, with the sublimits of 2,600 lb (1,179 kg) of yellowtail rockfish and 1,000 lb (454 kg) of canary rockfish.

At its March 1999 meeting, following corrections of open access landings information, the Council reconsidered open access *Sebastes* complex limits. The Council's Groundfish Management Team (GMT) compared past harvest rates with 1999 allocations for a variety of species and advised the Council that the open access trip limits for *Sebastes* complex species and yellowtail rockfish north of Cape Mendocino and for canary rockfish coastwide would not allow attainment of the open access allocations for these species. For this reason, the Council recommended at its March 1999 meeting to revise the open access cumulative landings limits for *Sebastes* complex species north of Cape Mendocino and for canary rockfish coastwide to an overall *Sebastes* complex limit of 12,000 lb (5,443 kg) per month north of Cape Mendocino and an overall *Sebastes* complex limit of 2,000 lb (907 kg) south of Cape Mendocino, within which: No more than 6,500 lb (2,948 kg) per month may be yellowtail rockfish north of Cape Mendocino; no more than 2,000 lb (907 kg) per month may be canary rockfish coastwide; no more than 3,500 lb (1,588 kg) per month may be black rockfish and blue rockfish north of Cape Mendocino, and no more than 2,000 lb (907 kg) per month may be species other than yellowtail rockfish, canary rockfish, black rockfish and blue rockfish north of Cape Mendocino. Current open access limits for bocaccio south of Cape Mendocino would remain in effect and would continue to count toward the overall *Sebastes* complex limit of 2,000 lb (907 kg) for that area.

Although the sum of the cumulative monthly limits for canary rockfish, yellowtail rockfish, black rockfish and blue rockfish, and other *Sebastes* rockfish is greater than the overall monthly cumulative limit for the *Sebastes* complex north of Cape Mendocino, the overall *Sebastes* complex limit may not be exceeded. Consequently, the monthly cumulative limits for canary rockfish, yellowtail rockfish, black rockfish and blue rockfish, and other *Sebastes* complex species north of Cape Mendocino cannot all be achieved. Similarly, the canary rockfish coastwide limit is equal to the *Sebastes* complex limit south of Cape Mendocino. Any canary rockfish taken south of Cape Mendocino counts against the overall *Sebastes* complex limit, which may not be exceeded.

The adjusted trip limits are calculated to provide a year long fishing opportunity. Pacific Coast groundfish landings are monitored throughout the year, and further adjustments to cumulative trip limits will be made as necessary.

Pink Shrimp Fishery

Groundfish regulations allow shrimp trawlers to retain and land groundfish caught incidentally on fishing trips targeting pink shrimp. Pink shrimp trawls are one of the open access ''exempted'' trawl gears. Under the 1999 management measures, exempted trawl gears are managed under a 300 lb (136 kg) groundfish ''per trip'' limit, including the same daily trip limits for sablefish (300 lb (136 kg) north of 36° N. lat. and 350 lb (159 kg) south of 36° N. lat.) and thornyheads (50 lb) (22.7 kg) per day south of Point Conception) as all other open access gears. This limit was a change from previous years' management measures for pink shrimp trawlers, which had been permitted to multiply the daily trip limit for groundfish by the number of days in the fishing trip.

The pink shrimp fishery has historically been managed to allow landings of incidentally caught groundfish, so that fishers would not be required by regulations to discard those groundfish. At the March 1999 Council meeting, the GMT advised the Council that restricting the pink shrimp fishery to 300 lb (136 kg) of groundfish per trip might force regulatory discards of incidentally caught groundfish, without reducing the discard mortality in the pink shrimp fishery. If management measures for pink shrimp trawlers accommodate landings of incidentally caught groundfish, those landings (by vessels without limited entry permits) are counted against the open access groundfish allocations. Incidentally caught groundfish that are discarded are not measured and are not counted against allocations. However, assumptions are made about overall discards and discards are taken into account when calculating overall harvest. Furthermore, some shrimp fishers testified that groundfish are a historical, desirable component of their shrimp/groundfish fishery and should not be treated as incidental catch. For these reasons, the Council recommended setting a new trip limit for vessels engaged in fishing for pink shrimp with exempted trawl gear at 500 lb (227 kg) of groundfish per day, multiplied by the number of days of the fishing trip, but not to exceed 2,000 lb (907 kg) per trip. The 500 lb (227 kg) per day portion of this limit had been in effect until January 1, 1999. All groundfish landings in the pink shrimp fishery, except for Dover sole and Pacific whiting landings, would continue also to be managed under species-specific daily, monthly, and 2-month cumulative trip limits (including the 1,800 lb (817 kg) 2-month cumulative limit for sablefish), except that the daily trip limit for sablefish north of 36° N. lat. would no longer apply to this fishery. Dover sole and Pacific whiting landings would be constrained by the per trip groundfish limit. The Council further recommended that, in any landing by vessels engaged in fishing for pink shrimp, the amount of groundfish landed not exceed the amount of pink shrimp landed.

Groundfish Taken by Exempted Trawl Gears Outside of the Pink Shrimp Fishery

In addition to the pink shrimp fishery, groundfish may be landed by vessels using exempted trawl gear in fisheries targeting spot and ridgeback prawns,

California halibut, and sea cucumber. The Council considered restricting landings of groundfish taken in all exempted trawl fisheries so that in any landing, the amount of groundfish landed would not exceed the amount of the target species landed. This issue was tabled until the April 1999 Council meeting, so that the Council could have the benefit of advice from its Groundfish Advisory Panel.

Inseason Trip Limit Adjustments Between Council Meetings

The 1999 cumulative trip limit periods for the limited entry fishery include 2-month cumulative limit periods for April-May, June-July, and August-September. During those periods, Council meetings are scheduled for April, June, and September, which means that the Council could only make inseason adjustments at its April meeting for June 1 and at its June meeting for August 1. At its March 1999 meeting, the Council's GMT recommended that the Council plan to make no trip limit adjustments at the April meeting, because landings data from the January 1 through March 31 cumulative limit period would not be available until after that meeting. To allow itself more flexibility for inseason adjustments, the Council decided that if it wants the opportunity to adjust trip limits before June 1, a conference call could be conducted with individuals identified by the Council to recommend adjustments based on recommendations from the May 1999 GMT meeting. A similar conference call could be scheduled in July if GMT recommendations from the July 1999 GMT meeting suggest that inseason adjustments are necessary.

Corrections to the 1999 Specifications and Management Measures

This document also contains three technical corrections to the 1999 annual specifications and management measures (64 FR 1316, January 8, 1999). The definition of a daily trip limit at Section IV, under A.(1)(b) states that under a daily trip limit, only two landings of groundfish may be made in a 24-hour period. This was a mistake. For years, under a daily trip limit, only one landing could be made in a 24-hour period, and that restriction was not changed for 1999. Therefore, a correction is being made in this document to the definition of ''daily trip limit'' to restrict the number of landings under a daily trip limit to one in a 24-hour period.

The second mistake is in Section IV, under A.(1)(c)(i)(C), which states that in 1999, limited entry permit transfers take effect on the first day of a major cumulative limit period, and that those days in 1999 are January 1, April 1, June 1, August 1, October 1, November 1, and December 1. According to the groundfish regulations at 50 CFR 660.333 (c)(1), ''* * * Transfers of permits designated as participating in the ''B'' platoon will become effective on the first day of the next ''B'' platoon major limited entry cumulative limit period following the date of the transfer * * *'' Therefore, a correction has been made to this section of the annual specifications to include the effective dates of transfer for those vessels participating in the ''B'' platoon.

The third mistake is in Section IV, under B.(2)(b), which reads, ''Harvest of all *Sebastes* complex species (except bocaccio), including those species with their own cumulative limits (yellowtail rockfish, canary rockfish, bocaccio), count toward the overall applicable *Sebastes* cumulative limits for the areas north and south of Cape Mendocino.'' This sentence is internally inconsistent, and is also inconsistent with the next paragraph, which makes clear that bocaccio do count toward the overall *Sebastes* limit. Therefore, this section is being modified to clarify that bocaccio count toward the overall *Sebastes* complex limits.

NMFS Action

For the reasons stated above, NMFS concurs with the Council's recommendations and announces the following changes to the 1999 annual management measures (64 FR 1316, January 8, 1999, as amended). The annual management measures are modified as follows:

1. In section IV, under A. *General Definitions and Provisions*, paragraphs (1)(b) and (1)(c)(i)(C) are revised, paragraph (12) introductory text is revised, and paragraph (12)(c) is added to read as follows:

A. General Definitions and Provisions

* * * * *

(1) * * *

(b) *A daily trip limit* is the maximum amount that may be taken and retained, possessed, or landed per vessel in 24 consecutive hours, starting at 0001 local time. Only one landing of groundfish may be made in that 24-hour period. Daily trip limits may not be accumulated during multiple day trips.

(c) * * *

(i) * * *

(C) *Permit transfers.* For the purposes of the restriction that limited entry permit transfers are to take effect only on the first day of a major cumulative limit period (50 CFR 660.333 (c)(1)), those days in 1999 are January 1, April 1, June 1, August 1, October 1, November 1, and December 1. For vessels with permits authorized to participate in the ''B'' platoon, those days in 1999 are January 16, April 16, June 16, August 16, October 16, November 16, and December 16.

* * * * *

(12) *Operating in areas with different trip limits.* Trip limits for a species or species complex may differ in different geographic areas along the coast. The following ''crossover'' provisions apply to vessels operating in different geographical areas that have different cumulative or ''per trip'' trip limits for the same species or species complex, unless otherwise specified as in paragraph (c) for chilipepper and splitnose rockfishes and the *Sebastes* complex. * * *

* * * * *

(c) *Chilipepper Rockfish, Splitnose Rockfish and the Sebastes Complex.* If a vessel takes and retains, possesses, or lands any splitnose or chilipepper rockfish south of Cape Mendocino, then the more restrictive *Sebastes* complex cumulative trip limit applies during the same cumulative limit period, no matter where the *Sebastes* complex is taken and retained, possessed, or landed.

* * * * *

2. In section IV, under B. *Limited Entry Fishery*, paragraph B.(2)(b) and table 3 under B.(2)(b)(i) are revised to read as follows:

B. Limited Entry Fishery

* * * * *

(2) * * *

(b) *Trip limits for the Sebastes complex.* Harvest of all *Sebastes* complex species, including those species with their own cumulative limits (yellowtail rockfish, canary rockfish, bocaccio), count toward the overall applicable *Sebastes* cumulative limits for the areas north and south of Cape Mendocino. Crossover provisions for operating on both sides of Cape Mendocino during a cumulative trip limit period are found in Section IV, paragraph (A)(12), with special provisions for chilipepper rockfish, splitnose rockfish, and the *Sebastes* complex.

(i) *Trip limits for the Sebastes complex except bocaccio.* The cumulative trip limits for the *Sebastes* complex and its component species are as follows, unless otherwise announced in the **Federal Register**:

TABLE 3.—SEBASTES COMPLEX AND ITS COMPONENT SPECIES

[except bocaccio]

Phase	Cumulative trip limit periods	Cumulative Trip Limits (in pounds)					Length of Cumulative trip limit period
		Sebastes complex (north and south of Cape Mendocino)		Yellowtail rockfish [1] (north of Cape Mendocino)	Canary rockfish [1] (coastwide)		
		North	South		North	South	
I	Jan 1–Mar 31	24,000 (10,886 kg)	13,000 (5,897 kg)	15,000 (6,804 kg)	9,000 (4,082 kg)	9,000 (4,082 kg)	3 months.
II	Apr 1–May 31	25,000	6,500	13,000	9,000	6,500	2 months.
	June 1–July 31	25,000	6,500	13,000	9,000	6,500	2 months.
	Aug 1–Sept 30	25,000 (11,340 kg)	6,500 (2,948 kg)	13,000 (5, 897 kg)	9,000 (4,082 kg)	6,500 (2,948 kg)	2 months.
III	Oct 1–31	10,000	5,000	5,000	3,000	3,000	1 month.
	Nov 1–30	10,000	5,000	5,000	3,000	3,000	1 month.
	Dec 1–31	10,000 (4,536 kg)	5,000 (2,268 kg)	5,000 (2,268 kg)	3,000 (1,361 kg)	3,000 (1,361 kg)	1 month.

[1] Also counts toward the overall *Sebastes* complex limit, which may not be exceeded.

* * * * *

3. In section IV, under C. *Trip limits in the Open Access Fishery*, paragraphs C.(1)(d)(i), C.(1)(g), C.(2), C.(4), C.(5), and the heading of paragraph C.(6) are revised, and paragraph C.(7) is added to read as follows:

C. Trip Limits in the Open Access Fishery

* * * * *

(1) * * *

(d) *Sebastes complex*—(i) *Cumulative monthly limits.* The cumulative monthly limit for the *Sebastes* complex is 12,000 lb (5,443 kg) per vessel north of Cape Mendocino, and 2,000 lb (907 kg) per vessel south of Cape Mendocino. Within the cumulative trip limit for the *Sebastes* complex, no more than 2,000 lb (907 kg) per month may be canary rockfish coastwide, no more than 6,500 lb (2,948 kg) per month may be yellowtail rockfish north of Cape Mendocino, no more than 3,500 lb (1,588 kg) per month may be black rockfish and blue rockfish combined north of Cape Mendocino, no more than 2,000 lb (907 kg) per month may be *Sebastes* complex species other than yellowtail rockfish, canary rockfish, black rockfish and blue rockfish north of Cape Mendocino, and no more than 500 lb (227 kg) per month may be bocaccio south of Cape Mendocino (except for setnet or trammel net gear—see IV.C.(1)(d)(ii) below). [Note: The sum of the cumulative monthly limits for canary rockfish, yellowtail rockfish, black rockfish and blue rockfish, and other *Sebastes* rockfish is greater than the overall monthly cumulative limit for the *Sebastes* complex north of Cape Mendocino, which may not be exceeded. Consequently, the monthly cumulative limits for canary rockfish, yellowtail rockfish, black rockfish and blue rockfish, and other Sebastes complex species north of Cape Mendocino cannot all be achieved. Similarly, the canary rockfish coastwide limit is equal to the *Sebastes* complex limit south of Cape Mendocino. Any canary rockfish taken south of Cape Mendocino counts against the overall *Sebastes* complex limit, which may not be exceeded.]

* * * * *

(g) *Black rockfish.* The trip limit at 50 CFR 660.323(a)(i) for black rockfish caught with hook-and-line gear also applies and is counted toward the cumulative *Sebastes* limits, as stated in paragraph IV.C.(1)(d). (The black rockfish limit is also stated in paragraph IV.B.(9))

(2) *Sablefish.* The 2-month cumulative limit periods for sablefish taken in the open access fishery are the same as those stated above for the limited entry nontrawl fishery at paragraph IV.B.(6)(d)(ii).

(a) *Hook-and-line, pot, setnet, trammel net, exempted trawl gears used by vessels engaged in fishing for spot and ridgeback prawns, California halibut, or sea cucumber.* The following trip limits apply to all open access gear, except for exempted trawl gear used by vessels engaged in fishing for pink shrimp.

(i) *North of 36°00′ N. lat.* North of 36°00′ N. lat., the daily trip limit for sablefish is 300 lb (136 kg), which counts toward a cumulative trip limit of 1,800 lb (816 kg) per 2-month period.

(ii) *South of 36°00′ N. lat.* The daily trip limit for sablefish taken and retained south of 36°00′ N. lat. is 350 lb (159 kg). [Note: All sablefish taken by vessels engaged in fishing for spot and ridgeback prawns, California halibut, or sea cucumber with exempted trawl gear may not exceed and counts against the 300 lb (136 kg) per trip limit for groundfish specified below at paragraph IV.C.(6).]

(b) *Sablefish taken by vessels engaged in fishing for pink shrimp with exempted trawl gear.* North of 36° N. lat., the cumulative trip limit for sablefish is 1,800 lb (816 kg) per 2-month period. South of 36° N. lat., the daily trip limit for sablefish is 350 lb (159 kg) per day, which may not be multiplied by the number of days in the trip.

* * * * *

(4) *Dover sole.* The monthly cumulative limit for Dover sole is 100 lb (45 kg) and applies to all open access gear, except for vessels engaged in fishing for pink shrimp with exempted trawl gear, which are constrained by the overall groundfish limits in paragraph IV.C.(7).

(5) *Pacific whiting.* The monthly cumulative limit for Pacific whiting is 100 lb (45 kg), and applies to all open access gear, except for vessels engaged in fishing for pink shrimp with exempted trawl gear, which are constrained by the overall groundfish limits in paragraph IV.C.(7).

(6) *Groundfish taken with exempted trawl gear by vessels engaged in fishing for spot and ridgeback prawns, California halibut, and sea cucumbers*

* * *

* * * * *

(7) *Groundfish taken with exempted trawl gear by vessels engaged in fishing for pink shrimp.* The trip limit for a vessel engaged in fishing for pink shrimp is 500 lb (227 kg) of groundfish per day, multiplied by the number of days of the fishing trip, but not to exceed 2,000 lb (907 kg) per trip. In addition, no other open access limits may be exceeded by a vessel engaged in fishing for pink shrimp, except for the

limits for Dover sole and Pacific whiting, landings of which are constrained by the per trip groundfish limits. In any landing by vessels engaged in fishing for pink shrimp, the amount of groundfish landed may not exceed the amount of pink shrimp landed. [Note: Although vessels engaged in fishing for pink shrimp were permitted to retain thornyheads in the latter half of 1998, retention of thornyheads north of Pt. Conception is prohibited for this and all other open access fisheries in 1999.]

* * * * *

Classification

These actions are authorized by the regulations implementing the Pacific Coast Groundfish Fishery Management Plan. The determination to take these actions is based on the most recent data available. The aggregate data upon which the determinations are based are available for public inspection at the office of the Administrator, Northwest Region, NMFS (see **ADDRESSES**) during business hours. Because of the need for immediate action to implement these changes at the beginning of the April through May 2-month cumulative limit period, and because the public had an opportunity to comment on the action at the March 1999 Council meeting, NMFS has determined that good cause exists for this document to be published without affording a prior opportunity for public comment or a 30-day delayed effectiveness period. These actions are taken under the authority of 50 CFR 660.323 (b)(1), and are exempt from review under E.O. 12866.

Authority: 16 U.S.C. 1801 *et seq.*

Dated: March 31, 1999.

Richard W. Surdi,

Acting Director, Office of Sustainable Fisheries, National Marine Fisheries Service.

[FR Doc. 99–8429 Filed 4–1–99; 4:20 pm]

BILLING CODE 3510–22–P

Proposed Rules

Federal Register
Vol. 64, No. 66
Wednesday, April 7, 1999

This section of the FEDERAL REGISTER contains notices to the public of the proposed issuance of rules and regulations. The purpose of these notices is to give interested persons an opportunity to participate in the rule making prior to the adoption of the final rules.

DEPARTMENT OF THE TREASURY

Customs Service

19 CFR PART 19

RIN 1515–AC41

Customs Bonded Warehouses

AGENCY: U.S. Customs Service, Department of the Treasury.

ACTION: Proposed rule.

SUMMARY: This document proposes to amend the Customs Regulations regarding the filing of certain inventory reports by bonded warehouse proprietors. Instead of requiring that these reports be filed with Customs, the document proposes that bonded warehouse proprietors maintain these inventory reports after their preparation. In some instances when the inventory report is prepared a letter must be submitted to Customs certifying that the report has been prepared. As proposed to be amended, the port director would be the Customs officer to whom certification letters must be submitted and to whom the annual report covering smelting or refining operations should be submitted. These proposed changes and other changes proposed in this document are intended to simplify inventory recordkeeping procedures for warehouse proprietors and are consistent with Customs movement toward a post-audit environment and the spirit of ''shared responsibility'' embodied in the Customs Modernization provisions of the North American Free Trade Agreement Implementation Act.

DATES: Comments must be received on or before June 7, 1999.

ADDRESSES: Written comments may be addressed to and inspected at the Regulations Branch, U.S. Customs Service, 1300 Pennsylvania Avenue, NW., 3rd Floor, Washington, D.C. 20229.

FOR FURTHER INFORMATION CONTACT: Edward Bowles, Senior Auditor, Regulatory Audit Division, (202–927–0071).

SUPPLEMENTARY INFORMATION:

Background

This document proposes several amendments to part 19, Customs Regulations (19 CFR part 19), concerning the submission to Customs of certain inventory reports covering merchandise in a bonded warehouse. Instead of requiring that certain reports be filed with Customs, the document proposes to amend the Customs Regulations to require that bonded warehouse proprietors maintain these inventory reports after their preparation. In certain instances, when the inventory report is prepared, a letter must be submitted to Customs certifying that the report has been prepared. As proposed to be amended, the port director would be the Customs officer to whom certification letters must be submitted and to whom the annual report covering smelting or refining operations should be submitted. These proposed changes and other changes proposed in this document are intended to simplify inventory recordkeeping procedures for warehouse proprietors and are consistent with Customs movement toward a post-audit environment and the spirit of ''shared responsibility'' embodied in the Customs Modernization provisions of the North American Free Trade Agreement Implementation Act (Pub. L. 103–182).

Warehouse Proprietor's Submission

The principal change proposed in this document concerns the Warehouse Proprietor's Submission on Customs Form (CF) 300. Currently, § 19.12(g) of the Customs Regulations requires certain bonded warehouse proprietors to file annually the CF 300 with the field director of regulatory audit within 45 days from the end of the proprietor's business year. The CF 300 describes all merchandise in the beginning and ending inventory and all merchandise covered by entries opened and closed during the year which do not appear in the beginning or ending inventory.

Section 19.12(g) also provides that these proprietors may submit an alternative format concerning the inventory information required on the CF 300 if the field director of regulatory audit first gives written approval to use an alternative format.

Section 19.12(d)(3) requires, with certain exceptions, that duties and taxes applicable to any non-extraordinary shortage of, or damage to, merchandise in a warehouse be paid when the CF 300 is due, or at any time prior to the annual filing of the CF 300 or certified annual reconciliation.

This document proposes to amend § 19.12(g) to no longer require the submission of the CF 300 by these warehouse proprietors. The proposed amendment would still require these warehouse proprietors to prepare the CF 300 within 45 calendar days from the end of these proprietors' business years; but instead of requiring these proprietors to submit it to Customs within that time frame, the proposed amendment would require these proprietors to retain the document and submit to the port director within 10 days of the preparation of the CF 300 a letter certifying that the CF 300 has been prepared, is available for Customs review, and is accurate.

The document also proposes to amend § 19.12(g) to provide that these warehouse proprietors would no longer need Customs permission in order to use an alternative format to the CF 300. Of course, under the proposed amendment, if an alternative format is used, a similar letter would need to be submitted to Customs within 10 days of the preparation of the alternate format certifying that the alternate to the CF 300 has been prepared, is available for Customs review and is accurate.

Section 19.12(d)(3) is proposed to be amended to provide that duties and taxes applicable to any non-extraordinary shortage of, or damage to, merchandise in a warehouse be reported to Customs no later than the date the letter is due to Customs certifying that the CF 300 or alternate has been prepared.

Annual Reconciliation Report

Section 19.12(h)(1) concerns the requirement of certain other warehouse proprietors to prepare an annual reconciliation report, rather than the CF 300, and establishes the date by which the report must be prepared. Section 19.12(h)(1) currently allows for these warehouse proprietors to apply to the field director of regulatory audit for an extension of time within which to prepare the report and § 19.12(h)(3) requires these proprietors to submit a letter to the field director of regulatory

audit certifying that the annual reconciliation report has been prepared.

This document proposes to amend § 19.12(h)(1) to make port directors, rather than field directors of regulatory audit, responsible for approving extensions of time within which reconciliation reports must be prepared. The document proposes to amend § 19.12(h)(3) to require that the certification letter be submitted to the port director.

Smelting and Refining Warehouses

This document also proposes two changes regarding the submission of inventory reports by bonded smelting and refining warehouses. One proposed change concerns the filing of a monthly report and the other concerns the filing of an annual report.

Section 19.17(g) currently provides that where two or more smelting and refining warehouses are included under one blanket smelting and refining bond, an overall monthly statement of inventory and bond charges must be filed by the principal named in the bond with each involved Field Director, Regulatory Audit, showing the inventory at each plant covered by the bond. Furthermore, § 19.17(g) provides that each port director at whose port a plant or plants are located is responsible for determining the correctness of the inventory report covering merchandise at those plants under his jurisdiction.

As proposed to be amended by this document, § 19.17(g) would no longer require the proprietor named as principal in the bond to file the monthly statement with any Field Director, Regulatory Audit, but would instead require the proprietor to maintain the monthly statement after its preparation. In addition, § 19.17(g) would be changed to make clear, as is currently the case, that if the warehouses covered by an overall statement are located in more than one port, each port director may choose to verify the accuracy of the inventory report only with respect to that portion of the report that relates to amounts held at a plant that is located within that port director's jurisdiction.

Section 19.19(b) currently requires that an annual report covering the smelting or refining operations conducted by each manufacturer be submitted to the Field Director, Regulatory Audit. As proposed to be amended by this document, the regulations would no longer require the annual report to be submitted to the Field Director, Regulatory Audit. Instead, the annual report would be filed with the port director.

Other Amendments

Section 19.12(d)(3) currently refers to the filing of the annual reconciliation when the filing of the annual reconciliation is not required. Accordingly, this document proposes to remove the reference to the filing of the annual reconciliation from that paragraph.

Also, § 19.12(d)(3) currently includes a cross-reference to paragraph (f) of that section in relation to the annual reconciliation report. However, the annual reconciliation report is dealt with in paragraph (h) of that section, not paragraph (f). Accordingly, this document proposes to replace the cross-reference to paragraph (f) in § 19.12(d)(3) with a cross-reference to paragraph (h).

Comments

Before adopting the proposal, consideration will be given to any written comments that are timely submitted to Customs. Customs specifically requests comments on the clarity of this proposed rule and how it may be made easier to understand. Comments submitted will be available for public inspection in accordance with the Freedom of Information Act (5 U.S.C. 552), § 1.4, Treasury Department Regulations (31 CFR 1.4), and § 103.11(b), Customs Regulations (19 CFR 103.11(b)), on regular business days between the hours of 9:00 a.m. and 4:30 p.m. at the Regulations Branch, U.S. Customs Service, 1300 Pennsylvania Avenue, NW., 3rd Floor, Washington, D.C.

The Regulatory Flexibility Act and Executive Order 12866

The proposed amendments are intended to simplify inventory recordkeeping procedures for warehouse proprietors and be consistent with Customs movement toward a post-audit environment and the spirit of ''shared responsibility'' embodied in the Customs Modernization provisions of the North American Free Trade Agreement Implementation Act. As such, pursuant to the provisions of the Regulatory Flexibility Act (5 U.S.C. 601 *et seq.*), it is hereby certified that the proposed rule, if adopted, will not have a significant economic impact on a substantial number of small entities. Accordingly, it is not subject to the regulatory analysis or other requirements of 5 U.S.C. 603 and 604. Nor does the proposed rule result in a ''significant regulatory action'' under E.O. 12866.

Paperwork Reduction Act

The collections of information contained in this notice of proposed rulemaking have been previously reviewed and approved by the Office of Management and Budget (OMB) in accordance with the Paperwork Reduction Act of 1995 and assigned the following OMB control numbers: 1515–0093 for bonded warehouse proprietor's submission; 1515–0121 for information to be supplied by owner or lessee in support of application to establish a bonded warehouse facility; 1515–0127 for application by manufacturer to bond (or discontinue a previously bonded) establishment engaged in the smelting or refining of metal-bearing materials; and 1515–0135 for record of smelting or refining operation showing receipt and disposition of each shipment of material. This document restates the collections of information without substantive change.

An agency may not conduct or sponsor, and a person is not required to respond to, a collection of information unless it displays a valid control number assigned by OMB.

Although this document restates the collections of information without substantive change, comments are specifically requested concerning: (a) Whether the collections of information are necessary for the proper performance of the functions of the agency, including whether the information will have practical utility; (b) how to enhance the quality, utility, and clarity of the information to be collected; (c) how to minimize the burden of complying with the collections of information, including through the application of automated collection techniques or other forms of information technology; and (d) estimates of capital or start-up costs and costs of operation, maintenance, and purchase of services to provide information.

Comments concerning suggestions for reducing the burden of the collections of information should be sent to the Regulations Branch, Office of Regulations and Rulings, U.S. Customs Service, 1300 Pennsylvania Avenue, NW., 3rd Floor, Washington, D.C. 20229. A copy should also be sent to U.S. Customs Service, Information Services Group, Attention: J. Edgar Nichols, Room 3.2–C, 1300 Pennsylvania Avenue, NW., Washington, D.C. 20229. Comments should be submitted within the same time frame that comments are due regarding the substance of the proposal.

List of Subjects in 19 CFR Part 19

Customs duties and inspection, Exports, Freight, Imports, Reporting and recordkeeping requirements, Warehouses.

Proposed Amendments to the Regulations

It is proposed to amend part 19, Customs Regulations (19 CFR part 19), as set forth below.

PART 19—CUSTOMS WAREHOUSES, CONTAINER STATIONS, AND CONTROL OF MERCHANDISE THEREIN

1. The general authority citation for part 19, and the relevant sectional authority citation, would continue to read as follows:

Authority: 5 U.S.C. 301; 19 U.S.C. 66, 1202 (General Note 20, Harmonized Tariff Schedule of the United States), 1624.

* * * * *

Sections 19.17–19.25 also issued under 19 U.S.C. 1312;

* * * * *

2. It is proposed to amend § 19.12 by revising the seventh and eighth sentences of paragraph (d)(3), by revising the first sentence of paragraph (g), adding a sentence thereafter, and revising the last sentence of paragraph (g), and by revising the first sentence, respectively, of paragraphs (h)(1) and (h)(3), to read as follows:

§ 19.12 Inventory control and recordkeeping system.

* * * * *

(d) *Accountability for merchandise in a warehouse.* * * *

(3) *Theft, shortage, overage or damage.* * * * The proprietor must also record all shortages and overages as required in the Customs Form 300 or annual reconciliation report under paragraph (g) or (h) of this section, as appropriate. Duties and taxes applicable to any non-extraordinary shortage or damage and not required to be paid earlier must be reported and submitted to the port director no later than the date the certification of preparation of Customs Form 300 is due or at the time the certification of preparation of the annual reconciliation report is due, as prescribed in paragraph (g) or (h) of this section. * * *

* * * * *

(g) *Warehouse proprietor submission.* Except as otherwise provided in paragraph (h) of this section or § 19.19(b) of this part, the warehouse proprietor must prepare a Warehouse Proprietor's Submission on Customs Form (CF) 300 within 45 calendar days from the end of the business year and maintain the Submission on file for 5 years from the end of the business year covered by the Submission. The proprietor must submit to the port director, within 10 business days after preparation of the CF 300, a letter signed by the proprietor certifying that the CF 300 has been prepared, is available for Customs review, and is accurate. * * * An alternative format may be used for providing the information required on the CF 300.

(h) *Annual reconciliation.* * * *

(1) *Report.* Instead of preparing Customs Form 300 as required under paragraph (g) of this section, the proprietor of a class 2, importers' private bonded warehouse, and proprietors of classes 4, 5, 6, 7, 8, and 9 warehouses if the warehouse proprietor and the importer are the same party, must prepare a reconciliation report within 90 days after the end of the fiscal year unless the port director authorizes an extension for reasonable cause. * * *

* * * * *

(3) *Certification.* The proprietor must submit to the port director within 10 business days after preparation of the annual reconciliation report, a letter signed by the proprietor certifying that the annual reconciliation has been prepared, is available for Customs review, and is accurate. * * *

* * * * *

3. It is proposed to amend § 19.17 by revising the first and second sentences of paragraph (g) to read as follows:

§ 19.17 Application to establish warehouse; bond.

* * * * *

(g) *Statement of inventory and bond charges.* Where two or more smelting or refining warehouses are included under one blanket smelting and refining bond, an overall statement must be prepared and maintained by the principal named in the bond by the 28th of each month, showing the inventory as of the close of the preceding month, of all metals on hand at each plant covered by the blanket bond and the total of bonded charges for all plants. If the warehouses covered by an overall statement are located in more than one port, each port director may choose to verify the accuracy of the inventory report only with respect to that portion of the report that relates to amounts held at a plant that is located within that port director's jurisdiction. * * *

4. It is proposed to amend § 19.19 by revising the first sentence of paragraph (b) to read as follows:

§ 19.19 Manufacturers' records; annual statement.

* * * * *

(b) Every manufacturer engaged in smelting or refining, or both, must prepare and submit to the port director at the port nearest which the plant is located an annual statement for the fiscal year for the plant involved not later than 60 days after the termination of that fiscal year. * * *

Raymond W. Kelly,

Commissioner of Customs.

Approved: March 12, 1999.

John P. Simpson,

Deputy Assistant Secretary of the Treasury.

[FR Doc. 99–8517 Filed 4–6–99; 8:45 am]

BILLING CODE 4820–02–P

DEPARTMENT OF TRANSPORTATION

Federal Highway Administration

23 CFR Part 777

[FHWA Docket No. FHWA–97–2514; 96–8]

RIN 2125–AD78

Mitigation of Impacts to Wetlands and Natural Habitat

AGENCY: Federal Highway Administration (FHWA), DOT.

ACTION: Supplemental notice of proposed rulemaking (SNPRM); request for comments.

SUMMARY: The FHWA is further supplementing its June 17, 1996, notice of proposed rulemaking (NPRM), Mitigation of Impacts to Wetlands, and June 18, 1997, supplemental notice of proposed rulemaking (SNPRM) on the same subject, as described in the **SUPPLEMENTARY INFORMATION.** This SNPRM also updates the FHWA's wetlands regulation to conform with wetland and natural habitat mitigation provisions contained in the recently enacted Transportation Equity Act for the 21st Century (TEA–21).

DATES: Comments must be received on or before June 7, 1999.

ADDRESSES: All signed, written comments must refer to the docket number appearing at the top of this document. Submit all comments to the Docket clerk, U.S. DOT Dockets, Room PL–401, 400 Seventh Street, SW., Washington, DC 20590–0001. All comments received will be available for examination at the above address between 10 a.m. and 5 p.m., e.t., Monday through Friday, except Federal holidays. Those desiring notification of receipt of comments must include a self-addressed, stamped envelope or postcard.

FOR FURTHER INFORMATION CONTACT: Mr. Paul Garrett, Office of Natural Environment, HENE, (303) 969–5772, extension 332, or Mr. Brett Gainer, Office of the Chief Counsel, HCC–31, (202) 366–1372, Federal Highway Administration, 400 Seventh Street, SW., Washington, D.C. 20590. Office hours are from 7:45 a.m. to 4:15 p.m., e.t., Monday through Friday, except Federal holidays.

SUPPLEMENTARY INFORMATION:

Electronic Access

Internet users can access all comments received by the U.S. DOT Dockets, Room PL–401, by using the universal source locator (URL): http://dms.dot.gov. It is available 24 hours each day, 365 days a year. Please follow the instructions online for more information and help.

An electronic copy of this document may be downloaded using a modem and suitable communications software from the Government Printing Office's Electronic Bulletin Board Service at (202)–512–1661. Internet users may reach the **Federal Register**'s home page at: http://www.nara.gov/fedreg and the Government Printing Office's database at http://www.access.gpo.gov/nara.

I. The Rulemaking Process

This rulemaking would amend the FHWA's regulation on wetlands mitigation to conform with the provisions of the Intermodal Surface Transportation Efficiency Act (ISTEA) (Pub. L. 102–240, 105 Stat.1914), TEA–21, and state-of-the-art practices in wetland science, technology, and management.

II. Public Participation

An NPRM on this subject was published in the **Federal Register** on June 17, 1996 (61 FR 30553). The comment period was from June 17 through August 16, 1996. Subsequently, an SNPRM was published in the **Federal Register** on June 18, 1997 (62 FR 33047). The comment period for this SNPRM was from June 18 through August 18, 1997.

In its June 17, 1996, NPRM and June 18, 1997, SNPRM, the FHWA proposed to amend 23 CFR part 777, Mitigation of Impacts to Privately owned Wetlands, in order to update the current, out-dated regulations in light of changes brought about by the ISTEA. Specifically, the June 17, 1996, NPRM proposed revision to the previous regulation (23 CFR part 777) to conform to ISTEA, thereby providing more flexibility to State Departments of Transportation (DOT) in determining eligibility of mitigation alternatives for Federal participation. The NPRM proposed broadening the scope of the regulation to encompass all wetland mitigation projects eligible for Federal participation, not just those involving privately owned wetlands. The June 18, 1997 SNPRM proposed to clarify the scope of the FHWA's wetlands regulations by specifying that they apply to all projects funded pursuant to the provisions of title 23, United States Code (Title 23). The rulemaking proposed also to make a technical amendment to the text of the June 17, 1996 NPRM.

Recently, TEA–21 (Pub. L. 105–178, 112 Stat. 107) added funding eligibility under the NHS and STP programs for mitigation of impacts on natural habitats due to highway projects funded under title 23, U.S.C. This rulemaking would also include a provision requiring that existing wetland and habitat mitigation banks be given preference for use in establishing compensatory mitigation if the highway project impacts occur within the bank's service area (Sections 1106(b) and 1108(a) of TEA–21; 23 U.S.C. 103(b)(6)(M) and 133(b)(11). In this SNPRM, the FHWA would revise the current proposed regulation to conform to the authority of TEA–21.

In addition to making changes to conform with TEA–21, this proposal would broaden the scope of the current regulation to encompass all mitigation projects for impacts to wetlands and natural habitats eligible for Federal participation, not just those involving privately owned wetlands. This SNPRM also applies to projects under the Federal Lands Highway Program, as described in § 777.1, Purpose.

With all this in mind, the FHWA has decided to issue this SNPRM, which would further amend part 777. At each place where the term ''wetlands'' occurs in the regulatory text, this SNPRM proposes to add either the words ''natural habitat'' or ''habitat.'' In addition, § 777.2, Definitions, would be amended to add a definition of the term ''natural habitat.'' Where negative impacts are unavoidable, the Department of Transportation's Fiscal Year 1999 and 2000 Performance Plans establish an objective to minimize the adverse impacts of projects on wetlands and to achieve a net gain of wetlands in the Federal-aid and Federal Lands Highway Programs. Thus, a new definition for ''net gain of wetlands'' would be added to § 777.2.

Section 777.9, Mitigation of Impacts, would be amended by adding a preference for existing wetlands banks or natural habitat banks to the provision authorizing the expenditure of Federal-aid highway funds for wetlands and natural habitat mitigation banking and related measures.

Finally, the title of part 777 would be changed to read, ''Mitigation of Impacts to Wetlands and Natural Habitat.'' The FHWA invites comments on this new proposal.

Rulemaking Analyses and Notices

All comments received before the close of business on the comment closing date indicated above will be considered and will be available for examination in the docket at the above address. Comments received after the comment closing date will be filed in the docket and will be considered to the extent practicable, but the FHWA may issue a final rule at any time after the close of the comment period. In addition to late comments, the FHWA will also continue to file in the docket relevant information that becomes available after the comment closing date, and interested persons should continue to examine the docket for new material.

Executive Order 12866 (Regulatory Planning and Review and DOT Regulatory Policies and Procedures)

The FHWA has considered the impact of this document and has determined that it is neither a significant rulemaking action within the meaning of Executive Order 12866 nor a significant rulemaking under the regulatory policies and procedures of the Department of Transportation. This rulemaking would supplement the FHWA's NPRM proposing to amend its regulations regarding mitigation of impacts to privately owned wetlands, which have become outdated because of provisions in Sections 1006 and 1007 of the ISTEA authorizing greater flexibility for Federal participation in mitigating impacts to wetlands. These amendments have been codified at 23 U.S.C. 103 and 133. The recently enacted TEA–21 added the term ''natural habitat'' to the eligibility provisions of 23 U.S.C. 103 and 133, and added a preference for the use of established mitigation banks for wetland mitigation activities. This SNPRM would amend the NPRM to address these new provisions.

This SNPRM would not cause any significant changes to the amount of funding available to the States under the STP or NHS programs or add to the process by which States receive funding. The provisions of this proposed rulemaking would not require the additional expenditure of Federal-aid or State highway funds. Instead, this SNPRM would merely clarify the scope of the FHWA's wetlands regulations by specifying that they apply to all projects

funded pursuant to title 23, U.S.C. Thus, it is anticipated that the economic impact of this rulemaking would be minimal. In addition, it would not create a serious inconsistency with any other agency's action or materially alter the budgetary impact of any entitlements, grants, user fees, or loan programs; nor will amendment of this regulation raise any novel legal or policy issues. Therefore, a full regulatory evaluation is not required.

Regulatory Flexibility Act

In compliance with the Regulatory Flexibility Act (5 U.S.C. 601–612), the FHWA has evaluated the effects of this SNPRM on small entities and has determined it would not have a significant economic impact on a substantial number of small entities. Supplementing the FHWA's June 17, 1996, NPRM and June 18, 1997, SNPRM in this manner would not affect the amount of funding available to the States through the STP or NHS programs, or the procedures used to select the States eligible to receive these funds. Furthermore, States are not included in the definition of ''small entity'' set forth in 5 U.S.C. 601. For these reasons, and for those set forth in the analysis of E.O. 12866, the FHWA hereby certifies that this action will not have a significant economic impact on a substantial number of small entities.

Unfunded Mandates Reform Act of 1995

This proposed rule would not impose a Federal mandate resulting in the expenditure by State, local, and tribal governments, in the aggregate, or by the private sector, of $100 million or more in any one year (2 U.S.C. 1532).

Executive Order 12612 (Federalism Assessment)

This action has been analyzed in accordance with the principles and criteria contained in Executive Order 12612, and it has been determined that this action does not raise sufficient federalism implications to warrant the preparation of a federalism assessment. This SNPRM would not preempt any State law or State regulation. No additional costs or burdens would be imposed on the States as a result of this action, and the States' ability to discharge traditional State governmental functions would not be affected by this rulemaking.

Executive Order 12372

Catalog of Domestic Assistance Program Number 20.205, Highway Planning and Construction. The regulations implementing Executive Order 12372 regarding intergovernmental consultation on Federal programs and activities apply to this program.

Paperwork Reduction Act

This action does not create a collection of information requirement for the purposes of the Paperwork Reduction Act of 1995, 44 U.S.C. 3501–3520.

National Environmental Policy Act

The FHWA has analyzed this rulemaking for the purposes of the National Environmental Policy Act of 1969 (NEPA) (42 U.S.C. 4321–4347). This SNPRM would not, in and of itself, constitute a major Federal action significantly affecting the quality of the human environment. Instead, it would clarify the scope of the June 17, 1996, NPRM, which was intended to increase the flexibility available to States when deciding how to mitigate impacts to wetlands resulting from projects funded pursuant to the provisions of title 23, U.S.C. The passage of TEA–21, with its addition of the term ''natural habitat'' to the wetlands mitigation banking provisions of title 23, U.S.C., made this SNPRM necessary. Such impacts to wetlands and natural habitat and appropriate mitigation measures would be evaluated pursuant to NEPA on a project-by-project basis by the States and the FHWA. Accordingly, promulgation of this SNPRM would not require the preparation of an environmental impact statement.

Regulatory Identification Number

A regulation identification number (RIN) is assigned to each regulatory action listed in the Unified Agenda of Federal Regulations. The Regulatory Information Service Center publishes the Unified Agenda in April and October of each year. The RIN contained in the heading of this document can be used to cross reference this action with the Unified Agenda.

List of Subjects in 23 CFR Part 777

Flood plains, Grant programs—transportation, Highways and roads, Natural habitat, Wetlands.

Issued on: March 31, 1999.

Kenneth R. Wykle,

Federal Highway Administrator.

In consideration of the foregoing, the FHWA proposes to revise 23 CFR part 777, as set forth below:

1. Part 777 is revised to read as follows:

PART 777—MITIGATION OF IMPACTS TO WETLANDS AND NATURAL HABITAT

Sec.
777.1 Purpose.
777.2 Definitions.
777.3 Background.
777.5 Federal participation.
777.7 Evaluation of impacts.
777.9 Mitigation of impacts.
777.11 Other considerations.

Authority: 42 U.S.C. 4321 *et seq.*; 49 U.S.C. 303; 23 U.S.C. 101(a), 103, 109(h), 133(b)(1), 133(b)(11), 133(d)(2), 138, 315; E.O. 11990; DOT Order 5660.1A; 49 CFR 1.48(b).

§ 777.1 Purpose.

To provide policy and procedures for the evaluation and mitigation of adverse environmental impacts to wetlands and natural habitat resulting from Federal-aid projects funded pursuant to provisions of title 23, U.S.C. These policies and procedures shall be applied by the Federal Highway Administration (FHWA) to projects under the Federal Lands Highway Program to the extent such application is deemed appropriate by the FHWA.

§ 777.2 Definitions.

In addition to those contained in 23 U.S.C. 101(a), the following definitions shall apply as used in this regulation:

Biogeochemical transformations. Those changes in chemical compounds and substances which naturally occur in ecosystems. Examples are the carbon, nitrogen, and phosphorus cycles in nature, in which these elements are incorporated from inorganic substances into organic matter and recycled on a continuing basis.

Compensatory mitigation. Activities such as restoration, enhancement, creation, and under exceptional circumstances, preservation, of wetlands, wetland buffer areas, and natural habitats, carried out to replace or compensate for the loss of wetlands or natural habitat area or functional capacity resulting from Federal-aid projects funded pursuant to provisions of title 23, U.S.C. Compensatory mitigation usually occurs in advance of or concurrent with the impacts to be mitigated, but may occur after such impacts in special circumstances.

Ecologically desirable. A state or condition desired or wanted as the result of a mitigation agreement that provides additional wetland or natural habitat area or functional capacity.

Natural habitat. A complex of natural, primarily native or indigenous vegetation, not subject to cultivation or current artificial landscaping, a primary purpose of which is to provide habitat for wildlife, either terrestrial or aquatic.

For purposes of this regulation, *habitat* has the same meaning as *natural habitat*.

Net gain of wetlands. When project impacts are unavoidable, a wetland resource conservation and management principle under which, over the long term, losses of wetlands area of functional capacity due to highway projects are offset by gains at a ratio greater than 1:1, through restoration, enhancement, preservation, or creation of wetlands or associated areas critical to the protection or conservation of wetlands functions. This definition specifically excludes natural habitat, as defined in this section, other than wetlands.

On-site, in-kind mitigation. Compensatory mitigation which replaces wetlands or natural habitat area or functions lost as a result of a highway project with the same or like wetland or habitat type and functions adjacent or contiguous to the site of the impacts.

Service area of a mitigation bank. The service area of a wetland or natural habitat mitigation bank shall be consistent with that in the Federal Guidance for the Establishment, Use and Operation of Mitigation Banks,[1] i.e., the designated area (e.g., watershed, county) wherein a bank can be expected to provide appropriate compensation for impacts to wetlands and/or other aquatic or natural habitat resources.

Wetland or habitat enhancement. Increasing the capacity of an altered or degraded site to perform specific functions by modifying the site conditions in or around the wetland or natural habitat. Examples include, but are not limited to, alteration of hydrologic regime, vegetation management, erosion control, fencing, pest control, and fertilization.

Wetland or habitat establishment period. An agreed-upon period of time required to establish wetland functional capacity in a compensatory mitigation project sufficient to compensate wetlands or habitat losses due to impacts of Federal-aid highway projects. The establishment period may vary depending on the specific wetland or habitat type being developed.

Wetland or habitat functional capacity. The ability of a wetland or natural habitat to perform natural functions, such as provide wildlife habitat, support biodiversity, store surface water, or perform biogeochemical transformations, as determined by scientific functional assessment. Natural functions of wetlands include, but are not limited to, those listed by the U.S. Army Corps of Engineers at 33 CFR 320.4(b)(2)(I) through (viii).

Wetland or habitat restoration. Reestablishment of wetlands or natural habitats on a site where they formerly existed but essentially have been eliminated.

Wetland or wetlands. The terms wetland and wetlands have the same meaning as the definition issued by the U.S. Army Corps of Engineers (33 CFR 328.3(b)) and the U.S. Environmental Protection Agency (40 CFR 230.3).

Wetlands and habitat banking and related measures. Efforts, or contributions to efforts, to restore, create, enhance, or, in exceptional circumstances, preserve wetlands, natural habitats, or functional capacity of these areas , usually undertaken in advance and outside the area of direct impacts of proposed Federal-aid highway projects and intended expressly to compensate for unavoidable wetlands or habitat losses caused by such projects, when compensation could not be achieved or would not be as environmentally beneficial if located at individual project impact sites.

Wetlands or habitat mitigation credit. A unit of wetlands or habitat mitigation, defined either by:

(1) Area or

(2) A measure of functional capacity through application of scientific functional assessment.

§ 777.3 Background.

(a) Executive Order 11990, Protection of Wetlands, and DOT Order 5660.1A, Preservation of the Nation's Wetlands, emphasize the important functions and values inherent in the Nation's wetlands.

(b) Federal agencies are directed to avoid new construction in wetlands unless the head of the agency determines that:

(1) There is no practicable alternative to such construction, and

(2) The proposed action includes all practicable measures to minimize harm to wetlands which may result from such use.

(c) Sections 103 and 133 of title 23, U.S.C., identify additional approaches for mitigation and management of impacts to wetlands and natural habitats which result from projects funded pursuant to title 23, U.S.C., as eligible for participation with Federal-aid highway funds.

§ 777.5 Federal participation.

(a) Those measures which the FHWA and a State DOT find appropriate and necessary to mitigate adverse environmental impacts to wetlands and natural habitats are eligible for Federal participation where the impacts are the result of projects funded pursuant to title 23, U.S.C. The justification for the cost of proposed mitigation measures should be considered in the same context as any other public expenditure; that is, the proposed mitigation represents a reasonable public expenditure when weighed against other social, economic, and environmental values, and the benefit realized is commensurate with the proposed expenditure. Mitigation measures shall give like consideration to traffic needs, safety, durability, and economy of maintenance of the highway.

(b) It is FHWA policy to permit, consistent with the limits set forth in this part, the expenditure of title 23, U.S.C., funds for activities required for the planning, design, construction, and establishment of wetlands and natural habitat mitigation projects, and acquisition of land or interests therein.

§ 777.7 Evaluation of impacts.

(a) The reasonableness of the public expenditure should be directly related to:

(1) The importance of the impacted wetlands and natural habitats, and

(2) The extent of highway impacts on the wetlands and natural habitats, as determined through an appropriate, interdisciplinary, impact assessment.

(b) Evaluation of the importance of the impacted wetlands and natural habitats should consider:

(1) The wetlands' and natural habitat functional capacity;

(2) Input from the appropriate resource management agencies through interagency coordination;

(3) The relative importance of these functions to the total wetland or natural habitat resource of the area; and

(4) Other factors such as uniqueness, esthetics, or cultural values.

(c) A determination of the highway impact should focus on both the short- and long-term effects of the project on wetland or natural habitat functional capacity, consistent with 40 CFR 1502.16.

§ 777.9 Mitigation of impacts.

(a) *Actions eligible for Federal funding.* There are a number of actions that can be taken to minimize the impact of highway projects on wetlands or natural habitats. The following actions qualify for Federal-aid highway funding:

(1) Where practicable, avoidance or minimization of impacts to wetlands or

[1] This document is available from FHWA Headquarters, Resource Centers, and individual State Division Offices for inspection and copying as prescribed at 49 CFR Part 7.

natural habitats through realignment and special design or construction features. In accordance with the Environmental Protection Agency's Clean Water Act Section 404(b)(1) guidelines (40 CFR part 230 *et seq.*), avoidance and then minimization must be given first consideration in mitigating wetlands impacts. These guidelines apply only to impacts to wetlands regulated under Section 404 of the Clean Water Act.

(2) After practicable avoidance and minimization measures have been exhausted, other ecologically desirable compensatory mitigation alternatives, either inside or outside of the right-of-way. These may include such measures as on-site mitigation, when that alternative is determined to be ecologically desirable and practicable; improvement of existing degraded or historic wetlands or natural habitats through restoration or enhancement on or off site; creation of new wetlands from non-wetland areas off-site; and under exceptional circumstances, preservation of existing wetlands or natural habitats on or off site. Restoration of wetlands is generally preferable to enhancement or creation of new wetlands from non-wetland areas.

(3) Improvements to existing wetlands or natural habitats. Such activities may include, but are not limited to, construction or modification of water level control structures or ditches, establishment of natural vegetation, recontouring of the site, installation or removal of irrigation or water distribution systems, pest control, installation of fencing, site monitoring, and other measures to protect, enhance, or restore the wetland or natural habitat character of the site.

(4) Wetlands mitigation banking and related measures. With respect to participation in a natural habitat or wetland mitigation effort related to a project funded under this title that has an impact that occurs within the service area of a mitigation bank, preference shall be given, to the maximum extent practicable, to the use of the mitigation bank if the bank contains sufficient available credits to offset the impact and the bank is approved in accordance with the Federal Guidance for the Establishment, Use and Operation of Mitigation Banks [2] or other applicable Federal law (including regulations).

(b) *Participation in wetlands or natural habitat mitigation banks.* If the development or acquisition of mitigation credits in wetland or natural habitat mitigation banks, either on or off-site, is determined to be the most ecologically desirable and practicable alternative for compensatory mitigation, banking alternatives eligible for participation with Federal-aid funds include such measures as the following:

(1) Multi-user wetlands or natural habitat banks established on publicly owned or controlled lands;

(2) Single purpose publicly owned banks, established by and for the use of a State DOT with Federal-aid participation; or multipurpose publicly owned banks, established with public, non-Federal-aid funds, in which credits may be purchased by highway agencies using Federal-aid funds on a per-credit basis; or

(3) Other forms of mitigation banks in which mitigation credits are purchased by State DOTs to mitigate wetlands or habitat impacts due to projects funded under title 23, U.S.C., including privately owned banks or those established with private funds to mitigate wetland or natural habitat losses which have been approved and/or permitted by the appropriate regulatory agency.

(c) *Contributions to statewide and regional efforts to conserve, restore, enhance and create wetlands or natural habitats.* Federal-aid funds may participate in the development of statewide and regional wetlands conservation plans, including any efforts and plans authorized pursuant to the Water Resources Development Act of 1990 (Pub. L. 101–640). Contributions to these efforts may occur in advance of project construction only if such efforts are consistent with all applicable requirements of Federal law and regulations and State transportation planning processes.

§ 777.11 Other considerations.

(a) The development of measures proposed to mitigate impacts to wetlands or natural habitats should include consultation with appropriate State and Federal agencies.

(b) Federal-aid funds may not participate in the replacement of wetlands or natural habitats absent sufficient assurances that the area will be maintained in the intended state as a wetland or natural habitat.

(c) The acquisition of proprietary interests in replacement wetlands or natural habitats as a mitigation measure may be in fee simple or by easement, as appropriate. The acquisition of ''mitigation credits'' in wetland or natural habitat mitigation banks should be accomplished through a legally recognized instrument, such as permanent easement or deed restriction, which provides for protection and permanent continuation of the wetland or natural habitat nature of the mitigation.

(d) A State DOT may acquire privately owned lands in cooperation with another public agency or third party. Such an arrangement may accomplish greater benefits than would otherwise be accomplished by the individual agency acting alone.

(e) A State DOT may transfer the title to, or enter into an agreement with, an appropriate public natural resource management agency to manage lands acquired outside the right of way without requiring a credit to Federal funds. Any such transfer of title or agreement shall require the continued use of the lands for the purpose for which they were acquired. In the event the purpose is no longer served, the lands and interests therein shall immediately revert to the State DOT for proper disposition.

(f) The reasonable costs of acquiring lands or interests therein to provide replacement lands with equivalent wetlands or natural habitat area or functional capacity associated with these areas are eligible for Federal participation.

(g) The objective in mitigating impacts to wetlands in the Federal-aid highway program is to implement the policy of a net gain of wetlands on a program wide basis, when project impacts are unavoidable.

(h) Certain activities to ensure the viability of compensatory mitigation wetlands or natural habitats during the period of establishment are eligible for Federal-aid participation. These include, but are not limited to, such activities as repair or adjustment of water control structures, pest control, irrigation, fencing modifications, replacement of plantings, and mitigation site monitoring. The establishment period should be specifically determined by the mitigation agreement among the mitigation planners prior to beginning any compensatory mitigation activities.

[FR Doc. 99–8444 Filed 4–6–99; 8:45 am]

BILLING CODE 4910–22–P

[2] See footnote 1.

ENVIRONMENTAL PROTECTION AGENCY

40 CFR Parts 180, 185 and 186

[OPP–300841; FRL–6075–1]

RIN 2070–AB78

Tolerance Revocations for Certain Pesticides

AGENCY: Environmental Protection Agency (EPA).

ACTION: Proposed rule.

SUMMARY: This document announces the proposed revocation of tolerances listed in the regulatory text for the herbicides dalapon, fluchloralin, metobromuron, paraquat, and sesone; the fungicides zinc sulfate, glyodin, and manganous dimethyldithiocarbamate (manam); the insecticides coumaphos, hydrogen cyanide and *0*-Ethyl *S*-phenyl ethylphosphonodithioate (fonofos); the plant growth regulator *N,N*-dimethylpiperidinium chloride (mepiquat chloride); and the food additive ethyl formate. Also, this notice proposes to revoke the tolerance for residues of the nematocide and insecticide ethoprop in or on mushrooms and soybeans; soybeans, forage; and soybeans, hay; and the food additive tolerance for residues of the fungicide paraformaldehyde in maple syrup. EPA expects to determine whether any individuals or groups want to support these tolerances. The regulatory actions in this notice are part of the Agency's reregistration program under the Federal Insecticide, Fungicide, and Rodenticide Act (FIFRA), and the tolerance reassessment requirements of the Federal Food, Drug, and Cosmetic Act (FFDCA). By law, EPA is required to reassess 33% of the tolerances that were in existence on August 2, 1996, by August 1999, or about 3,200 tolerances. The regulatory actions proposed in this document pertain to the proposed revocation of 206 tolerances and/or exemptions, which would be counted among reassessments made toward the August 1999 review deadline of FFDCA section 408(q), as amended by the Food Quality Protection Act (FQPA) of 1996.

DATES: Comments must be received on or before June 7, 1999.

ADDRESSES: Comments may be submitted by mail, electronically, or in person. Please follow the detailed instructions for each method as provided in Unit IV of the SUPPLEMENTARY INFORMATION section of this notice. Be sure to identify the appropriate docket number [OPP–300841].

FOR FURTHER INFORMATION CONTACT:

Amy Caicedo, Special Review Branch (7508C), Special Review and Reregistration Division, Office of Pesticide Programs, U.S. Environmental Protection Agency, 401 M St., SW., Washington, DC 20460. Office location, telephone number and e-mail address: Special Review Branch, Crystal Mall 2, 6th floor, 1921 Jefferson Davis Highway, Arlington, Virginia, Telephone: (703) 308–9399; e-mail: caicedo.amy@epa.gov.

SUPPLEMENTARY INFORMATION:

I. What is the Contribution to Tolerance Reassessment?

By law, EPA is required to reassess 33% of the tolerances that were in existence on August 2, 1996, by August 1999, or about 3,200 tolerances. As of March 1999, EPA has reassessed over 2,400 tolerances. The regulatory actions proposed in this document pertain to the proposed revocation of 206 tolerances and/or exemptions, which would be counted among reassessments made toward the August 1999 review deadline of FFDCA section 408(q), as amended by the Food Quality Protection Act (FQPA) of 1996.

II. Does this Proposed Rule Apply to Me?

You may be affected by this proposed rule if you sell, distribute, manufacture, or use pesticides for agricultural applications, process food, distribute or sell food, or implement governmental pesticide regulations. Pesticide reregistration and other actions [see FIFRA section 4(g)(2)] include tolerance and exemption reassessment under FFDCA section 408. Potentially affected categories and entities may include, but are not limited to:

Category	Examples of Potentially Affected Entities
Agricultural Stakeholders.	Growers/Agricultural Workers Contractors [Certified/Commercial Applicators, Handlers, Advisors, etc.] Commercial Processors Pesticide Manufacturers User Groups Food Consumers
Food Distributors	Wholesale Contractors Retail Vendors Commercial Traders/Importers
Intergovernmental Stakeholders.	State, Local, and/or Tribal Government Agencies
Foreign Entities	Governments, Growers, Trade Groups

This table is not intended to be exhaustive, but rather provides a guide for readers regarding entities likely to be affected by this action. Other types of entities not listed in this table could also be affected. If you have any questions regarding the applicability of this action to a particular entity, you can consult with the technical person listed in the ''FOR FURTHER INFORMATION CONTACT'' section.

III. How can I get additional information or copies of this or other support documents?

A. Electronically

You may obtain electronic copies of this document and various support documents from the EPA Internet Home Page at http://www.epa.gov/. On the Home Page select ''Laws and Regulations'' and then look up the entry for this document under ''**Federal Register**- Environmental Documents.'' You can also go directly to the ''**Federal Register**'' listings at http://www.epa.gov/homepage/fedrgstr/.

B. In Person or by Phone

If you have any questions or need additional information about this action, please contact the technical person identified in the ''FOR FURTHER INFORMATION CONTACT'' section. In addition, the official record for this notice, including the public version, has been established under docket control number [OPP–300841], including comments and data submitted electronically as described below. A public version of this record (including printed paper versions of any electronic comments) which does not include any information claimed as Confidential Business Information (CBI), is available for inspection in room 119, Crystal Mall #2, 1921 Jefferson Davis Hwy., Arlington Virginia, from 8:30 a.m. to 4 p.m., Monday through Friday, excluding legal holidays. The Public Information and Records Integrity Branch telephone number is 703–305–5805.

IV. How Can I Respond to this Notice?

A. How and to Whom Do I Submit Comments To?

You may submit comments through the mail, in person, or electronically. Be sure to identify the appropriate docket number (i.e., [OPP–300841]) in your correspondence.

1. *By mail.* Submit written comments, identified by the docket control number [OPP–300841], to: Public Information and Records Integrity Branch, Information Resources and Services Division (7502C), Office of Pesticide Programs, U.S. Environmental Protection Agency, 401 M St., SW., Washington, DC 20460.

2. *In person or by courier.* Deliver written comments, identified by the docket control number [OPP–300841], to: Public Information and Records Integrity Branch, Office of Pesticide Programs, U.S. Environmental Protection Agency, Rm. 119, Crystal Mall #2, 1921 Jefferson Davis Hwy., Arlington, VA.

3. *Electronically.* Submit your comments and/or data electronically by email to: oppt.ncic@epa.gov. Do not submit any information electronically that you consider to be CBI. Submit electronic comments in ASCII file format avoiding the use of special characters and any form of encryption. Comment and data will also be accepted on standard computer disks in WordPerfect 5.1/6.1 or ASCII file format. All comments and data in electronic form must be identified by the appropriate docket control number [OPP–300841]. You may also file electronic comments and data online at many Federal Depository Libraries.

B. How Should I Handle CBI Information in My Comments?

You may claim information that you submit in response to this document as CBI by marking any part or all of that information as CBI. Information so marked will not be disclosed except in accordance with procedures set forth in 40 CFR part 2. A copy of the comment that does not contain CBI must be submitted for inclusion in the public record. Information not marked confidential will be included in the public docket by EPA without prior notice. If you have any questions about CBI or the procedures for claiming CBI, please consult with the technical person identified in the ''FOR FURTHER INFORMATION CONTACT'' section.

V. What Is a ''Tolerance''?

A ''tolerance'' represents the legally allowed maximum level for residues of pesticide chemicals in or on raw agricultural commodities and processed foods. Section 408 of FFDCA, 21 U.S.C. 301 et seq., as amended by the FQPA of 1996, Pub. L. 104–170, authorizes the establishment of tolerances (maximum residue levels), exemptions from the requirement of a tolerance, modifications in tolerances, and revocation of tolerances for residues of pesticide chemicals in or on raw agricultural commodities and processed foods (21 U.S.C. 346(a)). Without a tolerance or exemption, food containing pesticide residues is considered to be unsafe and therefore ''adulterated'' under section 402(a) of the FFDCA. If food containing pesticide residues is considered to be ''adulterated,'' you can not distribute the product in interstate commerce (21 U.S.C. 331(a) and 342(a)). For a food-use pesticide to be sold and distributed, the pesticide must not only have appropriate tolerances under the FFDCA, but also must be registered under section 3 of FIFRA (7 U.S.C. et seq.). To retain these tolerances and exemptions, EPA must make a finding that the tolerances and exemptions are safe. To make this safety finding, EPA needs data and information indicating that there is a reasonable certainty that no harm will result from aggregate exposure to the pesticide residues covered by the tolerances and exemptions.

Monitoring and enforcement of pesticide tolerances and exemptions are carried out by the U.S. Food and Drug Administration (FDA) and the U.S. Department of Agriculture (USDA). This includes monitoring for pesticide residues in or on commodities imported into the United States.

VI. Why Is EPA Proposing the Tolerance Actions Discussed below?

EPA is proposing a number of these tolerance actions to implement the tolerance recommendations made during the Reregistration Eligibility Decision (RED) process, and as follow-up on canceled pesticides and uses of pesticides. As part of the RED process, EPA is required to determine whether each of the amended tolerances meets the safety standards under the Food Quality Protection Act (FQPA). The safety finding determination is found in detail in each RED for the active ingredient. REDs propose certain tolerance actions to be implemented to meet safety findings and change commodity names and groupings in accordance with new EPA policy. Printed copies of the REDs may be obtained from EPA's National Center for Environmental Publications and Information (EPA/NCEPI), P.O. Box 42419, Cincinnati, OH 45242–2419, telephone 1–800–490–9198; fax 513–489–8695 and from the National Technical Information Service (NTIS), 5285 Port Royal Road, Springfield, VA 22161, telephone 703–487–4650. Electronic copies of the RED are available on the internet at http://www.epa.gov/REDs.

Of the chemicals in this **Federal Register** Notice, REDs have been issued for Paraquat, Coumaphos, and Mepiquat chloride. The REDs for Paraquat and Mepiquat chloride were issued after passage of FQPA so they contain the Agency's evaluation of the database for these pesticides, including requirements for additional data on the active ingredients to confirm the potential human health and environmental risk assessments associated with current product uses as well as the Agency's decisions and conditions under which these uses and products will be eligible for registration. A determination of safety by EPA includes consideration of (a) potential cumulative effects with pesticides that have a common mode of toxicity, (b) aggregate risks resulting from exposure to residues in food and drinking water and exposure occurring due to pesticide application in residential settings, and (c) special sensitivity to children. FFDCA section 408(b)(2)(C) requires that when determining appropriate tolerances, EPA apply an additional ten-fold safety factor for infants and children to take into account potential pre- and post-natal toxicity and the completeness of data on toxicity and exposure unless a different margin of safety, on the basis of reliable data, will be safe for infants and children. Retention, reduction, or removal of the ten-fold safety factor is based on a weight of evidence evaluation of all applicable data. This **Federal Register** proposal for Paraquat and Mepiquat chloride only includes the tolerances proposed for revocation. At a later date, EPA will issue a **Federal Register** proposal for the other tolerance reassessments in the Paraquat and Mepiquat chloride REDs. An FQPA assessment still remains to be done for Coumaphos since this RED was completed before passage of FQPA.

In addition to implementing the tolerance recommendations found in RED documents, this **Federal Register** notice proposes revocation for canceled uses of certain pesticides. Registrations for Dalapon, Ethyl Formate, Fluchloralin, Fonofos, Glyodin, Hydrogen Cyanide, Manam, Metobromuron, Sesone, and Basic Zinc Sulfate were voluntarily canceled by their respective registrants. It is EPA's general practice to propose revocation of tolerances for residues of pesticide active ingredients for which FIFRA registrations no longer exist. EPA has historically expressed a concern that retention of tolerances that are not necessary to cover residues in or on legally treated foods has the potential to encourage misuse of pesticides within the United States. However, in accordance with FFDCA section 408, EPA will not revoke any tolerance or exemption proposed for revocation if any person demonstrates a need for the retention of the tolerance, and if retention of the tolerance will meet the tolerance standard established under FQPA. Generally, interested parties support the retention of such tolerances in order to permit treated commodities to be legally imported into the United States, since raw agricultural commodities or processed food or feed commodities containing pesticide residues not covered by a tolerance or exemption are considered to be adulterated.

For tolerances without U.S. registrations, EPA requires the same

toxicology and residue chemistry data requirements as are needed to support U.S. food-use registrations. For import tolerances, EPA applies these data requirements on a case-by-case basis to account for specific growing conditions in foreign countries. (See 40 CFR part 158 for EPA's data requirements to support domestic use of a pesticide and the establishment and maintenance of a tolerance. EPA is developing a guidance document concerning data requirements for import tolerance support. This guidance will be made available to interested persons). In most cases, EPA requires residue chemistry data (crop field trials) that are representative of growing conditions in exporting countries in the same manner that EPA requires representative residue chemistry data from different U.S. regions to support domestic use of a pesticide and any resulting tolerance(s) or exemption(s). Good Laboratory Practice (GLP) requirements for studies submitted in support of tolerances and exemptions for import purposes only are the same as for domestic purposes; i.e., the studies are required to either fully meet GLP standards, or have sufficient justification presented to show that deviations from GLP requirements do not significantly affect the results of the studies.

VII. Which Pesticides Are Covered by this Action?

The following pesticides are covered by this proposed rule:

1. Basic zinc sulfate is a fungicide used to control blight, brown rot, leaf spot, and scab. It was manufactured by FMC Corp. Agricultural Products Group, Griffin Corp., Marzone Inc., Puregro Co., Solaris Group of The Monsanto Co., Sureco Inc., Tifchem Products Inc., and W.R. Grace and Company.

2. Coumaphos [*O*,*O*-Diethyl *O*-(3-chloro-4-methyl-2-oxo-2*H*-1-benzopyran-7-yl) phosphorothioate], trade names CO-Ral, Baymix, Bay 21/199, Muscatox, Asuntol, Ent–17957, Resitox, is an organophosphate insecticide used for control of a wide variety of livestock insects, including cattle grubs, screw worms, lice, scabies, flies, and ticks. It is used against ectoparasites, which are insects that live on the outside of host animals such as sheep, goats, horses, pigs, and poultry. It is added to cattle and poultry feed to control the development of fly larvae that breed in manure. It is manufactured by Bayer Corporation.

3. Dalapon (2,2-dichloropropionic acid, trade names Dalapon 85 and GX Dalapon) is an herbicide used to control Bermuda grass, oxtails, Johnson grass, quackgrass, and other perennial and annual grasses, as well as cattails and rushes. It was manufactured by Aceto Agriculture Chemicals Corp. and by Garden Exchange Ltd.

4. Ethoprop (*O*-ethyl *S*,*S*-dipropyl phosphorodithioate, trade name Mocap) is a nematocide and insecticide used to control aphids, beetles, billbugs, grubs, nematodes, rootworms, weevils, and wireworms. It is manufactured by Rhone-Poulenc AG Company.

5. Ethyl formate is a food additive used to control the flour beetle, Indian meal moth, and raisin moth. It was manufactured by Coast Laboratories and by International Minerals and Chemical Corporation.

6. Fluchloralin (*N*-(2-chloroethyl)-1-*a*,*a*,*a*-trifluoro-2,6-dinitro-*N*-propyl-*p*-toluidine, trade name Basalin) is a selective herbicide used to control broadleaf weeds, crabgrass, oxtails, goosegrass, Johnson grass, and pigweed. It was manufactured by BASF Corporation.

7. *O*-Ethyl *S*-phenyl ethylphosphonodithioate (Fonofos, trade names Dyfonate, N–2790, Ent–25,796, Stauffer N–2790) is a soil applied organophosphate insecticide. It was manufactured by Zeneca Ag Products.

8. Glyodin (2-heptadecyl-2-imidazoline acetate or 2-heptadecyl-2-imidazoline (base)) is a fungicide used to control black rot, black spot, brown rot, leaf spot, powdery mildew, scab, and sooty blotch. It was manufactured by Agway Inc., Grower Service Corp., and Union Carbide Corporation.

9. Hydrogen cyanide is an insecticide and rodenticide fumigant used to control beetles, cockroaches, mealworms, mice, moths, rats, and weevils. It was manufactured by Degesch America, Inc. and by Fumico Incorporated.

10. Manganous dimethyldithiocarbamate (manam, trade names Fundex, Tricarbamix, and Niagara niacide) is a fungicide used to control leaf spot, rust and scab. It was manufactured by Aceto Agriculture Chemicals Corp., ELF Atochem North America Inc., and FMC Corp. Agricultural Products Group.

11. Metobromuron (*N′*-(4-bromophenyl)-*N*-methoxy-*N*-methylurea) is a selective herbicide used to control barnyard grass, carpetweed, chickweed, crabgrass, goose grass, pigweed, and ragweed. It was manufactured by Aceto Agriculture Chemicals Corporation.

12. *N*,*N*-dimethylpiperidinium chloride (mepiquat chloride, trade name Pix) is a plant growth regulator. It is manufactured by BASF Corporation.

13. Paraformaldehyde (trade names Flomor, Ma-pel, Sapflo) is a fungicide and bacteriocide used to control pathogenic fungi, pathogenic bacteria, and mold/mildew. It is manufactured by Lamb Natural Flow, Inc., Sugar Bush Supply Co., and Reynolds Sugar Bush Incorporated.

14. Paraquat (trade names Cyclone, Gramoxone, and Surefire) is a herbicide used to control a broad spectrum of emerged weeds. It is manufactured by Zeneca Ag Products.

15. Sesone (sodium 2,4-dichlorophenoxyethyl sulfate) is a herbicide used to control barnyard grass, carpetweed, chickweed, crabgrass, foxtail, and pigweed. It was manufactured by Landia Chemical Co. and by Tifchem Products Incorporated.

VIII. What Action Is Being Taken?

This notice proposes revocation of all FFDCA tolerances for residues of the herbicides dalapon, 40 CFR 180.150, 185.1500, and 186.1500; fluchloralin, § 180.363; metobromuron § 180.250; and sesone, § 180.102; the fungicides basic zinc sulfate, § 180.244; glyodin, § 180.124; and manganous dimethyldithiocarbamate, § 180.161; the insecticides fonofos, § 180.221; and hydrogen cyanide, § 180.130; and the food additive ethyl formate, § 180.520; because no registered uses exist. The registrations for these pesticide chemicals were canceled because the registrant failed to pay the required maintenance fee and/or the registrant voluntarily canceled all registered uses of the pesticide.

For the following pesticides, certain tolerances for specific commodities are proposed to be removed.

1. *Ethoprop*. The following tolerances for residues in 40 CFR 180.262(a) on mushrooms; soybeans; soybeans, forage; and soybeans, hay are being proposed for revocation for Ethoprop because uses no longer exist for mushrooms, and the registrant voluntarily canceled the soybean uses.

2. *Paraformaldehyde*. The paraformaldehyde tolerance in 40 CFR 185.4650 for residues in maple syrup is being proposed for revocation because the use was voluntarily canceled by the registrant.

3. *Coumaphos*. The tolerances in 40 CFR 180.189 for residues of coumaphos for residues on eggs; poultry, fat; poultry, meat byproducts(mbyp); and poultry, meat are being proposed for revocation because these uses were voluntarily canceled by the registrant.

4. *N,N-dimethylpiperidinium chloride*. This notice also proposes revocation of FFDCA tolerances in 40 CFR 180.384 for residues of the plant

growth regulator *N,N*-dimethylpiperidinium chloride (mepiquat chloride) in or on cotton, forage because it is no longer considered a significant livestock feed item. Tolerances on eggs; milk; poultry, fat; poultry, mbyp; poultry, meat are being proposed for revocation because there is no reasonable expectation of finite residues and therefore a tolerance is unnecessary (40 CFR 180.6(b)). The tolerance for cottonseed meal is being revoked because it will be covered within the reassessed raw agricultural commodities tolerance.

5. *Paraquat.* EPA proposes to revoke the tolerances for rye grain and oat grain in 40 CFR 180.205(a) because no registered uses exist. The Agency proposes to revoke the tolerances for poultry, fat; meat; and poultry, mbyp in 40 CFR 180.205(a) because data indicate that no residues are expected. The statement of policy is given in 40 CFR 180.6(a)(3). In such cases, the Agency proposes to revoke the existing tolerances because they are unnecessary. Also, the Agency proposes to revoke the tolerances for bean straw; hops, fresh; hop vines; lentil, hay; peanut, vines; and sunflower, seed hulls in 40 CFR 180.205(a) because they are no longer considered raw agricultural commodities.

It is EPA's general practice to propose revocation of those tolerances for residues of pesticide chemicals for which there are no active registrations. These revocations will become final unless any person in commenting on the proposal demonstrates a need for the tolerance to cover residues in or on imported commodities or domestic commodities legally treated.

IX. When Do These Actions Become Effective?

EPA proposes that these actions become effective 90 days following publication of a final rule in the **Federal Register**. EPA is proposing this effective date because EPA believes that by this date all existing stocks of pesticide products labeled for the uses associated with the tolerances proposed for revocation will have been exhausted for more than 1 year; giving ample time for any treated fresh produce to clear trade channels. Therefore, EPA believes revocation after a 90–day period should be reasonable. However, if EPA is presented with information that there are existing stocks still available for use and that information is verified, EPA will consider extending the expiration date of the tolerance. If you have comments regarding existing stocks and whether the effective date accounts for these stocks, please submit comments as described in Unit IV of the SUPPLEMENTARY INFORMATION section of this notice.

Any commodities listed in the regulatory text of this notice that are treated with the pesticides subject to this notice, and that are in the channels of trade following the tolerance revocations, shall be subject to FFDCA section 408(1)(5), as established by FQPA. Under this section, any residue of these pesticides in or on such food shall not render the food adulterated so long as it is shown to the satisfaction of FDA that, (1) the residue is present as the result of an application or use of the pesticide at a time and in a manner that was lawful under FIFRA, and (2) the residue does not exceed the level that was authorized at the time of the application or use to be present on the food under a tolerance or exemption from tolerance. Evidence to show that food was lawfully treated may include records that verify the dates that the pesticide was applied to such food.

X. What Can I Do If I Wish the Agency to Maintain a Tolerance That the Agency Proposes to Revoke?

In addition to submitting comments in response to this proposed rule, you may also submit an objection. EPA subsequently issues a final rule after considering the comments that are submitted in response to this notice. If you fail to file an objection to the final rule within the time period specified, you will have waived the right to raise any issues resolved in the final rule. After the specified time, the issues resolved in the final rule cannot be raised again in any subsequent proceedings.

This proposal provides 60 days for any interested person to demonstrate a need for retaining a tolerance, if retention of the tolerance will meet the tolerance standard established under FQPA. If EPA receives a comment to that effect, EPA will not proceed to revoke the tolerance immediately. However, EPA will take steps to ensure the submission of any needed supporting data and will issue an order in the **Federal Register** under FFDCA section 408(f) if needed. The order would specify the data needed, the time frames for its submission, and would require that within 90 days some person or persons notify EPA that they will submit the data. If the data are not submitted as required in the order, EPA will take appropriate action under FIFRA or FFDCA.

XI. How Do the Regulatory Assessment Requirements Apply to this Action?

A. Is this a ''Significant Regulatory Action''?

No. Under Executive Order 12866, entitled *Regulatory Planning and Review* (58 FR 51735, October 4, 1993), this action is not a ''significant regulatory action.'' The Office of Management and Budget (OMB) has determined that tolerance actions, in general, are not ''significant'' unless the action involves the revocation of a tolerance that may result in a substantial adverse and material affect on the economy. In addition, this action is not subject to Executive Order 13045, entitled *Protection of Children from Environmental Health Risks and Safety Risks* (62 FR 19885, April 23, 1997), because this action is not an economically significant regulatory action as defined by Executive Order 12866. Nonetheless, environmental health and safety risks to children are considered by the Agency when determining appropriate tolerances. Under FQPA, EPA is required to apply an additional 10-fold safety factor to risk assessments in order to ensure the protection of infants and children unless reliable data supports a different safety factor.

B. Does this Action Contain Any Reporting or Recordkeeping Requirements?

No. This action does not impose any information collection requirements subject to OMB review or approval pursuant to the Paperwork Reduction Act (44 U.S.C. 3501 et seq.).

C. Does this Action Involve Any ''Unfunded Mandates''?

No. This action does not impose any enforceable duty, or contain any ''unfunded mandates'' as described in Title II of the Unfunded Mandates Reform Act of 1995 (Pub. L. 104–4).

D. Do Executive Orders 12875 and 13084 Require EPA to Consult with States and Indian Tribal Governments Prior to Taking the Action in this Notice?

No. Under Executive Order 12875, entitled *Enhancing Intergovernmental Partnerships* (58 FR 58093, October 28, 1993), EPA may not issue a regulation that is not required by statute and that creates a mandate upon a State, local or tribal government, unless the Federal government provides the funds necessary to pay the direct compliance costs incurred by those governments. If the mandate is unfunded, EPA must provide to the Office of Management

and Budget (OMB) a description of the extent of EPA's prior consultation with representatives of affected State, local and tribal governments, the nature of their concerns, copies of any written communications from the governments, and a statement supporting the need to issue the regulation. In addition, Executive Order 12875 requires EPA to develop an effective process permitting elected officials and other representatives of State, local and tribal governments ''to provide meaningful and timely input in the development of regulatory proposals containing significant unfunded mandates.''

Today's proposed rule does not create an unfunded Federal mandate on State, local or tribal governments. The rule does not impose any enforceable duties on these entities. Accordingly, the requirements of section 1(a) of Executive Order 12875 do not apply to this proposed rule.

Under Executive Order 13084, entitled *Consultation and Coordination with Indian Tribal Governments* (63 FR 27655, May 19, 1998), EPA may not issue a regulation that is not required by statute, that significantly or uniquely affects the communities of Indian tribal governments, and that imposes substantial direct compliance costs on those communities, unless the Federal government provides the funds necessary to pay the direct compliance costs incurred by the tribal governments. If the mandate is unfunded, EPA must provide OMB, in a separately identified section of the preamble to the rule, a description of the extent of EPA's prior consultation with representatives of affected tribal governments, a summary of the nature of their concerns, and a statement supporting the need to issue the regulation. In addition, Executive Order 13084 requires EPA to develop an effective process permitting elected and other representatives of Indian tribal governments ''to provide meaningful and timely input in the development of regulatory policies on matters that significantly or uniquely affect their communities.''

Today's proposed rule does not significantly or uniquely affect the communities of Indian tribal governments. This action does not involve or impose any requirements that affect Indian Tribes. Accordingly, the requirements of section 3(b) of Executive Order 13084 do not apply to this proposed rule.

E. Does this Action Involve Any Environmental Justice Issues?

No. This proposed rule does not involve special considerations of environmental-justice related issues pursuant to Executive Order 12898, entitled ''Federal Actions to Address Environmental Justice in Minority Populations and Low-Income Populations'' (59 FR 7629, February 16, 1994).

F. Does this Action Have a Potentially Significant Impact on a Substantial Number of Small Entities?

No. The Agency has certified that tolerance actions, including the tolerance actions in this document, are not likely to result in a significant adverse economic impact on a substantial number of small entities. The factual basis for the Agency's determination, along with its generic certification under section 605(b) of the Regulatory Flexibility Act (RFA) (5 U.S.C. 601 *et seq.*), appears at 63 FR 55565, October 16, 1998 (FRL–6035–7). This generic certification has been provided to the Chief Counsel for Advocacy of the Small Business Administration.

G. Does this Action Involve Technical Standards?

No. This tolerance action does not involve any technical standards that would require Agency consideration of voluntary consensus standards pursuant to section 12(d) of the National Technology Transfer and Advancement Act of 1995 (NTTAA), Pub. L. 104–113, Section 12(d) (15 U.S.C. 272 note). Section 12(d) directs EPA to use voluntary consensus standards in its regulatory activities unless doing so would be inconsistent with applicable law or otherwise impractical. Voluntary consensus standards are technical standards (e.g., materials specifications, test methods, sampling procedures, business practices, etc.) that are developed or adopted by voluntary consensus standards bodies. The NTTAA requires EPA to provide Congress, through OMB, explanation when the Agency decides not to use available and applicable voluntary consensus standards. EPA invites public comment on this conclusion.

H. Are There Any International Trade Issues Raised by this Action?

These revocations will not become final if comments are received which demonstrate the need to maintain the tolerance to cover residues in or on imported commodities. However, data must be submitted that support the continued tolerance. The U.S. EPA is developing guidance concerning data requirements for import tolerance support. This guidance will be made available to interested persons.

I. Is this Action Subject to Review under the Congressional Review Act?

No. This action is not a final rule. Under 5 U.S.C. 801(a)(1)(A) of the Administrative Procedure Act (APA) as amended by the Small Business Regulatory Enforcement Fairness Act of 1996 (Title II of Pub. L. 104–121, 110 Stat. 847), only final rules must be submitted to the U.S. Senate, the U.S. House of Representatives, and the Comptroller General of the United States prior to publication in the **Federal Register**.

List of Subjects

40 CFR Part 180

Environmental protection, Administrative practice and procedure, Agricultural commodities, Pesticides and pests, Reporting and recordkeeping requirements.

40 CFR Part 185

Environmental Protection, Food additives, Pesticide and pest.

40 CFR Part 186

Environmental Protection, Animal feeds, Pesticide and pest.

Dated: March 31, 1999.

Lois Rossi,

Director, Special Review and Reregistration Division, Office of Pesticide Programs.

Therefore, it is proposed that 40 CFR parts 180, 185 and 186 be amended as follows:

PART 180--[AMENDED]

1. In part 180:

a. The authority citation for part 180 continues to read as follows:

Authority: 21 U.S.C. 321(q), 346a and 371.

§§ 180.102, 180.124, 180.130, 180.150, and 180.161 [Removed]

b. By removing §§ 180.102, 180.124, 180.130, 180.150 and 180.161.

c. Section 180.189 is revised to read as follows:

§ 180.189 Coumaphos; tolerances for residues.

Tolerances for residues of the insecticide coumaphos (*O,O*-diethyl 0-3-chloro-4-methyl-2-oxo- 2*H*-1-benzopyran-7-yl phosphorothioate and its oxygen analog (*O,O*-diethyl 0-3-chloro-4-methyl-2-oxo- 2H-1-benzopyran-7-yl phosphate) in or on raw food commodities as follows:

Commodity	Parts per million
Cattle, fat	1.0
Cattle, meat	1.0

Commodity	Parts per million
Cattle, mbyp	1.0
Goat, fat	1.0
Goat, meat	1.0
Goat, mbyp	1.0
Hog, fat	1.0
Hog, meat	1.0
Hog, mbyp	1.0
Horse, fat	1.0
Horse, meat	1.0
Horse, mbyp	1.0
Milk, fat (=n in whole milk)	0.5
Sheep, fat.	1.0
Sheep, meat	1.0
Sheep, mbyp	1.0

§ 180.205 [Amended]

d. By removing from § 180.205(a), *Paraquat*, the entries for bean straw; hops, fresh; hop vines; lentil, hay; oat grain; peanut, vines; poultry, fat; poultry, meat; poultry, mbyp; rye grain, and sunflower, seed hulls.

§§ 180.221, 180.244, and 180.250 [Removed]

e. By removing §§ 180.221, 180.244, and 180.250.

§ 180.262 [Amended]

f. By removing, from § 180.262(a), *Ethoprop; tolerances for residues*, the entry for mushrooms.

§ 180.363 [Removed]

g. By removing § 180.363.

§ 180.384 [Amended]

h. By removing from § 180.384(a), *N,N-dimethylpiperidinium chloride; tolerances for residues*, the entries for cotton forage; cottonseed; cottonseed meal; eggs; milk; poultry, fat; poultry, mbyp; and poultry, meat.

§ 180.520 [Removed]

i. By removing § 180.520.

PART 185—[AMENDED]

1. In part 185:

a. The authority citation for part 185 continues to read as follows:

Authority: 21 U.S.C. 346a, 348.

§§ 185.1500 and 185.4650 [Removed]

b. By removing §§ 185.1500 and 185.4650.

PART 186—[AMENDED]

1. In part 186:

a. The authority citation for part 186 continues to read as follows:

Authority: 21 U.S.C. 342, 348, and 371.

§§ 186.1500 [Removed]

b. By removing § 186.1500.

[FR Doc. 99–8635 Filed 4–6–99; 8:45 am]

BILLING CODE 6560–50–F

FEDERAL COMMUNICATIONS COMMISSION

47 CFR Part 25

[IB Docket No. 99–81; RM–9328; FCC 99–50]

The Establishment of Policies and Service Rules for the Mobile Satellite Service in the 2 GHz Band

AGENCY: Federal Communications Commission.

ACTION: Proposed rule.

SUMMARY: The Federal Communications Commission (FCC) proposes to amend the regulations covering the 1.6/2.4 GHz Mobile Satellite Service (MSS) to incorporate the rules for the 2 GHz MSS in a Notice of proposed rulemaking (Notice). The Notice also seeks comment on non-service link issues, service rules, and frequency coordination. The actions are necessary to establish service rules for the 2 GHz MSS and to obtain public comment on policies for the 2 GHz MSS. The effect of amending the existing 1.6/2.4 GHz MSS rules to incorporate the 2 GHz MSS is to simplify and harmonize the rules for these types of satellite services in the Commission's rules.

DATES: Submit comments on or before June 24, 1999 and submit reply comments on or before July 26, 1999.

ADDRESSES: Office of the Secretary, Federal Communications Commission, 445 Twelfth Street, S.W., Washington, D.C. 20554. Comments may be filed using the Commission's Electronic Comment Filing System (ECFS) or by filing paper copies. *See Electronic Filing of Documents in Rulemaking Proceedings*, 63 FR 24121 (May 1, 1998). Comments filed through the ECFS can be sent as an electronic file via the Internet to <http://www.fcc.gov/e-file/ecfs.html>. Generally, only one copy of an electronic submission must be filed. If multiple docket or rulemaking numbers appear in the caption of this proceeding, however, commenters must transmit one electronic copy of the comments to each docket or rulemaking number referenced in the caption. In completing the transmittal screen, commenters should include their full name, Postal Service mailing address, and the applicable docket or rulemaking number. Parties may also submit an electronic comment by Internet e-mail. To get filing instructions for e-mail comments, commenters should send an e-mail to ecfs@fcc.gov, and should include the following words in the body of the message, ''get form <your e-mail address>.'' A sample form and directions will be sent in reply.

FOR FURTHER INFORMATION CONTACT: *Technical Information:* Alex Roytblat, 202–418–7501; *Legal Information:* Chris Murphy, 202–418–2373 or Howard Griboff, 202–418–0657.

SUPPLEMENTARY INFORMATION:

1. The Commission is authorized to conduct this rulemaking pursuant to its statutory authority contained in the Communications Act of 1934, as amended. 47 U.S.C. 154(i), 303(v). The Notice proposes to grant in part the Petition for Expedited Rulemaking (RM–9328) filed by ICO Services Limited, which requests that the Commission establish service rules for the 2 GHz mobile satellite service by amending the existing Big LEO mobile satellite service rules rather than by developing an entirely new set of rules. The Notice also proposes not to adopt financial qualification entry criteria because all of the proposed systems can be accommodated in the available spectrum. The Notice proposes four main spectrum assignment options. The first is a ''flexible band arrangement'' that would grant each system 2.5 MHz in uplink and downlink spectrum, group systems in segments based on the particular technology used, and provide expansion spectrum between the assigned segments for additional system requirements. The second proposes a ''negotiated entry'' approach that would license all the applicants across the entire band and leave it to them to coordinate their operations with the Commission being available to resolve disputes. The third and fourth options, respectively, are a ''traditional band arrangement'' in which the spectrum would be divided equally among the applicants, and a proposal to auction licenses in the event that none of the preceding three options is viable. The Notice also asks commenters to propose different spectrum assignment alternatives or whether there are other viable approaches or combinations to sharing this spectrum.

2. The Notice reviews each proposed service rule and seeks comment on specific proposals for applying the rules to the 2 GHz MSS. For instance, the Notice seeks comment on the appropriate license term for 2 GHz MSS systems and whether they should be required to build their systems with public safety capabilities such as

position determination and automatic number identification. The Notice also requests commenters to address the need for service to rural and unserved areas, including Indian reservations, in their comments, and the role that these new systems can play in meeting this need. Specifically, the Notice asks commenters to address whether one criterion for resolution of expansion band coordination disputes should be whether a licensee is providing service to unserved areas, or whether licensees should be granted extensions of system implementation milestones if they will provide service to unserved communities.

3. In addition, the Notice seeks comment whether and how orbital debris mitigation practices should be applied to 2 GHz mobile satellite systems. The Notice also seeks comment on out-of-band emission requirements and incorporating the Global Mobile Personal Communications Service and handset roaming authorization procedures addressed in a rulemaking recently adopted by the Commission (IB Docket No. 99–67, FCC 99–37 (released March 5, 1999). Moreover, the Notice acknowledges relocation issues associated with the authorization of the 2 GHz MSS and offers commenters an opportunity to address any in-band sharing issues, particularly as they may affect the Commission's choice of assignment methods in this proceeding. Finally, the Notice seeks input on international coordination of the U.S. 2 GHz MSS band arrangement. In this regard, the Notice seeks input on ways the U.S. band arrangement could achieve compatibility with the existing European 2 GHz MSS band arrangement.

Initial Regulatory Flexibility Analysis

Pursuant to the Regulatory Flexibility Act of 1990, 5 U.S.C. 601–612, (RFA) as amended by the Contract with America Advancement Act of 1996, Public Law No. 104–121, 110 Stat. 847, the Commission's Initial Regulatory Flexibility Analysis with respect to this Notice of Proposed Rulemaking is as follows:

Reason for and Objectives of the Proposed Rule: This Notice of Proposed Rulemaking (Notice) seeks comment on various proposals for creating a spectrum assignment approach that would accommodate all proposed 2 GHz MSS systems and provide service to consumers as quickly as possible. This Notice also seeks comment on proposals for service rules to apply to 2 GHz MSS systems. These actions are necessary for the Commission to evaluate these proposals and seek comment from the public on any other alternatives. The objective of this proceeding is to assign the 2 GHz MSS spectrum in an efficient manner and create rules to ensure systems implement their proposals in a manner that serves the public interest. We believe that adoption of the proposed rules will reduce regulatory burdens and, with minimal disruption to existing permittees and licensees, result in the continued development of 2 GHz MSS and other satellite services to the public.

Legal Basis: This Notice is adopted pursuant to Sections 1, 4(i), 303(r), 303(v), 307, 309(a), 309(j), 310, 319(d), 321(b), 332, 359 of the Communications Act of 1934, as amended, 47 U.S.C. 151, 154(i), 303(r), 303(v), 307, 309(a), 309(j), 310, 319(d), 321(b), 332, 359 and 5 U.S.C. 553 of the Administrative Procedures Act.

Description and Estimate of Small Entities Subject to the Rules: The Commission has not developed a definition of small entities applicable to geostationary or non-geostationary orbit fixed-satellite or mobile satellite service operators. Therefore, the applicable definition of small entity is the definition under the Small Business Administration (SBA) rules applicable to Communications Services, Not Elsewhere Classified. This definition provides that a small entity is one with $11.0 million or less in annual receipts. According to Census Bureau data, there are 848 firms that fall under the category of Communications Services, Not Elsewhere Classified which could potentially fall into the 2 GHz MSS category. Of those, approximately 775 reported annual receipts of $11 million or less and qualify as small entities. The rules proposed in this Notice apply only to entities providing 2 GHz mobile satellite service. Small businesses may not have the financial ability to become 2 GHz MSS system operators because of the high implementation costs associated with satellite systems and services. At least one of the 2 GHz MSS applicants may be considered a small business at this time. We expect, however, that by the time of implementation it will no longer be considered a small business due to the capital requirements for launching and operating its proposed system. Since there is limited spectrum and orbital resources available for assignment, we estimate that no more than 9 entities will be approved by the Commission as operators providing these services. Therefore, because of the high implementation costs and the limited spectrum resources, we do not believe that small entities will be impacted by this rulemaking to a great extent.

Reporting, Recordkeeping, and Other Compliance Requirements: The proposed action in this Notice would affect those entities applying for 2 GHz MSS space station and earth station authorizations and those applying to participate in assignment of 2 GHz MSS spectrum. In the case where there is not any mutual exclusivity, applicants will be required to follow the streamlined application procedures of part 25 for space and earth station licenses by submitting the information required by Form 312, where applicable. In the case where there is mutual exclusivity between applicants for authorizations and spectrum reservations in the case of letter of intent filers, the competitive bidding rules of part 1 will be used to determine the licensee and/or spectrum designee. If auctions are required, applicants and letter of intent filers will have to comply with the requirement to file a short-form (FCC Form 175). Completion of short-form FCC Form 175 to participate in an auction is not estimated to be a significant economic burden for these entities. The action proposed will also affect auction winners in that it will require them to submit a long Form 312 application for authorization. Submission of Form 312 will be required by all 2 GHz MSS applicants and letter of intent filers whether selected through the competitive bidding process or not.

Federal Rules that Overlap, Duplicate or Conflict with These Proposed Requirements: None. One of the main objectives of the Notice is to eliminate any existing overlap or duplication of rules between the 2 GHz MSS and other satellite services.

Steps Taken to Minimize Significant Economic Impact on Small Entities and Significant Alternatives Considered: In developing the proposals contained in this Notice, we have attempted to minimize the burdens on all entities in order to allow maximum participation in the 2 GHz MSS market while achieving our other objectives. We seek comment on the impact of our proposals on small entities and on any possible alternatives that could minimize the impact of our rules on small entities. In particular, we seek comment on alternatives to the reporting, recordkeeping, and other compliance requirements discussed above. Written comments are requested on this Initial Regulatory Flexibility Analysis. These comments must be filed in accordance with the same filing deadlines set for comments on the other issues in this Notice of Proposed Rulemaking, but they must have a separate and distinct heading designating them as responses to the Regulatory Flexibility Analysis.

The Public Affairs, Reference Operations Division, shall send a copy of this Notice to the Chief Counsel for Advocacy of the Small Business Administration in accordance with Section 603(a) of the Regulatory Flexibility Act.

Comments are solicited: Written comments are requested on this Initial Regulatory Flexibility Analysis. These comments must be filed in accordance with the same filing deadlines set for comments on the other issues in this Notice of Proposed Rulemaking, but they must have a separate and distinct heading designating them as responses to the Regulatory Flexibility Analysis.

List of Subjects in 47 CFR Part 25

Satellites.

Federal Communications Commission.

Magalie Roman Salas,

Secretary.

[FR Doc. 99–8510 Filed 4–6–99; 8:45 am]

BILLING CODE 6712–01–P

DEPARTMENT OF TRANSPORTATION

Research and Special Programs Administration

49 CFR Parts 171, 177, 178, 180

[Docket No. RSPA–97–2718 (HM–225A)]

RIN 2137–AD07

Hazardous Materials: Revision to Regulations Governing Transportation and Unloading of Liquefied Compressed Gases

AGENCY: Research and Special Programs Administration (RSPA), DOT.

ACTION: Notice of Negotiated Rulemaking Committee Meeting.

SUMMARY: RSPA gives notice of a negotiated rulemaking advisory committee (the Committee) meeting for May 4–5, 1999. This notice is issued in accordance with the provisions of the Federal Advisory Committee Act. The purpose of this meeting is for the Committee to negotiate the content of a final rule to be issued by RSPA. The final rule will address requirements for alternative safety standards for preventing and mitigating unintentional releases of hazardous materials during the unloading of cargo tank motor vehicles in liquefied compressed gas service. The public is invited to attend; an opportunity for members of the public to make oral presentations will be provided if time permits.

DATES: The May 4–5, 1999 meeting is scheduled from 8:30 a.m. to 4 p.m.

ADDRESSES: The meeting will take place at the Department of Transportation, Room 6244–6248, 400 Seventh Street, SW., Washington, DC.

FOR FURTHER INFORMATION CONTACT: Jennifer Karim or Susan Gorsky, (202) 366–8553, Office of Hazardous Materials Standards, Research and Special Programs Administration, Department of Transportation. Facilitator: Philip J. Harter, The Mediation Consortium, (202) 887–1033.

SUPPLEMENTARY INFORMATION: On March 22, 1999, RSPA published in the **Federal Register** a notice of proposed rulemaking (64 FR 13856) recommending alternative safety standards for preventing and mitigating unintentional releases of hazardous materials during the unloading of cargo tank motor vehicles in liquefied compressed gas service. This proposed rule was developed through consensus by the Committee. The Committee was established to develop recommendations for alternative safety standards for preventing and mitigating unintentional releases of hazardous materials during the unloading of cargo tank motor vehicles in liquefied compressed gas service. Meeting summaries and other relevant materials are placed in the public docket and can be accessed through (http://dms.dot.gov).

Issued in Washington, DC, on April 2, 1999, under authority delegated in 49 CFR Part 1.

Thomas G. Allan,

Acting Director, Office of Hazardous Materials Standards, Research and Special Programs Administration.

[FR Doc. 99–8629 Filed 4–6–99; 8:45 am]

BILLING CODE 4910–60–M

DEPARTMENT OF TRANSPORTATION

Research and Special Programs Administration

49 CFR Parts 192 and 195

[Docket No. RSPA–98–4733; Notice 1]

RIN 2137–AD25

Pipeline Safety: Gas and Hazardous Liquid Pipeline Repair

AGENCY: Research and Special Programs Administration (RSPA), DOT.

ACTION: Notice of proposed rulemaking.

SUMMARY: We are proposing to adopt a safety performance standard for the repair of corroded or damaged steel pipe in gas or hazardous liquid pipelines. Because present safety standards specify particular methods of repair, operators must get approval from government regulators to use innovative repair technologies. The proposed standard would encourage technological innovations and reduce repair costs without reducing safety.

DATES: Submit written comments by June 7, 1999.

ADDRESSES: All comments should identify the docket number and title of this action, which are stated above in the heading. Comments may be mailed or delivered to the Docket Facility, U.S. Department of Transportation, Room #PL–401, 400 Seventh Street, SW, Washington, DC 20590–0001. The original and two copies should be submitted. Persons who want confirmation of mailed comments must include a self-addressed stamped postcard. Comments may also be e-mailed to ops.comments@rspa.dot.gov in ASCII or text format. The Dockets Facility is open from 10:00 a.m. to 5:00 p.m., Monday through Friday, except on Federal holidays when the facility is closed.

FOR FURTHER INFORMATION CONTACT: L. M. Furrow at (202)366–4559 or furrowl@rspa.dot.gov. Comments may be read on the internet at http://dms.dot.gov. General information about RSPA's pipeline safety program can be obtained at http://ops.dot.gov.

SUPPLEMENTARY INFORMATION:

Current Pipeline Repair Safety Standards

If a pipeline operator discovers an unsafe pipe dent during the construction of a steel gas transmission line or main to be operated at 20 percent or more of specified minimum yield strength (SMYS), DOT safety standards require that the operator remove the dent by cutting out the damaged piece of pipe as a cylinder (49 CFR 192.309(b)). This repair requirement does not allow operators to use new or more innovative technologies to repair the dent.

One of the DOT maintenance standards for steel gas transmission lines operating at 40 percent or more of SMYS similarly disallows the use of new technologies (49 CFR 192.713). Under this standard, if an operator discovers an imperfection or damage to pipe that impairs the serviceability of the line, the operator must either replace the pipe or repair it by installing a full encirclement split sleeve of appropriate design. Although this standard permits operators to use two widely-accepted methods of pipe repair, because it prescribes methods of repair rather than what the repair should accomplish, the standard lacks

flexibility. It denies operators the opportunity to take advantage of innovative repair methods. It also discourages operators from developing new repair methods that may be more economical.

Some DOT safety standards governing the repair of corroded pipe also lack flexibility: If a gas transmission line has a large area of general corrosion that has reduced the pipe wall below the thickness required for the maximum allowable operating pressure (MAOP), the corroded pipe must be replaced, unless its operating pressure is reduced (49 CFR 192.485(a)). In gas distribution pipelines, such corroded pipe must be replaced (49 CFR 192.487(a)). In hazardous liquid or carbon dioxide pipelines, such pipe must be replaced unless the operating pressure is reduced (49 CFR 195.416(f)).

All these repair standards were based on recommended industry practices in vogue over 30 years ago. The 1968 edition of the American Society of Mechanical Engineers (ASME) B31.8 Code was the basis for §§ 192.309(b) and 192.713, while §§ 192.485(a) and 192.487(a) were based on the 1969 edition of the National Association of Corrosion Engineers Standard RP–01–69. Section 195.416(f) was based on a comparable provision of the 1966 edition of the ASME B31.4 Code. Since then, the DOT standards based on these practices have not kept pace with changes in technology.

Performance Oriented Standards and Recent Waivers

For steel pipe not subject to repair restrictions under §§ 192.309(b), 192.485(a), 192.487(a), 192.713, or 195.416(f), operators may and do use methods besides pipe replacement and split sleeves to repair corroded or damaged steel pipe. These methods include composite pipe wraps, grinding, hot tapping, and weld deposition. For example, a gouge that impairs the serviceability of a steel gas transmission line operating at less than 40 percent of SMYS is not covered by § 192.713. This defect would be subject to the less restrictive repair requirement of § 192.703(b), which allows repair by any method that returns the pipe to a safe condition.

In recent years, various pipeline operators have sought relief from the requirement to repair high-stress steel gas transmission lines by the traditional methods of pipe replacement or installation of full-encirclement split sleeves. These operators wanted to use a new repair system called Clock Spring® to simplify and reduce the average cost of repairs. This system, which consists of a fiberglass/polyester composite material coiled with adhesive in layers over a filler, reinforces steel pipe that has certain non-leaking defects. According to tests and analyses done by the Gas Research Institute (GRI), when properly installed, the system permanently restores the pressure containing capability of the pipe.[1]

Based on GRI's field and laboratory performance data, we concluded that this new technology provides at least the same level of safety on high-stress transmission lines as pipe replacement or a full-encirclement split sleeve. Therefore, we granted the operators' requests by waiving the applicable requirements.[2] No problems involving installations under the waivers have been reported. Moreover, GRI's inspection of a statistical sample of installations under the waivers did not show any evidence of creep, degradation, or loss of reinforcement.[3]

The Proposal

To add flexibility to §§ 192.309(b), 192.485(a), 192.487(a), 192.713, and 195.416(f), we are proposing to allow operators to use repair methods that meet a performance standard. The proposed standard is that the method must be able to ''permanently restore the serviceability of the pipe.'' We chose this wording because it describes the result expected from replacing damaged pipe or installing a full-encirclement split sleeve over the damage to pipe. We expect at least the same result from a qualified alternative repair method.

As to the permanency of repair, we are not suggesting that the repair should last indefinitely. It need last only as long as the pipe is expected to last under normal operating and maintenance conditions.

Whether a particular repair method will restore the serviceability of the pipe depends on the loading the repaired pipe must support. Sometimes pipe and particularly pipe joints are subjected to significant longitudinal forces imposed by external loads. Where longitudinal forces are a design consideration, a repair method that structurally serves only to contain internal pressure might not suffice to restore the serviceability of the pipe. On the other hand, if longitudinal forces are not a design consideration, a repair method that restores the pressure containing capability of the pipe would restore its serviceability.

We are also proposing that a qualified repair method must have undergone ''reliable engineering tests and analyses'' to confirm that the method meets the performance standard. We do not believe it necessary to propose guidelines for these tests and analyses because of the widespread use of alternative repair methods without reports of failures. So the tests and analyses need only be what a reasonable and prudent professional engineer would consider adequate to demonstrate compliance with the performance standard.

The proposed change to § 192.309(b) merely adds the performance standard to the end of the introductory clause. Operators would then have the option of either removing or repairing the described dents.

In §§ 192.485(a), 192.487(a), and 195.416(f), the proposed performance standard would take the place of present wording that allows the repair of small areas of general corrosion. Consequently, any corroded area, large or small, could be repaired as long as the repair method meets the performance standard. The primary purpose of this change would be to allow the repair of large corroded areas. But we are proposing to apply the proposed performance standard to small corroded areas as well because of the difficulty of distinguishing between small and large areas. Also, current methods being used to repair small corroded areas readily qualify under the proposed performance standard.

As for § 192.713, besides including the proposed performance standard, we are proposing to remove the sentences specifically allowing repair by full-encirclement split sleeves (paragraphs (a)(2) and (b)). This well-established repair method readily qualifies under the proposed performance standard.

In addition, we are proposing to drop the priority that § 192.713 now gives to

[1] D. R. Stephens, Summary of Validation of Clock Spring® for Permanent Repair of Pipeline Corrosion Defects, GRI–98/0227, Gas Research Institute, Chicago, Illinois, October 1998.

[2] First we granted the Panhandle Eastern Corporation a waiver of § 192.713(a) to install Clock Spring® over six corrosion anomalies on Line #2 in Ohio, subject to certain monitoring and reporting conditions (58 FR 13823; March 15, 1993). Then we granted 28 interstate operators and their subsidiaries a waiver of §§ 192.485(a) and 192.713(a) to install Clock Spring® on transmission line pipe operating at 40 percent or more of SMYS, provided the operators follow the manufacturer's installation procedures, use GRIWrap® (a computer program that determines if a defect is suitable for Clock Spring® repair), participate in GRI's evaluation plan, notify us and state interstate agents of planned installations, and use trained installers (60 FR 10630; February 27, 1995). Next we extended the February 27th waiver to include six more interstate operators (60 FR 47800; September 14, 1995). Subsequently, we authorized a few additional interstate operators to apply the February 27th waiver, and we approved similar waivers granted intrastate operators by state pipeline safety agencies in Illinois, Wyoming, and Minnesota.

[3] D. R. Stephens, op. cit., p. 53.

repair by replacement whenever it is feasible to take a damaged pipeline out of service. We know of no compelling safety reason to justify this priority, and it does not permit the use of other qualified, more economical repair methods while a pipeline is shut down. For regulatory consistency, we would also remove a similar replacement priority from § 192.717, which governs the repair of leaks.

Finally, we are proposing to terminate the requirement under §§ 192.713(a)(1) and 192.717(a)(1) that replacement pipe have ''similar or greater design strength'' than the pipe being replaced. This qualification, which does not apply to the replacement of corroded pipe under §§ 192.485, 192.487, or 195.416, may result in an overly conservative design that is unnecessary for current operations. The safety of all replacement pipe in gas transmission lines is otherwise governed by the material, design, construction, and testing requirements of Part 192.

Regulatory Analyses and Notices

A. Executive Order 12866 and DOT Policies and Procedures

The Office of Management and Budget (OMB) does not consider this proposed rulemaking to be a significant regulatory action under Section 3(f) of Executive Order 12866 (58 FR 51735; October 4, 1993). Therefore, OMB has not reviewed this rulemaking document. DOT does not consider this proposed rulemaking significant under its regulatory policies and procedures (44 FR 11034; February 26, 1979).

The proposed rule changes would provide operators flexibility to choose the most cost-effective method of repairing pipe, while maintaining public safety. Thus, the changes would not add costs to industry, government, or the public. In fact, the proposed changes should reduce operators' costs of transporting oil and gas, and perhaps the price consumers pay for these products. In comments on a proposed waiver to the Panhandle Eastern Corporation, the American Gas Association estimated that industry could save $6.5 million a year by using composite wrap to repair corroded or damaged pipe. Although part of the gas pipeline industry is already realizing these savings because of the Panhandle and other waivers,[4] the proposed changes would create a similar opportunity for savings by the entire oil and gas pipeline industry. And still more savings could possibly result from the use of innovative technologies not covered by the waivers. This proposed rulemaking fosters the use and development of new repair technologies without additional cost to the regulated industry. A regulatory evaluation document is available for review in the docket.

B. Regulatory Flexibility Act

The proposed rule changes would not impose additional requirements on pipeline operators, including small entities that operate regulated pipelines. Rather, the proposed changes would offer operators the opportunity to use more economical methods of repairing corroded or damaged pipe. Thus, this proposal may reduce costs to operators, including small entities. Based on the facts available about the anticipated impact of this proposed rulemaking, I certify, pursuant to Section 605 of the Regulatory Flexibility Act (5 U.S.C. 605), that this proposed rulemaking would not have a significant economic impact on a substantial number of small entities.

C. Executive Order 13084

The proposed rules have been analyzed in accordance with the principles and criteria contained in Executive Order 13084, ''Consultation and Coordination with Indian Tribal Governments.'' Because the proposed rules would not significantly or uniquely affect the Indian tribal governments, the funding and consultation requirements of Executive Order 13084 do not apply.

D. Paperwork Reduction Act

This proposed rulemaking contains no information collection that is subject to review by OMB under the Paperwork Reduction Act of 1995.

E. Unfunded Mandates Reform Act of 1995

This proposed rulemaking would not impose unfunded mandates under the Unfunded Mandates Reform Act of 1995. It would not result in costs of $100 million or more to either State, local, or tribal governments, in the aggregate, or to the private sector, and would be the least burdensome alternative that achieves the objective of the rule.

F. National Environmental Policy Act

We have analyzed the proposed rule changes for purposes of the National Environmental Policy Act (42 U.S.C. 4321 *et seq.*). Because the changes would require that alternative repair methods be as safe as the methods now allowed, we have preliminarily determined that the proposed changes would not significantly affect the quality of the human environment. An environmental assessment document is available for review in the docket.

G. Impact on Business Processes and Computer Systems

Many computers that use two digits to keep track of dates will, on January 1, 2000, recognize ''double zero'' not as 2000 but as 1900. This glitch, the Year 2000 problem, could cause computers to stop running or to start generating erroneous data. The Year 2000 problem poses a threat to the global economy in which Americans live and work. With the help of the President's Council on Year 2000 Conversion, Federal agencies are reaching out to increase awareness of the problem and to offer support. We do not want to impose new requirements that would mandate business process changes when the resources necessary to implement those requirements would otherwise be applied to the Year 2000 Problem.

This notice of proposed rulemaking does not propose business process changes or require modifications to computer systems. Because this notice apparently does not affect the ability of organizations to respond to the Year 2000 problem, we do not intend to delay the effectiveness of the rule changes proposed in this notice.

H. Executive Order 12612

This action would not have substantial direct effects on states, on the relationship between the Federal Government and the states, or on the distribution of power and responsibilities among the various levels of government.

Therefore, in accordance with Executive Order 12612 (52 FR 41685; October 30, 1987), RSPA has determined that the proposed rules do not have sufficient federalism implications to warrant preparation of a Federalism Assessment.

List of Subjects

49 CFR Part 192

Natural gas, Pipeline safety, Reporting and recordkeeping requirements.

49 CFR Part 195

Ammonia, Carbon dioxide, Petroleum, Pipeline safety, Reporting and recordkeeping requirements.

In consideration of the foregoing, we propose to amend 49 CFR parts 192 and 195 as follows:

PART 192—[AMENDED]

1. The authority citation for part 192 continues to read as follows:

[4] See note 2.

Authority: 49 U.S.C. 5103, 60102, 60104, 60108, 60109, 60110, 60113, and 60118; and 49 CFR 1.53.

2. In § 192.309, paragraph (b) introductory text would be revised to read as follows:

§ 192.309 Repair of steel pipe.

* * * * *

(b) Each of the following dents must be removed from steel pipe to be operated at a pressure that produces a hoop stress of 20 percent, or more, of SMYS, unless the dent is repaired by a method that can permanently restore the serviceability of the pipe, as shown by reliable engineering tests and analyses:

* * * * *

3. Section 192.485(a) would be revised to read as follows:

§ 192.485 Remedial measures: Transmission lines.

(a) *General corrosion*. Each segment of transmission line with general corrosion and with a remaining wall thickness less than that required for the MAOP of the pipeline must be replaced or the operating pressure reduced commensurate with the strength of the pipe based on actual remaining wall thickness. However, corroded pipe may be repaired by a method that can permanently restore the serviceability of the pipe, as shown by reliable engineering tests and analyses. Corrosion pitting so closely grouped as to affect the overall strength of the pipe is considered general corrosion for the purpose of this paragraph.

* * * * *

4. Section 192.487(a) would be revised to read as follows:

§ 192.487 Remedial measures: Distribution lines other than cast iron or ductile iron lines.

(a) *General corrosion*. Except for cast iron or ductile iron pipe, each segment of generally corroded distribution line pipe with a remaining wall thickness less than that required for the MAOP of the pipeline, or a remaining wall thickness less than 30 percent of the nominal wall thickness, must be replaced.

However, corroded pipe may be repaired by a method that can permanently restore the serviceability of the pipe, as shown by reliable engineering tests and analyses. Corrosion pitting so closely grouped as to affect the overall strength of the pipe is considered general corrosion for the purpose of this paragraph.

* * * * *

5. Section 192.713 would be revised to read as follows:

§ 192.713 Transmission lines: Permanent field repair of imperfections and damages.

(a) Each imperfection or damage that impairs the serviceability of pipe in a steel transmission line operating at or above 40 percent of SMYS must be—

(1) Removed by cutting out and replacing a cylindrical piece of pipe; or

(2) Repaired by a method that can permanently restore the serviceability of the pipe, as shown by reliable engineering tests and analyses.

(b) Operating pressure must be reduced to a safe level during repair operations.

6. In 192.717, paragraph (a)(1) and paragraph (a)(2) introductory text would be revised to read as follows:

§ 192.717 Transmission lines: Permanent field repair of leaks.

(a) * * *

(1) Remove the leak by cutting out and replacing a cylindrical piece of pipe.

(2) Install a full encirclement welded split sleeve of appropriate design, unless the transmission line:

* * * * *

PART 195—[AMENDED]

7. The authority citation for Part 195 continues to read as follows:

Authority: 49 U.S.C. 5103, 60102, 60104, 60108, 60109, 60118, and 49 CFR 1.53.

8. Section 195.416(f) would be revised to read as follows:

§ 195.416 External corrosion control.

* * * * *

(f) Any pipe that is found to be generally corroded so that the remaining wall thickness is less than the minimum thickness required by the pipe specification tolerances must be replaced with coated pipe that meets the requirements of this part. However, generally corroded pipe need not be replaced if—

(1) The operating pressure is reduced to be commensurate with the limits on operating pressure specified in this subpart, based on the actual remaining wall thickness; or

(2) The pipe is repaired by a method that can permanently restore the serviceability of the pipe, as shown by reliable engineering tests and analyses.

* * * * *

Issued in Washington, D.C. on April 1, 1999.

Richard B. Felder,

Associate Administrator for Pipeline Safety.

[FR Doc. 99–8574 Filed 4–6–99; 8:45 am]

BILLING CODE 4910–60–P

DEPARTMENT OF TRANSPORTATION

Research and Special Programs Administration

49 CFR Parts 192 and 195

[Docket No. RSPA–97–2762; Notice 2]

RIN 2137–AD24

Pipeline Safety: Corrosion Control on Gas and Hazardous Liquid Pipelines

AGENCY: Research and Special Programs Administration (RSPA), DOT.

ACTION: Notice of public meeting and request for comments.

SUMMARY: We are considering the need to modify our corrosion control standards for gas and hazardous liquid pipelines. To start, we are reviewing the gas standards to see if any need to be clarified, made more effective, or upgraded to be consistent with modern safety practices. The review will help us carry out the President's Regulatory Reinvention Initiative and determine if rule changes are needed to reduce the potential for corrosion-caused incidents. So far, we have held a public meeting and met with knowledgeable persons from industry and state regulatory agencies on the adequacy of the standards. Now, to get feedback on the results of these efforts, interested persons are invited to participate in a second public meeting and to submit written comments on the matters discussed in this notice. The public meeting will be in conjunction with the National Association of Corrosion Engineers (NACE) 54th Annual Conference and Exhibition, CORROSION/99, in San Antonio, Texas.

DATES: The public meeting will be on April 28, 1999, from 8:00 am to 12:00 noon at the Marriott Riverwalk Hotel in San Antonio, Texas. If you want to make an oral presentation at the meeting, please notify Jenny Donohue no later than April 23, 1999, by phone (202–366–4046) or by Internet e-mail (donohuej@rspa.dot.gov), and indicate the approximate length of your presentation. In addition, no later than June 30, 1999, you may submit written comments by mailing or delivering an original and two copies to the Dockets Facility, U.S. Department of Transportation, Room PL–401, 400 Seventh Street, SW, Washington, DC 20590–0001. Or you may submit written comments to the docket electronically. To do so, log on to the following Internet Web address: http://dms.dot.gov. Click on ''Help & Information'' for instructions on how to file a document electronically. All

written comments should identify the docket and notice numbers stated in the heading of this notice. Anyone who wants confirmation of mailed comments must include a self-addressed stamped postcard. Late filed comments will be considered so far as practicable.

ADDRESSES: The Marriott Riverwalk Hotel is located at 101 Bowie Street, San Antonio, TX 78205, phone: (210) 223–1000. The Dockets Facility is located on the plaza level of the Nassiff Building, Room PL–401, 400 Seventh Street, SW, Washington, DC. It is open from 10:00 a.m. to 5:00 p.m., Monday through Friday, except federal holidays when it is closed.

FOR FURTHER INFORMATION CONTACT: Richard Lopez by phone at 713–718–3956 or by Internet e-mail at richard.lopez@rspa.dot.gov. You can read comments and other material in the docket (RSPA–97–2762) at this Internet Web address: http://dms.dot.gov. General information about our pipeline safety program is available at this Internet Web address: http://ops.dot.gov. Graphs showing the rate of pipeline incidents due to corrosion will also be posted at that Web address.

SUPPLEMENTARY INFORMATION:

Background

Outside-force damage and corrosion are, respectively, the number one and number two causes of reported incidents on gas and hazardous liquid pipelines. Persons who participated in our Risk Assessment Prioritization (RAP) program, which we use to allocate our resources, rated the risk of outside-force damage as ''very high'' and the risk of corrosion as ''high.'' In an effort to reduce outside-force damage, we have established standards for operator programs designed to prevent excavation damage and for state programs that oversee one-call notification systems. Recently we began working with other concerned organizations to inform the public on ways to reduce damage to all underground utilities and to study and promote the use of the best practices in damage prevention. For the corrosion risk, RAP participants identified several risk mitigating activities, the more significant of which, such as creating risk-based inspection programs, establishing cathodic protection criteria for hazardous liquid pipelines, and defining electrical survey alternatives, are among the concerns mentioned below.

Our statistical analyses of the data that operators report under 49 CFR Parts 191 and 195 show that while corrosion remains the second leading cause of reported pipeline incidents, the rate of reportable incidents due to corrosion has declined in recent years. Also, as shown by the table below for the period 1986 through 1998, the likelihood of corrosion-caused incidents harming people or the environment continues to be relatively low. Still, we think the record warrants our attention and indicates there may be reasons to improve our corrosion control standards to reduce the potential for future incidents. We are especially interested in evaluating the best long-term corrosion control measures to determine if cost-effective means of further reducing corrosion can be implemented.

Pipeline	Percent of all incidents	Percent of all deaths	Percent of all injuries	Percent of all property damages
Gas transmission and gathering	22.7	0	3.7	13
Gas distribution (non-plastic)	4.9	5.6	7.0	3.9
Hazardous liquid	25.7	3.2	0.9	20

To evaluate alternative regulatory strategies and in further response to the President's Regulatory Reinvention Initiative [1], on September 8, 1997, we held a public meeting on how the corrosion control standards in 49 CFR Parts 192 and 195 might be improved (62 FR 44436; Aug. 21, 1997). The meeting was held in Oakbrook Illinois in conjunction with NACE's Fall Committee Meetings to attract participation by experts in corrosion control. NACE is an international organization that provides training and certification programs, conferences, standards, and reports on the prevention and control of materials corrosion.

The Oakbrook meeting focused primarily on whether our corrosion control standards should incorporate by reference NACE Standard RP0169–96, ''*Control of External Corrosion on Underground or Submerged Metallic Piping Systems*,'' as a substitute for all or some of the requirements, and whether the requirements should be the same for gas and hazardous liquid pipelines. Many participants and subsequent commenters opposed incorporating the NACE document by reference because it is not entirely written in regulatory, or mandatory, style. There was also general agreement that although some changes may be needed, our corrosion control standards for gas and hazardous liquid pipelines should be generally the same.

After the Oakbrook meeting, we began a detailed review of the corrosion control standards in 49 CFR Part 192, Subpart I. We began reviewing the gas pipeline standards rather than the standards for hazardous liquid pipelines in Part 195 because the gas standards provide more detailed criteria. To help in this effort, we have met from time to time with representatives from NACE, the pipeline industry, and state governments. The meetings have helped us assess whether the Subpart I standards are adequate for safety, need clarification, or allow the use of new technologies.

In order to have the same standards for gas and hazardous liquid pipelines, we are now considering whether the gas pipeline standards, possibly with some changes, would be suitable for hazardous liquid pipelines. The advantage of applying the gas standards to hazardous liquid pipelines is that the gas standards are less ambiguous than the hazardous liquid standards. However, changes besides those that may be needed for gas pipelines may be needed to accommodate the different operating characteristics of hazardous liquid pipelines, such as temperature and commodity corrosiveness.

To optimize our review process, we have assigned the following priorities to different segments of the nation's pipeline infrastructure: We are considering hazardous liquid pipelines first, because the current Part 195 corrosion control standards are ambiguous in many respects and because corrosion-caused failures on these lines pose risks to the

[1] On March 4, 1995, President Clinton issued a memorandum to heads of departments and agencies calling for a review of all agency regulations and elimination or revision of those that are outdated or in need of reform.

environment as well as public safety. Next in importance are gas transmission and non-rural gathering lines because of the continuing high percentage of corrosion-caused incidents. Finally comes gas distribution lines, because assessing the need to modify standards to account for operational differences between gas transmission and distribution lines and among gas distribution systems is more difficult, requiring more information about systems and possible alternatives to present standards. These three stages of review may result in publication of one or more notices of proposed rulemaking later this year after considering all the comments we receive as a result of this notice.

Guiding Principles

At our latest meetings with industry and state representatives, in Houston, Texas on February 16–19, 1999, at the Marriott Westside Hotel, and in Washington, DC on March 11, 1999, at our headquarters, the following principles were developed to guide our assessment of the need to improve or clarify the corrosion control standards:

- Evaluate existing data and use the evaluation to assess the need to change standards.
- Continue to improve public safety and environmental protection.
- Assess the need for corrosion control standards throughout the national pipeline system based on the risk associated with different parts of the system.
- Upgrade regulations to allow for future changes in pipeline industry technology and operating practices as appropriate.
- Strive for uniform interpretation/enforcement.
- To the extent practicable, involve all interested parties in assessing the need to change standards.
- Use the new cost/benefit policy framework being developed for RSPA's pipeline safety advisory committees in determining the costs and benefits of potential changes to standards.
- Achieve balance between performance and prescriptive language.
- Develop performance measures to assess the effectiveness of corrosion control programs.
- Focus on managing corrosion to maintain pipeline integrity.
- Provide adequate regulatory flexibility to allow operators to implement alternative measures that meet the performance requirements of the corrosion regulations.

RSPA Concerns

Besides the guiding principles, the meetings with industry and state representatives have helped us evaluate the following concerns we have about the adequacy of the gas pipeline corrosion control standards. These concerns relate generally to the clarity of the standards, whether the standards are effective, whether they are consistent with modern practices, and whether they are in the interest of safety. The list does not include § 192.459, for which we have already proposed changes to deal with the problem of the extent of corrosion on exposed pipelines (Docket PS–107; 54 FR 27041; June 27, 1989). If we were to propose changes to Part 195 based on the corrosion control standards in Subpart I of Part 192, we would include in the proposal any changes that may be necessary to make Part 195 consistent with any changes made to § 192.459 in Docket PS–107.

The concerns stated below relate to the Subpart I standards in 49 CFR Part 192, which apply to metallic gas gathering, transmission, and distribution lines. As mentioned above, we are considering both the need to change these standards in response to the concerns and whether to apply the standards, with or without changes, to hazardous liquid pipelines subject to 49 CFR Part 195.

Personnel Qualification (§ 192.453)

- In view of the proposed rules on qualification of pipeline personnel (63 FR 57269; Oct. 27, 1998), are more specific qualification standards needed for individuals who direct or carry out corrosion control procedures? (The proposed rules apply to personnel doing regulated operation and maintenance tasks, including corrosion control, on regulated pipeline facilities. However, the proposed rules do not apply to management personnel who may oversee but not perform corrosion-related tasks on a pipeline.)

External Corrosion: New Pipelines (§ 192.455)

- Should a cathodic protection system be installed on offshore pipelines in less than 1 year after the pipeline is constructed, for example, 60 days, because of the strong corrosiveness of salt water?
- Is it in the interest of safety to exempt pipelines in particular environments and temporary pipelines from the coating and cathodic protection requirements?

External Corrosion: Existing Pipelines (§ 192.457)

- Should existing compressor, regulator, and measuring station piping continue to be excluded from the requirement to cathodically protect effectively coated transmission line pipe?
- Is the present requirement to cathodically protect certain older existing pipelines only in areas of ''active corrosion'' adequate for public safety? If not, what would be a cost effective alternative standard?
- Is the meaning of ''active corrosion'' clear and technically sound? If not, how should it be changed?

External Corrosion: Coating (§ 192.461)

- Should the implicit requirement to coat field joints and repairs be expressly stated? Does coating need to be compatible with the anticipated service conditions, including the effects of temperature?
- For offshore pipelines, during installation, are special measures necessary to protect against damage to coating, including field joint coating; and, to avoid mechanical damage, are special coatings needed on J-tubes, I-tubes and pipelines installed by the bottom tow method?

External Corrosion: Cathodic Protection Criteria (§ 192.463)

- Are the cathodic protection system criteria in Appendix D of Part 192, 300 mV shift and E-log-I, obsolete, since they are not in NACE Standard RP0169–96? If so, should operators be allowed to continue to use them on existing pipe, but not new pipe?

External Corrosion: Monitoring (§ 192.465)

- Does the sampling basis prescribed for inspecting short sections of main or transmission lines not in excess of 100 feet and separately protected service lines provide effective corrosion control, particularly as it applies to service lines that supply gas to public buildings?

External Corrosion: Electrical Isolation (§ 192.467)

- What remedial action is needed when an electrical short in a casing results in inadequate cathodic protection of the pipeline outside the casing?
- Should newly constructed offshore pipelines be electrically isolated from bare steel platforms unless both are protected as a single unit?
- Is electrical isolation needed where contact with aboveground structures would adversely affect cathodic protection?

External Corrosion: Test Leads (§ 192.471)

- Are accessible test leads needed on offshore risers that are electrically isolated and not accessible for testing?

• For aluminum pipelines, should all test leads be insulated aluminum conductors and installed to avoid harm to the pipe?

External Corrosion: Interference Currents (§ 192.473)

• Where light rail systems exist, should operators specifically be required to identify and test for stray currents and keep records of the test results?

Internal Corrosion (§ 192.475)

• Are special requirements needed to deal with the problem of internal corrosion in storage field piping, as evidenced by piping leaks in West Virginia and several Midwestern states?

Atmospheric Corrosion: General (§ 192.479)

• Should new and existing pipelines be subject to the same protection requirements?

• Is protection needed where corrosion is a light surface oxide or where corrosion will not likely affect the safe operation of the pipeline before the next scheduled inspection?

• Is special protection needed in the splash zone of offshore pipelines and at soil to air interfaces of onshore pipelines?

Atmospheric Corrosion: Monitoring (§ 192.481)

• Should the inspection interval for onshore pipelines be extended beyond 3 years in view of the generally low incidence of serious problems on protected pipelines?

• For onshore pipelines, are more frequent inspections needed at soil to air interfaces, under thermal insulation, at disbonded coatings, and at pipe supports?

• For offshore pipelines, are more frequent inspections needed under poorly bonded coatings and at splash zones, support clamps, and deck penetrations?

Records (§ 192.491)

• Should operators keep records of findings of non-corrosive conditions if § 192.455 is changed to remove the benefit of such findings?

• Is the period for keeping corrosion control monitoring records, ''as long as the pipeline remains in service,'' necessary for safety or accident investigation? If not, what is an appropriate period?

Concerns of Others

National Association of Pipeline Safety Representatives (NAPSR).

Long before the Oakbrook meeting, NAPSR reported on an extensive review of Part 192 that included recommendations to change several of the standards for corrosion control. We published the report and requested public comment on its various recommended rule changes (Docket PS–124, Notice 2; 58 FR 59431, Nov. 9, 1993). We adopted one of NAPSR's corrosion standard recommendations (regarding § 192.475) in the final rule we published in Docket PS–124 (61 FR 28770; June 6, 1996). The others are discussed below:

• With regard to §§ 192.457 and 192.465, NAPSR recommended changes to clarify the meaning of ''electrical survey'' and where alternatives to electrical surveys may be used. But most commenters either opposed or wanted to modify the recommendation, feeling it would unreasonably limit an operator's ability to determine areas of active corrosion by alternative methods.

• With regard to § 192.459, NAPSR recommended we require operators to record the condition of protective coatings whenever they inspect exposed portions of buried pipelines, arguing the records would provide a useful history of the condition of the pipelines as well as evidence that exposed pipe had been inspected as required. Opponents argued the recommendation was unnecessary because § 192.491 already requires operators to keep records of required inspections.

• With regard to § 192.467(c), NAPSR recommended changes to require that operators annually test pipeline casings for electrical isolation, and to clarify what ''other measures'' must be taken to minimize pipeline corrosion if isolation is not achieved. There was strong opposition to this recommendation because studies have not correlated shorted casings and corrosion on the carrier pipe, or because a longer interval of inspection would be more appropriate.

• With regard to § 192.479(b), NAPSR recommended that regardless of the date of installation, all aboveground pipelines or portions of a pipeline that are exposed to the atmosphere be cleaned and either coated or jacketed with a material suitable for the prevention of atmospheric corrosion, unless the pipeline is in a non-corrosive atmosphere. Commenters who objected to this recommendation said the difficulty of proving a non-corrosive atmosphere could cause operators to coat older pipelines that have no harmful atmospheric corrosion.

• With regard to the provision in § 192.487(a) that permits the repair rather than replacement of pipe with a small area of general corrosion, NAPSR recommended that the provision refer to generally accepted guidelines for determining what corroded areas may be repaired. Although most commenters opposed the idea of requiring operators to apply the guidelines in every case, there was no objection to making the guidelines permissive as § 192.485 does.

• Finally, with regard to § 192.489(b), NAPSR recommended that we clarify that internal sealing is not an appropriate method of strengthening graphitized pipe. There was no opposition to this recommendation.

Gas Piping Technology Committee (GPTC)

In an April, 1995 rulemaking petition, GPTC requested the following:

• Remove from § 192.467 the requirement that pipe be electrically isolated from metallic casings. GPTC argued there are no safety benefits from clearing shorted casings.

• Amend §§ 192.465 and 192.481 to allow operators to take up to 39 months to carry out inspections of unprotected pipelines that must be done at 3-year intervals. GPTC said the extra time would add flexibility to the standards with no reduction in safety.

National Transportation Safety Board (NTSB)

As a result of a recent accident investigation, NTSB recommended two changes to the Part 195 corrosion standards:

• Revise Part 195 to require pipeline operators to determine the condition of pipeline coating whenever pipe is exposed and, if degradation is found, to evaluate the coating condition of the pipeline. (P–98–35)

• Revise Part 195 to include performance measures for the adequate cathodic protection of liquid pipelines. (P–98–36)

We will be considering all these recommendations in the present proceeding as we decide what changes, if any, to propose for the corrosion control standards.

Alternatives

Changing the current standards to satisfy the concerns discussed above may not be the only way to improve protection against corrosion. Some industry representatives have expressed a desire to employ new technologies or risk management concepts as more advanced solutions to corrosion

problems. So we are considering the following as alternatives to some or all of the standards:

• Corrosion Management Plans. Our experience shows that many operators get superior results by applying their own pipeline-specific plans for controlling corrosion. These plans often contain methods and corrosion management techniques not required by the standards. To encourage the development and use of these plans, we are considering whether to allow operators to comply with corrosion management plans as an alternative to the corrosion control standards. While we think such plans would have to meet the objectives of the standards if not the specifics, this regulatory approach would give operators more flexibility to tailor their corrosion control practices to meet varying conditions. Such plans would be subject to review by agency inspection personnel and possible change if deemed inadequate (49 CFR 190.237).

• NACE Standard RP0169–96. Another alternative to compliance with the standards that some persons may favor is incorporation by reference of all or part of NACE Standard RP0169–96. Although its advisory style affects the suitability of this NACE standard for regulatory use, it is, nonetheless, widely accepted as the most authoritative source of up-to-date pipeline corrosion control practices. In an analogous situation, we have recently proposed to incorporate by reference other industry documents that are drafted in an advisory style. In the proceeding on the safety of breakout of tanks, we proposed to reference four documents published by the American Petroleum Institute that are recommended practices: API Recommended Practice 651 ''Cathodic Protection of Aboveground Petroleum Storage Tanks,'' API Recommended Practice 652 ''Lining of Aboveground Petroleum Storage Tanks Bottoms,'' API Recommended Practice 2003 ''Protection Against Ignitions Arising out of Static, Lightning, and Stray Currents,'' and API Recommended Practice 2350 ''Overfill Protection for Storage Tanks In Petroleum Facilities'' (Docket RSPA–97–2095; 63 FR 27903; May 21, 1998). Recognizing that API intended these documents to be advisory and not imperative, we proposed that operators follow the recommended practices unless they note in their procedural manuals why compliance with all or certain provisions is not necessary for the safety of a particular breakout tank or tanks. Any decisions not to follow certain provisions would be subject to review by agency inspection personnel and possible change if deemed inadequate (49 CFR 190.237). We could take a similar approach with respect to advisory provisions of NACE Standard RP0169–96 that operators may decide are unnecessary for the safety of particular pipelines.

Compliance Manual

We are also considering developing a Compliance Manual that would contain guidelines for federal and state inspectors in evaluating operator compliance with the corrosion standards. The manual would be available to the public, so operators could learn what inspectors look for in checking for compliance. We expect the manual to include explanations and illustrations that apply the standards to hypothetical pipelines, accounting for variations in operating conditions. For example, we plan to include details on how to perform field pipe-to-soil measurements, including connection of leads to the pipeline, voltmeter, and half cell. We also want to show how to apply the different cathodic protection criteria, and how to do a close-interval survey. We think such a manual would advance an effective and uniform understanding, interpretation, and application of the standards. It could also provide a basis for training government and operator personnel.

Public Participation

As stated in more detail above, interested persons are invited to attend the San Antonio public meeting and present oral or written statements about any of the principles, concerns, or alternatives discussed in this notice. Written statements not presented at the meeting may be submitted to the docket. If necessary, we may limit the time for oral presentations so that everyone who requests an opportunity to speak may do so. Those who do not request time for presentations may have an opportunity to speak as time allows.

We are particularly interested in receiving comments on the following:

1. Whether any existing standards deter or disallow the use of new technologies, and, if so, how.

2. The costs and benefits of any suggested changes to standards and alternatives to standards.

3. The amount of time operators may need to prepare for compliance with any suggested standards or alternatives.

4. With regard to the Corrosion Management Plan and NACE Standard alternatives—

a. The bases for evaluating the adequacy of corrosion management plans.

b. The best way to facilitate agency review of operator decisions under the alternatives (e.g., prior notification, reporting, recordkeeping).

c. Whether NACE Standard RP0169–96 is adequate for pipeline corrosion control and, if so, should we incorporate it by reference in our corrosion control standards?

5. For hazardous liquid pipelines—

a. Whether additional standards are needed to further reduce the possibility of damage to environmentally sensitive areas.

b. If Subpart I standards were applied to hazardous liquid pipelines, the changes, if any, that would be needed to account for differences between gas and liquid pipelines.

6. For gas distribution systems—

a. Root causes of corrosion leaks on coated, uncoated, protected, and unprotected metallic lines.

b. Descriptions of operating/maintenance practices to minimize corrosion leaks on cathodically unprotected lines.

c. Descriptions of risk-based corrosion management programs.

d. The best approach to monitoring corrosion control in urban wall-to-wall paved areas.

7. The amount of buried piping at compressor, regulator, and measuring stations that is not cathodically protected.

8. Explicit examples of adequate compliance with particular standards that have had varied interpretations.

9. To provide an acceptable level of safety on existing pipelines, must cathodic protection preserve the pipeline indefinitely or merely slow the rate of corrosion until the pipeline has to be rehabilitated or replaced?

Authority: 49 U.S.C. Chapter 601 and 49 CFR 1.53.

Richard B. Felder,

Associate Administrator for Pipeline Safety.

[FR Doc. 99–8628 Filed 4–6–99; 8:45 am]

BILLING CODE 4910–60–P

DEPARTMENT OF THE INTERIOR

Fish and Wildlife Service

50 CFR Part 17

RIN 1018–AB88

Endangered and Threatened Wildlife and Plants; Reopening of Public Comment Period, Notice of Public Hearing, and Notice of Availability of Documents Associated With Proposed Designation of Critical Habitat for the Rio Grande Silvery Minnow

AGENCY: Fish and Wildlife Service, Interior.

ACTION: Proposed rule; reopening of comment period, notice of public hearing, and notice of availability of draft documents.

SUMMARY: The Fish and Wildlife Service provides notice that the public comment period on the proposal to designate critical habitat for the Rio Grande silvery minnow (*Hybognathus amarus*), an endangered species, is reopened. We anticipate that public interest in the proposal to designate critical habitat will be high. Thus, we have scheduled a public hearing to be held in Albuquerque, New Mexico (see **DATES** and **ADDRESSES**). The reopening of the comment period will allow all interested parties to submit comments on the proposal, the draft Economic Analysis, and the draft Environmental Assessment prepared for the designation, which are now available (see **ADDRESSES**). We are seeking comments or suggestions from the public, other concerned governmental agencies, the scientific community, industry, or any other interested parties concerning the proposed designation and the draft documents.

DATES: The comment period for this proposal is now reopened and will close on May 7, 1999. All comments on the proposal, the draft Economic Analysis, and draft Environmental Assessment will be accepted through May 7, 1999. A public hearing on the proposal and the draft documents is scheduled for April 29, 1999 from 6:30 p.m. to 9:00 p.m.

ADDRESSES: Written comments and materials should be sent to the Field Supervisor, New Mexico Ecological Services Field Office, 2105 Osuna NE, Albuquerque, New Mexico 87113. Copies of the draft documents are also available from the Field Office. Comments and materials received will be available for public inspection during normal business hours, by appointment, at the above address. The public hearing will be held at the Indian Pueblo Cultural Center, 2401 12th Street NW, Albuquerque, New Mexico.

FOR FURTHER INFORMATION CONTACT: Jennifer Fowler-Propst, Field Supervisor, New Mexico Ecological Services Field Office, at the above address 505–346–2525.

SUPPLEMENTARY INFORMATION:

Background

The Fish and Wildlife Service proposed to list the Rio Grande silvery minnow as an endangered species with critical habitat on March 1, 1993 (58 FR 11821). The public comment period, originally scheduled to close on April 30, 1993, was extended until August 25, 1993, (58 FR 19220; April 13, 1993) to conduct public hearings and allow submission of additional comments. Public hearings were held in Albuquerque and Socorro, New Mexico, on the evenings of April 27 and 28, 1993, respectively.

We published the final rule to list the Rio Grande silvery minnow on July 20, 1994 (59 FR 36988). At that time, we found that critical habitat was not determinable because there was insufficient information to perform required analyses of the impacts of the designation. We contracted an economic analysis of the designation in September 1994; the draft analysis was provided to us in February, 1996 and we transmitted it to all interested individuals on April 26, 1996. We notified the public that, because of the moratorium on final listing actions and determinations of critical habitat imposed by Public Law 104–6, no work would be conducted on the analysis or on the final decision concerning critical habitat. However, we solicited comments from the public and agencies for use when such work resumed.

On February 22, 1999, the United States District Court for the District of New Mexico, in *Forest Guardians and Defenders of Wildlife* v. *Bruce Babbitt,* CIV 97–0453 JC/DIS, ordered us to publish a final determination with regard to critical habitat for the Rio Grande silvery minnow within 30 days of that order. Subsequently, on March 22, 1999, the Court ordered that we would be allowed an additional 90 days for the final designation. The current deadline is for publication of the final determination by June 23, 1999.

The Fish and Wildlife Service is using the extension granted by the Court to seek public input to the process of designating critical habitat. Comments on the draft Economic Analysis and draft Environmental Assessment will be considered in our final determination of critical habitat. Written comments we have already received on the draft Economic Analysis in 1996 have been retained and will be considered during this open comment period.

Author: The primary author of this document is Jennifer Fowler-Propst, New Mexico Ecological Services Field Office (see *ADDRESSES* section).

Authority

The authority for this action is the Endangered Species Act (16 U.S.C. 1532 *et seq.*).

Dated: March 30, 1999.

David Yazzie,

Acting Regional Director, Fish and Wildlife Service.

[FR Doc. 99–8208 Filed 4–6–99; 8:45 am]

BILLING CODE 4310–55–P

DEPARTMENT OF THE INTERIOR

Fish and Wildlife Service

50 CFR Part 17

RIN 1018–AF33

Endangered and Threatened Wildlife and Plants; Notice of Public Hearing and Extension of Comment Period on the Proposed Rule for Listing Nine Bexar County, Texas Invertebrates as Endangered.

AGENCY: Fish and Wildlife Service, Interior.

ACTION: Proposed rule; notice of extension of comment period and announcement of public hearing.

SUMMARY: The U.S. Fish and Wildlife Service gives notice that the public comment period is extended and a public hearing will be held on the proposed determination of endangered status for nine Bexar County invertebrates. The species proposed for listing (63 FR 71855; December 30, 1998) are *Rhadine exilis* (no common name) and *Rhadine infernalis* (no common name), small, essentially eyeless ground beetles; *Batrisodes venyivi* (Helotes mold beetle), a small, eyeless mold beetle; *Texella cokendolpheri* (Robber Baron Cave harvestman), a small, eyeless harvestman (daddy-longlegs); *Cicurina baronia* (Robber Baron cave spider), *Cicurina madla* (Madla's cave spider), *Cicurina venii* (no common name), *Cicurina vespera* (vesper cave spider), and *Neoleptoneta microps* (Government Canyon cave spider), all small eyeless, or essentially eyeless, spiders. All interested parties are invited to submit comments on this proposal.

DATES: A public hearing will be held from 7:30 p.m. to 9:00 p.m. on April 20, 1999 in San Antonio, Texas. Information displays and an opportunity to ask questions will be available from 5:30 to 7:00 p.m. on April 20, 1999. The extended comment period closes May 31, 1999.

ADDRESSES: The public hearing and information displays will be held at the Lee High School cafeteria located at 1400 Jackson Keller Road in San Antonio, Texas. Written comments and materials concerning the proposal should be sent to the Field Supervisor, U.S. Fish and Wildlife Service, Ecological Services, 10711 Burnet Road, Suite 200, Austin, Texas 78758–4460. Comments and materials received will be available for public inspection by appointment during normal business hours at the above address.

FOR FURTHER INFORMATION CONTACT: Alisa Shull, U.S. Fish and Wildlife Service (see **ADDRESSES** section) (telephone 512–490–0057: facsimile 512–490–0974).

SUPPLEMENTARY INFORMATION:

Background

These nine invertebrates are obligate cave-dwelling species (troglobites) of local distribution in caves in northern Bexar County, Texas. The life habits of the species are not well known. They are probably predaceous on the eggs, larvae, or adults of other cave invertebrates.

Threats to these species and their habitats include destruction and/or deterioration of habitat by commercial, residential, and road construction; filling of caves, and loss of permeable cover; potential contamination from such things as septic effluent, sewer leaks, run-off, and pesticides; predation by and competition with non-native fire ants; and vandalism.

In 1994 we began discussions with a coalition of landowners, developers, and other interested parties about creating a conservation agreement that might preclude the need for listing these species. We have been working since then with interested parties to develop a conservation strategy and agreement. However, all the details necessary to accomplish this goal have not yet been agreed to. These issues relate primarily to determining what is needed for species conservation, responsibility and commitment for implementation and funding, and the amount of time required to implement the conservation measures. If these issues are resolved before a final listing decision is made, the final listing decision may differ from that proposed for some or all of these species.

Public hearings are designed to gather relevant information the public may have that we should consider in determining the status of and threats to these species. During the hearing the Service will present information about the proposed action of listing the nine Bexar County invertebrates as endangered. We invite the public to submit information and comments either at the hearing on April 20, 1999, or in writing. We request that comments be as specific as possible.

This hearing will be held from 7:30 to 9:00 pm. In the event there are a large number of people who wish to comment, the time allotted for oral statements may have to be limited. Persons wishing to comment at the hearing are encouraged to provide a written copy of their statement at the start of the hearing. There is no limit on the length of written comments. Written comments may also be submitted at any time during the open comment period and are given equal consideration to oral comments. Written comments should be sent to: Supervisor, USFWS, 10711 Burnet Road, Suite 200, Austin, Texas 78758, and must be received by May 31, 1999.

From 5:30 to 7:00 p.m., prior to the public hearing, several information booths will be set up at the hearing site (see **ADDRESSES**) to allow the public to gather information and ask questions. The best time to ask questions or discuss issues will be from 5:30 to 7:00 p.m. at the information displays. Although the Service will present information at the beginning of the hearing about the proposed action of listing the nine Bexar County invertebrates as endangered, the format of the hearing will not allow for questions and answers or two-way dialogue during the hearing.

Additional information that would be particularly useful to the Service in making a final listing determination includes any additional biological data; the location of any additional caves containing these species or caves where searches have been conducted and the species not found; areas planned for development or other activities that might affect any of the nine invertebrates; and existing local, state, or Federal regulations that provide protection for these species and their habitat.

Author: The primary author of this notice is Christina Longacre (see **ADDRESSES** section) (telephone 512/490–0057: facsimile 512/490–0974).

Authority

The authority for this action is the Endangered Species Act of 1973 as amended (16 U.S.C. 1531 *et seq.*).

Dated: March 29, 1999.

Nancy M. Kaufman,

Regional Director, Fish and Wildlife Service.

[FR Doc. 99–8678 Filed 4–5–99; 11:55 am]

BILLING CODE 4310–55–P

DEPARTMENT OF COMMERCE

National Oceanic and Atmospheric Administration

50 CFR Part 648

[Docket No. 990301058–9058–01; I.D. 011499B]

RIN 0648–AL56

Fisheries of the Northeastern United States; Amendment 12 to the Fishery Management Plan for the Summer Flounder, Scup, and Black Sea Bass Fisheries; Amendment 8 to the Fishery Management Plan for the Atlantic Mackerel, Squid, and Butterfish Fisheries; and Amendment 12 to the Fishery Management Plan for the Atlantic Surf Clam and Ocean Quahog Fisheries

AGENCY: National Marine Fisheries Service (NMFS), National Oceanic and Atmospheric Administration (NOAA), Commerce.

ACTION: Proposed rule; request for comments.

SUMMARY: NMFS proposes regulations to implement Amendment 12 to the Fishery Management Plan (FMP) for the Summer Flounder, Scup, and Black Sea Bass Fisheries; Amendment 8 to the FMP for the Atlantic Mackerel, Squid, and Butterfish Fisheries; and Amendment 12 to the FMP for the Atlantic Surf Clam and Ocean Quahog Fisheries. This proposed rule would implement framework provisions for amending management measures for these fisheries, restrict the size of domestic harvesting vessels permitted in the Atlantic mackerel fishery without restricting the size of processing vessels, and implement an operator permit requirement for the surf clam and ocean quahog fisheries. These amendments are intended to meet the requirements of the Sustainable Fisheries Act of October 1996 (SFA).

DATES: Comments must be received on or before May 24, 1999.

ADDRESSES: Comments on this proposed rule should be sent to Jon C. Rittgers, Acting Regional Administrator,

Northeast Regional Office, NMFS, One Blackburn Drive, Gloucester, MA 01930. Mark the outside of the envelope ''Comments on the Mid-Atlantic SFA Amendments.''

Comments regarding burden-hour estimates for collection-of-information requirements contained in this proposed rule should be sent to the Office of Information and Regulatory Affairs, Office of Management and Budget (OMB), Washington, DC 20503 (Attention: NOAA Desk Officer).

Copies of the proposed amendments, the environmental assessments (EA), the regulatory impact reviews, and other supporting documents are available from Daniel Furlong, Executive Director, Mid-Atlantic Fishery Management Council, Room 2115 Federal Building, 300 S. New Street, Dover, DE 19904-6790.

FOR FURTHER INFORMATION CONTACT: Regina L. Spallone, Fishery Policy Analyst, 978–281–9221.

SUPPLEMENTARY INFORMATION: The Mid-Atlantic Fishery Management Council (Council) and the Atlantic States Marine Fisheries Commission, in consultation with the New England and South Atlantic Fishery Management Councils, prepared proposed Amendment 12 to the Summer Flounder, Scup, and Black Sea Bass FMP. The Council, in consultation with the New England and South Atlantic Fishery Management Councils, prepared proposed Amendment 8 to the Atlantic Mackerel, Squid, and Butterfish FMP. The Council, in consultation with the New England Fishery Management Council, prepared proposed Amendment 12 to the Atlantic Surf Clam and Ocean Quahog FMP.

NMFS published a notice of availability for these amendments in the **Federal Register** on January 27, 1999 (64 FR 4065), soliciting public comments on the three amendments through March 29, 1999. All comments received by the end of that comment period on the proposed amendments, whether specifically directed to any of the amendments or to this proposed rule, will be considered in the approval/disapproval decision on the amendments. Public comments must be received (not postmarked or otherwise transmitted, including faxes) by the close of business on March 29, 1999, to be considered in the approval/disapproval decision. Comments received after that date, but before the end of the comment period for this proposed rule May 24, 1999, will not be considered in the approval/disapproval decision of the amendments, but will be considered in the decision on issuance of the final rule.

Overfishing Definition

All three of the FMP amendments would revise the overfishing definitions to bring them into accord with the new national standards of the Magnuson-Stevens Fishery Conservation and Management Act of 1976 (Magnuson-Stevens Act), as amended by the SFA. Under the revised standards, overfishing definitions must be composed of two reference points, one for fishing mortality and one for stock biomass. ''Overfishing'' occurs whenever a stock or stock complex is subjected to a rate or level of F that jeopardizes the capacity of a stock or stock complex to produce maximum sustainable yield (MSY) on a continuing basis. ''Overfished'' describes a stock or stock complex with a sufficiently low biomass to require a change in management practices to achieve the appropriate level or rate of stock rebuilding (to B_{target}).

Only one change to the regulatory text is necessary because of the new overfishing definitions. Amendment 8 to the Atlantic Mackerel, Squid, and Butterfish FMP (Amendment 8) proposes to revise the maximum fishing mortality rate for *Illex* squid to F_{msy} to better reflect the goal of achieving MSY on a continuing basis. The other proposed FMP amendments do not require changes to the regulatory text. Comments on these FMP amendments were solicited in the Notice of Availability (64 FR 4065).

Framework Adjustment Process

The proposed amendments would add a framework adjustment process for each of the fisheries, in addition to the annual specification setting process. This provision would allow the Council to modify or add management measures through a streamlined public review process. As such, management measures that have been identified in the plan could be implemented or adjusted at any time during the year. The following management measures could be implemented or modified through framework adjustment procedures for Amendments 12 and 8 (summer flounder, scup, black sea bass, Atlantic mackerel, *Loligo* and *Illex* squids, and butterfish fisheries) unless otherwise noted: Minimum and maximum fish sizes; gear restrictions; permitting restrictions; recreational possession and harvest limits and seasons; closed areas; commercial seasons and trip limits; commercial quota system, including commercial quota allocation procedure and possible quota set asides to mitigate bycatch; restrictions on vessel size in length overall and gross registered tons (LOA and GRT) or shaft horsepower; operator permits (summer flounder, scup, and black sea bass only); regional management and inseason adjustments to specifications (Atlantic mackerel, squid, and butterfish only) and any other management measures currently included in the FMP.

In addition, the following provisions could be implemented for the fisheries managed under all three FMPs, unless otherwise noted: Set aside quotas for scientific research; description and identification of essential fish habitat (EFH) and habitat areas of particular concern; management measures for fishing gear that impact EFH; overfishing definition thresholds and targets; vessel tracking system; and optimum yield range (surf clam and ocean quahogs only).

Other Proposed Measures

This proposed rule would restrict the size of domestic harvesting vessels, but not processing vessels, permitted in the Atlantic mackerel fishery. Any vessel that exceeds any one of the following: 165 ft (50.3 m) in LOA, or 750 GRT, or a shaft horsepower (shp) of 3,000, would be ineligible for a permit to harvest Atlantic mackerel. NMFS believes this proposed language describes clearly the intended effect of the measure, which is to exclude all vessels meeting any one of the three criteria.

NMFS is concerned that the wording of the regulation, as submitted by the Council, would not achieve the Council's intentions by allowing vessels to become eligible for a harvesting permit under various combinations of length, tonnage and horsepower. Based on the record of discussions at public Council meetings, this proposed rule would interpret the Council's action to mean adoption of the most restrictive interpretation of the criteria. NMFS is seeking comment on this interpretation which would prohibit harvesting of Atlantic mackerel by all vessels meeting any one of the preceding criteria. NMFS is also seeking comment on the overall merits of such a prohibition on harvesting vessels.

The Council is concerned about rapid over-capitalization of the mackerel fleet by the entry of large vessels with significant harvesting potential. The Council's analysis indicates that the current fleet of vessels in the Northeast has more than enough fishing harvesting capacity to take the sustainable harvest of Atlantic mackerel. This analysis can be reviewed in its entirety by obtaining a copy of Amendment 8 to the Atlantic

Mackerel, Squid, and Butterfish FMP (see **ADDRESSES**).

Because Amendment 8 proposes to prohibit only vessels that exceed the above specified limits from harvesting Atlantic mackerel and not from processing it, NMFS, to be consistent with the intent of the Council, proposes to modify the vessel and dealer permitting provisions to provide for processing by such vessels. Specifically, the vessel permit requirement would be revised to make vessels exceeding the size limits specified ineligible for a permit to harvest Atlantic mackerel. A new dealer permit category would be established to allow a vessel of any size to receive, possess and process Atlantic mackerel at sea, as well as to off-load the product. Such a vessel would be required to obtain an at-sea processing permit and comply with the dealer reporting requirements.

This proposed rule would implement, through Amendment 12 to the FMP for the Atlantic Surf Clam and Ocean Quahog Fisheries, the operator permit requirement for individuals fishing for surf clams or ocean quahogs. An operator is the master, captain, or other individual aboard a fishing vessel who is in charge of that vessel's operations. Under the proposed rule, any vessel fishing commercially for surf clams or ocean quahogs in the EEZ would have to have on board at least one operator who holds an operator permit issued pursuant to this FMP or any other FMP prepared by the Mid-Atlantic or the New England Fishery Management Councils. The operator may be held accountable for violations of the fishing regulations and may be subject to an operator permit sanction for violations. During the permit sanction period, the individual operator could not be aboard any federally permitted fishing vessel or any vessel subject to Federal fishing regulations while the vessel is at sea or engaged in off-loading.

Technical Changes

Effective February 1, 1991, NMFS closed the fishing grounds located east of 69° W. longitude, and south of 42°20' N. latitude to surf clam and ocean quahog harvesting (56 FR 3980, February 1, 1991). That area was closed to fishing for surf clams and ocean quahogs due to high concentrations of the organism that causes paralytic shellfish poisoning (PSP) currently found in these species at that location. The original notification specified that the area would remain closed until the Secretary of Commerce determines that the adverse environmental conditions caused by the PSP toxin are no longer present. Since that closure is still in effect, NMFS proposes to codify the closure so that new entrants into the fishery, and those who may not have been actively participating in the fishery since 1991, can be notified more easily of the closure and subsequent re-opening, should it occur.

Additionally, NMFS proposes to suspend the sea turtle conservation regulations codified at § 648.106. The measures implemented in Amendment 2 to the Summer Flounder, Scup, and Black Sea Bass FMP (57 FR 57358, December 4, 1992) were intended to serve a temporary function, pending implementation of permanent measures under the authority of the Endangered Species Act (ESA). Those regulations are now in place under 50 CFR parts 217 and 227. Regulations issued under the ESA supersede the regulations issued under part 648, which are proposed to be replaced with a cross reference to parts 217 and 227.

Classification

At this time, NMFS has not determined that the amendments that this proposed rule would implement are consistent with the national standards of the Magnuson-Stevens Act and other applicable law. NMFS, in making that determination, will take into account the data, views, and comments received during the comment period.

The Council prepared EAs for each of the amendments that discuss the impacts on the environment. Copies of the environmental assessments are available from the Council (see **ADDRESSES**).

This proposed rule has been determined to be significant for purposes of E.O. 12866.

The Chief Counsel for Regulation of the Department of Commerce certified to the Chief Counsel for Advocacy of the Small Business Administration that this proposed rule, if adopted, would not have a significant economic impact on a substantial number of small entities as follows:

Some of the provisions implemented by this rule, i.e., the revised overfishing definitions and the framework process, are not expected to impact participants in any of these fisheries. Consequently, these provisions would not change historical production or normal business practices associated with the fishery. For the operator permit provision, approximately 21 of the 84 vessels that landed surf clams or ocean quahogs in 1997 (25 percent) are operated by individuals who would be required to obtain that permit. These individuals would not already have a permit issued, as required by another fishery. Compliance costs associated with this requirement are estimated at $22 ($15 form preparation, plus $7 for passport photographs), to be incurred every 3 years only, since the permit is valid for that time. Therefore, it is realistic to assume that this cost would equate to but a small percentage of the annualized costs of the surf clam and quahog industry. The vessel size restriction is estimated to impact 1 of approximately 1,000 vessels that represent potential new entry into the directed mackerel fishery. As a result, a regulatory flexibility analysis was not prepared. Any changes in management provisions that arise as a result of the measures enacted by these amendments would be reviewed for economic impacts when submitted.

Notwithstanding any other provision of the law, no person is required to respond to, nor shall any person be subject to a penalty for failure to comply with, a collection of information subject to the requirements of the PRA, unless that collection of information displays a currently valid OMB control number.

This proposed rule contains collection-of-information requirements subject to the Paperwork Reduction Act. These collection-of-information requirements have been submitted to OMB for approval. The requirements and their estimated response times are: Operator permits at 1 hour per response, at-sea processor permits at 5 minutes per response, and weekly reporting for at-sea processors at 2 minutes to complete the dealer purchase report (Form 88–30), and 4 minutes to summarize and call-in the weekly IVR report. The response times shown include the time for reviewing instructions, searching existing data sources, gathering and maintaining the data needed, and completing and reviewing the collection of information.

Public comment is sought regarding whether these proposed collections-of-information are necessary for the proper performance of the functions of the agency, including whether the information has practical utility; the accuracy of the burden estimate; ways to enhance the quality, utility, and clarity of the information to be collected; and ways to minimize the burden of the collection-of-information, including through the use of automated collection techniques or other forms of information technology. Send comments regarding these burden estimates or any other aspect of the data requirements, including suggestions for reducing the burden, to NMFS (see **ADDRESSES**) and to the Office of Information and Regulatory Affairs, Office of Management and Budget, Washington, DC 20503 (ATTN: NOAA Desk Officer).

List of Subjects in 50 CFR Part 648

Fisheries, Fishing, Reporting and recordkeeping requirements.

Dated: March 31, 1999.

Rolland A. Schmitten,

Assistant Administrator for Fisheries, National Marine Fisheries Service.

For the reasons set out in the preamble, 50 CFR part 648 is proposed to be amended as follows:

PART 648—FISHERIES OF THE NORTHEASTERN UNITED STATES

1. The authority citation for part 648 continues to read as follows:

Authority: 16 U.S.C. 1801 *et seq.*

2. In § 648.4, paragraph (a)(5)(iii) is revised to read as follows:

§ 648.4 Vessel and individual commercial permits.

(a) * * *

(5) * * *

(iii) *Atlantic mackerel permit.* Any vessel of the United States may obtain a permit to fish for or retain Atlantic mackerel in or from the EEZ, except for vessels that exceed 165 feet in length overall (LOA), or 750 gross registered tons, or have shaft horsepower exceeding 3000 shp. Vessels that exceed the size restriction may obtain an at-sea processing permit specified under § 648.6(a)(2).

* * * * *

3. In § 648.5, paragraph (a) is revised to read as follows:

§ 648.5 Operator permits.

(a) *General.* Any operator of a vessel fishing for or possessing sea scallops in excess of 40 lb (18.1 kg), NE Multispecies, and, mackerel, squid, or butterfish, or scup, and, black sea bass, or, as of [insert effective date of the final rule], Atlantic surf clams and ocean quahog harvested in or from the EEZ, or issued a permit for these species under this part, must have been issued under this section and carry on board, a valid operator's permit.

* * * * *

4. In § 648.6, paragraph (a) is redesignated paragraph (a)(1) and a heading is added to newly redesignated paragraph (a)(1); a new paragraph (a)(2) is added; and a paragraph (c) is revised to read as follows:

§ 648.6 Dealer/processor permits.

(a) *General.* (1) *Dealer permits.* * * *

(2) *At-sea processors.* Notwithstanding the provisions of § 648.4(a)(5), any vessel of the United States must have been issued and carry on board a valid at-sea processor permit issued under this section to receive over the side, possess and process Atlantic mackerel harvested in or from the EEZ by a lawfully permitted vessel of the United States.

* * * * *

(c) *Information requirements.* Applications must contain at least the following information and any other information required by the Regional Administrator: Company name, place(s) of business (principal place of business if applying for a surf clam and ocean quahog permit), mailing address(es) and telephone number(s), owner's name, dealer permit number (if a renewal), name and signature of the person responsible for the truth and accuracy of the application, a copy of the certificate of incorporation if the business is a corporation, and a copy of the partnership agreement and the names and addresses of all partners, if the business is a partnership, name of at-sea processor vessel, and current vessel documentation papers, if an at-sea processor permit.

* * * * *

5. In § 648.7, the last two sentences of paragraph (c) are removed and paragraph (f)(3) is revised to read as follows:

§ 648.7 Recordkeeping and reporting requirements.

* * * * *

(f) * * *

(3) *At-sea purchasers, receivers, or processors.* All persons purchasing, receiving, or processing any summer flounder, or mackerel, or squid, or butterfish, or scup, or black sea bass at sea for landing at any port of the United States must submit information identical to that required by paragraph (a)(1), (a)(2), or (a)(3) of this section, as applicable, and provide those reports to the Regional Administrator or designee on the same frequency basis.

* * * * *

6. In § 648.14, paragraph (p)(10) is added to read as follows:

§ 648.14 Prohibitions.

* * * * *

(p) * * *

(10) Fish for, retain, or possess Atlantic mackerel in or from the EEZ with a vessel that exceeds 165 ft (50.3 m) in length overall, or 750 GRT, or 3000 shp, except for processing Atlantic mackerel by a vessel holding a valid at-sea processor permit pursuant to § 648.6(a)(2).

* * * * *

7. In § 648.20, paragraph (c) is revised to read as follows:

§ 648.20 Maximum optimum yield (OYs).

* * * * *

(c) *Illex*–catch associated with a fishing mortality rate of F_{msy}.

* * * * *

8. In § 648.21, paragraph (b)(2)(i) is revised to read as follows:

§ 648.21 Procedures for determining initial annual amounts.

* * * * *

(b) * * *.

(2) *Mackerel.* (i) Mackerel ABC must be calculated from the formula ABC = T - C, where C is the estimated catch of mackerel in Canadian waters for the upcoming fishing year and T is the catch associated with a fishing mortality rate that is equal to F_{target} (F= 0.25) at 890,000 mt spawning stock biomass (or greater) and decreases linearly to zero at 450,000 mt spawning stock biomass (½ B_{msy}).

* * * * *

9. Section 648.24 is added under subpart B to read as follows:

§ 648.24 Framework adjustments to management measures.

(a) *Within season management action.* The MAFMC, at any time, may initiate action to add or adjust management measures within the Atlantic Mackerel, Squid, and Butterfish FMP if it finds that action is necessary to meet or be consistent with the goals and objectives of the plan.

(1) *Adjustment process.* The MAFMC shall develop and analyze appropriate management actions over the span of at least two MAFMC meetings. The MAFMC must provide the public with advance notice of the availability of the recommendation(s), appropriate justification(s) and economic and biological analyses, and the opportunity to comment on the proposed adjustment(s) at the first meeting and prior to and at the second MAFMC meeting. The MAFMC's recommendations on adjustments or additions to management measures must come from one or more of the following categories: minimum fish size, maximum fish size, gear restrictions, gear requirements or prohibitions, permitting restrictions, recreational possession limit, recreational seasons, closed areas, commercial seasons, commercial trip limits, commercial quota system including commercial quota allocation procedure and possible quota set asides to mitigate bycatch, recreational harvest limit, annual specification quota setting process, FMP Monitoring Committee composition and process, description and identification of essential fish habitat (and fishing gear management measures that impact EFH), description and identification of habitat areas of particular concern,

overfishing definition and related thresholds and targets, regional gear restrictions, regional season restrictions (including option to split seasons), restrictions on vessel size (LOA and GRT) or shaft horsepower, any other management measures currently included in the FMP, set aside quota for scientific research, regional management, and process for inseason adjustment to the annual specification.

(2) *MAFMC recommendation*. After developing management actions and receiving public testimony, the MAFMC shall make a recommendation to the Regional Administrator. The MAFMC's recommendation must include supporting rationale, if management measures are recommended, an analysis of impacts, and a recommendation to the Regional Administrator on whether to issue the management measures as a final rule. If MAFMC recommends that the management measures should be issued as a final rule, MAFMC must consider at least the following factors, and provide support and analysis for each factor considered:

(i) Whether the availability of data on which the recommended management measures are based allows for adequate time to publish a proposed rule, and whether the regulations would have to be in place for an entire harvest/fishing season.

(ii) Whether there has been adequate notice and opportunity for participation by the public and members of the affected industry in the development of the recommended management measures.

(iii) Whether there is an immediate need to protect the resource.

(iv) Whether there will be a continuing evaluation of management measures following their implementation as a final rule.

(3) *Regional Administrator action*. If the MAFMC's recommendation includes adjustments or additions to management measures and, after reviewing the MAFMC's recommendation and supporting information:

(i) If the Regional Administrator concurs with MAFMC's recommended management measures and determines that the recommended management measures should be issued as a final rule based on the factors specified in paragraph (a)(2) of this section, the measures will be issued as a final rule in the **Federal Register**.

(ii) If the Regional Administrator concurs with MAFMC's recommended management measures and determines that the recommended management measures should be published first as a proposed rule, the measures will published as a proposed rule in the **Federal Register**. After additional public comment, if the Regional Administrator concurs with the MAFMC recommendation, the measures will be issued as a final rule in the **Federal Register**.

(iii) If the Regional Administrator does not concur, MAFMC will be notified in writing of the reasons for the non-concurrence.

(4) *Emergency actions*. Nothing in this section is meant to derogate from the authority of the Secretary to take emergency action under section 305(e) of the Magnuson-Stevens Act.

(b) [Reserved]

10. In § 648.73, paragraph (a)(4) is added to read as follows:

§ 648.73 Closed areas.

(a) * * *

(4) *Georges Bank*. The paralytic shellfish poisoning (PSP) contaminated area known as Georges Bank and located east of 69° W. longitude, and south of 42°20' N. latitude.

* * * * *

11. Section 648.77 under Subpart E is added to read as follows:

§ 648.77 Framework adjustments to management measures.

(a) *Within season management action*. At any time, MAFMC may initiate action to add or adjust management measures within the Atlantic Surf Clam and Ocean Quahog FMP if it finds that action is necessary to meet or be consistent with the goals and objectives of the plan.

(1) *Adjustment process*. MAFMC shall develop and analyze appropriate management actions over the span of at least two MAFMC meetings. MAFMC must provide the public with advance notice of the availability of the recommendation(s), appropriate justification(s) and economic and biological analyses, and the opportunity to comment on the proposed adjustment(s) at the first meeting, and prior to and at the second MAFMC meeting. The MAFMC's recommendations on adjustments or additions to management measures must come from one or more of the following categories: The overfishing definition (both the threshold and target levels) description and identification of EFH (and fishing gear management measures that impact EFH), habitat areas of particular concern, set aside quota for scientific research, vessel tracking system, optimum yield range.

(2) *MAFMC recommendation*. After developing management actions and receiving public testimony, MAFMC shall make a recommendation to the Regional Administrator. MAFMC's recommendation must include supporting rationale, if management measures are recommended, an analysis of impacts, and a recommendation to the Regional Administrator on whether to issue the management measures as a final rule. If MAFMC recommends that the management measures should be issued as a final rule, it must consider at least the following factors, and provide support and analysis for each factor considered:

(i) Whether the availability of data on which the recommended management measures are based allows for adequate time to publish a proposed rule, and whether the regulations would have to be in place for an entire harvest/fishing season.

(ii) Whether there has been adequate notice and opportunity for participation by the public and members of the affected industry in the development of recommended management measures.

(iii) Whether there is an immediate need to protect the resource.

(iv) Whether there will be a continuing evaluation of management measures adopted following their implementation as a final rule.

(3) *Regional Administrator action*. If MAFMC's recommendation includes adjustments or additions to management measures and, after reviewing MAFMC's recommendation and supporting information:

(i) If the Regional Administrator concurs with the MAFMC's recommended management measures and determines that the recommended management measures should be issued as a final rule based on the factors specified in paragraph (a)(2) of this section, the measures will be issued as a final rule in the **Federal Register**.

(ii) If the Regional Administrator concurs with the MAFMC's recommended management measures and determines that the recommended management measures should be published first as a proposed rule, the measures will be published as a proposed rule in the **Federal Register**. After additional public comment, if the Regional Administrator concurs with the MAFMC recommendation, the measures will be issued as a final rule and published in the **Federal Register**.

(iii) If the Regional Administrator does not concur, MAFMC will be notified in writing of the reasons for the non-concurrence.

(4) *Emergency actions*. Nothing in this section is meant to derogate from the authority of the Secretary to take emergency action under section 305(e) of the Magnuson-Stevens Act.

(b) [Reserved]

12. Section 648.107 is added under Subpart G to read as follows:

§ 648.107 Framework adjustments to management measures.

(a) *Within season management action*. MAFMC, at any time, may initiate action to add or adjust management measures within the Summer Flounder, Scup, and Black Sea Bass FMP if it finds that action is necessary to meet or be consistent with the goals and objectives of the plan.

(1) *Adjustment process*. MAFMC shall develop and analyze appropriate management actions over the span of at least two MAFMC meetings. MAFMC must provide the public with advance notice of the availability of the recommendation(s), appropriate justification(s) and economic and biological analyses, and the opportunity to comment on the proposed adjustment(s) at the first meeting and prior to and at the second MAFMC meeting. MAFMC's recommendations on adjustments or additions to management measures must come from one or more of the following categories: Minimum fish size, maximum fish size, gear restrictions, gear requirements or prohibitions, permitting restrictions, recreational possession limit, recreational seasons, closed areas, commercial seasons, commercial trip limits, commercial quota system including commercial quota allocation procedure and possible quota set asides to mitigate bycatch, recreational harvest limit, annual specification quota setting process, FMP Monitoring Committee composition and process, description and identification of essential fish habitat (and fishing gear management measures that impact EFH), description and identification of habitat areas of particular concern, overfishing definition and related thresholds and targets, regional gear restrictions, regional season restrictions (including option to split seasons), restrictions on vessel size (LOA and GRT) or shaft horsepower, operator permits, any other commercial or recreational management measures, any other management measures currently included in the FMP, and set aside quota for scientific research.

(2) *MAFMC recommendation*. After developing management actions and receiving public testimony, MAFMC shall make a recommendation to the Regional Administrator. MAFMC's recommendation must include supporting rationale, if management measures are recommended, an analysis of impacts, and a recommendation to the Regional Administrator on whether to issue the management measures as a final rule. If MAFMC recommends that the management measures should be issued as a final rule, it must consider at least the following factors and provide support and analysis for each factor considered:

(i) Whether the availability of data on which the recommended management measures are based allows for adequate time to publish a proposed rule, and whether the regulations would have to be in place for an entire harvest/fishing season.

(ii) Whether there has been adequate notice and opportunity for participation by the public and members of the affected industry in the development of recommended management measures.

(iii) Whether there is an immediate need to protect the resource.

(iv) Whether there will be a continuing evaluation of management measures adopted following their implementation as a final rule.

(3) *Regional Administrator action*. If MAFMC's recommendation includes adjustments or additions to management measures and, if after reviewing the MAFMC's recommendation and supporting information:

(i) The Regional Administrator concurs with the MAFMC's recommended management measures and determines that the recommended management measures should be issued as a final rule based on the factors specified in paragraph (a)(2) of this section, the measures will be issued as a final rule in the **Federal Register**.

(ii) If the Regional Administrator concurs with the MAFMC's recommended management measures and determines that the recommended management measures should be published first as a proposed rule, the measures will be published as a proposed rule in the **Federal Register**. After additional public comment, if the Regional Administrator concurs with the MAFMC recommendation, the measures will be issued as a final rule and published in the **Federal Register**.

(iii) If the Regional Administrator does not concur, the MAFMC will be notified in writing of the reasons for the non-concurrence.

(4) *Emergency actions*. Nothing in this section is meant to derogate from the authority of the Secretary to take emergency action under section 305(e) of the Magnuson-Stevens Act.

(b) [Reserved]

13. Section 648.127 is added under Subpart H to read as follows:

§ 648.127 Framework adjustments to management measures.

(a) *Within season management action*. See § 648.107(a).

(1) *Adjustment process*. See § 648.107(a)(1).

(2) *MAFMC recommendation*. See § 648.107(a)(2)(i) to (iv).

(3) *Regional Administrator action*. See § 648.107(a)(i) through (iii).

(4) *Emergency actions*. See § 648.107(a)(4).

(b) [Reserved]

14. Section 648.147 is added under Subpart I to read as follows:

§ 648.147 Framework adjustments to management measures.

(a) *Within season management action*. See § 648.107(a).

(1) *Adjustment process*. See § 648.107(a)(1).

(2) *MAFMC recommendation*. See § 648.107(a)(2)(i) through (iv).

(3) *Regional Administrator action*. See § 648.107(a)(i) through (iii).

(4) *Emergency actions*. See § 648.107(a)(4).

(b) [Reserved]

[FR Doc. 99–8470 Filed 4–6–99; 8:45 am]

BILLING CODE 3510–22–F

Notices

Federal Register
Vol. 64, No. 66
Wednesday, April 7, 1999

This section of the FEDERAL REGISTER contains documents other than rules or proposed rules that are applicable to the public. Notices of hearings and investigations, committee meetings, agency decisions and rulings, delegations of authority, filing of petitions and applications and agency statements of organization and functions are examples of documents appearing in this section.

DEPARTMENT OF AGRICULTURE

Submission for OMB Review; Comment Request

April 2, 1999.

The Department of Agriculture has submitted the following information collection requirement(s) the OMB for review and clearance under the Paperwork Reduction Act of 1995, Public Law 104–13. Comments regarding (a) whether the collection of information is necessary for the proper performance of the functions of the agency, including whether the information will have practical utility; (b) the accuracy of the agency's estimate of burden including the validity of the methodology and assumptions used; (c) ways to enhance the quality, utility and clarity of the information to be collected; (d) ways to minimize the burden of the collection of information on those who are to respond, including through the use of appropriate automated, electronic, mechanical, or other technological collection techniques or other forms of information technology should be addressed to: Desk Officer for Agriculture, Office of Information and Regulatory Affairs, Office of Management and Budget (OMB), Washington, D.C. 20503 and to Departmental Clearance Office, USDA, OCIO, Mail Stop 7602, Washington, D.C. 20250–7602. Comments regarding these information collections are best assured of having their full effect if received within 30 days of this notification. Copies of the submission(s) may be obtained by calling (202) 720–6746.

An agency may not conduct or sponsor a collection of information unless the collection of information displays a currently valid OMB control number and the agency informs potential persons who are to respond to the collection of information that such persons are not required to respond to the collection of information unless it displays a currently valid OMB control number.

Farm Service Agency

Title: Loan Deficiency Payments.

OMB Control Number: 0560–0129.

Summary of Collection: Loan deficiency payments are authorized by the Federal Agriculture Improvement and Reform Act of 1966 (1996 Act), Section 135. The Farm Service Agency (FSA), on behalf of the Commodity Credit Corporation (CCC), administers the marketing assistance loan and loan deficiency programs. The loan deficiency payment option allows producers of eligible upland cotton, rice, wheat, feed grains, and oilseeds (marketing assistance loan commodities) to obtain loan deficiency payments on their eligible production instead of placing the commodity under a CCC marketing assistance loan. Loan deficiency payments are made available when the loan rate for the commodity is greater than the announced repayment rate or world market price, as applicable. An eligible producer on a farm must have: (1) complied with the highly erodible land requirements; (2) completed payment limitation eligibility requirements; (3) reported planted acres for commodities applicable to loan and loan deficiency payment requests; (4) met the applicable crop insurance requirements; (5) a share in the risk of producing the commodity; and (6) beneficial interests in the commodity, which includes control of the commodity, risk of loss, and title to the commodity, at the time of the loan deficiency payment request. The FSA will collect information using forms CCC–633 LDP, CCC–Cotton AA, and CCC–709.

Need and Use of the Information: FSA will collect information to determine the eligibility, applicable payments rates, quantities, and payment amount of participants to receive loan deficiency payments. They will also use the information to determine cases of noncompliance with the regulations governing the loan deficiency payment program. Furnishing the data is voluntary. However, without it, assistance under the CCC loan deficiency payment program cannot be provided.

Description of Respondents: Farm; individuals or households; Business or other for-profit.

Number of Respondents: 600,000.

Frequency of Responses: Reporting: Annually.

Total Burden Hours: 1,117,500.

Farm Service Agency

Title: Application for Payment of Amounts Due Persons who have Died, Disappeared or have been Declared Incompetent.

OMB Control Number: 0560–0026.

Summary of Collection: Representatives or survivors of producers who die, disappear, or are declared incompetent must be afforded a method of obtaining any payment intended for the producer as stipulated in 7 CFR 707. It is necessary to collect information recorded on FSA–325 in order to determine whether representatives or survivors of a producer are entitled to receive payments earned by a producer who dies, disappears, or is declared incompetent before receiving the payments. The Farm Service Agency (FSA) will collect information using form FSA–315.

Need and Use of the Information: FSA will collect information to determine eligibility for representatives or survivors to receive payment of amounts due persons who have died, disappeared, or have been declared incompetent.

Description of Respondents: Individuals or households; business or other for-profit; not-for-profit institutions; State, Local or Tribal Government.

Number of Respondents: 3,000.

Frequency of Responses: Reporting: other (when necessary).

Total Burden Hours: 1,500.

Forest Service

Title: Smith River National Recreation Area.

OMB Control Number: 0596–0138.

Summary of Collection: The Smith River National Recreation Area (NRA) was established by the Smith River National Recreation Area Act of 1990. Section 8(d) of the Act directed the Secretary of Agriculture to promulgate supplementary mineral regulations to ensure ''* * * the preservation, protection, enhancement, and interpretation for present and future generations of the Smith River Watershed's outstanding wild and scenic rivers, ecological diversity, and recreation opportunities while providing for the wise use and sustained

productivity of its natural resources. Some of the lands within the NRA fall under the purview of the United States mining laws of 1872, as amended, which governs the prospecting for and appropriation of metallic and most nonmetallic minerals. This law provides individuals the right to search for and extract valuable locatable minerals and secure title to the lands involved. A prospector, upon discovering a valuable mineral deposit, may locate a mining claim. Recording that claim in the local courthouse, and with the appropriate BLM State Office, affords the mining claimant protection from subsequent locators. A mining claimant is then entitled to reasonable access to the claim for further prospecting, mining or necessary related activities, subject to other laws and applicable regulations. The Forest Service (FS) will collect information using the Plan of Operations Form FS–2800–5 or whatever format or medium that the operator chooses to process request to mine on federally-owned and/or managed lands.

Need and Use of the Information: FS will collect information on the name and legal mailing address of the operator, owner, and any lessees, assigns, and designees; copy of the deed/legal instrument that conveyed the outstanding mineral rights; sketches/maps of the outstanding mineral rights location, the proposed area of operations, existing/proposed roads or access routes, any new proposed road construction, and the approximate location and size of the areas to be disturbed including existing or proposed structures, facilities, and other improvements; description of the type of operation which includes a list of the type, size, location, and number of structures, facilities, and other improvements. etc. The collection of this information is necessary to ensure the continued stability of the area surrounding the mining site and to monitor the mining operation.

Description of Respondents: Business or other for-profit.

Number of Respondents: 2.

Frequency of Responses: Reporting: On occasion.

Total Burden Hours: 40.

Nancy B. Sternberg,

Departmental Clearance Officer.

[FR Doc. 99–8607 Filed 4–6–99; 8:45 am]

BILLING CODE 3410–01–M

DEPARTMENT OF COMMERCE

Submission For OMB Review; Comment Request

DOC has submitted to the Office of Management and Budget (OMB) for clearance the following proposal for collection of information under the provisions of the Paperwork Reduction Act (44 U.S.C. chapter 35).

Agency: Bureau of the Census.

Title: Survey of Income and Program Participation 1996 Panel Wave 11.

Form Number(s): SIPP/CAPI Automated Instrument, SIPP–161105(L).

Agency Approval Number: 0607–0813.

Type of Request: Revision of a currently approved collection.

Burden: 117,800 hours..

Number of Respondents: 77,700.

Avg Hours Per Response: 30 minutes.

Needs and Uses: The Bureau of the Census conducts the Survey of Income and Program Participation (SIPP) to collect information from a sample of households concerning the distribution of income received directly as money or indirectly as in-kind benefits. SIPP data are use by economic policymakers, the Congress, state and local governments, and Federal agencies that administer social welfare and transfer payment programs such as the Department of Health and Human Services, the Department of Housing and Urban Development, and the Department of Agriculture.

The SIPP is a longitudinal survey, in that households in the panel are interviewed 12 times at 4-month intervals or waves over the life of the panel, making the duration of the panel about 4 years. The next panel of households will be introduced in the year 2000.

The survey is molded around a central core of labor force and income questions, health insurance questions, and questions concerning government program participation that remain fixed throughout the life of the panel. The core questions are asked at Wave 1 and are updated during subsequent interviews. The core is supplemented with additional questions or topical modules designed to answer specific needs.

This request is for clearance of the topical modules to be asked during Wave 11 of the 1996 Panel. The core questions and topical modules for Waves 1–10 have already been cleared. The topical modules for Wave 11 are: (1) Child Support Agreements, (2) Support for Non-household members, (3) Adult Disability, (4) Child Disability, and (5) Computer and Internet Usage. Wave 11 interviews will be conducted from August through November 1999.

The Census Bureau is conducting incentive experiments over the course of the 1996 Panel. Monetary incentives to encourage response have been incorporated into most Waves of the 1996 Panel. Wave 11 also includes an incentive experiment.

Affected Public: Individuals or households.

Frequency: Every 4 months.

Respondent's Obligation: Voluntary.

Legal Authority: Title 13 U.S.C., Section 182.

OMB Desk Officer: Nancy Kirkendall, (202) 395–7313.

Copies of the above information collection proposal can be obtained by calling or writing Linda Engelmeier, DOC Forms Clearance Officer, (202) 482–3272, Department of Commerce, room 5033, 14th and Constitution Avenue, NW, Washington, DC 20230.

Written comments and recommendations for the proposed information collection should be sent within 30 days of publication of this notice to Nancy Kirkendall, OMB Desk Officer, room 10201, New Executive Office Building, Washington, DC 20503.

Dated: April 1, 1999.

Linda Engelmeier,

Departmental Forms Clearance Officer, Office of the Chief Information Officer.

[FR Doc. 99–8588 Filed 4–6–99; 8:45 am]

BILLING CODE 3510–07–P

DEPARTMENT OF COMMERCE

Office of the Secretary

Estimates of the Voting Age Population for 1998

AGENCY: Office of the Secretary, Commerce.

ACTION: General Notice Announcing Population Estimates.

SUMMARY: This notice announces the voting age population estimates, as of July 1, 1998, for each state and the District of Columbia. We are giving this notice in accordance with the 1976 amendment to the Federal Election Campaign Act, Title 2, United States Code, Section 441a(e).

FOR FURTHER INFORMATION CONTACT: John F. Long, Chief, Population Division, Bureau of the Census, Department of Commerce, Room 2011, Federal Building 3, Washington, DC 20233, telephone 301–457–2071.

SUPPLEMENTARY INFORMATION: Under the requirements of the 1976 amendment to the Federal Election Campaign Act, Title 2, United States Code, Section

441a(e), I hereby give notice that the estimates of the voting age population for July 1, 1998, for each state and the District of Columbia are as shown in the following table.

ESTIMATE OF THE POPULATION OF VOTING AGE FOR EACH STATE AND DISTRICT OF COLUMBIA: JULY 1, 1998

[In thousands]

Area	Population 18 and over
United States	200,426
Alabama	3,268
Alaska	422
Arizona	3,405
Arkansas	1,885
California	23,755
Colorado	2,930
Connecticut	2,483
Delaware	565
District of Columbia	420
Florida	11,376
Georgia	5,620
Hawaii	895
Idaho	878
Illinois	8,858
Indiana	4,382
Iowa	2,140
Kansas	1,932
Kentucky	2,948
Louisiana	3,178
Maine	953
Maryland	3,848
Massachusetts	4,689
Michigan	7,266
Minnesota	3,466
Mississippi	1,995
Missouri	4,032
Montana	656
Nebraska	1,217
Nevada	1,280
New Hampshire	886
New Jersey	6,125
New Mexico	1,233
New York	13,673
North Carolina	5,627
North Dakota	476
Ohio	8,365
Oklahoma	2,467
Oregon	2,457
Pennsylvania	9,142
Rhode Island	751
South Carolina	2,877
South Dakota	537
Tennessee	4,099
Texas	14,130
Utah	1,398
Vermont	450
Virginia	5,147
Washington	4,217
West Virginia	1,407
Wisconsin	3,872
Wyoming	352

I have certified these counts to the Federal Election Commission.

Dated: March 31, 1999.

William M. Daley,

Secretary, Department of Commerce.

[FR Doc. 99–8723 Filed 4–6–99; 8:45 am]

BILLING CODE 3510–07–P

DEPARTMENT OF COMMERCE

Bureau of Export Administration

Action Affecting Export Privileges; Kiyoyuki Yasutomi

On Tuesday, December 8, 1998, **Federal Register** published an Order issued by the Bureau of Export Administration (BXA) on December 1, 1998 (63 FR 67644). The Order identifies Kiyoyuki Yasutomi, with an address at M.E.I. Japan, 6F Sanyo Bldg, 1 Maitocho, Shinjuku ku, Tokyo 160 Japan, as a person denied all U.S. export privileges. The reference to ''M.E.I. Japan'' has caused some confusion in the export community as to the identity of the company listed in Yasutomi's address. To eliminate that confusion, BXA is amending the Order to identify the abbreviation ''M.E.I. Japan'' listed in the address in both the caption and the text of that Order. Under the Order, Kiyoyuki Yasutomi is the person denied export privileges. The acronyn ''M.E.I.'' stands for ''Micro Electronics International.''

Amendment

In the address in the caption and in paragraph I of the text of the Order of December 1, 1998, ''M.E.I. Japan'' should read ''M.E.I. Japan, also known as Micro Electronics International Japan''.

Dated: March 26, 1999.

Eileen M. Albanese,

Director, Office of Exporter Services.

[FR Doc. 99–8540 Filed 4–6–99; 8:45 am]

BILLING CODE 3510–DT–M

DEPARTMENT OF COMMERCE

International Trade Administration

[A–357–405]

Final Results of Expedited Sunset Review: Barbed Wire and Barbless Fencing Wire from Argentina

AGENCY: Import Administration, International Trade Administration, Department of Commerce

ACTION: Notice of Final Results of Expedited Sunset Review: Barbed Wire and Barbless Fencing Wire from Argentina

SUMMARY: On December 2, 1998, the Department of Commerce (''the Department'') initiated a sunset review of the antidumping order on barbed wire and barbless fencing wire from Argentina (63 FR 66527) pursuant to section 751(c) of the Tariff Act of 1930, as amended (''the Act''). On the basis of a notice of intent to participate and substantive comments filed on behalf of the domestic industry and inadequate response (in this case, no response) from respondent interested parties, the Department determined to conduct an expedited review. As a result of this review, the Department finds that revocation of the antidumping order would be likely to lead to continuation or recurrence of dumping at the levels indicated in the Final Results of Review section of this notice.

FOR FURTHER INFORMATION CONTACT: Scott E. Smith or Melissa G. Skinner, Office of Policy for Import Administration, International Trade Administration, U.S. Department of Commerce, 14th Street and Constitution Avenue, NW, Washington, D.C. 20230; telephone: (202) 482–6397 or (202) 482–1560, respectively.

EFFECTIVE DATE: April 7, 1999.

Statute and Regulations

This review was conducted pursuant to sections 751(c) and 752 of the Act. The Department's procedures for the conduct of sunset reviews are set forth in *Procedures for Conducting Five-year (''Sunset'') Reviews of Antidumping and Countervailing Duty Orders*, 63 FR 13516 (March 20, 1998) (''*Sunset Regulations*''). Guidance on methodological or analytical issues relevant to the Department's conduct of sunset reviews is set forth in the Department's Policy Bulletin 98:3'' *Policies Regarding the Conduct of Five-year (''Sunset'') Reviews of Antidumping and Countervailing Duty Orders; Policy Bulletin*, 63 FR 18871 (April 16, 1998) (''*Sunset Policy Bulletin*'').

Scope

The merchandise subject to this antidumping order is barbed wire and barbless fencing wire from Argentina, which is currently classifiable under Harmonized Tariff Schedule (HTS) item number 7313.00.00. The HTS item number is provided for convenience and U.S. Customs purposes. The written product description remains dispositive.

This review covers imports from all manufacturers and exporters of barbed wire and barbless fencing wire from Argentina.

Background

On December 2, 1998, the Department initiated a sunset review of the antidumping order on barbed wire and barbless fencing wire from Argentina (63 FR 66527), pursuant to section 751(c) of the Act. The Department received a Notice of Intent to Participate on behalf of Davis Wire Corporation, Keystone Steel & Wire Company and Oklahoma Steel & Wire Company, Inc. (''domestic interested parties'') on December 16, 1998, within the deadline specified in section 351.218(d)(1)(i) of the Sunset Regulations. Each company claimed interested party status under section 771(9)(C) of the Act as a domestic producer of barbed wire. In addition, Keystone Steel & Wire Company indicated that it is the successor-in-interest to the original petitioner, Forbes Steel & Wire Corporation, and Davis Wire Corporation indicated that it is the successor-in-interest to one of the companies that supported the original petition in this case, CF&I Steel Corporation. Further, Oklahoma Steel & Wire Company, Inc. indicated that it supported the original petition filed by Forbes Steel & Wire Corporation in 1984. We received a complete substantive response from the domestic interested parties on January 4, 1999, within the 30-day deadline specified in the Sunset Regulations under section 351.218(d)(3)(i). We did not receive a substantive response from any respondent interested party to this proceeding. As a result, pursuant to 19 CFR 351.218(e)(1)(ii)(C), the Department determined to conduct an expedited, 120-day, review of this order.

Determination

In accordance with section 751(c)(1) of the Act, the Department conducted this review to determine whether revocation of the antidumping order would be likely to lead to continuation or recurrence of dumping. Section 752(c) of the Act provides that, in making this determination, the Department shall consider the weighted-average dumping margins determined in the investigation and subsequent reviews and the volume of imports of the subject merchandise for the period before and the period after the issuance of the antidumping order, and shall provide to the International Trade Commission (''the Commission'') the magnitude of the margin of dumping likely to prevail if the order is revoked.

The Department's determinations concerning continuation or recurrence of dumping and the magnitude of the margin are discussed below. In addition, parties' comments with respect to continuation or recurrence of dumping and the magnitude of the margin are addressed within the respective sections below.

Continuation or Recurrence of Dumping

Drawing on the guidance provided in the legislative history accompanying the Uruguay Round Agreements Act (''URAA''), specifically the Statement of Administrative Action (''the SAA''), H.R. Doc. No. 103–316, vol. 1 (1994), the House Report, H.R. Rep. No. 103–826, pt.1 (1994), and the Senate Report, S. Rep. No. 103–412 (1994), the Department issued its *Sunset Policy Bulletin* providing guidance on methodological and analytical issues, including the bases for likelihood determinations. In its *Sunset Policy Bulletin*, the Department indicated that determinations of likelihood will be made on an order-wide basis (*see* section II.A.3). In addition, the Department indicated that normally it will determine that revocation of an antidumping order is likely to lead to continuation or recurrence of dumping where (a) dumping continued at any level above *de minimis* after the issuance of the order, (b) imports of the subject merchandise ceased after the issuance of the order, or (c) dumping was eliminated after the issuance of the order and import volumes for the subject merchandise declined significantly (*see* section II.A.3).

In addition to guidance on likelihood provided in the *Sunset Policy Bulletin* and legislative history, section 751(c)(4)(B) of the Act provides that the Department shall determine that revocation of an order is likely to lead to continuation or recurrence of dumping where a respondent interested party waives its participation in the sunset review. In the instant review, the Department did not receive a response from any respondent interested party. Pursuant to section 351.218(d)(2)(iii) of the *Sunset Regulations*, this constitutes a waiver of participation.

The antidumping duty order on barbed wire and barbless fencing wire from Argentina was published in the **Federal Register** on November 13, 1985 (50 FR 46808). No administrative reviews of this case have been conducted by the Department.[1] The order remains in effect for all manufacturers and exporters of the subject merchandise.

In its substantive response, the domestic interested parties argue that the likely effect of revocation of the order against barbed wire from Argentina is that dumping would recur (*see* January 4, 1999 Substantive Response of the Domestic Interested Parties at 2). With respect to whether imports of the subject merchandise ceased after the issuance of the order, the domestic interested parties, citing American Iron and Steel Institute data, state that imports of barbed wire from Argentina disappeared from the U.S. market during the course of the original antidumping investigation, and that there have been no imports at all since 1986 (*see* January 4, 1999 Substantive Response of the Domestic Interested Parties at 2). Further, with respect to whether dumping continued at any level above *de minimis* after the issuance of the order, the domestic interested parties state that the dumping margin has remained at 69.02 percent *ad valorem* during the life of the order (*see* January 4, 1999 Substantive Response of the Domestic Interested Parties at 2).

In conclusion, the domestic interested parties argued that the Department should determine that there is a likelihood that dumping would resume if the order were to be revoked because (1) shipments of subject merchandise ceased following the imposition of the order and have not resumed, (2) dumping margins have existed for all known exporters of the subject merchandise during the entire life of the order, and (3) there are no significant barriers for new or former suppliers to enter the market.

Consistent with section 752(c) of the Act, the Department considered the volume of imports of the subject merchandise before and after issuance of the order. The statistics on imports of the subject merchandise between 1980 and 1997, provided by the domestic interested parties and confirmed by U.S. Census Bureau IM146 reports, indicate that imports of the subject merchandise ceased after 1986 and have not resumed.

As discussed in section II.A.3 of the *Sunset Policy Bulletin*, the SAA at 890, and the House Report at 63–64, ''[i]f imports cease after the order is issued, it is reasonable to assume that exporters could not sell in the United States without dumping and that, to reenter the U.S. market, they would have to resume dumping.'' Imports of barbed wire and barbless fencing wire from Argentina ceased soon after the issuance of the order. The Department finds that the cessation of imports after the

[1] The Department did publish the following notice prior to the establishment of the antidumping duty order. *See Barbed Wire and Barbless Fencing Wire from Argentina: Final Determination of Sales at Less Than Fair Value*; 50 FR 38563, September 23, 1985.)

issuance of the order is highly probative of the likelihood of continuation or recurrence of dumping. Furthermore, deposit rates above *de minimis* levels continue in effect for all shipments of the subject merchandise from Argentina.[2] Therefore, absent argument and evidence to the contrary, given that shipments of the subject merchandise ceased soon after the issuance of the order, that dumping margins continue to exist, and that respondent interested parties have waived their right to participate in this review before the Department, we determine that, consistent with Section II.A.3 of the *Sunset Policy Bulletin*, dumping is likely to continue or recur if the order were revoked.

Magnitude of the Margin

In the *Sunset Policy Bulletin*, the Department stated that it will normally provide to the Commission the margin that was determined in the final determination in the original investigation. Further, for companies not specifically investigated or for companies that did not begin shipping until after the order was issued, the Department normally will provide a margin based on the ''all others'' rate from the investigation. (*See* section II.B.1 of the *Sunset Policy Bulletin*.) Exceptions to this policy include the use of a more recently calculated margin, where appropriate, and consideration of duty absorption determinations. (*See* sections II.B.2 and 3 of the *Sunset Policy Bulletin*.)

The Department, in its final determination of sales at less than fair value, published a weighted-average dumping margin for one Argentine manufacturer/exporter, Acindar Industria Argentina de Aceros S.A. (''Acindar'') (50 FR 38563, September 23, 1985). The Department also published an ''all others'' rate in this same **Federal Register** notice. With respect to duty absorption findings, because there have been no completed administrative reviews of the order, the Department has not had the opportunity to address the issue of duty absorption.

In its substantive response, the domestic interested parties state that the weighted-average dumping margin calculated by the Department for Acindar in the original investigation is the dumping margin likely to prevail if the order were revoked (*see* January 4, 1999 Substantive Response of the Domestic Interested Parties at 4). The domestic interested parties make this statement because this order has never undergone an administrative review and the dumping margin from the original investigation provides the best evidence of the likely dumping margin in the absence of the order.

The Department agrees with the domestic interested parties' argument concerning the choice of the margin rate to report to the Commission. An examination of the margin history of the order as well as an examination of import statistics of the subject merchandise, as provided in U.S. Department of Commerce Trade Statistics data, confirms that dumping margins have existed throughout the life of the order and that imports of the subject merchandise ceased soon after its imposition.

The Department finds the margin from the original investigation is the only calculated rate that reflects the behavior of exporters without the discipline of the order. Therefore, consistent with the *Sunset Policy Bulletin*, we determine that the margin calculated in the Department's original investigation is probative of the behavior of Argentine producers and exporters of barbed wire and barbless fencing wire if the order were revoked. We will report to the Commission the company-specific and ''all others'' rate from the original investigation contained in the *Final Results of Review* section of this notice.

Final Results of Review

As a result of this review, the Department finds that revocation of the antidumping order would likely to lead to continuation or recurrence of dumping at the margins listed below:

Manufacturer/exporter	Margin (percent)
Acindar	69.02
All Others	69.02

This notice serves as the only reminder to parties subject to administrative protective order (APO) of their responsibility concerning the disposition of proprietary information disclosed under APO in accordance with 19 CFR 351.305 of the Department's regulations. Timely notification of return/destruction of APO materials or conversion to judicial protective order is hereby requested. Failure to comply with the regulations and the terms of an APO is a sanctionable violation.

This five-year (''sunset'') review and notice are in accordance with sections 751(c), 752, and 777(i)(1) of the Act.

Dated: April 1, 1999.

Robert S. LaRussa,

Assistant Secretary for Import Administration.

[FR Doc. 99–8625 Filed 4–6–99; 8:45 am]

BILLING CODE 3510–DS–P

[2] *See Barbed wire and Barbless Fencing Wire from Argentina: Final Determination of Sales at Less Than Fair Value*, 50 FR 38563 (September 23, 1985) and *Antidumping Duty Order: Barbed Wire and Barbless Fencing Wire from Argentina*, 50 FR 46808 (November 13, 1985).

DEPARTMENT OF COMMERCE

International Trade Administration

[A–351–605]

Final Results of Expedited Sunset Review: Frozen Concentrated Orange Juice from Brazil

AGENCY: Import Administration, International Trade Administration, Department of Commerce.

ACTION: Notice of Final Results of Expedited Sunset Review: Frozen Concentrated Orange Juice (FCOJ) from Brazil.

SUMMARY: On December 2, 1998, the Department of Commerce (''the Department'') initiated a sunset review of the antidumping order on frozen concentrated orange juice from Brazil (63 FR 66527) pursuant to section 751(c) of the Tariff Act of 1930, as amended (''the Act''). On the basis of a notice of intent to participate and substantive comments filed on behalf of the domestic interested parties and inadequate response (in this case, no response) from respondent interested parties, the Department determined to conduct an expedited review. As a result of this review, the Department finds that revocation of the antidumping order would be likely to lead to continuation or recurrence of dumping at the levels indicated in the Final Results of the Review section of this notice.

FOR FURTHER INFORMATION CONTACT: Darla D. Brown or Melissa G. Skinner, Office of Policy for Import Administration, International Trade Administration, U.S. Department of Commerce, 14th Street and Constitution Avenue, NW, Washington, D.C. 20230; telephone: (202) 482–3207 or (202) 482–1560, respectively.

EFFECTIVE DATE: April 7, 1999.

Statute and Regulations

This review was conducted pursuant to sections 751(c) and 752 of the Act. The Department's procedures for the conduct of sunset reviews are set forth in *Procedures for Conducting Five-year (''Sunset'') Reviews of Antidumping and Countervailing Duty Orders*, 63 FR 13516 (March 20, 1998) (''*Sunset Regulations*''). Guidance on methodological or analytical issues

relevant to the Department's conduct of sunset reviews is set forth in the Department's Policy Bulletin 98:3—*Policies Regarding the Conduct of Five-year (''Sunset'') Reviews of Antidumping and Countervailing Duty Orders; Policy Bulletin*, 63 FR 18871 (April 16, 1998) (''Sunset Policy Bulletin'').

Scope

The merchandise subject to this antidumping order is frozen concentrated orange juice from Brazil.[1] Such merchandise is currently classifiable under Harmonized Tariff Schedule (HTS) item number 2009.11.00. The HTS item number is provided for convenience and Customs purposes only. The written description remains dispositive.

This review covers imports from all manufacturers and exporters of frozen concentrated orange juice from Brazil, other than imports produced by Sucocitrico Cutrale, S.A., which was excluded from the order (52 FR 16426, May 5, 1987), as well as Cargill Citrus Ltda, Citrosuco Paulista S.A., Coopercitrus Industrial Frutesp S.A., and Montectirus Trading S.A., for which the order was revoked (56 FR 52510, October 21, 1991) and Frutropic, for which the order was also revoked (59 FR 53137, October 21, 1994).

Background

On December 2, 1998, the Department initiated a sunset review of the antidumping order on frozen concentrated orange juice from Brazil (63 FR 66527), pursuant to section 751(c) of the Act. The Department received a Notice of Intent to Participate on behalf of Florida Citrus Mutual, Caulkins Indiantown Citrus Co., Citrus Belle, Citrus World, Inc., Orange Co. of Florida, Inc., Peace River Citrus Products, Inc., and Southern Gardens Citrus Processors Corp. (collectively ''the domestic interested parties'') on December 17, 1998, within the deadline specified in section 351.218(d)(1)(i) of the *Sunset Regulations*. Pursuant to 19 USC § 1677(9)(G)(iii), the domestic interested parties claimed interested party status as a coalition representative of growers and processors of oranges and orange juice. In addition, Florida Citrus Mutual, a trade association representing growers of oranges used in the production of FCOJ, was the original petitioner in the antidumping duty investigation of FCOJ from Brazil. We received a complete substantive response from the domestic interested parties on January 4, 1999, within the 30-day deadline specified in the *Sunset Regulations* under section 351.218(d)(3)(i). We did not receive a substantive response from any respondent interested party to this proceeding. As a result, pursuant to 19 CFR 351.218(e)(1)(ii)(C), the Department determined to conduct an expedited, 120-day, review of this order. On February 8, 1999, the domestic interested parties submitted a copy of the preliminary results of the latest administrative review of FCOJ from Brazil, covering the period between May 1, 1997 and April 30, 1998.[2]

Determination

In accordance with section 751(c)(1) of the Act, the Department conducted this review to determine whether revocation of the antidumping order would be likely to lead to continuation or recurrence of dumping. Section 752(c) of the Act provides that, in making this determination, the Department shall consider the weighted-average dumping margins determined in the investigation and subsequent reviews and the volume of imports of the subject merchandise for the period before and the period after the issuance of the antidumping order, and shall provide to the International Trade Commission (''the Commission'') the magnitude of the margin of dumping likely to prevail if the order is revoked.

The Department's determinations concerning continuation or recurrence of dumping and the magnitude of the margin are discussed below. In addition, parties' comments with respect to continuation or recurrence of dumping and the magnitude of the margin are addressed within the respective sections below.

Continuation or Recurrence of Dumping

Drawing on the guidance provided in the legislative history accompanying the Uruguay Round Agreements Act (''URAA''), specifically the Statement of Administrative Action (''the SAA''), H.R. Doc. No. 103–316, vol. 1 (1994), the House Report, H.R. Rep. No. 103–826, pt. 1 (1994), and the Senate Report, S. Rep. No. 103–412 (1994), the Department issued its *Sunset Policy Bulletin* providing guidance on methodological and analytical issues, including the bases for likelihood determinations. In its *Sunset Policy Bulletin*, the Department indicated that determinations of likelihood will be made on an order-wide basis (*see* section II.A.3). In addition, the Department indicated that normally it will determine that revocation of an antidumping order is likely to lead to continuation or recurrence of dumping where (a) dumping continued at any level above de minimis after the issuance of the order, (b) imports of the subject merchandise ceased after the issuance of the order, or (c) dumping was eliminated after the issuance of the order and import volumes for the subject merchandise declined significantly (*see* section II.A.3).

In addition to guidance on likelihood provided in the *Sunset Policy Bulletin* and legislative history, section 751(c)(4)(B) of the Act provides that the Department shall determine that revocation of the order would be likely to lead to continuation or recurrence of dumping where a respondent interested party waives its participation in the sunset review. In the instant review, the Department did not receive a substantive response from any respondent interested party. Pursuant to section 351.218(d)(2)(iii) of the *Sunset Regulations*, this constitutes a waiver of participation.

The antidumping order on FCOJ from Brazil was published in the **Federal Register** on May 5, 1987 (52 FR 16426). Since that time, the Department has conducted several administrative reviews.[3] On October 21, 1991, the Department revoked the order with respect to imports produced by Cargill Citrus Ltda, Citrosuco Paulista S.A., Coopercitrus Industrial Frutesp S.A., and Montectirus Trading S.A. (56 FR 52510, October 21, 1991). On October 21, 1994, the Department also revoked

[1] Pulpwash, a by-product of FCOJ which is composed of water-extracted soluble orange solids, was found to be outside of the scope of the order (55 FR 26721, June 29, 1990).

[2] *See Frozen Concentrated Orange Juice from Brazil; Preliminary Results and Partial Rescission of Antidumping Duty Administrative Review*, 64 FR 5767 (February 5, 1999).

[3] *See Frozen Concentrated Orange Juice from Brazil; Final Results of Antidumping Duty Administrative Review*, 55 FR 26721 (June 29, 1990); *Frozen Concentrated Orange Juice from Brazil; Final Results and Termination in Part of Antidumping Duty Administrative Review*, 55 FR 47502 (November 14, 1990); *Frozen Concentrated Orange Juice from Brazil; Final Results and Termination in Part of Antidumping Duty Administrative Review; Revocation in Part of the Antidumping Duty Order*, 56 FR 52510 (October 21, 1991); *Frozen Concentrated Orange Juice from Brazil; Final Results and Termination in Part of Antidumping Duty Administrative Review*, 57 FR 12910 (April 14, 1992); *Frozen Concentrated Orange Juice from Brazil; Final Results of Antidumping Duty Administrative Review and Revocation of Order in Part*, 59 FR 53137 (October 21, 1994); *Notice of Final Results of Antidumping Duty Administrative Review: Frozen Concentrated Orange Juice from Brazil*, 62 FR 5798 (February 7, 1997); *Frozen Concentrated Orange Juice from Brazil; Final Results of Antidumping Duty Administrative Review*, 62 FR 29328 (May 30, 1997); *Frozen Concentrated Orange Juice from Brazil; Final Results of Antidumping Duty Administrative Review*, 63 FR 26145 (May 12, 1998).

the order for Frutropic (59 FR 53137, October 21, 1994). The order remains in effect for all other manufacturers and exporters of the subject merchandise.

In its substantive response, the domestic interested parties argued that the actions taken by producers and exporters of FCOJ during the life of the order indicate that the likely effect of revocation of the order in this case would be that dumping of FCOJ would continue or resume, and that margins would increase (*see* Substantive Response of the Domestic Interested Parties, January 4, 1999, at 3). With respect to whether dumping continued at any level above de minimis after the issuance of the order, the domestic interested parties stated that while there have been determinations of de minimis or zero margins for certain producers in the past, in the current administrative review (covering entries during the period June 1997–May 1998), the Department has found enough evidence of sales in home or third country markets below cost of production of FCOJ to initiate a cost investigation (*see* Substantive Response of the Domestic Interested Parties, January 4, 1999, at 4–5).

With respect to whether imports of the subject merchandise ceased after the issuance of the order, the domestic interested parties maintained that since FCOJ is a commodity product, the fact that import volumes have risen or declined in absolute terms since the imposition of the order is of lesser probative value (*see id.*). They went on to argue that agricultural commodities, such as FCOJ, require additional analysis, due to the perishable nature of the article and its production cycles (*see id.*).

In conclusion, the domestic interested parties argued that the Department should determine that there is a likelihood that dumping would continue were the order revoked because dumping margins have existed throughout the life of the order for some Brazilian exporters/producers of FCOJ.

As discussed in Section II.A.3 of the *Sunset Policy Bulletin*, the SAA at 890, and the House Report at 63–64, if companies continue dumping with the discipline of an order in place, the Department may reasonably infer that dumping would continue if the discipline were removed. A dumping margin above de minimis continues to exist for shipments of the subject merchandise from Branco Peres Citrus S.A. [4]

Consistent with section 752(c) of the Act, the Department also considers the volume of imports before and after issuance of the order. The Department's statistics on imports of FCOJ from Brazil between 1985 and 1998, demonstrate that in 1987, the year the order was imposed, imports of FCOJ fell sharply (from approximately 2.2 billion liters in 1986 to approximately 2 million liters in 1987).[5] Since the imposition of the order, imports of FCOJ have not reached the pre-order level; however, imports of subject merchandise have not consistently decreased either.

As noted above, in conducting its sunset reviews, the Department considers the weighted-average dumping margins and volume of imports when determining whether revocation of an antidumping duty order would lead to the continuation or recurrence of dumping. Based on this analysis, the Department finds that the existence of dumping margins above de minimis levels after the issuance of the order is highly probative of the likelihood of continuation or recurrence of dumping. Therefore, the Department finds no reason to consider the domestic interested parties' argument that additional analysis is required for antidumping orders on agricultural products. A deposit rate above a de minimis level continues in effect for exports of the subject merchandise by at least one known Brazilian manufacturer/exporter. Therefore, given that dumping has continued over the life of the order, respondent interested parties waived participation in this sunset review, and absent argument and evidence to the contrary, the Department determines that dumping is likely to continue if the order were revoked.

Magnitude of the Margin

In the Sunset Policy Bulletin, the Department stated that it normally will provide to the Commission the margin that was determined in the final determination in the original investigation. Further, for companies not specifically investigated or for companies that did not begin shipping until after the order was issued, the Department normally will provide a margin based on the ''all others'' rate from the investigation. (*See* section II.B.1 of the *Sunset Policy Bulletin*.) Exceptions to this policy include the use of a more recently calculated margin, where appropriate, and consideration of duty absorption determinations. (*See* sections II.B.2 and 3 of the *Sunset Policy Bulletin*.)

The Department, in its final determination of sales at less than fair value (''LTFV''), published a weighted-average dumping margin for one Brazilian producer/exporter, Citrosuco Paulista, of frozen concentrated orange juice (52 FR 8324, March 17, 1987). As discussed above, the order with respect to Citrosuco Paulista has been revoked. The final LTFV determination also contained an ''all others'' rate. We note that, to date, the Department has not issued any duty absorption findings in this case.

In its substantive response, the domestic interested parties recommended that the Department deviate from its stated policy of selecting rates from the original investigation. Specifically, the domestic interested parties suggested that, because it is a commodity product, FCOJ should not be treated as other industrial products, where pricing may vary considerably from one producer to another. Rather, they suggested that current market conditions will dictate the level of dumping if there were no order. Therefore, the domestic interested parties requested that the Department apply the new, higher, dumping margin of 65.2 percent found in the preliminary results and partial rescission of the most recent antidumping duty administrative review (64 FR 5767, February 5, 1999).

Because the results of the ongoing administrative review have not yet been finalized, the Department believes it is not appropriate to rely on those results for the purpose of this determination. Further, we note that, although FCOJ is a commodity product, the magnitude of any margin of dumping is determined based on factors other than market price alone, for example, cost of production. Therefore, absent persuasive evidence to the contrary, the Department continues to believe that as noted in the *Sunset Policy Bulletin*, the margins from the original investigation are the only calculated rates that reflect the behavior of exporters without the discipline of the order in place.

The Department finds no reason to deviate from its stated policy of reporting the margins from the original investigation. The Department finds the margins calculated in the original investigation are probative of the behavior of Brazilian producers/exporters if the order were revoked as they are the only margins which reflect their actions absent the discipline of the order. Therefore, the Department will report to the Commission all others rate from the original investigation as

[4] *See Frozen Concentrated Orange Juice From Brazil: Final Results of Antidumping Administrative Review*, 63 FR 26145 (May 12, 1998).

[5] *See* U.S. Census Bureau Report IM146.

contained in the *Final Results of Review* section of this notice. The Department has not reported the calculated margin for Citrosuco Paulista, S.A., the only company with a calculated margin in the investigation, because the order with respect to Citrosuco Paulista has been revoked.

Final Results of Review

As a result of this review, the Department finds that revocation of the antidumping order would likely lead to continuation or recurrence of dumping at the margins listed below:

Manufacturer/exporter	Margin (percent)
All Others	1.96

This notice serves as the only reminder to parties subject to administrative protective order (APO) of their responsibility concerning the disposition of proprietary information disclosed under APO in accordance with 19 CFR 351.305 of the Department's regulations. Timely notification of return/destruction of APO materials or conversion to judicial protective order is hereby requested. Failure to comply with the regulations and the terms of an APO is a sanctionable violation.

This five-year (''sunset'') review and notice are in accordance with sections 751(c), 752, and 777(i)(1) of the Act.

Dated: April 1, 1999.

Robert S. LaRussa,

Assistant Secretary for Import Administration.

[FR Doc. 99–8618 Filed 4–6–99; 8:45 am]

BILLING CODE 3510–DS–P

DEPARTMENT OF COMMERCE

International Trade Administration

[A–469–007]

Final Results of Expedited Sunset Review: Potassium Permanganate from Spain

AGENCY: Import Administration, International Trade Administration, Department of Commerce.

ACTION: Notice of Final Results of Expedited Sunset Review: Potassium Permanganate from Spain.

SUMMARY: On November 2, 1998, the Department of Commerce (''the Department'') initiated a sunset review of the antidumping order on potassium permanganate from Spain (63 FR 58709) pursuant to section 751(c) of the Tariff Act of 1930, as amended (''the Act''). On the basis of a notice of intent to participate and substantive comments filed on behalf of the domestic industry and inadequate response (in this case, no response) from respondent interested parties, the Department determined to conduct an expedited review. As a result of this review, the Department finds that revocation of the antidumping order would be likely to lead to continuation or recurrence of dumping at the levels indicated in the Final Results of Review section of this notice.

FOR FURTHER INFORMATION CONTACT: Scott E. Smith or Melissa G. Skinner, Office of Policy for Import Administration, International Trade Administration, U.S. Department of Commerce, 14th Street and Constitution Avenue, NW, Washington, D.C. 20230; telephone: (202) 482–6397 or (202) 482–1560, respectively.

EFFECTIVE DATE: April 7, 1999.

Statute and Regulations

This review was conducted pursuant to sections 751(c) and 752 of the Act. The Department's procedures for the conduct of sunset reviews are set forth in *Procedures for Conducting Five-year (''Sunset'') Reviews of Antidumping and Countervailing Duty Orders,* 63 FR 13516 (March 20, 1998) (''*Sunset Regulations*''). Guidance on methodological or analytical issues relevant to the Department's conduct of sunset reviews is set forth in the Department's Policy Bulletin 98:3—*Policies Regarding the Conduct of Five-year (''Sunset'') Reviews of Antidumping and Countervailing Duty Orders; Policy Bulletin,* 63 FR 18871 (April 16, 1998) (''*Sunset Policy Bulletin*'').

Scope

The merchandise subject to this antidumping order is potassium permanganate from Spain, an inorganic chemical produced in free-flowing, technical, and pharmaceutical grades. Potassium permanganate is classifiable under item 2841.61.0000 of the Harmonized Tariff Schedule of the United States (HTSUS). The HTSUS item number is provided for convenience and U.S. Customs purposes. The written description remains dispositive.

This review covers imports from all manufacturers and exporters of Spanish potassium permanganate.

Background

On November 2, 1998, the Department initiated a sunset review of the antidumping order on potassium permanganate from Spain (63 FR 58709), pursuant to section 751(c) of the Act. The Department received a Notice of Intent to Participate on behalf of Carus Chemical Company (''Carus'') on November 16, 1998, within the deadline specified in section 351.218(d)(1)(i) of the *Sunset Regulations.* Carus claimed interested party status under 19 U.S.C. 1677(9)(C) as a U.S. producer of potassium permanganate. In addition, Carus indicated that it was the original petitioner in this proceeding and that it has regularly participated in all administrative reviews. We received a complete substantive response from Carus on December 2, 1998, within the 30-day deadline specified in the *Sunset Regulations* under section 351.218(d)(3)(i). We did not receive a substantive response from any respondent interested party to this proceeding. As a result, pursuant to 19 CFR 351.218(e)(1)(ii)(C), the Department determined to conduct an expedited, 120-day review of this order.

The Department determined that the sunset review of the antidumping duty order on potassium permanganate from Spain is extraordinarily complicated. In accordance with section 751(c)(5)(C)(v) of the Act, the Department may treat a review as extraordinarily complicated if it is a review of a transition order (*i.e.,* an order in effect on January 1, 1995). (*See* section 751(c)(6)(C) of the Act.) Therefore, on March 2, 1999, the Department extended the time limit for completion of the final results of this review until not later than June 1, 1999, in accordance with section 751(c)(5)(B) of the Act.[1]

Determination

In accordance with section 751(c)(1) of the Act, the Department conducted this review to determine whether revocation of the antidumping order would be likely to lead to continuation or recurrence of dumping. Section 752(c) of the Act provides that, in making this determination, the Department shall consider the weighted-average dumping margins determined in the investigation and subsequent reviews and the volume of imports of the subject merchandise for the period before and the period after the issuance of the antidumping order, and shall provide to the International Trade Commission (''the Commission'') the magnitude of the margin of dumping likely to prevail if the order is revoked.

The Department's determinations concerning continuation or recurrence of dumping and the magnitude of the

[1] *See Potassium Permanganate from Spain and the People's Republic of China: Extension of Time Limit for Final Results of Five-Year Review,* 64 FR 10991 (March 8, 1999).

margin are discussed below. In addition, Carus' comments with respect to continuation or recurrence of dumping and the magnitude of the margin are addressed within the respective sections below.

Continuation or Recurrence of Dumping

Drawing on the guidance provided in the legislative history accompanying the Uruguay Round Agreements Act (''URAA''), specifically the Statement of Administrative Action (''the SAA''), H.R. Doc. No. 103–316, vol. 1 (1994), the House Report, H.R. Rep. No. 103–826, pt.1 (1994), and the Senate Report, S. Rep. No. 103–412 (1994), the Department issued its *Sunset Policy Bulletin* providing guidance on methodological and analytical issues, including the bases for likelihood determinations. In its *Sunset Policy Bulletin,* the Department indicated that determinations of likelihood will be made on an order-wide basis (*see* section II.A.3). In addition, the Department indicated that normally it will determine that revocation of an antidumping order is likely to lead to continuation or recurrence of dumping where (a) dumping continued at any level above *de minimis* after the issuance of the order, (b) imports of the subject merchandise ceased after the issuance of the order, or (c) dumping was eliminated after the issuance of the order and import volumes for the subject merchandise declined significantly (*see* section II.A.3).

In addition to guidance on likelihood provided in the *Sunset Policy Bulletin* and legislative history, section 751(c)(4)(B) of the Act provides that the Department shall determine that revocation of an order is likely to lead to continuation or recurrence of dumping where a respondent interested party waives its participation in the sunset review. In the instant review, the Department did not receive a response from any respondent interested party. Pursuant to section 351.218(d)(2)(iii) of the *Sunset Regulations,* this constitutes a waiver of participation.

The antidumping duty order on potassium permanganate from Spain was published in the **Federal Register** on January 19, 1984 (49 FR 2277). Since that time, the Department has conducted three administrative reviews.[2] The order remains in effect for all manufacturers and exporters of the subject merchandise.

In its substantive response, Carus argued that ''it is highly likely that dumping would continue if the antidumping order in this case (the ''Order'') were to be revoked''. With respect to whether dumping continued at any level above *de minimis* after the issuance of the order, Carus stated that the uninterrupted existence of dumping margins for the past decade—and continued failure of IQN [Industrial Quimica del Nalon] to challenge this margin through annual review—provides compelling evidence that Spanish potassium permanganate would be dumped in the U.S. market in the absence of the order (*see* December 2, 1998, Substantive Response of Carus at page 6).

With respect to whether imports of the subject merchandise ceased after the issuance of the order, Carus, citing its own shipment data and official U.S. Census Bureau import statistics, argued that imports of Spanish-origin potassium permanganate increased by almost 250% between 1983 and 1986 and reached an all-time high of over 2.5 million lbs. in 1986, accounting for over 14% of the U.S. market. Moreover, Carus asserts that, during the 1983–86 period, increasing levels of imports were accompanied by increasing levels of dumping, not declining or no dumping (*see* December 2, 1998, Substantive Response of Carus at 7). Carus further argues that the ability of Spanish producers of potassium permanganate to export large quantities of subject merchandise to the U.S. with dumping margins in place suggests that revocation of the order could prompt a massive influx of potassium permanganate into the U.S. at below fair market value. Carus notes that total imports of the subject merchandise continued in substantial volumes during all years when the order was in effect.

In addition, Carus states that there are other factors which support the likelihood of dumping if the order were revoked. Carus argues that the attractiveness of the U.S. market would promote increased imports of Spanish potassium permanganate because U.S. prices of this product are at a premium while prices elsewhere in the world are well below U.S. levels. Furthermore, Carus asserts that Spanish producers have an overcapacity of the subject merchandise and see the U.S., with its premium prices for potassium permanganate, as a vibrant market where they can sell their product.

In conclusion, Carus argued that the Department should determine that there is a likelihood that dumping would continue were the order revoked because (1) dumping margins have existed and continue to exist, (2) shipments of subject merchandise have continued throughout the life of the life of the order, (3) premium prices for potassium permanganate in the U.S. will promote continued, if not increased, dumping by Spanish producers and (4) Spanish producers have an overcapacity of the subject merchandise and need markets, especially ones with high prices, in which to sell.

As discussed in Section II.A.3 of the *Sunset Policy Bulletin,* the SAA at 890, and the House Report at 63–64, if companies continue dumping with the discipline of an order in place, the Department may reasonably infer that dumping would continue if the discipline were removed. A dumping margin above *de minimis* has existed throughout most of the life of the order, and continues to exist, for shipments of the subject merchandise from all Spanish producers/exporters.[3]

Consistent with section 752(c) of the Act, the Department also considered the volume of imports before and after issuance of the order. The import statistics provided by Carus on imports of the subject merchandise between 1981 and 1998, and those examined by the Department (U.S. Census Bureau IM146 reports), demonstrate that imports of the subject merchandise continued throughout the life of the order.

Based on this analysis, the Department finds that the existence of dumping margins after the issuance of the order is highly probative of the likelihood of continuation or recurrence of dumping. Deposit rates above a *de minimis* level continue in effect for exports of the subject merchandise by all known Spanish manufacturers/exporters. Therefore, given that dumping has continued over the life of the order and respondent interested parties have waived their right to participate in this review before the Department, and absent argument and evidence to the contrary, the Department determines that dumping is

[2] *See Potassium Permanganate from Spain; Early Determination of Antidumping Duty,* 49 FR 18341 (April 30, 1984); *Final Results of Antidumping Duty Administrative Review; Potassium Permanganate From Spain,* 53 FR 21504 (June 8, 1988); and *Final Results of Antidumping Duty Administrative Review; Potassium Permanganate From Spain,* 56 FR 58361 (November 19, 1991). Prior to the imposition of the order, the Department published *Potassium Permanganate from Spain; Final Determination of Sales at Less Than Fair Value,* 48 FR 53589 (November 28, 1983).

[3] *See Potassium Permanganate from Spain; Early Determination of Antidumping Duty,* 49 FR 18341 (April 30, 1984); *Final Results of Antidumping Duty Administrative Review; Potassium Permanganate From Spain,* 53 FR 21504 (June 8, 1988); and *Final Results of Antidumping Duty Administrative Review; Potassium Permanganate From Spain,* 56 FR 58361 (November 19, 1991).

likely to continue if the order were revoked.

Because the Department based this determination on the continued existence of margins above *de minimis* and respondent interested parties' waiver of participation, it is not necessary to address Carus' arguments concerning the attractiveness of the U.S. market and Spanish overcapacity and export orientation.

Magnitude of the Margin

In the *Sunset Policy Bulletin,* the Department stated that it will normally provide to the Commission the margin that was determined in the final determination in the original investigation. Further, for companies not specifically investigated or for companies that did not begin shipping until after the order was issued, the Department normally will provide a margin based on the ''all others'' rate from the investigation. (*See* section II.B.1 of the *Sunset Policy Bulletin.*) Exceptions to this policy include the use of a more recently calculated margin, where appropriate, and consideration of duty absorption determinations. (*See* sections II.B.2 and 3 of the *Sunset Policy Bulletin.*)

The Department, in its final determination of sales at less than fair value, published a weighted-average dumping margin for Asturquimica,[4] a Spanish producer/exporter of potassium permanganate, of 5.49 percent (48 FR 53589, November 28, 1983). The Department also published an ''all others'' rate of 5.49 percent in this same **Federal Register** notice. We note that, to date, the Department has not issued any duty absorption findings in this case.

In its substantive response, Carus argues that the Department, as stipulated in the *Sunset Policy Bulletin,* should provide the Commission a more recently calculated margin. Citing the *Sunset Policy Bulletin,* Carus states that ''[a] company may choose to increase dumping in order to maintain or increase market share. As a result, increasing margins may be more representative of a company's behavior in the absence of an order.'' According to Carus, in the administrative review covering August 9, 1983 through January 10, 1984 (49 FR 18341, April 30, 1984), the Department determined that no dumping of Spanish potassium permanganate had occurred during this period justifying a cash deposit rate of zero. After this review, Carus argues that imports of Spanish potassium permanganate soared, reaching a zenith of 2.5 million lbs. in 1986. Carus adds that when it subsequently requested an administrative review (53 FR 21504, June 8, 1988), a dumping margin of 16.16 percent was established for all imports of the subject merchandise. We note that this margin was decreased to 5.53 percent following litigation before the U.S. Court of International Trade.[5]

Carus submits that the determination of no dumping in the 1984 administrative review precipitated an enormous influx of subject merchandise, being sold at less than fair value, because it was no longer subject to the restraint imposed by a positive margin rate. Carus argues that the increase in imports of Spanish potassium permanganate to 2.5 million lbs. from 1983 to 1986 represents an increase of more than 210 percent over this three year period and 250 percent from pre-order levels just five years earlier. In addition, according to Carus, this increase in Spanish imports allowed Spanish producers/exporters to increase their percentage of the market share from just under 6 percent in 1982 (during the period of investigation) to 14.1 percent by 1986. Carus submits that the margin calculated in the administrative review for the period January 1, 1986 to December 31, 1986 (53 FR 21504, June 8, 1988) is more appropriate to report to the Commission.

Further, Carus reasserts its argument concerning the high price of potassium permanganate in the U.S. with respect to its price on the world market. Carus argues that export prices in non-U.S. markets for potassium permanganate fell by over $0.13/lb during 1997 and 1998. Importers in the U.S. market, however, paid a price premium of $0.25/lb in 1997 and $0.23/lb. in 1998.

The Department agrees with Carus' argument concerning the choice of the margin rate to report to the Commission. An examination of the margin history of the order as well as an examination of import statistics of the subject merchandise, as provided in U.S. Census Bureau IM146 reports, confirms the scenario outlined by Carus. From 1983 to 1986, import volumes of the subject merchandise more than doubled. During this period, there was a cash deposit rate of zero in effect. Following the request for an administrative review by Carus, the Department established a dumping margin above *de minimis* levels (53 FR 21504, June 8, 1988). The increase in import volumes during this period of unrestricted market access resulted in an increase in the market share held by Spanish imports. According to the *Sunset Policy Bulletin,* ''a company may choose to increase dumping in order to maintain or increase market share. As a result, increasing margins may be more representative of a company's behavior in the absence of an order.'' Therefore, given the increase in imports through 1986, accompanied by the increase in the dumping margin in 1986, the Department finds this more recent rate is the most probative of the behavior of the known Spanish producer/exporter of potassium permanganate if the order were revoked. As such, the Department will report to the Commission the company-specific and ''all others'' rates from the administrative review for the period January 1, 1986 through December 31, 1986 as contained in the *Final Results of Review* section of this notice.

Final Results of Review

As a result of this review, the Department finds that revocation of the antidumping duty order would likely lead to continuation or recurrence of dumping at the margins listed below:

Manufacturer/exporter	Margin (percent)
IQN	5.53
All Others	5.53

This notice serves as the only reminder to parties subject to administrative protective order (APO) of their responsibility concerning the disposition of proprietary information disclosed under APO in accordance with 19 CFR 351.305 of the Department's regulations. Timely notification of return/destruction of APO materials or conversion to judicial protective order is hereby requested. Failure to comply with the regulations and the terms of an APO is a sanctionable violation.

This five-year (''sunset'') review and notice are in accordance with sections 751(c), 752, and 777(i)(1) of the Act.

Dated: April 1, 1999.

Robert S. LaRussa,

Assistant Secretary for Import Administration.

[FR Doc. 99–8623 Filed 4–6–99; 8:45 am]

BILLING CODE 3510–DS–P

[4] Asturquimica has since merged with IQN (*see* Final Results of Redetermination Pursuant to Court Remand, *Industrial Quimica del Nalon* v. *United States,* Slip Op. 89–174 (December 21, 1989)). Since 1989, the Department has considered IQN the successor to Asturquimica.

[5] Pursuant to an initial court remand, this margin was changed to 12.87 percent (*see* Final Results of Redetermination Pursuant to Court Remand, *Industrial Quimica del Nalon* v. *United States,* Slip Op. 89–174 (December 21, 1989)). Pursuant to a second court remand, the 12.87 percent margin was changed to 5.53 percent (*see* Final Results of Redetermination Pursuant to Court Remand, *Industrial Quimica del Nalon* v. *United States,* Slip Op. 91–43 (May 24, 1991)).

DEPARTMENT OF COMMERCE

International Trade Administration

[A–570–001]

Final Results of Expedited Sunset Review: Potassium Permanganate from the People's Republic of China

AGENCY: Import Administration, International Trade Administration, Department of Commerce.

ACTION: Notice of Final Results of Expedited Sunset Review: Potassium Permanganate from the People's Republic of China.

SUMMARY: On November 2, 1998, the Department of Commerce (''the Department'') initiated a sunset review of the antidumping order on potassium permanganate from the People's Republic of China (63 FR 58709) pursuant to section 751(c) of the Tariff Act of 1930, as amended (''the Act''). On the basis of a notice of intent to participate and substantive comments filed on behalf of the domestic industry and inadequate response (in this case, no response) from respondent interested parties, the Department determined to conduct an expedited review. As a result of this review, the Department finds that revocation of the antidumping order would be likely to lead to continuation or recurrence of dumping at the levels indicated in the Final Results of Review section of this notice.

FOR FURTHER INFORMATION CONTACT: Scott E. Smith or Melissa G. Skinner, Office of Policy for Import Administration, International Trade Administration, U.S. Department of Commerce, 14th Street and Constitution Avenue, NW, Washington, D.C. 20230; telephone: (202) 482–6397 or (202) 482–1560, respectively.

EFFECTIVE DATE: April 7, 1999.

Statute and Regulations

This review was conducted pursuant to sections 751(c) and 752 of the Act. The Department's procedures for the conduct of sunset reviews are set forth in *Procedures for Conducting Five-year (''Sunset'') Reviews of Antidumping and Countervailing Duty Orders,* 63 FR 13516 (March 20, 1998) (''*Sunset Regulations*''). Guidance on methodological or analytical issues relevant to the Department's conduct of sunset reviews is set forth in the Department's Policy Bulletin 98:3—*Policies Regarding the Conduct of Five-year (''Sunset'') Reviews of Antidumping and Countervailing Duty Orders; Policy Bulletin,* 63 FR 18871 (April 16, 1998) (''*Sunset Policy Bulletin*'').

Scope

The merchandise subject to this antidumping order is potassium permanganate from the People's Republic of China (''PRC''), an inorganic chemical produced in free-flowing, technical, and pharmaceutical grades.[1] Potassium permanganate is classifiable under item 2841.61.0000 of the Harmonized Tariff Schedule of the United States (HTSUS). The HTSUS item number is provided for convenience and U.S. Customs purposes. The written description remains dispositive.

This review covers imports from all manufacturers and exporters of potassium permanganate from the PRC.

Background

On November 2, 1998, the Department initiated a sunset review of the antidumping order on potassium permanganate from the People's Republic of China (63 FR 58709), pursuant to section 751(c) of the Act. The Department received a Notice of Intent to Participate on behalf of Carus Chemical Company (''Carus'') on November 16, 1998, within the deadline specified in section 351.218(d)(1)(i) of the *Sunset Regulations.* Carus claimed interested party status under 19 U.S.C. 1677(9)(C) as a U.S. producer of potassium permanganate. In addition, Carus indicated that it was the original petitioner in this proceeding and that it has regularly participated in all administrative reviews. We received a complete substantive response from Carus on December 3, 1998, within the 30-day deadline specified in the *Sunset Regulations* under section 351.218(d)(3)(i). We did not receive a substantive response from any respondent interested party to this proceeding. As a result, pursuant to section 751(c)(3)(B) of the Act and 19 CFR 351.218(e)(1)(ii)(C), the Department determined to conduct an expedited, 120-day review of this order.

The Department determined that the sunset review of the antidumping duty order on potassium permanganate from the People's Republic of China is extraordinarily complicated. In accordance with section 751(c)(5)(C)(v) of the Act, the Department may treat a review as extraordinarily complicated if it is a review of a transition order (*i.e.,* an order in effect on January 1, 1995). (*See* section 751(c)(6)(C) of the Act.) Therefore, on March 2, 1999, the Department extended the time limit for completion of the final results of this review until not later than June 1, 1999, in accordance with section 751(c)(5)(B) of the Act.[2]

Determination

In accordance with section 751(c)(1) of the Act, the Department conducted this review to determine whether revocation of the antidumping order would be likely to lead to continuation or recurrence of dumping. Section 752(c) of the Act provides that, in making this determination, the Department shall consider the weighted-average dumping margins determined in the investigation and subsequent reviews and the volume of imports of the subject merchandise for the period before and the period after the issuance of the antidumping order, and shall provide to the International Trade Commission (''the Commission'') the magnitude of the margin of dumping likely to prevail if the order is revoked.

The Department's determinations concerning continuation or recurrence of dumping and the magnitude of the margin are discussed below. In addition, Carus' comments with respect to continuation or recurrence of dumping and the magnitude of the margin are addressed within the respective sections below.

Continuation or Recurrence of Dumping

Drawing on the guidance provided in the legislative history accompanying the Uruguay Round Agreements Act (''URAA''), specifically the Statement of Administrative Action (''the SAA''), H.R. Doc. No. 103–316, vol. 1 (1994), the House Report, H.R. Rep. No. 103–826, pt.1 (1994), and the Senate Report, S. Rep. No. 103–412 (1994), the Department issued its *Sunset Policy Bulletin* providing guidance on methodological and analytical issues, including the bases for likelihood determinations. In its *Sunset Policy Bulletin,* the Department indicated that determinations of likelihood will be made on an order-wide basis (*see* section II.A.3). In addition, the Department indicated that normally it will determine that revocation of an antidumping order is likely to lead to continuation or recurrence of dumping where (a) dumping continued at any level above *de minimis* after the issuance of the order, (b) imports of the subject merchandise ceased after the issuance of the order, or (c) dumping was eliminated after the issuance of the

[1] On May 19, 1995, the Department determined that plastic ignitor spheres containing potassium permanganate are not within the scope of the order (60 FR 26871).

[2] *See Potassium Permanganate from Spain and the People's Republic of China: Extension of Time Limit for Final Results of Five-Year Review,* 64 FR 10991 (March 8, 1999).

order and import volumes for the subject merchandise declined significantly (see section II.A.3).

In addition to guidance on likelihood provided in the *Sunset Policy Bulletin* and legislative history, section 751(c)(4)(B) of the Act provides that the Department shall determine that revocation of an order is likely to lead to continuation or recurrence of dumping where a respondent interested party waives its participation in the sunset review. In the instant review, the Department did not receive a substantive response from any respondent interested party. Pursuant to section 351.218(d)(2)(iii) of the *Sunset Regulations*, this constitutes a waiver of participation.

The antidumping duty order on potassium permanganate from the PRC was published in the **Federal Register** on January 31, 1984 (49 FR 3897). Since that time, the Department has conducted two administrative reviews.[3] The order remains in effect for all manufacturers and exporters of the subject merchandise.

In its substantive response, Carus argues that it is highly likely that dumping would continue if the antidumping order in this case were to be revoked. (*See* December 3, 1998, Substantive Response of Carus at 2.) With respect to whether dumping continued at any level above *de minimis* after the issuance of the order, Carus argued that high dumping margins have been continuously in place for the almost 15 years since the date of the order. Carus further argues that the uninterrupted existence of high margins over the life of the order, and the continued failure of any PRC producer or exporter to successfully complete an annual review, provides compelling evidence that PRC exporters would engage in dumping at very high rates in the absence of the order. According to Carus, even with the severe discipline of the order in place, PRC exporters have continued to dump. (*See* December 3, 1998, Substantive Response of Carus at 7.)

With respect to whether imports of the subject merchandise ceased after the issuance of the order, Carus, citing its own shipment data and official U.S. Census Bureau import statistics, argued that reported imports of potassium permanganate from the PRC effectively ceased after May 1994, when the Department issued the final results of the 1990 administrative review. (*See* December 3, 1998, Substantive Response of Carus at 7.) Carus argues that PRC producers/exporters were attempting to circumvent the order by shipping subject merchandise through a number of Hong Kong resellers who had not been subject to increased margin rates assigned to PRC producers and certain Hong Kong resellers in the final results of the 1989 administrative review (56 FR 19640).[4] Carus further argues that while imports of Chinese potassium permanganate were subject to the 39.64 percent deposit rate (1984–1990), annual imports surged by almost 580%—from 432,000 lbs. in 1984 to over 2.1 million lbs. in 1989 to over 2.5 million lbs. in 1990. (*See* December 3, 1998, Substantive Response of Carus at 22.) According to Carus, imports of the subject merchandise ceased after the deposit rate increased to reflect the actual level of dumping and purported absorption and, thus, the ''loophole'' associated with sales through Hong Kong resellers was eliminated.

In addition, Carus states that there are other factors which support the likelihood of dumping if the order were revoked. Carus argues that the attractiveness of the U.S. market would promote increased imports of Chinese potassium permanganate because U.S. prices of this product are at a premium while prices elsewhere in the world are well below U.S. levels. Carus also argues that Chinese producers have an oversupply of subject merchandise. In this respect, Carus makes four arguments. First, Carus states that the high antidumping duties established by the European Union and India on potassium permanganate from China have effectively shut Chinese exporters of this product out of those markets, increasing their inventories and forcing them to look elsewhere for export markets. Second, Carus argues that advances in Chinese potassium permanganate production technology have resulted in increased efficiency and enable producers to offer lower prices. These technological advances have resulted in increased production capacities and inventories and, coupled with a lower price, will spur increased exportation. Third, because potassium permanganate has applications in the production of cocaine and China has recently demonstrated greater vigilance in controlling exports of potassium permanganate in situations where it may be used in the production of narcotics, Carus argues that this increased control may result in an additional surplus of Chinese potassium permanganate. According to Carus, this will promote the search for additional export markets which, in turn, may prompt future dumping. Fourth, Carus asserts that the Asian financial crisis has reduced the need for Chinese potassium permanganate in Asia. Carus argues that cash-strapped Asian governments are not likely to begin using large volumes of potassium permanganate in the type of applications for which it is used in the United States—for the treatment of municipal waste and drinking water. According to Carus, these factors may force Chinese producers to look elsewhere to sell their product.

In conclusion, Carus argued that the Department should determine that there is a likelihood that dumping would continue were the order revoked because (1) dumping margins have existed throughout the life of the order, (2) shipments of subject merchandise continued throughout the life of the order and have ceased only recently as the effective margin rate has increased to reflect the actual level of dumping, (3) premium prices for potassium permanganate in the U.S. will promote continued, if not increased, dumping by Chinese producers, (4) Chinese producers have an oversupply of the subject merchandise, for a variety of reasons, and need markets in which to sell and (5) the Asian economic crisis is limiting the number of markets in which Chinese producers of potassium permanganate can sell.

As discussed in Section II.A.3 of the *Sunset Policy Bulletin*, the SAA at 890, and the House Report at 63–64, if companies continue dumping with the discipline of an order in place, the Department may reasonably infer that dumping would continue if the discipline were removed. A dumping margin above *de minimis* continues to exist for shipments of the subject

[3] *See Final Results of Antidumping Duty Administrative Review: Potassium Permanganate from The People's Republic of China*, 56 FR 19640, April 29, 1991 (1989 POR) and *Potassium Permanganate from The People's Republic of China; Final Results of Antidumping Duty Administrative Review*, 59 FR 26625, May 23, 1994 (1990 POR). Prior to the imposition of the order, the Department published *Final Determination of Sales at Less Than Fair Value; Potassium Permanganate from The People's Republic of China*, 48 FR 57347, December 29, 1983.

[4] On April 29, 1991, the Department published *Final Results of Antidumping Duty Administrative Review: Potassium Permanganate from The People's Republic of China* (56 FR 19640) in which all subject merchandise produced and exported directly to the U.S. by Chinese manufacturers became subject to a deposit rate of 128.94 percent. In addition to all PRC producers, a rate of 128.94 percent was established for four of the seven known Hong Kong resellers of the subject merchandise in the 1991 Final Results. In those Final Results, other resellers retained the original 39.63 percent rate established for ''all other'' producers/exporters in the antidumping duty order (*see Antidumping Duty Order; Potassium Permanganate from The People's Republic of China*, 49 FR 3897, January 31, 1984).

merchandise from all Chinese producers/exporters.[5]

Consistent with section 752(c) of the Act, the Department also considered the volume of imports before and after issuance of the order. The import statistics provided by Carus on imports of the subject merchandise between 1980 and 1998, and those examined by the Department (U.S. Census Bureau IM146 reports), demonstrate that imports of the subject merchandise have continued throughout the life of the order.

Based on this analysis, the Department finds that the existence of dumping margins after the issuance of the order is highly probative of the likelihood of continuation or recurrence of dumping. Deposit rates above a *de minimis* level continue in effect for exports of the subject merchandise by all known Chinese manufacturers/exporters. Therefore, given that dumping has continued over the life of the order and respondent interested parties have waived their right to participate in this review before the Department, and absent argument and evidence to the contrary, the Department determines that dumping is likely to continue if the order were revoked.

Because the Department based this determination on the continued existence of margins above *de minimis* and respondent interested parties' waiver of participation, it is not necessary to address Carus' arguments concerning the attractiveness of the U.S. market, U.S. price premiums for potassium permanganate, Chinese overcapacity and export orientation, or the effects of the Asian economic crisis.

Magnitude of the Margin

In the *Sunset Policy Bulletin,* the Department stated that it will normally provide to the Commission the margin that was determined in the final determination in the original investigation. Further, for companies not specifically investigated or for companies that did not begin shipping until after the order was issued, the Department normally will provide a margin based on the ''all others'' rate from the investigation. (*See* section II.B.1 of the *Sunset Policy Bulletin.*) Exceptions to this policy include the use of a more recently calculated margin, where appropriate, and consideration of duty absorption determinations. (*See* sections II.B.2 and 3 of the *Sunset Policy Bulletin.*)

The Department, in its final determination of sales at less than fair value, published a weighted-average dumping margin for the China National Chemicals Import and Export Corporation (SINOCHEM), the sole Chinese producer/exporter in the original investigation, of 39.63 percent (48 FR 57347, December 29, 1983). The Department also published an ''all others'' rate of 39.63 percent in this same **Federal Register** notice. With respect to duty absorption findings, Carus argues that duty absorption is likely in this case but, because there have been no completed administrative reviews of the order since the 1990 administrative review, the Department has not had the opportunity to address the issue of duty absorption.

In its substantive response, Carus argues that the Department should provide the Commission a more recently calculated margin. Citing the *Sunset Policy Bulletin,* Carus states that ''[a] company may choose to increase dumping in order to maintain or increase market share. As a result, increasing margins may be more representative of a company's behavior in the absence of an order.'' In the original investigation, the Department established a deposit rate of 39.63 percent for SINOCHEM as well as for ''all other'' producers/exporters of Chinese potassium permanganate (48 FR 57347, December 29, 1983). Carus asserts that the 39.63 percent margin established in the investigation was far too low to prevent rapid import growth and continued dumping of PRC-origin product, as well as dramatic increases in the Chinese share of the U.S. market. According to Carus, Chinese imports of the subject merchandise surged by almost 580%—from 432,000 lbs. in 1984 to over 2.1 million lbs. in 1989 to over 2.5 million lbs. in 1990.

In January of 1990, Carus requested an administrative review of Chinese exports of potassium permanganate to the United States. In response to this request, the Department conducted a review and established, on April 29, 1991, a new deposit rate for all PRC producers of 128.94 percent. In addition, the Department established a new deposit rate for four of the seven known Hong Kong resellers of this product. According to Carus' information, imports of the subject merchandise then decreased by almost 70 percent, from 2,560,700 lbs. in 1990 to 861,051 lbs. in 1991.

Nevertheless, by 1993, imports of Chinese potassium permanganate had increased to 2,441,453 lbs. and had recaptured over 9 percent of the U.S. market, almost as much of the U.S. market as Chinese producers/exporters had held just prior to the imposition of the order. Carus claims this resurgence in Chinese imports was attributed to a ''loophole'' evident in the 1991 Final Results. Specifically, the ''all others'' rate of 39.63 percent was still being applied as a deposit rate to previously unnamed Hong Kong resellers, not all of whom could be identified for review. Carus argues that the retention of the 39.63 percent rate for Hong Kong resellers subject to the ''all others'' rate, coupled with the willingness and ability of Chinese producers/exporters to dump, allowed substantial amounts of PRC-origin potassium permanganate to be transshipped through Hong Kong resellers and sold in the U.S. at below fair market value. In the 1991 Final Results, the Department clarified that, in cases involving non-market economies, an ''all others'' cash deposit rate is not appropriate because any non-market economy country firm must show that it is entitled to a separate rate before a rate other than the non-market economy country-wide rate can be assigned to it, and any intermediate country reseller is properly assigned the rate for its producer unless the reseller affirmatively shows that the merchandise has not simply been transshipped. 59 FR 26630.[6] Because no third country reseller established, during the 1990 administrative review or since, that its merchandise was not being transshiped, such that the first exporter ''to the United States'' was properly deemed to be the PRC exporter, the ''all others'' loophole was eliminated in the May 23, 1994 final results of the 1990 administrative review, which established a 128.94 percent deposit rate for all shipments of Chinese potassium permanganate. 59 FR 26625.

Carus submits that the history of this case shows that the margin established in the original investigation was insufficient to prevent an influx of Chinese potassium permanganate and insufficient to prevent Chinese producers/exporters' attempts at increasing market share in the United States through dumping. Carus argues that, between 1984 and 1990, Chinese producers/exporters of potassium permanganate increased their share of the U.S. market by 340 percent, from 2.5 percent to 8.5 percent. December 3, 1998 Substantive Response of Carus. Furthermore, Carus argues that the ''loophole'' created by the exclusion of certain Hong Kong resellers from the

[5] *See Potassium Permanganate from The People's Republic of China; Final Results of Antidumping Duty Administrative Review,* 59 FR 26625 (May 23, 1994).

[6] *See also Yue Pak* v. *United States,* Slip Op. 96–65 (CIT April 18, 1996), *aff'd* 111 F. 3rd 142 (Fed. Cir. 1997).

128.94 percent margin assigned to Chinese exporters in the 1989 administrative review again permitted dramatic increases in Chinese imports of the subject merchandise and the virtual recapture of the Chinese percentage of the U.S. potassium permanganate market.

Therefore, Carus argues, the margin determined in the original investigation does not reflect current Chinese pricing behavior or present levels of globally-traded input prices. In addition, Carus argues the changes in the methodology used by the Department in the calculation of margins renders the margin from the original investigation suspect.

The Department agrees with Carus' argument concerning the choice of the margin rate to report to the Commission. An examination of the margin history of the order as well as an examination of import statistics of the subject merchandise, as provided in U.S. Census Bureau IM146 reports, confirms the scenario outlined by Carus. From 1984, the date the first margins were established for this proceeding (49 FR 3897, January 31, 1984), to 1990, import volumes of the subject merchandise swelled, increasing by almost 600 percent. During this period, a cash deposit rate of 39.64 percent was in effect. In 1991, in an administrative review requested by Carus, the Department established a new deposit rate of 128.94 percent for producers of the subject merchandise from the PRC and for certain named third country resellers (56 FR 19640, April 29, 1991). Import volumes fell substantially in 1991, by almost 70 percent, but then rebounded by 1993, the year immediately preceding the final results of the 1990 administrative review (59 FR 26625, May 23, 1994). In May of 1994, in the Final Results of the 1990 administrative review, the Department established a rate of 128.94 percent for all potassium permanganate of Chinese origin, whether shipped directly from the PRC or transshipped through a third country reseller. Following the establishment of this more inclusive margin rate, shipments of potassium permanganate fell dramatically, and have not exceeded 50,000 lbs. in any year since 1996.

The Department believes that the increase in import volumes and market share between the imposition of the order and the Final Results in the 1989 administrative review (56 FR 19640, April 29, 1991) reflect the willingness and ability of Chinese producers/exporters to dump this product despite the margin rate established by the Department in the original investigation. Furthermore, the continuation of dumping and the virtual recapture of market share between the final results in the 1989 review and those in the 1990 review reflects attempts by Chinese producers/exporters to circumvent the order by transshipping the subject merchandise through third country resellers with lower deposit rates. This is evidenced by the dramatic reduction in import volumes following the 1990 administrative review (59 FR 26625, May 23, 1994) in which a single rate was established for all potassium permanganate of Chinese origin, regardless of the interim shipping location, absent a showing that either the Chinese exporter was entitled to a separate rate or the third country reseller was not merely engaged in transshipment. This more inclusive margin determination has apparently reduced the ability of Chinese producers/exporters to circumvent the order.

According to the *Sunset Policy Bulletin*, ''a company may choose to increase dumping in order to maintain or increase market share. As a result, increasing margins may be more representative of a company's behavior in the absence of an order.'' Therefore, the Department finds that this most recent rate is the most probative of the behavior of Chinese producers/exporters of potassium permanganate if the order were revoked. As a result, the Department is not addressing current Chinese pricing behavior or changes in methodologies used by the Department in its margin calculations. The Department will report to the Commission the country-wide rate from the administrative review for the period January 1, 1990 through December 31, 1990 (59 FR 26625, May 23, 1994) as contained in the Final Results of Review section of this notice.

Final Results of Review

As a result of this review, the Department finds that revocation of the antidumping order would likely lead to continuation or recurrence of dumping at the margins listed below:

Manufacturer/exporter	Margin (percent)
Country-wide rate for the People's Republic of China	128.94

This notice serves as the only reminder to parties subject to administrative protective order (APO) of their responsibility concerning the disposition of proprietary information disclosed under APO in accordance with 19 CFR 351.305 of the Department's regulations. Timely notification of return/destruction of APO materials or conversion to judicial protective order is hereby requested. Failure to comply with the regulations and the terms of an APO is a sanctionable violation.

This five-year (''sunset'') review and notice are in accordance with sections 751(c), 752, and 777(i)(1) of the Act.

Dated: April 1, 1999.

Robert S. LaRussa

Assistant Secretary for Import Administration.

[FR Doc. 99–8624 Filed 4–6–99; 8:45 am]

BILLING CODE 3510–DS–P

DEPARTMENT OF COMMERCE

International Trade Administration

[A–570–825]

Final Results of Expedited Sunset Review: Sebacic Acid from the People's Republic of China

AGENCY: Import Administration, International Trade Administration, Department of Commerce.

ACTION: Notice of Final Results of Expedited Sunset Review: Sebacic Acid from the People's Republic of China.

SUMMARY: On December 2, 1998, the Department of Commerce (''the Department'') initiated a sunset review of the antidumping order on sebacic acid from the People's Republic of China (63 FR 66527) pursuant to section 751(c) of the Tariff Act of 1930, as amended (''the Act''). On the basis of a notice of intent to participate and substantive comments filed on behalf of the domestic industry and inadequate response (in this case, no response) from respondent interested parties, the Department determined to conduct an expedited review. As a result of this review, the Department finds that revocation of the antidumping order would be likely to lead to continuation or recurrence of dumping at the levels indicated in the Final Results of Review section of this notice.

FOR FURTHER INFORMATION CONTACT: Scott E. Smith or Melissa G. Skinner, Office of Policy for Import Administration, International Trade Administration, U.S. Department of Commerce, 14th Street and Constitution Avenue, NW, Washington, D.C. 20230; telephone: (202) 482–6397 or (202) 482–1560, respectively.

EFFECTIVE DATE: April 7, 1999.

Statute and Regulations

This review was conducted pursuant to sections 751(c) and 752 of the Act.

The Department's procedures for the conduct of sunset reviews are set forth in *Procedures for Conducting Five-year (''Sunset'') Reviews of Antidumping and Countervailing Duty Orders,* 63 FR 13516 (March 20, 1998) (''*Sunset Regulations*''). Guidance on methodological or analytical issues relevant to the Department's conduct of sunset reviews is set forth in the Department's Policy Bulletin 98:3—*Policies Regarding the Conduct of Five-year (''Sunset'') Reviews of Antidumping and Countervailing Duty Orders; Policy Bulletin,* 63 FR 18871 (April 16, 1998) (''*Sunset Policy Bulletin*'').

Scope

The merchandise subject to this antidumping order is sebacic acid (all grades), a dicarboxylic acid with the formula $(CH_2)_8(COOH)_2$, which include but are not limited to CP Grade (500ppm maximum ash, 25 maximum APHA color), Purified Grade (1000ppm maximum ash, 50 maximum APHA color), and Nylon Grade (500ppm maximum ash, 70 maximum ICV color). The principal difference between the grades is the quantity of ash and color. Sebacic acid contains a minimum of 85 percent dibasic acids of which the predominant species is the C_{10} dibasic acid. Sebacic acid is sold generally as a free-flowing powder/flake.

Sebacic acid has numerous industrial uses, including the production of nylon 6/10 (a polymer used for paintbrush and toothbrush bristles and paper machine felts), plasticizers, esters, automotive coolants, polyamides, polyester castings and films, inks and adhesives, lubricants, and polyurethane castings and coatings.

Sebacic acid is currently classifiable under subheading 2917.13.00.30 of the Harmonized Tariff Schedule of the United States (HTSUS). The HTSUS item number is provided for convenience and U.S. Customs purposes. The written product description of the scope of this order remains dispositive.

This review covers imports from all manufacturers and exporters of Chinese sebacic acid.

Background

On December 2, 1998, the Department initiated a sunset review of the antidumping order on sebacic acid from the People's Republic of China (63 FR 66527), pursuant to section 751(c) of the Act. The Department received a Notice of Intent to Participate on behalf of Union Camp Corporation (''Union Camp'') on December 8, 1998, within the deadline specified in section 351.218(d)(1)(i) of the *Sunset Regulations.* Union Camp claimed interested party status under 19 U.S.C. 1677(9)(C) as a domestic producer of sebacic acid. In addition, Union Camp indicated that it is the sole domestic producer of sebacic acid and was the original petitioner in the underlying investigation. We received a complete substantive response from Union Camp on January 4, 1999, within the 30-day deadline specified in the *Sunset Regulations* under section 351.218(d)(3)(i). We did not receive a substantive response from any respondent interested party to this proceeding. As a result, pursuant to 19 CFR 351.218(e)(1)(ii)(C), the Department determined to conduct an expedited, 120-day, review of this order.

Determination

In accordance with section 751(c)(1) of the Act, the Department conducted this review to determine whether revocation of the antidumping order would be likely to lead to continuation or recurrence of dumping. Section 752(c) of the Act provides that, in making this determination, the Department shall consider the weighted-average dumping margins determined in the investigation and subsequent reviews and the volume of imports of the subject merchandise for the period before and the period after the issuance of the antidumping order, and shall provide to the International Trade Commission (''the Commission'') the magnitude of the margin of dumping likely to prevail if the order is revoked.

The Department's determinations concerning continuation or recurrence of dumping and the magnitude of the margin are discussed below. In addition, parties' comments with respect to continuation or recurrence of dumping and the magnitude of the margin are addressed within the respective sections below.

Continuation or Recurrence of Dumping

Drawing on the guidance provided in the legislative history accompanying the Uruguay Round Agreements Act (''URAA''), specifically the Statement of Administrative Action (''the SAA''), H.R. Doc. No. 103–316, vol. 1 (1994), the House Report, H.R. Rep. No. 103–826, pt.1 (1994), and the Senate Report, S. Rep. No. 103–412 (1994), the Department issued its *Sunset Policy Bulletin* providing guidance on methodological and analytical issues, including the bases for likelihood determinations. In its *Sunset Policy Bulletin,* the Department indicated that determinations of likelihood will be made on an order-wide basis (*see* section II.A.3). In addition, the Department indicated that normally it will determine that revocation of an antidumping order is likely to lead to continuation or recurrence of dumping where (a) dumping continued at any level above *de minimis* after the issuance of the order, (b) imports of the subject merchandise ceased after the issuance of the order, or (c) dumping was eliminated after the issuance of the order and import volumes for the subject merchandise declined significantly (*see* section II.A.3).

In addition to guidance on likelihood provided in the *Sunset Policy Bulletin* and legislative history, section 751(c)(4)(B) of the Act provides that the Department shall determine that revocation of an order is likely to lead to continuation or recurrence of dumping where a respondent interested party waives its participation in the sunset review. In the instant review, the Department did not receive a response from any respondent interested party. Pursuant to section 351.218(d)(2)(iii) of the *Sunset Regulations,* this constitutes a waiver of participation.

The antidumping duty order on sebacic acid from the People's Republic of China was published in the **Federal Register** on July 14, 1994 (59 FR 35909). Since this time, the Department has conducted three administrative reviews.[1] The order remains in effect for all manufacturers and exporters of the subject merchandise.

In its substantive response, Union Camp argues that revocation of the order will likely lead to increased imports of sebacic acid from the PRC at dumped prices (*see* January 4, 1999 Substantive Response of Union Camp at 3). With respect to whether dumping continued at any level above *de minimis* after the issuance of the order, Union Camp states that for each of the participating companies, dumping has continued after the issuance of the order (*see* January 4, 1999 Substantive Response of Union Camp at 4). Union Camp notes that during the first and second administrative reviews, Tianjin Chemicals Import & Export Corp.'s dumping margin was zero and, during the third administrative review, SINOCHEM International Chemical Co.'s dumping margin was *de minimis.*

[1] *See Sebacic Acid from The People's Republic of China; Final Results of Antidumping Duty Administrative Review,* 62 FR 10530 (March 7, 1997); *Sebacic Acid from The People's Republic of China; Final Results of Antidumping Duty Administrative Review,* 62 FR 65674 (December 15, 1997); and *Sebacic Acid from The People's Republic of China; Final Results of Antidumping Duty Administrative Review,* 63 FR 43373 (August 13, 1998).

Union Camp argues, however, as stated in the *Sunset Policy Bulletin*, that a zero or *de minimis* margin, in itself, will not require the Department to determine that continuation or recurrence is not likely.

In addition, Union Camp asserts that Chinese sebacic acid is being dumped in the European market. By comparing Union Camp's current selling price in the European Union to the Chinese selling price (based on information received from Union Camp's European customers and publicly quoted unit prices), Union Camp believes that sebacic acid of Chinese origin is being dumped in Europe. Furthermore, Union Camp asserts that this fact suggests that if the U.S. dumping order on Chinese sebacic acid were revoked, Chinese exporters of sebacic acid would likely reduce their sales prices and increase their dumping in the U.S.

With respect to whether imports of the subject merchandise ceased after the issuance of the order, Union Camp, citing Commerce IM145 reports, argues that imports of Chinese sebacic acid dropped significantly with the imposition of dumping duties under the order in 1994 and continued to decline in 1995. Union Camp notes that, during 1996 and 1997, imports of the subject merchandise increased slightly, however, it asserts this increase can most likely be attributed to an increase in the domestic consumption of sebacic acid beginning in 1995.

In conclusion, Union Camp argued that the Department should determine that there is a likelihood that dumping would continue were the order revoked because (1) dumping margins have existed for most known exporters of the subject merchandise during the entire life of the order, (2) it believes that Chinese sebacic acid is being dumped in Europe and (3) shipments of subject merchandise have also continued throughout the life of the order and this suggests that, if the U.S. order were revoked, dumping of subject merchandise would increase in the U.S.

As discussed in Section II.A.3 of the *Sunset Policy Bulletin*, the SAA at 890, and the House Report at 63–64, if companies continue dumping with the discipline of an order in place, the Department may reasonably infer that dumping would continue if the discipline were removed. Although two of the four known Chinese producers have, at various times over the life of the order, received zero or *de minimis* margins, none has consistently eliminated dumping while increasing or maintaining market share. Dumping margins above *de minimis* levels continue to exist for shipments of the subject merchandise from three of the four known Chinese producers.[2]

Consistent with section 752(c) of the Act, the Department also considered the volume of imports before and after issuance of the order. The import statistics provided by Union Camp, and confirmed by the Department, on imports of the subject merchandise between 1992 and 1997, demonstrate that, while imports of the subject merchandise fell sharply after the imposition of the order, they continue.

Based on this analysis, the Department finds that the existence of dumping margins after the issuance of the order is highly probative of the likelihood of continuation or recurrence of dumping. Deposit rates above a *de minimis* level continue in effect for exports of the subject merchandise by three of the four known Chinese manufacturers/exporters. Therefore, given that dumping has continued over the life of the order, respondent interested parties have waived their right to participate in this review before the Department and, absent argument and evidence to the contrary, the Department determines that dumping is likely to continue if the order were revoked.

Because the Department based this determination on the continued existence of margins above *de minimis*, the continuation of dumped imports and respondent interested parties' waiver of participation, it is not necessary to address Union Camp's arguments concerning possible dumping of Chinese sebacic acid in Europe.

Magnitude of the Margin

In the *Sunset Policy Bulletin*, the Department stated that it will normally provide to the Commission the margin that was determined in the final determination in the original investigation. Further, for companies not specifically investigated or for companies that did not begin shipping until after the order was issued, the Department normally will provide a margin based on the ''all others'' rate from the investigation. (*See* section II.B.1 of the *Sunset Policy Bulletin*.) Exceptions to this policy include the use of a more recently calculated margin, where appropriate, and consideration of duty absorption determinations. (*See* sections II.B.2 and 3 of the *Sunset Policy Bulletin*.)

The Department, in its final determination of sales at less than fair value, published weighted-average dumping margins for four Chinese producers/exporters of the subject merchandise ranging from 82.66 percent to 243.40 percent (59 FR 28053, May 31, 1994).[3] The Department also published an ''all others'' rate in this final determination.[4] We note that, to date, the Department has not issued any duty absorption findings in this case.

In its substantive response, citing the *Sunset Policy Bulletin*, Union Camp states that the Department normally will provide the Commission with the dumping margins ''from the investigation, because that is the only calculated rate that reflects the behavior of exporters . . . without the discipline of the order . . . in place.'' Union Camp argues that the Department, consistent with the *Sunset Policy Bulletin*, should provide the Commission with the final margins from the original investigation as the magnitude of dumping margin likely to prevail if the order were revoked (*see* January 4, 1999 Substantive Response of Union Camp at 7).

The Department agrees with Union Camp's argument concerning the choice of the margin rate to report to the Commission. An examination of the margin history of the order as well as an examination of import statistics of the subject merchandise, as provided in U.S. Department of Commerce Trade Statistics data, confirms that imports of the subject merchandise continue to exist.

Our review of the margin history over the life of the order demonstrates that there have been fluctuations in the margins for some producers/exporters of the subject merchandise. The Department, however, does not view these fluctuations as demonstrating a consistent pattern of behavior. Therefore, in accordance with the *Sunset Policy Bulletin* and absent an argument that a more recently

[2] *See Sebacic Acid from The People's Republic of China; Final Results of Antidumping Duty Administrative Review*, August 13, 1998 (63 FR 43373).

[3] Pursuant to court remand, several of the company-specific margins were changed (*see Final Results of Redetermination Pursuant to Court Remand, Union Camp Corporation* v. *United States, Consol. Court No. 94–08-00480, Slip Op. 96–123 (August 5, 1996)).*

[4] The Department actually published a ''PRC country-wide rate'' and defined this as the rate that applies to all PRC companies not specifically listed in the **Federal Register** notice (*see Notice of Final Determination of Sales at Less Than Fair Value: Sebacic Acid from The People's Republic of The People's Republic of China*, 59 FR 28053 (May 31, 1994)). This definition indicates that the ''PRC country-wide rate'', in this case, is the same as the ''all others'' rate normally identified by the Department. In addition, pursuant to court remand, this ''all others'' rate was changed (*see Final Results of Redetermination Pursuant to Court Remand, Union Camp Corporation* v. *United States, Consol. Court No. 94–08–00480, Slip Op. 96–123 (August 5, 1996)).*

calculated margin is more indicative of the margin likely to prevail if the order were revoked, we determine that the original margins calculated in the Department's original investigation are probative of the behavior of Chinese producers and exporters of sebacic acid if the order were revoked. We will report to the Commission the company-specific and all others rates contained in the Final Results of Review section of this notice.

Final Results of Review

As a result of this review, the Department finds that revocation of the antidumping order would likely lead to continuation or recurrence of dumping at the margins listed below: [5]

Manufacturer/exporter	Margin (percent)
SINOCHEM Jiangsu Import & Export Corp	141.97
Tianjin Chemical Import & Export Corp	118.00
SINOCHEM International Chemical Co	82.66
Guangdong Chemical Import & Export Corp	102.99
All Others	243.40

This notice serves as the only reminder to parties subject to administrative protective order (APO) of their responsibility concerning the disposition of proprietary information disclosed under APO in accordance with 19 CFR 351.305 of the Department's regulations. Timely notification of return/destruction of APO materials or conversion to judicial protective order is hereby requested. Failure to comply with the regulations and the terms of an APO is a sanctionable violation.

This five-year (''sunset'') review and notice are in accordance with sections 751(c), 752, and 777(i)(1) of the Act.

Dated: April 1, 1999.

Robert S. LaRussa,

Assistant Secretary for Import Administration.

[FR Doc. 99–8622 Filed 4–6–99; 8:45 am]

BILLING CODE 3510–DS–P

[5] The margins in this section of the notice reflect the changes to the original margins pursuant to court remand (*see Final Results of Redetermination Pursuant to Court Remand, Union Camp Corporation* v. *United States, Consol. Court No. 94–08–00480, Slip Op. 96–123 (August 5, 1996)).*

DEPARTMENT OF COMMERCE

International Trade Administration

University of Michigan; Notice of Decision on Application for Duty-Free Entry of Scientific Instrument

This is a decision pursuant to Section 6(c) of the Educational, Scientific, and Cultural Materials Importation Act of 1966 (Pub. L. 89–651, 80 Stat. 897; 15 CFR part 301). Related records can be viewed between 8:30 A.M. and 5:00 P.M. in Room 4211, U.S. Department of Commerce, 14th and Constitution Avenue, N.W., Washington, D.C.

Docket Number: 99–001. *Applicant:* The Regents of the University of Michigan, Ann Arbor, MI 48109–0602. *Instrument:* Electron Microscope, Model H–7500. *Manufacturer:* Hitachi Scientific Instruments, Japan. *Intended Use:* See notice at 64 FR 9981, March 1, 1999. Order Date: April 23, 1998.

Comments: None received. *Decision:* Approved. No instrument of equivalent scientific value to the foreign instrument, for such purposes as the instrument is intended to be used, was being manufactured in the United States at the time the instrument was ordered. *Reasons:* The foreign instrument is a conventional transmission electron microscope (CTEM) and is intended for research or scientific educational uses requiring a CTEM. We know of no CTEM, or any other instrument suited to these purposes, which was being manufactured in the United States at the time of order of the instrument.

Frank W. Creel,

Director, Statutory Import Programs Staff.

[FR Doc. 99–8619 Filed 4–6–99; 8:45 am]

BILLING CODE 3510–DS–P

DEPARTMENT OF COMMERCE

International Trade Administration

Application for Duty-Free Entry of Scientific Instrument

Pursuant to Section 6(c) of the Educational, Scientific and Cultural Materials Importation Act of 1966 (Pub. L. 89–651; 80 Stat. 897; 15 CFR part 301), we invite comments on the question of whether an instrument of equivalent scientific value, for the purposes for which the instrument shown below is intended to be used, is being manufactured in the United States.

Comments must comply with 15 CFR 301.5(a)(3) and (4) of the regulations and be filed within 20 days with the Statutory Import Programs Staff, U.S. Department of Commerce, Washington, D.C. 20230. Application may be examined between 8:30 A.M. and 5:00 P.M. in Room 4211, U.S. Department of Commerce, 14th Street and Constitution Avenue, N.W., Washington, D.C.

Docket Number: 99–003. *Applicant:* Louisiana State University, Mechanical Engineering Department, Nicholson Ext., Baton Rouge, LA 70803. *Instrument:* Electron Microscope, Model JEM–2010. *Manufacturer:* JEOL Ltd., Japan. *Intended Use:* The instrument will be used extensively in the study of microstructures, surfaces, and the structural and compositional characteristics of materials. The research areas of interest include but are not limited to the following: (1) fundamental issues of stress corrosion cracking phenomena and specifically directed toward understanding the nature of the embrittlement mechanism, (2) surface modification processes and more specifically with the processing-microstructure-property relationship of modified surfaces and thin films, (3) exploring the possibility to grow thick amorphous alloy layers by solid-state interdiffusion reactions in diffusion couples assisted by bombardment of energetic particles (plasma or ion beam), (4) understanding how and why solid-state alloying and amorphization can be achieved in some binary systems with relatively large positive heat of mixing (i.e., systems immiscible in equilibrium) and (5) studying the consolidation and properties of nanocrystalline metals, oxides and noncomposites. Application accepted by Commissioner of Customs: March 19, 1999.

Frank W. Creel,

Director, Statutory Import Programs Staff.

[FR Doc. 99–8620 Filed 4–6–99; 8:45 am]

BILLING CODE 3510–DS–P

DEPARTMENT OF COMMERCE

International Trade Administration

Request for Comments on the Asian Pacific Economic Cooperation (APEC) Electronic Commerce Steering Group Work Plan

AGENCY: International Trade Administration, Commerce.

ACTION: Notice of request for public comment.

SUMMARY: The Department of Commerce/International Trade Administration (DOC/ITA) seeks comment on the APEC Electronic Commerce Steering Group work program.

DATES: Comments are due no later than April 21, 1999.

ADDRESSES: Comments may be submitted by e-mail to the following e-mail address <sabrina__montes@ita.doc.gov>. All e-mail submissions should include the following text in the subject line of the message: ''APEC Electronic Commerce Steering Group work plan—Comment.'' The body of the message should indicate the name and affiliation of the correspondent and the name and version of the word processing program used to create the document. Files compatible with the Windows versions of MS Word or WordPerfect word processing programs are preferred. Otherwise, please submit comments in ASCII text format. To enable prompt review and accessibility to the public, DOC/ITA prefers submission of comments in electronic form by e-mail.

DOC/ITA will accept comments submitted on 3½ inch floppy disc. The disc label should include the name and affiliation of the correspondent and the name and version of the word processing program used to create the document. DOC/ITA will also accept comments submitted in hard copy. Individuals or organizations that submit comments in hard copy must provide twenty (20) copies. Discs and hard copy comments must be submitted to Sabrina Montes, Office of Trade and Economic Analysis, International Trade Administration, U.S. Department of Commerce, HCHB Stop 2815, 14th Street & Constitution Avenue, NW, Washington, DC 20230. Tel.: 202–482–5242. Fax: 202–482–4614.

If the submission contains business confidential information, a justification as to why the information contained in the submission should be treated confidentially must be included in the submission. Submissions containing business confidential information must be clearly marked ''Confidential'' at the top and bottom of the cover page (or letter) and each page of the submission. A version that does not contain confidential information should also be submitted and clearly marked ''public version'' at the top and bottom of each page.

Comments should clearly state the position taken and should describe the specific information supporting that position. Comments must be made in English. All submissions should include the name and affiliation of the correspondent.

Written comments submitted in connection with this request, except for information that is business confidential, will be available for public inspection on the Internet at <http://infoserv2.ita.doc.gov/otea/apec/fedreg.nsf> or in hard copy at the U.S. Department of Commerce, 14th Street & Constitution Avenue, NW, Washington, DC 20230. An appointment to review the file may be made by calling Sabrina Montes, Office of Trade and Economic Analysis, International Trade Administration, Tel.: 202–482–5242.

Respondents that provide an e-mail address with their submission will be added to an e-mail list for future information.

FOR FURTHER INFORMATION CONTACT: Jonathan Menes, Director Office of Trade and Economic Analysis/Co-Chair APEC Electronic Commerce Steering Group (202–482–5145).

SUPPLEMENTARY INFORMATION: In Vancouver, November 1997, Leaders of APEC member economies brought the importance of electronic commerce to the fore by directing Ministers to

> undertake a work program on electronic commerce in the region, taking into account relevant activities of other international fora, and to report to us in Kuala Lumpur. This initiative should recognize the leading role of the business sector and promote a predictable and consistent legal and regulatory environment that enables all APEC economies to reap the benefits of electronic commerce.

In November 1998, the APEC Ministers approved a Blueprint for Action on electronic commerce that sets out a framework for electronic commerce in APEC, outlines a work plan, and establishes a steering group to coordinate electronic commerce activities within APEC fora and to implement the Blueprint work program. The Steering Group membership consists of representatives from all APEC economies. The Steering Group will involve relevant APEC working groups and sub-fora, as well as business sector experts in accordance with APEC guidelines on business participation.

DOC/ITA seeks comment on the APEC Electronic Commerce Steering Group work program, which is outlined in the Blueprint for Action on electronic commerce <http://www.dfat.gov.au/apec/ecom/>.

The Blueprint for Action on electronic commerce advocates that APEC economies ''endeavor to work together to build trust and confidence; enhance government use [of electronic commerce]; intensify community outreach; promote technical cooperation and experience exchange; where appropriate, work toward eliminating impediments to its uptake; and develop seamless legal, technical, operating and trading environments to facilitate the growth and development of electronic commerce.''

Specific initiatives identified in the work program include:

- Developing measures and indicators of the uptake, use, and flows of e-commerce;
- Assessing impediments to economic commerce in APEC and reviewing the economic costs that inhibit electronic commerce, including those imposed by regulatory or market conditions;
- Working on the financial aspects of electronic commerce;
- Expanding a case history database to facilitate and support electronic commerce activities by small and medium enterprises (SMEs), government, and business/public sector partnerships;
- Exploring economic and technical cooperation to facilitate the uptake, use, and maximization of the benefits of electronic commerce in APEC member economies;
- Tasking authentication experts, including business sector experts, to study the range of business models for electronic authentication. This work should include examining the potential role of mechanisms, such as cross-certification and the use of a root certification authority, to promote inter-operability and trust and to facilitate cross-border electronic commerce;
- Working with UNCITRAL and other international fora to advance, where appropriate, the work on the legal foundations for a seamless system of cross-border electronic commerce;
- Establishing APEC electronic virtual commerce/multimedia resource network; and
- Developing paperless trading by 2005, if possible.

Work in many of these areas is already underway in various APEC fora, including the Telecommunications Working Group, the Transportation Working Group, the Industrial Science and Technology Working Group, and the Committee on Trade and Investment and its subcommittee on Customs Procedures.

Dated: March 29, 1999.

Jonathan C. Menes,

Director, Office of Trade and Economic Analysis, Co-Chair APEC Electronic Commerce Steering Group, International Trade Administration, U.S. Department of Commerce.

[FR Doc. 99–8425 Filed 4–6–99; 8:45 am]

BILLING CODE 3510–DR–P

DEPARTMENT OF COMMERCE

International Trade Administration

[C–428–812]

Certain Hot-Rolled Lead and Bismuth Carbon Steel Products From Germany: Preliminary Results of Countervailing Duty Administrative Review

AGENCY: Import Administration, International Trade Administration, Department of Commerce

ACTION: Notice of Preliminary Results of Countervailing Duty Administrative Review

SUMMARY: The Department of Commerce (the Department) is conducting an administrative review of the countervailing duty order on certain hot-rolled lead and bismuth carbon steel products from Germany for the period January 1, 1997 through December 31, 1997. For information on the net subsidy for the reviewed company as well as for non-reviewed companies, please see the *Preliminary Results of Review* section of this notice. If the final results remain the same as these preliminary results of administrative review, we will instruct the U.S. Customs Service to assess countervailing duties as detailed in the *Preliminary Results of Review* section of this notice. Interested parties are invited to comment on these preliminary results. (See the Public Comment section of this notice.)

EFFECTIVE DATE: April 7, 1999.

FOR FURTHER INFORMATION CONTACT: Eric B. Greynolds or Robert Copyak, Group II, Office of AD/CVD Enforcement VI, Import Administration, U.S. Department of Commerce, Room 4012, 14th Street and Constitution Avenue, N.W., Washington, D.C. 20230; telephone (202) 482–2786.

SUPPLEMENTARY INFORMATION:

Background

On March 22, 1993, the Department published in the **Federal Register** (58 FR 15325) the countervailing duty order on certain hot-rolled lead and bismuth carbon steel products from Germany. On March 11, 1998, the Department published a notice of ''Opportunity to Request an Administrative Review'' (63 FR 11868) of this countervailing duty order. We received a timely request for review from Saarstahl AG (Saarstahl), the respondent company to this proceeding. On April 24, 1998, we initiated the review, covering the period January 1, 1997 through December 31, 1997, (63 FR 20378). On April 28, 1999, Inland Steel Bar Company and USS/KOBE Steel Co. (petitioners) requested that the Department conduct verification of information submitted on the record in all questionnaire responses.

In accordance with 19 CFR 351.213(b), this review covers only those producers or exporters for which a review was specifically requested. Accordingly, this review covers Saarstahl AG (Saarstahl). This review also covers five programs. On November 19, 1998, we extended the period for completion of the preliminary results pursuant to section 751(a)(3) of the Tariff Act of 1930, as amended. *See Hot-Rolled Lead and Bismuth Carbon Steel Products from Germany: Extension of the Time Limit for Preliminary Results of Countervailing Duty Administrative Review* (63 FR 64235). The deadline for the final results of this review is no later than 120 days from the date on which these preliminary results are published in the **Federal Register**.

Applicable Statute

Unless otherwise indicated, all citations to the statute are references to the provisions of the Tariff Act of 1930, as amended by the Uruguay Round Agreements Act (URAA) effective January 1, 1995 (the Act). The Department is conducting this administrative review in accordance with section 751(a) of the Act. All citations to the Department's regulations reference 19 CFR Part 351(April 1998), unless otherwise indicated.

Scope of the Review

The products covered by this investigation are hot-rolled bars and rods of nonalloy or other alloy steel, whether or not descaled, containing by weight 0.03 percent or more of lead or 0.05 percent or more of bismuth, in coils or cut lengths, and in numerous shapes and sizes. Excluded from the scope of this investigation are other alloy steels (as defined by the Harmonized Tariff Schedule of the United States (HTSUS) Chapter 72, note 1 (f)), except steels classified as other alloy steels by reasons of containing by weight 0.4 percent or more of lead, or 0.1 percent or more of bismuth, tellurium, or selenium. Also excluded are semi-finished steels and flat-rolled products. Most of the products covered in this review are provided for under subheadings 7213.20.00.00 and 7214.30.00.00 of the HTSUS. Small quantities of these products may also enter the United States under the following HTSUS subheadings: 7213.31.30.00; 7213.31.60.00; 7213.39.00.30; 7213.39.00.60; 7213.39.00.90; 7213.91.30.00; 7213.91.45.00; 7213.91.60.00; 7213.99.00; 7214.40.00.10, 7214.40.00.30, 7214.40.00.50; 7214.50.00.10; 7214.50.00.30, 7214.50.00.50; 7214.60.00.10; 7214.60.00.30; 7214.60.00.50; 7214.91.00; 7214.99.00; 7228.30.80.00; and 7228.30.80.50. HTSUS subheadings are provided for convenience and Customs purposes. The written description of the scope of this proceeding is dispositive.

Duty Absorption

On April 28, 1998, the Department received a request from petitioners to conduct a duty absorption review to determine whether Saarstahl absorbed countervailing duties. The issue of whether it is appropriate to examine duty absorption in the context of a countervailing duty review was considered in the 1997 administrative review of the countervailing duty order on lead and bismuth carbon steel products from the United Kingdom. The Department concluded that, because there is no relationship between the amount of duties absorbed and the extent of government subsidization that will take place in the future, it is not appropriate to examine duty absorption in a countervailing duty reviews. Therefore, we are not conducting a duty absorption review in this administrative review. A copy of the decision memorandum which elaborates the Department's rationale with regard to this issue (*see* memorandum through Holly A. Kuga, Acting Deputy Assistant Secretary for Group II, to Robert S. LaRussa, Assistant Secretary for Import Administration, dated March 18, 1999, a public document on file in the Central Records Unit, Room B–099 of the Main Commerce Building) has been placed on the record of this administrative review as a public document from the team to the file, dated March 25, 1999.

Subsidies Valuation Information

Allocation Period

In *British Steel plc.* v. *United States*, 879 F.Supp. 1254 (February 9, 1995) (*British Steel I*), the U.S. Court of International Trade (the Court) ruled against the allocation period methodology for non-recurring subsidies that the Department had employed for the past decade, a methodology that was articulated in the *General Issues Appendix* appended to *Final Affirmative Countervailing Duty Determination: Certain Steel Products from Austria;* 58 FR 37217 (July 9, 1993) (*GIA*). In accordance with the Court's decision on remand, the Department determined that the most reasonable

method of deriving the allocation period for nonrecurring subsidies is a company-specific AUL of non-renewable physical assets. This remand determination was affirmed by the Court on June 4, 1996. *British Steel plc.* v. *United States,* 929 F.Supp 426, 439 (CIT 1996) (*British Steel II*).

However, in administrative reviews where the Department examines non-recurring subsidies received prior to the POR which have been countervailed based on an allocation period established in an earlier segment of the proceeding, it is not practicable to reallocate those subsidies over a different period of time. Since the countervailing duty rate in earlier segments of the proceeding was calculated based on a certain allocation period and resulted in a certain benefit stream, redefining the allocation period in later segments of the proceeding would entail taking the original grant amount and creating an entirely new benefit stream for that grant. Such a practice may lead to an increase or decrease in the total amount countervailed and, thus, would result in the possibility of over-or under-countervailing the actual benefit. In this administrative review, the Department is considering non-recurring subsidies previously allocated in the initial investigation. Therefore, for purposes of these final results, the Department is using the original allocation period assigned to each non-recurring subsidy received prior to the POR. *See, e.g., Final Results of Countervailing Duty Administrative Review: Industrial Phosphoric Acid from Israel,* 64 FR 2879 (January 19, 1999) and *Final Results of Countervailing Duty Administrative Review: Certain Carbon Steel Products from Sweden,* 62 FR 16549 (April 7, 1997).

Discount Rates

Pursuant to the *Final Results of Redetermination Pursuant to Court Remand Regarding The Privatization in Germany: Saarstahl Ag* v. *United States,* Consol. Ct. No. 93–04–00219 (June 30, 1997) (*Remand Determination*), we find that Saarstahl was uncreditworthy in 1989 and, therefore, have applied the uncreditworthy discount rate from the *Remand Determination* for Saarstahl's calculations.

Change in Ownership

(I) Background

In the investigation of this proceeding, we examined Saarstahl's changes in ownership prior to 1991. Specifically, in 1986, Arbed, a company owned by the Government of Luxemburg, transferred 76 percent of Saarstahl's shares to the Government of Saarland (GOS), making Saarstahl a majority state-owned company. The GOS then began a search for a new investor for Saarstahl. Usinor-Sacilor, a company owned by the Government of France, expressed interest in Saarstahl. In 1989, the GOS and Usinor-Sacilor reached an agreement in which: (1) the two steel companies in Saarland, Saarstahl Volingen Gmbh. (Saarstahl) and Dillinger Hüttenwerke (Dillinger) would merge to form DHS Dillinger Hütte Saarstahl AG (DHS); (2) Usinor-Sacilor would buy the newly created DHS; and (3) in return for Usinor-Sacilor's purchase of DHS, the GOS and the Government of Germany (GOG) would forgive Saarstahl's debt obligations, also known as Rückzahlungsverpflichtungen (RZVs), to the regional and federal governments and release the company from any obligation to repay Saarstahl's guaranteed loans. The last step of the change in ownership took place in 1989 with the transfer of the long products business from DHS to a newly-formed company, Saarstahl AG.

In the investigation of this case, the Department found that the cancellation of Saarstahl's debts constituted countervailable subsidies. *See Final Affirmative Countervailing Duty Determination: Certain Hot Rolled Lead and Bismuth Carbon Steel Products from Germany,* 58 FR 6233, 6233 (January 27, 1993) (*Lead and Bismuth*). Further, the Department determined that the change in ownership transaction did not alter the effect of these previously bestowed subsidies. In the 1993 certain steel products investigations, the Department modified its position in *Lead and Bismuth* concerning changes in ownership. Specifically, the Department stated that it could no longer be assumed that the entire amount of subsidies passes through to the new owners after a change in ownership. Rather, when a company is sold, even partially, a portion of the sales price represents repayment of prior subsidies. *See GIA,* 58 FR at 37263. As a result of this change, the Department, pursuant to the *Remand Determination: Certain Hot Rolled Lead and Bismuth Carbon Steel Products from Germany,* (October 12, 1993), altered its original determination regarding the effects of privatization on subsidies previously received by Saarstahl so that it conformed with the methodology described in the *GIA.* This change in ownership methodology was upheld in *Saarstahl AG* v. *United States,* 78 F. 3d 1539 (Fed. Cir. 1996) and *British Steel plc* v. *Untied States,* 127 F.3d 1471 (Fed. Cir. 1997).

In the recent investigation of steel wire rod from Germany, we included in our change of ownership calculations the 1994 transaction under which Usinor-Sacilor, via DHS, spun-off 100 percent of Saarstahl AG to the GOS for DM 1. *See Final Affirmative Countervailing Duty Determination: Steel Wire Rod from Germany (German Wire Rod),* 62 FR 54990, (October 22, 1997) (*German Wire Rod*). Respondents have reported in this administrative review that, in 1997, the GOS transferred the majority of its shareholdings in Saarstahl to three parties: (1) Saarstahl Treuhand, (2) AG der Dillinger Huttenwerke (Dillinger), and (3) Kreditanstalt fur Wiederaufbau (Kreditanstalt). Prior to this transfer, the GOS held approximately 99.9 percent of Saarstahl's shares. After the share transfer, the GOS held approximately 32 percent of the company's shares. The remaining 68 percent was divided as follows: Saarstahl Treuhand—28.1 percent, Dillinger—19.9 percent, and Kreditanstalt—20 percent.

Regarding the 1997 privatization, petitioners argue in their March 11, 1999, submission that the new shareholders in Saarstahl should not be considered private entities. They argue that Saarstahl Treuhand is a trust that was set up and is controlled by the GOG because no private investor could be found for these shares. They argue that the GOS (through its ownership of Saarstahl) is an owner of the parent company of Dillinger and, therefore, Dillinger is government-controlled. They also argue that, because the Kreditanstalt is a development bank of the GOG, shares assigned to it represent no ultimate change in the ownership of Saarstahl. On this basis, petitioners argue that none of the three parties' purchase price can constitute repayment of Saarstahl's previously bestowed subsidies. In addition, petitioners argue that the Department should treat all of the purchase price as a grant to Saarstahl because none of the parties to the privatization made its purchase on terms consistent with those of a private investor.

In its March 22, 1999, submission, respondent rebuts petitioners' contention that the buyers of Saarstahl in 1997 were not private actors. Respondent argues that Saarstahl Treuhand is a private trust established under German law for the benefit of bankruptcy creditors and that it is not, in any way, controlled by the government. Regarding Dillinger, respondent states that approximately 5 percent is held by individual investors

and the remaining 95 percent is held by DHS. They then explain that the majority of DHS is owned by the private companies Usinor-Sacilor S.A. and ARBED S.A. Regarding Kreditanstalt, respondent argues that the administrative record of this proceeding clearly indicates that the development bank's decision to invest in Saarstahl was made on terms consistent with commercial considerations and, on this basis, its payment should be included as part of the purchase price. Thus, respondent argues that since all three parties made their decision to invest in Saarstahl independent of the GOG and the GOS, the Department should determine that 100 percent of the purchase price constitutes repayment of Saarstahl's previously bestowed subsidies.

In this administrative review, we are analyzing the privatization of Saarstahl in 1989, its subsequent spin-off in 1994, and the company's partial privatization in 1997. For purposes of this preliminary determination, we have applied the Department's change in ownership methodology for the 1989 privatization and the 1994 spin-off. However, we have not applied the change in ownership methodology for the 1997 reorganization. In light of petitioner's arguments that the new shareholders should not be considered private entities and that the purchase price constituted a countervailable grant, we are considering whether to treat contributions by the new shareholder as grants or as repayment of prior subsidies. We will gather further information regarding the 1997 change in ownership, and we will consider the comments submitted on the record by interested parties. We note that all information submitted on the record pertaining to this issue will be subject to verification and further analysis.

(II) Change in Ownership Calculation Methodology

Under the *Change in Ownership* methodology described in the GIA concerning the treatment of subsidies received prior to the sale of a company or the spinning-off of a productive unit, we estimate the portion of the purchase price attributable to prior subsidies. We compute this by first dividing the privatized company's subsidies by the company's net worth for each year during the period beginning with the earliest point at which nonrecurring subsidies would be attributable to the POR (in this case 1983) and ending one year prior to the change in ownership.

As in *German Wire Rod*, we have modified this methodology with respect to Saarstahl. *See* 62 FR 54991. Specifically, we calculated the ratios in question by including in the calculation the assistance that Saarstahl received prior to privatization in the year the assistance was received. We did so even though we do not consider this prior assistance, at the it was received, to be nonrecurring in nature, and, thus, allocable over time.

We then take the simple average of the ratios of subsidies to net worth. This simple average of the ratios serves as a reasonable surrogate for the portion subsidies constitute of the overall value of the company. Next, we multiply the average ratio by the purchase price to derive the portion of the purchase price attributable to repayment of prior subsidies. Finally, we reduce the benefit streams of the prior subsidies by the ratio of the repayment amount to the net present value of all remaining benefits at the time of privatization.

With respect to spin-offs, consistent with the Department's position regarding privatization, we analyze the spin-off of productive units to assess what portion of the sale price of the productive unit can be attributable to the repayment of prior subsidies. To perform this calculation, we first determine the amount of the seller's subsidies that the spun-off productive unit could potentially take with it. To calculate this amount, we divide the value of the assets of the spun-off unit by the value of the assets of the company selling the unit. We then apply this ratio to the net present value of the seller's remaining subsidies. We next estimate the portion of the purchase price going towards repayment of prior subsidies in accordance with the privatization methodology outlined above.

Analysis of Programs

I. Programs Conferring Subsidies

A. Government Forgiveness of Saarstahl Debt in 1989

During the period 1978 to 1989, Saarstahl and its predecessor companies received large amounts of assistance from the GOS and the GOG in the form of RZVs. Repayment of these RZVs became contingent upon Saarstahl returning to profitability and earning a profit above and beyond the losses accumulated after 1978.

In 1989, the GOS reached an agreement with Usinor-Sacilor to combine Saarstahl with Dillinger under a holding company, DHS. Pursuant to the combination agreement and as a condition for sale, in 1989 the GOG and GOS entered into a debt forgiveness contract (Entschuldungsvertrag, or EV) which effectively forgave all the outstanding repayment obligations owed by Saarstahl to the two Governments (*i.e.*, a total of DM 3.945 billion in debt was forgiven). The EV specified, however, that if Saarstahl went bankrupt, the GOG and GOS claims could be revived, but their claims would be subordinated to those of all other creditors.

After several years of unprofitable operation, Saarstahl filed for bankruptcy in 1993 under the German Bankruptcy Regulations (Konkursordnung). In 1994, the GOS bought Saarstahl back from Usinor-Sacilor for DM 1. At the time of its bankruptcy, Saarstahl's liabilities exceeded its assets by a factor of four, not including its liabilities to the GOG and GOS. Both Governments filed claims against the Saarstahl bankruptcy estate based on the RZV debt that was conditionally forgiven in 1989. These EV-related claims were rejected by the bankruptcy trustee as invalid in 1995 on the grounds that the degree of their subordination resulted in the fact that the GOG and GOS would never be repaid. The GOG and GOS chose not to appeal the rejection of their bankruptcy claims, on the grounds that the subordination of their claims made the likelihood of recovery very small, and not worth the high cost of litigating the matter.

In *Lead and Bismuth*, 58 FR at 6234, we found that Saarstahl's RZVs and similar related debt were forgiven by the 1989 EV, thus conferring a countervailable benefit on Saarstahl as of 1989. This was also the Department's finding in *Certain Steel* and *German Wire Rod*. No new information or evidence of changed circumstances was presented in this review to warrant any reconsideration of these findings.

To calculate the countervailable benefit in the POR, we used our standard declining balance grant methodology. We then divided the benefit attributable to the POR, adjusted to reflect the changes in ownership described above, by the total sales of Saarstahl during the same period. On this basis, we preliminarily determine the net subsidy for this program to be 11.61 percent *ad valorem* for Saarstahl.

B. *Debt Forgiveness by Private Banks in 1989*

Toward the end of 1985, the GOS presented a long-term restructuring plan for Saarstahl to Saarstahl's creditors and requested that they forgive loans in the amount of DM 350 million. In 1986, the private banks agreed to forgive DM 217.33 million of debt owed to them by Saarstahl (DM 216.82 of which was forgiven in 1989), if the GOG and GOS fulfilled certain prerequisites. Two of

the prerequisites were that the Governments forgive all debt owed to them by Saarstahl and that the GOS secure the future liquidity of Saarstahl. In 1986, the GOS agreed to forgive all debts owed to it by Saarstahl and to secure the liquidity of Saarstahl as it had in the past.

In the investigation of this case, we determined that the 1989 forgiveness of principal by private banks in the amount of DM 216.82 constituted a countervailable subsidy. *See Lead and Bismuth,* 58 FR 6233–34; *See also, German Wire Rod,* 62 FR at 54991. No new information or evidence of changed circumstances was presented in this review to warrant any reconsideration of that finding.

To calculate the countervailable subsidy, we followed the methodology described in the ''Government Forgiveness of Saarstahl's Debt in 1989'' section of the notice, above. We then divided the benefit attributable to the POR, adjusted to reflect the changes in ownership described above, by the total sales of Saarstahl during the same period. On this basis, we preliminarily determine the net subsidy for this program to be 0.64 percent *ad valorem* for Saarstahl.

C. *Worker Assistance Program (ECSC Redeployment Aid Under Article 56(2)(b)*

Under Article 56(2)(b) of the European Coal and Steel Community (ECSC) Treaty, persons employed in the iron, steel, and coal industries who lose their jobs may receive assistance for social adjustment. This assistance is provided to workers affected by restructuring measures, particularly workers withdrawing from the labor market into early retirement and workers forced into unemployment. The ECSC disburses assistance under this program on the condition that the affected country makes an equivalent contribution. During the POR, payments were made to Saarstahl, on behalf of its workers, under Article 56(2)(b).

In *Lead and Bismuth,* 58 FR at 6235, the Department determined that the portion of ECSC payments (*i.e.* 50 percent) made under this program during the POI, 1991, was not countervailable because the funds for this program came from the ECSC's operational budget, which is funded by levies on the companies. In *Lead and Bismuth,* the Department also previously found that the portion funded by the GOG was countervailable to the extent that the GOG's payments relieved Saarstahl of an obligation to its laid-off workers that the company would otherwise have incurred. *See Lead and Bismuth,* 58 FR at 6235.

In *German Wire Rod,* the Department determined this program to be countervailable but distinguished between GOG worker assistance payments relating to the social plan established in conjunction with Saarstahl's bankruptcy in 1993, and GOG worker assistance payments made pursuant to the company's pre-bankruptcy social plans. *See* 62 FR at 54993. In that investigation, the Department reasoned that Saarstahl's bankruptcy social plan provides the maximum allowable benefits to workers under German bankruptcy law and that, therefore, the knowledge of ECSC 56(2)(b) benefits did not affect the company's social plan obligations. Thus, the Department determined that GOG payments relating to Saarstahl's bankruptcy social plan are not countervailable. *Id.*

In this administrative review, we have followed the approach taken in *German Wire Rod* and, therefore, preliminarily determine that only the worker assistance payments received pursuant to Saarstahl's pre-bankruptcy social plans are countervailable. Because a company can expect to receive the benefits on an ongoing basis, we have limited our analysis to funds received during the POR, 1997. In situations where the company and its workers are aware at the time of their negotiations that the government will be making contributions to the workers' benefits, the Department's practice is to treat half of the amount paid by the government as benefitting the company. *See, GIA,* 58 FR at 37225. In the *GIA,* the Department stated that when the government's willingness to provide assistance is known at the time the contract is being negotiated, this assistance is likely to have an effect on the outcome of the negotiations. In these situations, the Department will assume that the differences between what the workers would have demanded and what the company would have preferred to have paid would have been split between the parties, with the result that one-half of the government payment goes to relieving the company of an obligation that would otherwise exist. *See, GIA,* 58 FR at 37256. This methodology was upheld in *LTV Steel Co.* v. *United States,* 985 F. Supp. 95, 116 (CIT 1997).

Consistent with Department's practice described above, the benefit to Saarstahl is one-half the amount paid to the workers by the GOG under the pre-bankruptcy social plan. To calculate the benefit under this program, we divided this amount by Saarstahl's total sales during the POR. On this basis, we preliminarily determine the net subsidy to Saarstahl under this program to be 0.06 percent *ad valorem*.

II. Program Preliminarily Determined to be Not Countervailable

A. *ECSC Research and Development Assistance Under Article 55*

Under Article 55 of the ECSC Treaty, assistance is available to promote technical and economic research relating to the production and increased use of coal and steel, and to occupational safety in the coal and steel industries. Since the end of 1986, this program has been funded solely through levies on steel producing companies.

During the POR, Saarstahl received research and development assistance related to calcium treated and aluminum deoxidized steels with high sulfur content under the ECSC Article 55 program.

In *Final Affirmative Countervailing Duty Determination: Certain Steel Products from Belgium,* 58 FR 37273, 37285, (July 9, 1993), the Department found this program to be not countervailable because funding under this program was provided by levies on participating steel companies and because the program stipulates that the results of research conducted under Article 55 must be made publicly available.

No new information or evidence of changed circumstances has been submitted in this proceeding to warrant reconsideration of this determination. Therefore, for purposes of this preliminary determination, we find this program not countervailable.

III. Other Program Examined

BRITE/EuRAM Research and Development Project (BRITE/EuRAM Project)

Under the BRITE/EuRAM Project, participants receive research and development assistance in the form of grants from the European Community (EC). In order to receive the assistance, participants must make a formal proposal to the EC for the funding of a specific research and development project. Applicants whose proposals have been accepted then enter into a contract with the EC in which such items as the scope of the project, project goals, applicant reporting requirements and EC payments are established.

During the POR, Saarstahl received grants from the EC under the BRITE/EuRAM Project for the development of a project entitled, ''World Class Performance for Wire Drawing through Improved Quality of the Manufacturing Process (WIREMAN).'' According to the

EC and Saarstahl, the objective of the WIREMAN project was to minimize waste and resource usage in the drawing process with the main focus of the project on the processing of steelcord for use in the manufacture of tires.

Because the research and development assistance related to this program is tied to merchandise other than subject merchandise, we preliminarily determine that this assistance did not benefit Saarstahl's production of subject merchandise during the POR. (For further discussion, *see* the Memorandum to the File, ''BRITE/EuRAM Project,'' dated March 31, 1999, on file in the Central Records Unit (CRU)). We note that we intend to verify the EC's and Saarstahl's statements as they relate to the tying of benefits under this program to merchandise other than subject merchandise.

IV. Programs About Which More Information Is Needed

Subsidies Leading Up to the 1997 Reorganization

In this administrative review, petitioners argue that information contained in Saarstahl's financial statements indicates that Saarstahl claimed large write-offs of loans and other liabilities both in 1996 and in 1997. They argue that the Department should analyze these write-offs within an overall context of Saarstahl's operation as a government-owned but bankrupt company and its reorganization out of bankruptcy in 1997.

In its original July 20, 1998, questionnaire response, Saarstahl explained that it was unable to submit the 1997 financial data requested by the Department because it had not yet completed its financial statements for 1997. Saarstahl submitted its financial statements for 1997 on the record on January 15, 1999. In a submission dated February 9, 1999, petitioners raised the issue of potentially large amounts of debt forgiveness and grants leading up to the 1997 reorganization. On February 26, 1999, Saarstahl submitted a questionnaire response containing further information regarding its large amounts of extraordinary income and writeoffs. On March 11, 1999, upon reviewing this new information, petitioners suggested that the Department should consider whether, as in the years leading up to the 1989 reorganization, massive debt forgiveness and additional government contributions allowed Saarstahl to remain an ongoing concern and emerge from its bankruptcy. Additionally, petitioners suggest that Saarstahl may have been forgiven value-added taxes that it owed. Saarstahl addressed petitioners claims in a submission dated March 22, 1999. In general, Saarstahl argues that its bankruptcy proceeding was handled in full accordance with German law and that the forgiveness of debts as a result of bankruptcy is not countervailable, in accordance with the Department's practice.

The issues raised by petitioners regarding Saarstahl's operation as a government-owned bankrupt company and the nature of its extraordinary income and write-offs leading up to its reorganization in 1997 merit further examination in this administrative review. Due to the delayed submission of Saarstahl's financial data for 1997, these issues were raised with very little time for the Department to collect all of the information needed to examine them fully. While the Department preliminarily concludes that the information on the record is insufficient to demonstrate the existence of a countervailable program, the Department will consider the issues further and gather additional information, which will be subject to verification. Among other things, we will examine: (1) the terms of Saarstahl's bankruptcy, (2) its operation as a going concern during bankruptcy, (3) the relationship between Saarstahl and its creditors, (4) the nature of its liabilities, (5) the terms of the 1997 reorganization, (6) the establishment of the purchase price, (7) the nature of Saarstahl debt writeoffs, and (8) the relationship between the new shareholders and the governments of Saarstahl and Germany. We will consider whether Saarstahl's writeoffs of liabilities leading up to the 1997 reorganization constitute countervailable subsidies, whether it received countervailable subsidies in the form of tax forgiveness, and whether the sale of Saarstahl provided the company with countervailable grants. After we collect additional information and conduct verification, we will prepare an analysis memorandum addressing all of the pertinent issues surrounding Saarstahl's reorganization in 1997. Prior to issuing our final determination, we intend to provide all parties the opportunity to comment on our analysis.

Verification

As provided in section 782(i) of the Act, we intend to verify the information submitted by the Governments of Germany and Saarland and Saarstahl. In addition, we will schedule our verification so that all parties to the proceeding will have ample time to comment on our findings prior to the publication of our final results of this administrative review.

Preliminary Results of Review

In accordance with 19 CFR 355.221(b)(4)(i), we have calculated an individual subsidy rate for Saarstahl, the producer/exporter subject to this administrative review. For the period January 1, 1997 through December 31, 1997, we preliminarily determine the net subsidy for Saarstahl to be 12.31 percent *ad valorem*. If the final results of this review remain the same as these preliminary results, the Department intends to instruct the U.S. Customs Service to assess countervailing duties for Saarstahl at 12.31 percent *ad valorem*. The Department also intends to instruct the U.S. Customs Service (Customs) to collect a cash deposit of 12.31 percent of the f.o.b. invoice price on all shipments of the subject merchandise from Saarstahl, entered, or withdrawn from warehouse, for consumption on or after the date of publication of the final results of this review.

Because the URAA replaced the general rule in favor of a country-wide rate with a general rule in favor of individual rates for investigated and reviewed companies, the procedures for establishing countervailing duty rates, including those for non-reviewed companies, are now essentially the same as those in antidumping cases, except as provided for in section 777A(e)(2)(B) of the Act. The requested review will normally cover only those companies specifically named. *See* 19 CFR 355.22(b). Pursuant to 19 CFR 355.22(c), for all companies for which a review was not requested, duties must be assessed at the cash deposit rate, and cash deposits must continue to be collected, at the rate previously ordered. As such, the countervailing duty cash deposit rate applicable to a company can no longer change, except pursuant to a request for a review of that company. *See Federal-Mogul Corporation and The Torrington Company* v. *United States*, 822 F. Supp. 782 (CIT 1993) and *Floral Trade Council* v. *United States*, 822 F. Supp. 766 (CIT 1993) (interpreting 19 CFR 353.22(e), the antidumping regulation on automatic assessment, which is identical to 19 CFR 355.22(g)). Therefore, the cash deposit rates for all companies except those covered by this review will be unchanged by the results of this review.

We will instruct Customs to continue to collect cash deposits for non-reviewed companies at the most recent

company-specific or country-wide rate applicable to the company. Accordingly, the cash deposit rates that will be applied to non-reviewed companies covered by this order are those established in the most recently completed administrative proceeding conducted under the URAA. If such a review has not been conducted, the rate established in the most recently completed administrative proceeding pursuant to the statutory provisions that were in effect prior to the URAA amendments is applicable. *See Lead Bar.* These rates shall apply to all non-reviewed companies until a review of a company assigned these rates is requested. In addition, for the period January 1, 1997 through December 31, 1997, the assessment rates applicable to all non-reviewed companies covered by this order are the cash deposit rates in effect at the time of entry.

Public Comment

Pursuant to 19 CFR 351.224(b), the Department will disclose to parties to the proceeding any calculations performed in connection with these preliminary results within five days after the date of publication of this notice. Pursuant to 19 CFR 351.309, interested parties may submit written comments in response to these preliminary results. Case briefs must be submitted within 30 days after the date of publication of this notice, and rebuttal briefs, limited to arguments raised in case briefs, must be submitted no later than five days after the time limit for filing case briefs. Parties who submit argument in this proceeding are requested to submit with the argument: (1) A statement of the issue, and (2) a brief summary of the argument. Case and rebuttal briefs must be served on interested parties in accordance with 19 CFR 351.303(f). Also, pursuant to 19 CFR 351.310, within 30 days of the date of publication of this notice, interested parties may request a public hearing on arguments to be raised in the case and rebuttal briefs. Unless the Secretary specifies otherwise, the hearing, if requested, will be held two days after the date for submission of rebuttal briefs, that is, thirty-seven days after the date of publication of these preliminary results.

The Department will publish the final results of this administrative review, including the results of its analysis of issues raised in any case or rebuttal brief or at a hearing.

This administrative review is issued and published in accordance with sections 751(a)(1) and 777(i)(1) of the Act (19 U.S.C. 1675(a)(1) and 19 U.S.C. 1677f(i)(1)).

Dated: March 31, 1999.

Robert S. LaRussa,

Assistant Secretary for Import Administration.

[FR Doc. 99–8621 Filed 4–6–99; 8:45 am]

BILLING CODE 3510–DS–P

DEPARTMENT OF COMMERCE

International Trade Administration

[C–412–811]

Certain Hot-Rolled Lead and Bismuth Carbon Steel Products from the United Kingdom; Preliminary Results of Countervailing Duty Administrative Review

AGENCY: Import Administration, International Trade Administration, Department of Commerce.

ACTION: Notice of Preliminary Results of Countervailing Duty Administrative Review.

SUMMARY: The Department of Commerce (''the Department'') is conducting an administrative review of the countervailing duty order on certain hot-rolled lead and bismuth carbon steel products (''lead bar'') from the United Kingdom for the period January 1, 1997 through December 31, 1997. For information on the net subsidy for each reviewed company, as well as for all non-reviewed companies, please see the *Preliminary Results of Review* section of this notice. If the final results remain the same as these preliminary results of administrative review, we will instruct the U.S. Customs Service to assess countervailing duties as detailed in the *Preliminary Results of Review* section of this notice. Interested parties are invited to comment on these preliminary results. (*See Public Comment* section of this notice.)

EFFECTIVE DATE: April 7, 1999.

FOR FURTHER INFORMATION CONTACT: Gayle Longest or Christopher Cassel, Group II, Office CVD/AD Enforcement VI, Import Administration, International Trade Administration, U.S. Department of Commerce, 14th Street and Constitution Avenue, N.W., Washington, D.C. 20230; telephone: (202) 482–2786.

SUPPLEMENTARY INFORMATION:

Background

On March 22, 1993, the Department published in the **Federal Register** (58 FR 15327) the countervailing duty order on certain hot-rolled lead and bismuth carbon steel products from the United Kingdom. On March 11, 1998, the Department published a notice of ''Opportunity to Request Administrative Review'' (63 FR 11868) of this countervailing duty order. We received a timely request for review, and we initiated the review, covering the period January 1, 1997 through December 31, 1997, on April 24, 1998, (63 FR 20378).

In accordance with 19 CFR 351.213(b) this review covers only those producers or exporters of the subject merchandise for which a review was specifically requested. Accordingly, this review covers British Steel plc./British Steel Engineering Steels Ltd. (formerly United Engineering Steels Limited). This review also covers nine programs.

On December 7, 1998, we extended the period for completion of the preliminary results pursuant to section 751(a)(3) of the Tariff Act of 1930, as amended. *See Certain Hot-Rolled Lead and Bismuth Carbon Steel Products From the United Kingdom: Postponement of Preliminary Results of Countervailing Duty Administrative Review* (63 FR 67459). The deadline for the final results of this review is no later than 120 days from the date on which these preliminary results are published in the **Federal Register**.

Applicable Statute

Unless otherwise indicated, all citations to the statute are references to the provisions of the Tariff Act of 1930, as amended by the Uruguay Round Agreements Act (''URAA'') effective January 1, 1995 (''the Act''). The Department is conducting this administrative review in accordance with section 751(a) of the Act. All citations to the Department's regulations reference 19 C.F.R. Part 351, (1998) unless otherwise indicated.

Scope of the Review

Imports covered by this review are hot-rolled bars and rods of non-alloy or other alloy steel, whether or not descaled, containing by weight 0.03 percent or more of lead or 0.05 percent or more of bismuth, in coils or cut lengths, and in numerous shapes and sizes. Excluded from the scope of this review are other alloy steels (as defined by the *Harmonized Tariff Schedule of the United States* (HTSUS) Chapter 72, note 1 (f)), except steels classified as other alloy steels by reason of containing by weight 0.4 percent or more of lead or 0.1 percent or more of bismuth, tellarium, or selenium. Also excluded are semi-finished steels and flat-rolled products. Most of the products covered in this review are provided for under subheadings 7213.20.00.00 and 7214.30.00.00 of the HTSUS. Small quantities of these products may also enter the United

States under the following HTSUS subheadings: 7213.31.30.00, 60.00; 7213.39.00.30, 00.60, 00.90; 7213.91.30.00, 45.00,60.00; 7213.99.00; 7214.40.00.10, 00.30, 00.50; 7214.50.00.10, 00.30, 00.50; 7214.60.00.10, 00.30, 00.50; 7214.91.00; 7214.99.00 and 7228.30.80.00, 80.50. The HTSUS subheadings are provided for convenience and for Customs purposes. The written description of the scope of this proceeding is dispositive.

Duty Absorption

On April 8, 1998, the Department received a request from petitioners to conduct a duty absorption review to determine whether British Steel Engineering Steels Ltd. absorbed countervailing duties. The Department considered petitioners request and determined that it is not appropriate to conduct a duty absorption inquiry in this countervailing duty review because the rationale for conducting duty absorption inquiries in antidumping duty proceedings are not relevant in countervailing duty cases. For further discussion, see Memorandum to Robert S. LaRussa from Holly Kuga, dated March 18, 1999, a public document on file in the Central Records Unit, Room B–099 of the Main Commerce Building.

Subsidies Value Information

Change in Ownership

(I) Background

On March 21, 1995, British Steel plc (''BS plc'') acquired all of Guest, Keen & Nettlefolds' (GKN) shares in United Engineering Steels (''UES''), the company which produced and exported the subject merchandise to the United States during the original investigation. Thus, UES became a wholly-owned subsidiary of BS plc and was renamed British Steel Engineering Steels (''BSES'').

Prior to this change in ownership, UES was a joint venture company formed in 1986 by British Steel Corporation (''BSC''), a government-owned company, and GKN. In return for shares in UES, BSC contributed a major portion of its Special Steels Business, the productive unit which produced the subject merchandise. GKN contributed its Brymbo Steel Works and its forging business to the joint venture. BSC was privatized in 1988 and now bears the name BS plc.

In the investigation of this case, the Department found that BSC had received a number of nonrecurring subsidies prior to the 1986 transfer of its Special Steels Business to UES. *See Final Affirmative Countervailing Duty Determination: Certain Hot-Rolled Lead and Bismuth Carbon Steel Products From the United Kingdom*, 58 FR 6237, 6243 (January 27, 1993) (*Lead Bar*). Further, the Department determined that the sale to UES did not alter these previously bestowed subsidies, and thus the portion of BSC's pre-1986 subsidies attributable to its Special Steels Business transferred to UES. *Lead Bar*, 58 FR at 6240.

In the 1993 certain steel products investigations, the Department modified the allocation methodology developed for *Lead Bar*. Specifically, the Department stated that it would no longer assume that all subsidies allocated to a productive unit follow it when it is sold. Rather, when a productive unit is spun-off or acquired, a portion of the sales price of the productive unit represents the reallocation of prior subsidies. *See* the General Issues Appendix (*GIA*), appended to the *Final Countervailing Duty Determination; Certain Steel Products From Austria*, 58 FR 37217, 37269 (July 9, 1993) (*Certain Steel*). In a subsequent Remand Determination, the Department aligned *Lead Bar* with the methodology set forth in the ''Privatization'' and ''Restructuring'' sections of the *GIA*. *Certain Hot-Rolled Lead and Bismuth Carbon Steel Products from the United Kingdom: Remand Determination* (October 12, 1993) (*Remand*).

On March 21, 1995, BS plc acquired 100 percent of UES. In determining how this change in ownership affects our attribution of subsidies to the subject merchandise, we relied on section 771(5)(F) of the Act, which states that a change in ownership does not require a determination that past subsidies received by an enterprise are no longer countervailable, even if the transaction is accomplished at arm's length. The Statement of Administrative Action, H.R. Doc. No. 316, Vol. 1, 103d Cong., 2d Sess. (1994) (SAA), explains that the aim of this provision is to prevent the extreme interpretation that the arm's length sale of a firm automatically, and in all cases, extinguishes any prior subsidies conferred. While the SAA indicates that the Department retains the discretion to determine whether and to what extent a change in ownership eliminates past subsidies, it also indicates that this discretion must be exercised carefully by considering the facts of each case. SAA at 928.

In accordance with the Act and the SAA, we examined the facts of BS plc's acquisition of GKN's 50 percent ownership stake in UES, and we determined that the change in ownership does not render previously bestowed subsidies attributable to UES no longer countervailable. However, we also determined that a portion of the purchase price paid for UES is attributable to its prior subsidies. Therefore, we reduced the amount of the subsidies that ''traveled'' with UES to BS plc, taking into account the allocation of subsidies to GKN, the former joint-owner of UES. *See Certain Hot-Rolled Lead and Bismuth Carbon Steel Products From the United Kingdom; Final Results of Countervailing Duty Administrative Review*, 62 FR 53306 (October 14, 1997) (*Lead Bar 95 Final Results*) and *Certain Hot-Rolled Lead and Bismuth Carbon Steel Products From the United Kingdom; Preliminary Results of Countervailing Duty Administrative Review*, 62 FR 16555 (April 7, 1997) (*Lead Bar 95 Preliminary Results*). To calculate the amount of UES's subsidies that passed through to BS plc as a result of the acquisition, we applied the methodology described in the ''Restructuring'' section of the *GIA*. *See GIA*, 58 FR at 37268–37269. This determination is in accordance with our changes in ownership finding in *Final Affirmative Countervailing Duty Determination; Pasta From Italy*, 61 FR 30288, 30289–30290 (June 14, 1996), and our finding in the 1994 administrative review of this case, in which we determined that ''[t]he URAA is not inconsistent with and does not overturn the Department's *General Issues Appendix* methodology or its findings in the *Lead Bar Remand Determination.*'' *Certain Hot-Rolled Lead and Bismuth Carbon Steel Products From the United Kingdom; Final Results of Countervailing Duty Administrative Review*, 61 FR 58377, 58379 (November 14, 1996).

With the acquisition of UES, we also determined that BS plc's remaining subsidies are attributable to the subject merchandise, now produced by BS plc's wholly-owned subsidiary, BSES. Where the Department finds that a company has received untied countervailable subsidies, to determine the countervailing duty rate, the Department attributes those subsidies to that company's total sales of domestically produced merchandise, including the sales of 100-percent-owned domestic subsidiaries. If the subject merchandise is produced by a subsidiary company, and the only subsidies in question are the untied subsidies received by the parent company, the countervailing duty rate calculation for the subject merchandise is the same as described above. Similarly, if such a company purchases another company, as was the case with

BS plc's purchase of UES, then the current benefit from the parent company's allocable untied subsidies is attributed to total sales, including the sales of the newly acquired company. *See, e.g., GIA*, 58 FR at 3762 (''the Department often treats the parent entity and its subsidiaries as one when determining who ultimately benefits from a subsidy''). Accordingly, in the *Lead Bar 95 Final Results*, we determined that it is appropriate to collapse BSES with BS plc for purposes of calculating the countervailing duty for the subject merchandise. BSES, as a wholly-owned subsidiary of BS plc, continues to benefit from the remaining benefit stream of BS plc's untied subsidies.

In collapsing UES with BS plc, we also determined that UES's untied subsidies ''rejoined'' BS plc's pool of subsidies with the company's 1995 acquisition. All of these subsidies were untied subsidies originally bestowed upon BSC (BS plc). After the formation of UES in 1986, the subsidies that ''traveled'' with the Special Steels Business were also untied, and were found to benefit UES as a whole. *See Lead Bar 95 Final Results; Lead Bar 95 Preliminary Results.*

(II) *Calculation of Benefit*

To calculate the countervailing duty rate for the subject merchandise in 1997, we first determined BS plc's benefits in 1997, taking into account all spin-offs of productive units (including the Special Steel Business) and BSC's full privatization in 1988. *See Final Affirmative Countervailing Duty Determination; Certain Steel Products from the United Kingdom*, 58 FR 37393 (July 9, 1993) (*UK Certain Steel*). We then calculated the amount of UES's subsidies that ''rejoined'' BS plc after the 1995 acquisition, taking into account the reallocation of subsidies to GKN. *See Lead Bar 95 Final Results; Lead Bar 95 Preliminary Results.* As indicated above, in determining both these amounts, we followed the methodology outlined in the *GIA*. After adding BS plc's and UES's benefits for each program, we then divided that amount by BS plc's total sales of merchandise produced in the United Kingdom in 1997.

Allocation Methodology

In *British Steel plc* v. *United States*, 879 F. Supp. 1254 (CIT 1995) (*British Steel*), the U.S. Court of International Trade (''the Court'') ruled against the allocation period methodology for non-recurring subsidies that the Department has employed for the past decade, a methodology that was articulated in the *General Issues Appendix* (58 FR 37226). In accordance with the Court's decision on remand, the Department determined that the most reasonable method of deriving the allocation period for nonrecurring subsidies is a company-specific average useful life (AUL) of non-renewable physical assets. For British Steel, we determined this allocation period to be 18 years. This remand determination was affirmed by the Court on June 4, 1996. *British Steel*, 929 F.Supp 426, 439 (CIT 1996).

The Department's acquiescence to the CIT's decision in the *Certain Steel* cases resulted in different allocation periods between the *UK Certain Steel* and *Lead Bar* proceedings (18 years vs. 15 years). Different allocation periods for the same subsidies in two proceedings involving the same company generate significant inconsistencies. Moreover, UES became a wholly-owned subsidiary of BS plc in 1995. In the 1995 review of *Lead Bar*, in order to maintain a consistent allocation period across the *UK Certain Steel* and *Lead Bar* proceedings, as well as in the different segments of Lead Bar, we altered the allocation methodology previously used to determine the allocation period for non-recurring subsidies previously bestowed on BSC and attributed to UES. In the 1995 review, we applied the company-specific 18-year allocation period to all non-recurring subsidies. *See Lead Bar 95 Final Results.* Based on our decision in the 1995 administrative review of this order, we preliminarily determine that it is appropriate in this review to continue to allocate all of BSC's non-recurring subsidies over BS plc's company-specific average useful life of renewable physical assets (*i.e.*, 18 years).

Analysis of Programs

I. Programs Conferring Subsidies

A. Equity Infusions

In each year from 1978/79 through 1985/86, BSC/BS plc received equity capital from the Secretary of State for Trade and Industry pursuant to section 18(1) of the Iron and Steel Acts 1975, 1981, and 1982. According to section 18(1), the Secretary of State for the Department of Trade and Industry may ''pay to the Corporation (BSC) such funds as he sees fit.'' The Government of the United Kingdom's equity investments in BSC/BS plc were made pursuant to an agreed external financing limit which was based upon medium-term financial projections. BSC's performance was monitored by the Government of the United Kingdom on an ongoing basis and requests for capital were examined on a case-by-case basis. The UK government did not receive any additional ownership, such as stock or additional rights, in return for the capital provided to BSC/BS plc under section 18(1) since it already owned 100 percent of the company.

In *Lead Bar* (58 FR at 6241), the Department found BSC/BS plc to be unequityworthy from 78/79 through 1985/86, and thus determined that the Government of the United Kingdom's equity infusions were inconsistent with commercial considerations. Although, prior to the formation of UES, BSC's section 18(1) equity capital was written off in two stages (£3,000 million in 1981 and £1,000 million in 1982) as part of a capital reconstruction of BSC, the Department determined that BSC/BS plc benefitted from these equity infusions, notwithstanding the subsequent write-off of equity capital. Therefore, the Department countervailed the equity investments as grants given in the years the equity capital was received. No new information or evidence of changed circumstances was presented in this review to warrant a reconsideration of that finding.

Because the Department determined in *Lead Bar* that the infusions are non-recurring, we have allocated the benefits over BS plc's company-specific average useful life of renewable physical assets (18 years).

Although uncreditworthiness was not specifically alleged or investigated during the investigation on lead bar, in *UK Certain Steel* the Department found that BSC/BS plc was uncreditworthy from 1977/78 through 1985/86. 58 FR at 37395. No new information or evidence of changed circumstances was presented in this review to warrant a reconsideration of that finding. Therefore, we have used a discount rate which includes a risk premium to calculate the benefit from the grants. *See, e.g., Final Affirmative Countervailing Duty Determinations: Certain Steel Products From Mexico*, 58 FR 37352, 37354 (July 9, 1993) (Mexican Steel).

To calculate the benefit to the subject merchandise from this program, we first summed the benefit to BS plc from all infusions allocated to 1997. Then, we determined the portion of that benefit still remaining with BS plc after accounting for privatization and spin-offs. To that we added the portion of UES's subsidies under this program that ''rejoined'' BS plc with the acquisition. *See* the ''Change in Ownership'' section of the notice. We then divided the result by BS plc's total sales of merchandise produced in the United Kingdom in 1997. On this basis, we preliminarily determine the net subsidy for this

program to be 4.07 percent *ad valorem* in 1997.

B. Regional Development Grant Program

Regional development grants were paid to BSC/BS plc under the Industry Act of 1972 and the Industrial Development Act of 1982. In order to qualify for assistance under these two Acts, an applicant had to be engaged in manufacturing and located in an assisted area. Assisted areas are older, industrial regions identified as having deep-seated, long-term problems such as high levels of unemployment, migration, slow economic growth, derelict land, and obsolete factory buildings. Regional development grants were given for the purchase of specific assets. According to the Government of the United Kingdom, the program involved one-time grants, sometimes disbursed over several years.

BSC/BS plc received regional development grants during the period between fiscal years 1978/79 and 1985/86. The Department found this program countervailable in *Lead Bar* (58 FR at 6242), because it is limited to specific regions. No new information or evidence of changed circumstances was presented in this review to warrant a reconsideration of that finding.

In *Lead Bar,* we determined that, because each grant required a separate application, these grants are non-recurring. Accordingly, we have calculated the benefits from this program by allocating the benefits over BS plc's company-specific average useful life of renewable physical assets (18 years). Since BSC/BS plc was uncreditworthy from 1978/79 through 1985/86 (as discussed under the ''Equity Infusions'' section, above), we have used a discount rate which includes a risk premium (*see Mexican Steel,* 58 FR at 37354) to calculate the benefits from these grants.

To calculate the benefit from this program, we followed the methodology described above in the section on ''Equity Infusions''. On this basis, we preliminarily determine the net subsidy for this program to be 0.14 percent *ad valorem* in 1997.

C. National Loan Funds Loan Cancellation

In conjunction with the 1981/1982 capital reconstruction of BSC, section 3(1) of the Iron and Steel Act of 1981 extinguished certain National Loans Fund (''NLF'') loans, as well as the interest accrued thereon, at the end of BSC's 1980/81 fiscal year. Because this loan cancellation was provided specifically to BSC, the Department determined in *Lead Bar* (58 FR at 6242) that it provided a countervailable benefit. No new information or evidence of changed circumstances was presented in this review to warrant a reconsideration of that finding.

We calculated the benefit for this review using our standard methodology for non-recurring grants. We allocated the benefits from this loan cancellation over BS plc's company-specific average useful life of renewable physical assets (18 years). Because BSC/BS plc was found to be uncreditworthy in 1981/82 (as discussed under ''Equity Infusions'' section, above), we have used a discount rate which includes a risk premium. *See Mexican Steel,* 58 FR at 37354.

To calculate the benefit from this program, we followed the methodology described above in the section on ''Equity Infusions''. On this basis, we preliminarily determine the net subsidy for this program to be 0.43 percent *ad valorem* in 1997.

II. Programs Preliminarily Determined To Be Not Used

We examined the following programs and preliminarily determine that the producers and/or exporters of the subject merchandise did not apply for or receive benefits under these programs during the period of review:

A. New Community Instrument Loans
B. NLF Loans.
C. Regional Selective Loans.
D. ECSC Article 56(b)(2) Redeployment Aid.
E. Inner Urban Areas Act of 1978.
F. LINK Initiative

III. Other Programs Examined

BRITE/EuRAM and Standards Measurement and Testing Program

BS plc received assistance under these two European Union programs to fund research and development. The European Union claimed that assistance provided under both of these programs is non-countervailable in accordance with Article 8.2(a) of the WTO Agreement on Subsidies and Countervailing Measures and section 771(5B)(B) of the Act (which provide that certain research and development subsidies are not countervailable). We preliminarily determine that it is not necessary to determine whether BRITE/EuRAM and the Standards Measurement and Testing Program qualify for non-countervailable treatment because combined, the assistance provided under both of these programs would result in a rate of less than 0.005 percent *ad valorem,* and thus would have no impact on the overall countervailing duty rate calculated for this POR. For this same reason we have not conducted a specificity analysis of these programs. *See, e.g., Final Affirmative Countervailing Duty Determination: Steel Wire Rod from Germany,* 62 FR 54990, 54995–54996 (October 22, 1997); *Certain Carbon Steel Products from Sweden; Final Results of Countervailing Duty Administrative Review,* 62 FR 16549, 16553 (April 7, 1997) and *Certain Carbon Steel Products from Sweden; Preliminary Results of Countervailing Duty Administrative Review,* 61 FR 64062, 64065 (December 3, 1996); *Final Negative Countervailing Duty Determination: Certain Laminated Hardwood Trailer Flooring (''LHF'') From Canada,* 62 FR 5201 (February 4, 1997); *Industrial Phosphoric Acid From Israel; Final Results of Countervailing Duty Administrative Review,* 61 FR 53351, 53352 (October 11, 1996) and *Industrial Phosphoric Acid From Israel; Preliminary Results of Countervailing Duty Administrative Review,* 61 FR 28845 (June 6, 1996).

Preliminary Results of Review

In accordance with 19 CFR 351.221(b)(4)(i), we have calculated an individual subsidy rate for each producer/exporter subject to this administrative review. As discussed in the ''Change in Ownership'' section of the notice, above, we are treating British Steel plc and British Steel Engineering Steels as one company for purposes of this proceeding. For the period January 1, 1997 through December 31, 1997, we preliminarily determine the net subsidy for British Steel plc/British Steel Engineering Steels (BS plc/BSES) to be 4.64 percent *ad valorem.* If the final results of this review remain the same as these preliminary results, the Department intends to instruct the U.S. Customs Service (''Customs'') to assess countervailing duties for BS plc/BSES at 4.64 percent *ad valorem.* The Department also intends to instruct the Customs to collect a cash deposit of estimated countervailing duties of 4.64 percent of the f.o.b. invoice price on all shipments of the subject merchandise from BS plc/BSES, entered, or withdrawn from warehouse, for consumption on or after the date of publication of the final results of this review.

Because the URAA replaced the general rule in favor of a country-wide rate with a general rule in favor of individual rates for investigated and reviewed companies, the procedures for establishing countervailing duty rates, including those for non-reviewed companies, are now essentially the same as those in antidumping cases, except as provided for in section 777A(e)(2)(B) of the Act. The requested review will

normally cover only those companies specifically named. *See* 19 CFR 351.213(b). Pursuant to 19 CFR 351.212(c), for all companies for which a review was *not* requested, duties must be assessed at the cash deposit rate, and cash deposits must continue to be collected, at the rate previously ordered. As such, the countervailing duty cash deposit rate applicable to a company can no longer change, except pursuant to a request for a review of that company. *See Federal-Mogul Corporation and The Torrington Company* v. *United States,* 822 F. Supp. 782 (CIT 1993) and *Floral Trade Council* v. *United States,* 822 F. Supp. 766 (CIT 1993) (interpreting 19 CFR 353.22(e), the antidumping regulation on automatic assessment, which is identical to 19 CFR 355.22(g)). Therefore, the cash deposit rates for all companies except those covered by this review will be unchanged by the results of this review.

We will instruct Customs to continue to collect cash deposits for non-reviewed companies at the most recent company-specific or country-wide rate applicable to the company. Accordingly, the cash deposit rates that will be applied to non-reviewed companies covered by this order are those established in the most recently completed administrative proceeding conducted under the URAA. If such a review has not been conducted, the rate established in the most recently completed administrative proceeding pursuant to the statutory provisions that were in effect prior to the URAA amendments is applicable. *See Certain Hot-Rolled Lead and Bismuth Carbon Steel Products from the United Kingdom; Final Results of Countervailing Duty Administrative Review,* 60 FR 54841 (October 26, 1995). These rates shall apply to all non-reviewed companies until a review of a company assigned these rates is requested. In addition, for the period January 1, 1997 through December 31, 1997, the assessment rates applicable to all non-reviewed companies covered by this order are the cash deposit rates in effect at the time of entry.

Public Comment

Pursuant to 19 CFR 351.224(b), the Department will disclose to parties to the proceeding any calculations performed in connection with these preliminary results within five days after the date of publication of this notice. Pursuant to 19 CFR 351.309, interested parties may submit written comments in response to these preliminary results. Case briefs must be submitted within 30 days after the date of publication of this notice, and rebuttal briefs, limited to arguments raised in case briefs, must be submitted no later than five days after the time limit for filing case briefs. Parties who submit argument in this proceeding are requested to submit with the argument: (1) a statement of the issue, and (2) a brief summary of the argument. Case and rebuttal briefs must be served on interested parties in accordance with 19 CFR 351.303(f). Also, pursuant to 19 CFR 351.310, within 30 days of the date of publication of this notice, interested parties may request a public hearing on arguments to be raised in the case and rebuttal briefs. Unless the Secretary specifies otherwise, the hearing, if requested, will be held two days after the date for submission of rebuttal briefs. The Department will publish the final results of this administrative review, including the results of its analysis of issues raised in any case or rebuttal brief or at a hearing.

This administrative review is issued and published in accordance with sections 751(a)(1) and 777(i)(1) of the Act (19 U.S.C. 1675(a)(1) and 19 U.S.C. 1677f(i)(1)).

Dated: March 31, 1999.

Robert S. LaRussa,

Assistant Secretary for Import Administration.

[FR Doc. 99–8626 Filed 4–6–99; 8:45 am]

BILLING CODE 3510–DS–P

DEPARTMENT OF COMMERCE

International Trade Administration

[C–489–502]

Certain Welded Carbon Steel Pipes and Tubes and Welded Carbon Steel Line Pipe from Turkey; Preliminary Results of Countervailing Duty Administrative Reviews

AGENCY: Import Administration, International Trade Administration, Department of Commerce.

ACTION: Notice of Preliminary Results of Countervailing Duty Administrative Reviews.

SUMMARY: The Department of Commerce (the Department) is conducting administrative reviews of the countervailing duty orders on certain welded carbon steel pipes and tubes and certain welded carbon steel line pipe from Turkey for the period January 1, 1997 through December 31, 1997. For information on the net subsidy for each reviewed company for each class or kind of merchandise, as well as for all non-reviewed companies, *see* the *Preliminary Results of Reviews* section of this notice. If the final results remain the same as these preliminary results of administrative reviews, we will instruct the U.S. Customs Service to assess countervailing duties as detailed in the *Preliminary Results of Reviews* section of this notice. Interested parties are invited to comment on these preliminary results. (*See Public Comment* section of this notice.)

EFFECTIVE DATE: April 7, 1999.

FOR FURTHER INFORMATION CONTACT: Stephanie Moore or Eric Greynolds, Group II, Office of CVD/AD Enforcement VI, Import Administration, International Trade Administration, U.S. Department of Commerce, 14th Street and Constitution Avenue, N.W., Washington, D.C. 20230; telephone: (202) 482–3692 or (202) 482–6071, respectively.

SUPPLEMENTARY INFORMATION:

Background

On March 7, 1986, the Department published in the **Federal Register** (51 FR 7984) the countervailing duty orders on certain welded carbon steel pipes and tubes (pipe and tube) and certain welded carbon steel line pipe (line pipe) from Turkey. On March 11, 1998, the Department published a notice of ''Opportunity to Request Administrative Review'' (63 FR 11868) of these countervailing duty orders. We received a timely request to conduct a review of pipe and tube from Yucel Boru ve Profil Endustrisi A.S., and its affiliated companies, Cayirova Boru Sanayi ve Ticaret A.S., and Yucelboru Ihracat Ithalat ve Pazarlama A.S. (Yucel Boru Group). We also received a timely request to conduct a review of line pipe from Mannesmann—Sumerbank Boru Endustrisi T.A.S. (Mannesmann). We initiated the reviews covering the period January 1, 1997 through December 31, 1997 on April 24, 1998 (62 FR 20378).

In accordance with 19 CFR 351.213(b), these reviews cover only those producers or exporters of the subject merchandise for which a review was specifically requested. Accordingly, the review on pipe and tube covers the Yucel Boru Group and the review on line pipe covers Mannesmann. These reviews also cover 21 programs.

On December 7, 1998, we extended the period for completion of the preliminary results pursuant to section 751(a)(3)(A) of the Tariff Act of 1930, as amended. *See Certain Welded Carbon Steel Pipes and Tubes and Welded Carbon Steel Line Pipe from Turkey: Extension of the Time Limit for Preliminary Results of Countervailing Duty Administrative Reviews* (63 FR 67460). The deadline for the final

results of this review is no later than 120 days from the date on which these preliminary results are published in the **Federal Register**.

Applicable Statute and Regulations

Unless otherwise indicated, all citations to the statute are references to the provisions of the Tariff Act of 1930, as amended by the Uruguay Round Agreements Act (URAA) effective January 1, 1995 (the Act). The Department is conducting this administrative review in accordance with section 751(a) of the Act. All citations to the Department's regulations reference 19 CFR Part 351 (1998), unless otherwise indicated.

Scope of Reviews

Imports covered by these reviews are shipments from Turkey of two classes or kinds of merchandise: (1) certain welded carbon steel pipe and tube, having an outside diameter of 0.375 inch or more, but not more than 16 inches, of any wall thickness. These products, commonly referred to in the industry as standard pipe and tube or structural tubing, are produced to various American Society for Testing and Materials (ASTM) specifications, most notably A–53, A–120, A–135, A–500, or A–501; and (2) certain welded carbon steel line pipe with an outside diameter of 0.375 inch or more, but not more than 16 inches, and with a wall thickness of not less than .065 inch. These products are produced to various American Petroleum Institute (API) specifications for line pipe, most notably API–L or API–LX. These products are classifiable under the Harmonized Tariff Schedule of the United States (HTSUS) as item numbers 7306.30.10 and 7306.30.50. The HTSUS item numbers are provided for convenience and Customs purposes. The written descriptions remain dispositive.

Calculation of Benefits

Foreign Exchange Difference (''Kur Farki'' Accounts)

(I) Background

In prior reviews, the respondent companies argued that, in order to correctly calculate the *ad valorem* subsidy rates, the Department should include foreign exchange gains and losses (kur farki) resulting from their foreign sales in the denominator because such exchange differences are actual sales revenue. In support, respondents cited the Turkish generally accepted accounting principles (Turkish GAAP) requirement to include foreign exchange differences in their gross sales in the income statement. Respondents also submitted a Government of the Republic of Turkey (GRT) Standard Accounting Plan, explaining that the Turkish GAAP indicates gross sales include commodities sold or services rendered as a result of a company's main operations, as well as exchange rate differences related to export sales within the relevant period. (See, GRT, June 22, 1998 questionnaire response, Exhibit 23). However, in past reviews, the Department determined that, although the foreign exchange differences were included in the companies' income statement as part of the total revenue figure for tax purposes, foreign exchange differences are not sales revenue. *See e.g., Certain Welded Carbon Steel Pipe and Tube and Welded Carbon Steel Line Pipe from Turkey; Preliminary Results and Partial Recission of Countervailing Duty Administrative Reviews*, 62 FR 64808 (December 9, 1997) (*1996 Preliminary Results*), and *Certain Welded Carbon Steel Pipe and Tube and Welded Carbon Steel Line Pipe from Turkey; Final Results and Partial Recission of Countervailing Duty Administrative Reviews*, 63 FR 18885, 18890 (April 16, 1998) (*1996 Final Results*). *See also Certain Welded Carbon Steel Pipes and Tubes and Welded Carbon Steel Line Pipe from Turkey; Preliminary Results of Countervailing Duty Administrative Reviews*, 62 FR 16782 (April 8, 1997) (*1995 Preliminary Results*), and *Certain Welded Carbon Steel Pipes and Tubes and Welded Carbon Steel Line Pipe from Turkey; Final Results of Countervailing Duty Administrative Reviews*, 62 FR 43984 (August 18, 1997) (*1995 Final Results*).

In reviewing U.S. and international accounting standards, we find that foreign exchange differences are not viewed as sales income generated by a company's main operations. Rather, foreign exchange differences are viewed as ''other income,'' which results from foreign exchange rate changes that take place between the date a company records a sale denominated in a foreign currency at the exchange rate in effect on that day, and the exchange rate in effect on the day that the company records receipt of payment that is denominated in that foreign currency. The Financial Accounting Standards (FAS) No. 52—Foreign Currency Transactions of the Financial Accounting Standards Board (FASB) indicates that a change in exchange rates between the functional currency (Turkish Lira) and the currency in which an export transaction is denominated (*e.g.*, U.S. dollars) increases or decreases the amount of functional currency expected upon settlement of the export transaction. That increase or decrease in expected functional currency is a foreign currency transaction gain or loss that is generally included in determining net income. (Items such as currency hedging, and transactions of a long-term investment nature are excluded in determining net operating income.) (*See FASB*, Volume I, June 1, 1997). Foreign exchange gains or losses are reported in the company's income statement as a non-operating item or ''other income,'' *i.e.*, income derived from other sources, such as a sale of a fixed asset, which, in turn, is reported in net income. *Wiley, Interpretation and Application of Generally Accepted Accounting Principles*, at 767 (1998); *see also International Accounting Standard Financial Reporting in Hyper-inflationary Economies* (IAS 5) (foreign exchange gains or losses should be included in net income, which encompasses ''other income''). Therefore, inclusion of foreign currency exchange gains and losses in gross sales is inconsistent with international accounting standards. *See also Price Waterhouse, Doing Business in Turkey*, Chapter 11 (1992, as amended July 31, 1995) (lack of clearly defined commercial accounting principles and the predominance of tax law mean that Turkish law should be treated with extreme caution, and international accounting standards are preferred). Additionally, we note that *World Accounting*, Matthew Bender, Volume 3, p. TRK–11 (1998) states that receivables denominated in foreign currency should be recorded at the original national currency value and should be valued again at the end of the accounting period using the exchange rate of that date established by the Ministry of Finance. The difference in national currency value should be recorded under foreign exchange gains and losses account. More importantly, foreign exchange gains and losses have to do with financing activities and not sales activities. Therefore, consistent with U.S. international and Turkish accounting standards, we continue to determine that kur farki amounts are foreign exchange differences and not sales revenue. However, we have preliminarily determined to index both the subsidy benefits (numerator) and sales revenue (denominator) to account for the impact of high inflation in Turkey (*see* below).

(II) Modification of the Calculation Methodology

In prior reviews, to determine the benefit for each program, we deducted the foreign exchange differences, which resulted from the changes in the U.S. dollar/Turkish lira exchange rates, from the sales figure. Normally, where a country is experiencing high rates of inflation, we may make adjustments when companies index for inflation. In this case, however, despite a persistently high rate of inflation in Turkey, Turkish companies do not index any of the figures (other than fixed assets) in their financial statements to account for inflation. In the past, we have not indexed the numerator and denominator.

Upon further review, the persistently high rate of inflation in Turkey leads us to conclude that we should index the benefit (numerator) in the month of receipt and index the monthly sales (denominator) for each program. During the period of review (POR), the inflation rate in Turkey was 81 percent, as published in the 1997 Quarterly Bulletin by the Central Bank of Turkey. Indexing the benefit and the sales figures will neutralize any potential distortion in our subsidy calculations caused by high inflation and the timing of the receipt of the subsidy. We indexed the sales values and the benefit using the Wholesale Price Index (WPI) for 1997, as reported by the Central Bank of Turkey.

Analysis of Programs

I. Programs Conferring Subsidies

A. Pre-Shipment Export Credit

The Export Credit Bank of Turkey provides short-term pre-shipment export loans to exporters through intermediary commercial banks. The program is designed to support export-related industries. Loans are made to exporters who commit to export within a specified period of time. Generally, loans are extended for 120 days for industrial goods and cover 50 to 75 percent of the FOB export value. These loans are denominated in Turkish Lira (TL) and repaid in TL. The interest rate charged on these pre-shipment loans is established by Turk Eximbank and is tied to the Central Bank's rediscount rate. In *1996 Preliminary and Final Results, 1995 Preliminary and Final Results,* and *Final Affirmative Countervailing Duty Determination: Certain Pasta from Turkey* 61 FR 30366 (June 14, 1996) (*Pasta*), the Department found this program countervailable because receipt of the loans is contingent upon export performance and the interest rate paid on these loans is less than the amount the recipient would pay on a comparable commercial loan.

In *1996 Final Results* and *1995 Final Results* reviews, we found these loans to be untied and available for exported merchandise because the exporter has to only show that an export has taken place and provide the foreign currency exchange receipts from the commercial bank to close out the loan with Turk Eximbank. Because the loans are not specifically tied to a particular destination at the time of approval, we determined that the pre-shipment loan program is an untied export loan program. *See 1996 Final Results* 63 FR at 18886 and *1995 Final Results,* 62 FR at 43986. In these reviews, no new information or evidence of changed circumstances has been submitted to warrant reconsideration of that finding.

Pursuant to section 771(5)(E)(ii) of the Act, a benefit shall be treated as conferred ''in the case of a loan, if there is a difference between the amount the recipient of the loan pays on the loan and the amount the recipient would pay on a comparable commercial loan that the recipient could actually obtain on the market.'' In this case, to calculate the rate the recipient would pay on a comparable commercial loan that could actually be obtained by it, *i.e.*, the benchmark interest rate, we are using company-specific interest rates on comparable commercial loans for all pre-shipment loans that were taken out by Mannesmann in both 1996 and 1997, and repaid in 1997. The rates on commercial loans, used as benchmarks, provided to Mannesmann include the customary Bank Insurance and Services Tax (BIST), which is equal to 5 percent of the interest amount paid, the Resource Utilization Support Fund (RUSF) fee equal to 6 percent of the interest amount paid, and a stamp tax equal to 0.6 percent of the principal. The Yucel Boru Group did not obtain any commercial short-term loans during the POR.

In addition, because the Department continues to consider Turkey to have high inflation based on a WPI rate of 81 percent, we also preliminarily determine that it is appropriate to use monthly average short-term interest rates (*see 1996 Preliminary Results,* 62 FR at 64809; *1995 Preliminary Results,* 62 FR at 16783, and *Pasta,* 61 FR at 30367). Therefore, where monthly company-specific interest rates for Mannesmann were not available for benchmark interest rates, we used the short-term interest rates published in *The Economist*. For all months for the Yucel Boru Group we used the short-term interest rates published in *The Economist*. The source cited in *The Economist* for its weekly short-term interest rates for Turkey is Akbank, which is a large privately-owned commercial bank in Turkey. We based the monthly interest rates used in our calculations on a simple average of the weekly figures corresponding for that month as reported in *The Economist*. While we considered other sources for short-term interest rates, including the International Monetary Fund (IMF) and the Organization for Economic Cooperation and Development (OECD), *The Economist* was the only source we found that published short-term lending rates for Turkey. Using these benchmark rates, we continue to find these pre-shipment export loans countervailable because the interest rate charged is less than the rate for comparable commercial loans that the company could actually obtain in the market. Therefore, this program provides both a financial contribution under section 771(5)(D)(i), and confers a benefit under section 771(5)(E)(ii) of the Act to the respondents.

Resolution Number: 94/5782, Article 4, effective June 13, 1994, allows for the exemption of certain fees that are normally charged on loans, provided that the loans are used in financing exportation and other foreign exchange earning activities. As discussed below, we have previously determined these exempted fees to be countervailable. For pre-shipment loans, which are denominated in TL, the fees that are exempted are the customary BIST, RUSF, and the stamp tax as described above. The Department's current practice is normally to compare effective interest rates rather than nominal rates. ''Effective'' interest rates are intended to take account of the actual cost of the loan, including the amount of any fees, commissions, compensating balances, government charges or penalties paid in addition to the ''nominal'' interest rate. Therefore, we have added the exempted customary banking fees to the benchmark interest rates obtained from *The Economist. See e.g., Certain Iron-Metal Castings from India: Final Results of Countervailing Duty Administrative Review,* 60 FR 44843 (August 29, 1995) (*Indian Castings*). *See also 1995 Preliminary Results,* 62 FR at 16784.

To determine the benefit in these reviews, we calculated the countervailable subsidy as the difference between actual interest paid on pre-shipment loans during the POR and the interest that would have been paid using the benchmark interest rates. This difference on the loans for each

month was indexed for inflation (as described above), and the result divided by the company's total export sales, which we also indexed for inflation. On this basis, we preliminarily determine the countervailable subsidy to be 0.84 percent *ad valorem* for the Yucel Boru Group for pipe and tube, and 0.19 percent *ad valorem* for Mannesmann for line pipe.

B. Foreign Exchange Loan Assistance

As discussed above, GRT Resolution Number: 94/5782 allows commercial banks to exempt certain fees on loans used in export related activities. We previously determined that use of this program is contingent upon export performance and, therefore, countervailable within the meaning of section 771(5A)(B). *See 1996 Preliminary Results*, 62 FR at 64810, and *1995 Preliminary Results*, 62 FR at 16784.

During the POR, Mannesmann received and paid interest on foreign currency loans from a commercial bank in connection with merchandise exported to the United States and was exempted from paying the customary BIST equal to 5 percent of the amount of interest paid, the RUSF fee equal to 6 percent of the principal, and the stamp tax equal to 0.6 percent of the principal. Unlike pre-shipment loans that are denominated in TL where the RUSF fee is 6 percent of the amount of interest paid, the RUSF fee for foreign currency loans is calculated as 6 percent of the principal.

We have previously determined that the BIST and RUSF fee exemptions are financial contributions within the meaning of section 771(5)(D)(ii) of the Act in the form of revenue foregone that is otherwise due, which provides a benefit in the amount of the exemption. *See, 1996 Preliminary Results*, 62 FR at 64810, and *1995 Preliminary Results*, 62 FR at 16785. We have also determined in the 1996 and 1995 reviews that the benefits are recurring because, once the company obtains a foreign currency loan, it is automatically exempted from paying the fees.

During the POR, Mannesmann obtained foreign currency loans that were tied to destinations other than the United States, and loans that were received for both U.S. and German shipments. The Yucel Boru Group did receive foreign currency loans in connection with merchandise exported to the United States during the POR.

To calculate the benefit for this program, we computed the exempted fees based on the amount of interest or principal paid during the POR for the foreign currency loans that Mannesmann received in connection with merchandise exported to the United States and Germany. We then indexed this benefit and divided the resultant amount by the company's (indexed) monthly total exports of the subject merchandise to the United States, and the company's total export sales of the subject merchandise to Germany. On this basis, we preliminarily determine the net subsidy to be 0.66 percent *ad valorem* for Mannesmann for line pipe, and zero for the Yucel Boru Group for pipe and tube. We have requested that Mannesmann provide its monthly total export sales to Germany in order to index these sales for inflation and more accurately calculate the *ad valorem* benefit for this program in the final determination.

C. Freight Program

Decree number 93/43, effective October 13, 1993, provided freight rebate payments to exporters expressed as $50 per ton for merchandise exported on Turkish vessels, and $30 per ton for merchandise exported on non-Turkish vessels, capped at 15 percent of the FOB value of the goods. Benefits under this program were provided in the form of 30 percent TL cash and 70 percent Turkish treasury bonds with one and two-year maturity dates. Companies were eligible to receive interest on bonds on the one-year anniversary date of the issuance of the bonds and on the date of the maturity of the bonds. The program was terminated on December 31, 1994, and there were no payments on shipments made after January 1, 1995.

In the 1996 and 1995 reviews, we determined that these cash grants and bonds are countervailable export subsidies within the meaning of section 771(5A)(B) of the Act because the benefit is contingent upon export performance. The grants and bonds are a direct transfer of funds from the GRT providing a benefit in the amount of the cash grants and bonds. We also determined that the benefits under the Freight Program are ''recurring'' because, once a company exported and submitted documentation to the Central Bank, it became eligible to regularly receive cash grants or bonds. The receipt of benefits is automatic and continued throughout the life of the program. (*1996 Preliminary Results*, 62 FR at 64811 and *1995 Preliminary Results*, 62 FR at 16785). *See also Allocation Section of the General Issues Appendix in Final Affirmative Countervailing Duty Determination: Certain Steel Products from Austria*, 58 FR 37217, 37268–69 (July 9, 1993) (*General Issues Appendix*).

During the POR, Mannesmann received cash and bonds under the freight rebate program based on exports made in 1994. The one-year bond matured in 1997, and the two-year bond matured in 1998. During the POR, the Yucel Boru Group did not receive any benefits under this program in connection with exports to the United States. Normally, the Department countervails the benefit on the date of receipt because that is when the benefit affects cash flow and business decisions. *See e.g., Ferrochrome from South Africa; Final Results of Countervailing Duty Administrative Review*, 56 FR 33254, 33255 (July 19, 1991). However, the Department makes an exception in the case of an export benefit that is calculated as a percentage of the FOB value on a shipment-by-shipment basis, and the amount of the benefit to be received is known at the time of export. *See e.g., Indian Castings*, at 60 FR 44843. Although the benefit under the freight program is calculated based on tonnage and not as a percentage of export value, we have said that a benefit determined by the amount of the tonnage may also be known at the time of export.

However, as previously determined in the 1996 review, the facts in this case establish that the exporter did not know the amount of benefit ultimately to be received at the time of export. Although the freight payments were stated in U.S. dollars per ton, the benefit was not tied to the U.S. dollar. Thus, because of high inflation in Turkey, the GRT's initial decision not to commit to the exchange rate existing either on the date of export, or on the date payment was received by the exporters, demonstrates that exporters could not know with certainty the value of the benefit at the time of export. In fact, it was not until February 1995, two months after the termination of the freight program, that the GRT announced that the benefit from this program would be based on the exchange rate that was in effect on December 31, 1994, regardless of when the shipments occurred.

Therefore, because the GRT only committed to an exchange rate after the date of export, given the high rate of inflation in Turkey, there was no way Mannesmann could have predicted at the time of export the amount of TL benefit that would be received. As a result, because Mannesmann could not know the exact amount of the TL benefit, or the U.S. dollar value of that TL benefit on the date of export, Mannesmann could not make business and pricing decisions until the actual receipt of the TL benefit. The TL amount ultimately received by

Mannesmann in 1997 did not correspond to the U.S. dollar value of the benefit granted by the GRT at the time of export. Therefore, we preliminarily determine that the benefits under this program are bestowed when the cash is received with respect to the cash payments, and not on the date of exportation. This position is consistent with the Department's analysis of a similar program in *Pasta*, where we determined that the benefit should be treated as having been bestowed when the cash was received rather than earned. (*See* discussion of *Payments for Exports on Turkish Ships* program in *Pasta*, 61 FR at 30369).

With regard to the bonds portion of the rebate, we previously determined that the benefits from the bonds are bestowed on the date of maturity. *See 1995 Preliminary Results*, 62 FR at 16785. Although there were no restrictions on the sale or transfer of the bonds, there has been no secondary market to allow exporters to convert their bonds to cash because of the rate of inflation. Therefore, the exporters have no choice but to hold the bonds until maturity. *See* also *Pasta*, 61 FR at 30368.

The benefits under the freight program are made on a shipment-by-shipment basis. Therefore, where a benefit is tied or can be tied to exports to the United States, we calculate the *ad valorem* subsidy rate by dividing the benefit by the firm's total exports to the United States. *See e.g., Notice of Final Results of Countervailing Duty Administrative Review: Roses and Other Cut Flowers from Colombia*, 52 FR 48847, 48848 (December 28, 1987). We have calculated the benefit for Mannesmann from this program by dividing the total amount of cash payments, which includes interest on the bonds and matured bonds (indexed for inflation) by total exports to the United States during the POR (indexed for inflation). On this basis, we preliminarily determine the net subsidy to be 3.43 percent *ad valorem* for Mannesmann for line pipe, and zero for the Yucel Boru Group for pipe and tube.

II. Program Preliminarily Determined To Be Not Countervailable

Special Importance Sector Under Investment Allowances

During the POR, the Yucel Boru Group was entitled to receive a 100 percent investment allowance because it made an investment in a ''special importance sector.'' The special importance sector is a provision under the Investment Allowance program that allows companies a 100 percent corporate tax deduction of their fixed investment, regardless of the region in which the investment is made.

In order to determine whether the ''special importance sector'' benefits are specific, in law or in fact, to an enterprise or industry, section 771(5A)(D) directs the Department to consider the following factors:

1. whether the enabling legislation expressly limits access to the subsidy to an enterprise or industry;
2. whether the actual recipients of the subsidy, whether considered on an enterprise or industry basis, are limited in number;
3. whether an enterprise or industry is a predominant user of the subsidy;
4. whether an enterprise or industry receives a disproportionately large amount of the subsidy; and
5. the manner in which the authority providing the subsidy has exercised discretion in the decision to grant the subsidy indicates that an enterprise or industry is favored over others.

An analysis of the first factor shows that the enabling legislation does not expressly limit access to an enterprise or industry; therefore, the subsidy is not specific as a matter of law.

With respect to whether the benefits are specific, the GRT provided information regarding the total number of certificates issued to the various industries within each sector, the total investment, and the total fixed investment for each industry and sector. This data shows that more than 4,500 certificates were issued to different companies in numerous and varied industries and regions throughout Turkey. The data also shows that the iron and steel industry was not a predominant user, nor did it receive a disproportionate share of the benefits during the POR. Therefore, we preliminarily determine this program not to be countervailable.

III. Programs Preliminarily Determined To Be Not Used

We examined the following programs and preliminarily determined that the producers and/or exporters of the subject merchandise did not apply for or receive benefits under these programs during the POR:

A. Resource Utilization Support Fund
B. State Aid for Exports Program
C. Advance Refunds of Tax Savings
D. Export Credit Through the Foreign Trade Corporate Companies Rediscount Credit Facility (Eximbank)
E. Past Performance Related Foreign Currency Export Loans (Eximbank)
F. Export Credit Insurance (Eximbank)
G. Subsidized Turkish Lira Credit Facilities
H. Subsidized Credit for Proportion of Fixed Expenditures
I. Fund Based Credit
J. Investment Allowances (in excess of 30% minimum)
K. Resource Utilization Support Premium (RUSP)
L. Incentive Premium on Domestically Obtained Goods
M. Deduction from Taxable Income for Export Revenues
N. Regional Subsidies
  1. Additional Refunds of VAT (VAT + 10%)
  2. Postponement of VAT on Imported Goods
  3. Land Allocation (GIP)
  4. Taxes, Fees (Duties), Charge Exemption (GIP)

IV. Program Preliminarily Determined To Be Terminated

Export Incentive Certificate Customs Duty & Other Tax Exemptions

Communique No. 96/1 dated January 5, 1996, rescinded Communique No. 95/7, which provided export incentive certificates for the exclusion of taxes and duties, effective January 1, 1996. There are no residual benefits accruing from this program. Therefore, we preliminarily determine that the program has been terminated.

Preliminary Results of Review

In accordance with 19 CFR 351.221(b)(4)(i), we calculated an individual subsidy rate for each producer/exporter subject to these administrative reviews. For the period January 1, 1997 through December 31, 1997, we preliminarily determine the net subsidy for Mannesmann to be 4.28 percent *ad valorem* for line pipe, and 0.84 percent *ad valorem* for Yucel Boru for pipes and tubes. If the final results of this review remain the same as these preliminary results, the Department intends to instruct the U.S. Customs Service (Customs) to assess countervailing duties as indicated above. The Department would also instruct Customs to collect cash deposits of estimated countervailing duties as indicated above based on the f.o.b. invoice price on all shipments of the subject merchandise from reviewed companies, entered, or withdrawn from warehouse, for consumption on or after the date of publication of the final results of this review.

Because the URAA replaced the general rule in favor of a country-wide rate with a general rule in favor of individual rates for investigated and reviewed companies, the procedures for establishing countervailing duty rates, including those for non-reviewed companies, are now essentially the same as those in antidumping cases, except as

provided for in section 777A(e)(2)(B) of the Act. The requested review will normally cover only those companies specifically named. *See* 19 CFR 351.213(b). Pursuant to 19 CFR 351.212(c), for all companies for which a review was *not* requested, duties must be assessed at the cash deposit rate, and cash deposits must continue to be collected, at the rate previously ordered. As such, the countervailing duty cash deposit rate applicable to a company can no longer change, except pursuant to a request for a review of that company. *See Federal-Mogul Corporation and The Torrington Company* v. *United States*, 822 F. Supp. 782 (CIT 1993) and *Floral Trade Council* v. *United States*, 822 F. Supp. 766 (CIT 1993). Therefore, the cash deposit rates for all companies except those covered by this review will be unchanged by the results of this review.

We will instruct Customs to continue to collect cash deposits for non-reviewed companies at the most recent company-specific or country-wide rate applicable to the company. Accordingly, the cash deposit rates that will be applied to non-reviewed companies covered by this order will be the rate for that company established in the most recently completed administrative proceeding under the Act, as amended by the URAA. If such a review has not been conducted, the rate established in the most recently completed administrative proceeding conducted pursuant to the statutory provisions that were in effect prior to the URAA amendments is applicable. *See, Certain Welded Carbon Steel Pipe and Tube Products from Turkey; Final Results of Countervailing Duty Review*, 53 FR 9791 (March 25, 1988). These rates shall apply to all non-reviewed companies until a review of a company assigned these rates is requested. In addition, for the period January 1, 1997 through December 31, 1997, the assessment rates applicable to all non-reviewed companies covered by this order are the cash deposit rates in effect at the time of entry.

Public Comment

Pursuant to 19 CFR 351.224(b), the Department will disclose to parties to the proceeding any calculations performed in connection with these preliminary results within five days after the date of publication of this notice. Pursuant to 19 CFR 351.309, interested parties may submit written comments in response to these preliminary results. Case briefs must be submitted within 30 days after the date of publication of this notice, and rebuttal briefs, limited to arguments raised in case briefs, must be submitted no later than five days after the time limit for filing case briefs. Parties who submit argument in this proceeding are requested to submit with the argument: (1) a statement of the issues, and (2) a brief summary of the argument. Case and rebuttal briefs must be served on interested parties in accordance with 19 CFR 351.303(f). Also, pursuant to 19 CFR 351.310, within 30 days of the date of publication of this notice, interested parties may request a public hearing on arguments to be raised in the case and rebuttal briefs. Unless the Secretary specifies otherwise, the hearing, if requested, will be held two days after the date for submission of rebuttal briefs. The Department will publish the final results of these administrative reviews, including the results of its analysis of issues raised in any case or rebuttal brief or at a hearing.

These administrative reviews are issued and published in accordance with section 751(a)(1) and 777(i)(1) of the Act (19 U.S.C. 1675(a)(1) and 19 U.S.C. 1677f(i)(1)).

Dated: March 31, 1999.

Robert S. LaRussa,

Assistant Secretary for Import Administration.

[FR Doc. 99–8627 Filed 4–6–99; 8:45 am]

BILLING CODE 3510–DS–P

DEPARTMENT OF COMMERCE

International Trade Administration

Export Trade Certificate of Review

ACTION: Notice of Application.

SUMMARY: The Office of Export Trading Company Affairs (''OETCA''), International Trade Administration, Department of Commerce, has received an application for an Export Trade Certificate of Review. This notice summarizes the conduct for which certification is sought and requests comments relevant to whether the Certificate should be issued.

FOR FURTHER INFORMATION CONTACT: Morton Schnabel, Director, Office of Export Trading Company Affairs, International Trade Administration, (202) 482–5131. This is not a toll-free number.

SUPPLEMENTARY INFORMATION: Title III of the Export Trading Company Act of 1982 (15 U.S.C. 4001–21) authorizes the Secretary of Commerce to issue Export Trade Certificates of Review. A Certificate of Review protects the holder and the members identified in the Certificate from state and federal government antitrust actions and from private, treble damage antitrust actions for the export conduct specified in the Certificate and carried out in compliance with its terms and conditions. Section 302(b)(1) of the Act and 15 CFR 325.6(a) require the Secretary to publish a notice in the **Federal Register** identifying the applicant and summarizing its proposed export conduct.

Request for Public Comments

Interested parties may submit written comments relevant to the determination whether a Certificate should be issued. If the comments include any privileged or confidential business information, it must be clearly marked and a nonconfidential version of the comments (identified as such) should be included. Any comments not marked privileged or confidential business information will be deemed to be nonconfidential. An original and five copies, plus two copies of the nonconfidential version, should be submitted no later than 20 days after the date of this notice to: Office of Export Trading Company Affairs, International Trade Administration, Department of Commerce, Room 1104H, Washington, D.C. 20230. Information submitted by any person is exempt from disclosure under the Freedom of Information Act (5 U.S.C. 552). However, nonconfidential versions of the comments will be made available to the applicant if necessary for determining whether or not to issue the certificate. Comments should refer to this application as ''Export Trade Certificate of Review, application number 99–00002.'' A summary of the application follows.

Summary of the Application:

Applicant: DecoArt, Inc., Highway 150 and 27, Stanford, Kentucky 40484.

Contact: Martin R. Snyder, Attorney,

Telephone: (502) 562–7505,

Application No.: 99–00002,

Date Deemed Submitted: March 29, 1999,

Members (in addition to applicant): None.

DecoArt, Inc. seeks a Certificate to cover the following specific Export Trade, Export Markets, and Export Trade Activities and Methods of Operations.

Export Trade

1. *Products*

Artists acrylic paints and decorative finishes.

2. *Services*

All services related to the export of Products.

3. *Technology Rights*

All intellectual property rights associated with Products or Services,

including, but not limited to: patents, trademarks, service marks, trade names, copyrights, neighboring (related) rights, trade secrets, know-how, and sui generis forms of protection for databases and computer programs.

4. *Export Trade Facilitation Services (as they Relate to the Export of Products, Services and Technology Rights)*

Export Trade Facilitation Services, including, but not limited to: professional services in the area of government relations and assistance with state and federal export programs; foreign trade and business protocol; consulting; market research and analysis; collection of information on trade opportunities; marketing; negotiations; joint ventures; shipping and export management; export licensing; advertising; documentation and services related to compliance with custom requirements; insurance and financing; bonding; warehousing; export trade promotion; legal assistance; trade show exhibitions; organizational development; management and labor strategies; transfer of technology; transportation; and facilitating the formation of shippers' associations.

Export Markets

The Export Markets include all parts of the world except the United States (the fifty states of the United States, the District of Columbia, the Commonwealth of Puerto Rico, the Virgin Islands, American Samoa, Guam, the Commonwealth of the Northern Mariana Islands, and the Trust Territory of the Pacific Islands).

Export Trade Activities and Methods of Operation

DecoArt, Inc. may:

1. Provide and/or arrange for the provision of Export Trade Facilitation Services;

2. Engage in promotion and marketing activities and collect and distribute information on trade opportunities in the Export Markets;

3. Enter into, terminate, amend or enforce exclusive and/or non-exclusive agreements with distributors, foreign buyers, and/or sales representatives in Export Markets, and oblige such distributors, foreign buyers, and/or sales representatives not to deal in goods competing with those supplied by DecoArt, Inc.;

4. Enter into, terminate, amend or enforce exclusive or non-exclusive licensing agreements regarding Products, Services, or Technology Rights with Suppliers, Export Intermediaries, or other persons in Export Markets;

5. Enter into, terminate, amend or enforce exclusive or non-exclusive sales agreements with Suppliers, Export Intermediaries, or other persons for the transfer of title to Products, Services, and/or Technology Rights in Export Markets;

6. Enter into, terminate, amend or enforce exclusive or non-exclusive pricing and/or consignment agreements for the sale and shipment of Products and Services to Export Markets;

7. Allocate export sales, export orders and/or divide Export Markets, among Suppliers, Export Intermediaries, or other persons for the sale, licensing and/or transfer of title to Products, Services, and/or Technology Rights;

8. Enter into, terminate, amend or enforce territorial and customer restraints on Suppliers, Export Intermediaries, or other persons regarding the sale, licensing and/or transfer of title to Products, Services, and/or Technology Rights;

9. Enter into, terminate, amend or enforce exclusive or non-exclusive price and/or territorial agreements with U.S. Suppliers;

10. Enter into, terminate, amend or enforce exclusive or non-exclusive agreements for the tying of Products and Services, the setting of prices, and/or the distribution, shipping or handling of Products or Services in the Export Markets;

11. Terminate, amend or enforce contractual or other relationships with Suppliers, Export Intermediaries or other persons who refuse to agree or adhere to restraints on their activities related to export of Products;

12. Enter into, terminate, amend or enforce agreements to invest in overseas warehouses for the purpose of storing exported Products until transferred to the foreign purchaser, or to invest in overseas facilities for the purpose of making minor Product or packaging modifications necessary to insure compatibility of the Product with the requirements of the foreign market;

13. Represent U.S. Suppliers at trade shows and solicit agents and distributors for their Products in the Export Markets;

14. Refuse to quote prices for, or to market or sell, Products or Services to an Export Market or Markets, or to distributors, buyers and/or sales representatives who directly or indirectly market or sell to an Export Market or Markets;

15. Sell, or offer to sell Products at different prices for direct or indirect sale to an Export Market or Markets as compared to prices for direct or indirect sale to domestic markets; and

16. Affix labels or other forms of identification to Products which identify the Products and indicate whether such Products are for direct or indirect sale only in an Export Market or Markets.

Definitions

1. ''Export Intermediary'' means a person who acts as a distributor, sales representative, sales or marketing agent, or broker, or who performs similar functions including providing or arranging for the provision of Export Trade Facilitation Services.

2. ''Supplier'' means a person who produces, provides, or sells any Product and/or a Service.

Dated: April 2, 1999.

Morton Schnabel,

Director, Office of Export Trading Company Affairs.

[FR Doc. 99–8589 Filed 4–6–99; 8:45 am]

BILLING CODE 3510–DR–P

DEPARTMENT OF COMMERCE

National Oceanic and Atmospheric Administration

ENVIRONMENTAL PROTECTION AGENCY
NATIONAL SCIENCE FOUNDATION
DEPARTMENT OF DEFENSE

Office of Naval Research

NATIONAL AERONAUTICS AND SPACE ADMINISTRATION

[Docket No. 990203 041–9041–01; I.D. No. 020299B]

RIN 0648–ZA60

Request for Proposals for the Ecology and Oceanography of Harmful Algal Blooms Project

AGENCIES: The Coastal Ocean Program and the National Sea Grant College Program/National Oceanic and Atmospheric Administration (NOAA)/Commerce; the National Center for Environmental Research and Quality Assurance/Environmental Protection Agency(EPA); the Directorate for Geosciences, Division of Ocean Sciences/National Science Foundation(NSF); the Office of Naval Research(ONR) /Department of Defense; and the Office of Earth Science/National Aeronautics Space Administration(NASA).

ACTION: Supplemental notification for financial assistance for project grants.

SUMMARY: The purpose of this notice is to advise the public that the NOAA Coastal Ocean Program(COP), the NOAA National Sea Grant College Program, the EPA National Center for Environmental Research and Quality Assurance, the NSF Directorate for

Geosciences, Division of Ocean Sciences, the Department of Defense/ Office of Naval Research, and the Office of Earth Science, National Aeronautics and Space Administration are soliciting research proposals of 1 to 5 years in duration for the Ecology and Oceanography of Harmful Algal Blooms (ECOHAB) program. This program provides support for research on all aspects of harmful algal bloom(HAB) ecology and oceanography in U.S. coastal waters. This document details the requirements for applications for research support to address general HAB ecology and oceanography that will be considered by the Federal research partnership consisted of NOAA, NSF, EPA, ONR, and NASA.

DATES: The deadline for proposals is June 7, 1999, by 3:00 PM, EST.

ADDRESSES: Submit the original and two copies of your proposal to Coastal Ocean Program Office (ECOHAB 99), SSMC#3, 9th Floor, Room 9752, 1315 East-West Highway, Silver Spring, MD 20910. NOAA Standard Form Applications with instructions are accessible on the following COP Internet Site in a read-only format. Blank Forms may be printed out, but information cannot be saved to the web site, nor transmitted electronically to NOAA.

http://www.cop.noaa.gov

FOR FURTHER INFORMATION CONTACT:

Technical Information: Dr. Kevin Sellner, ECOHAB Coordinator, COP Office, 301–713–3338/ext 127, Internet: ksellner@cop.noaa.gov.

Business Management: Leslie McDonald, COP Grants Office, (301) 713–3338/ext 137, Internet: Leslie.McDonald@noaa.gov.

If you have Brown Tide Research Initiative (BTRI) related questions, contact Sue Banahan, COP Office, 301–713–3338/ext 115, Internet: sbanahan@cop.noaa.gov. More information on the BTRI research program is available through the World Wide Web on New York Sea Grant's website (http://www.seagrant.sunysb.edu/pages/btri.htm), or by contacting Cornelia Schlenk of New York Sea Grant (NYSG) at 516–632–6906, Internet: cschlenk@ccmail.sunysb.edu.

SUPPLEMENTARY INFORMATION:

Background

Program Description: For complete Program Description and Other Requirements criteria for the Coastal Ocean Program, see COP's General Grant Administration Terms and Conditions initial notice in the **Federal Register** (63 FR 44237, August l8, 1998) and at internet site: http://www.cop.noaa.gov.

Harmful Algal Blooms(HABs) include toxic and noxious phytoplankton (including Pfiesteria-like organisms) and benthic algae. Evidence suggests that, over the last few decades, the frequency and duration of HABs have been increasing nationally and worldwide. Formerly, only a few regions of the U.S. were affected by HABs, but now virtually every coastal state has reported major blooms. In many cases, blooms extend over large geographic areas and are composed of more than one harmful or toxic species. Furthermore, HABs are not unique to the United States and have attracted interest from many countries that have commercial and recreational activities in the coastal ocean. Most recently, a Intergovernmental Oceanographic Commission-Scientific Committee on Oceanic Research workshop (GEOHAB, Global Ecology and Oceanography of HABs) in Denmark convened to consider the establishment of an international research program on the increasing problem of HABs in our world's coastal oceans.

In spite of a growing list of affected resources, our understanding of the biological, physical, and chemical processes that regulate HABs is limited. Toxic blooms can potentially impact virtually all compartments of the marine foodweb due to adverse effects on viability, growth, fecundity, and recruitment of marine organisms. Because toxins can move through ecosystems, the impacts can be far reaching. Likewise, dramatic shifts in structure of an ecosystem can accompany plankton blooms and macroalgal overgrowth in benthic systems. In the context of ecological effects, our present knowledge is inadequate to define the scale and complexity of many HAB phenomena.

Impacts of HABs are extensive. Periodic blooms in some coastal areas have caused collapse of ecosystems, with accompanying serious economic impacts. Economic losses in the U.S. from HABs are likely to exceed one billion dollars over several decades. The costs of HABs are included in toxin monitoring programs, closures of shellfish beds, collapse of some fisheries and shellfisheries, mortality of fish and shellfish, disruptions in tourism, threats to public and coastal resource health, publication of watershed, health and seafood advisories, and medical treatments.

HABs are not only economically costly, but they also cause severe human health effects. Human illnesses due to natural algal toxins include ciguatera fish poisoning, paralytic shellfish poisoning (PSP), amnesic shellfish poisoning (ASP), neurotoxic shellfish poisoning, diarrhetic shellfish poisoning, and short-term neurocognitive dysfunction from exposure to *Pfiesteria piscicida*. Severe cases of PSP and ASP can result in death within 24 hours of consuming the toxic shellfish from respiratory arrest and brain dysfunction. Additionally, ASP can have the devastating side effect of permanent memory loss.

The interagency ECOHAB program addresses the need for long-term, large-scale, multidisciplinary research, and is outlined in the report,'' ECOHAB, the Ecology and Oceanography of Harmful Algal Blooms'' (Anderson, D.M. 1995. WHOI, Woods Hole, MA, 66 pp.; http://habserv1.whoi.edu/hab/nationplan/ECOHAB/PDF/ECOHABPDF.html). The primary objective of this notice is to solicit proposals for research on the environmental processes that facilitate and regulate HABs in the coastal ocean. Developing an understanding of how physical and biological processes interact to promote bloom development, maintenance, and decline will contribute to the ultimate goal of preventing, managing, controlling, and mitigating the impacts of HABs, outlined in the nation's comprehensive Federal approaches, ''Marine Biotoxins and Harmful Algae: A National Plan'' (Anderson, D.M., S.B. Galloway, and J.D. Joseph. 1993. WHOI Technical Report 93–02, Woods Hole Oceanographic Institution, Woods Hole, MA 44 pp.; http://www.redtide.whoi.edu/hab/nationplan/s-kplan/s-kcontents.html) and ''Harmful Algal Blooms in Coastal Waters: Options for Prevention, Control, and Mitigation'' (Boesch, D.F. *et al* 1997. NOAA COP Decision Analysis Series No.10, NOAA Coastal Ocean Office, Silver Spring, MD 46 pp.).

To address the increased need for research on HABs, NOAA, NSF, EPA, ONR, and NASA combine each agency's unique interests and missions into this coordinated research program. The interests and objectives of each agency are defined in the following paragraphs:

NOAA—HABs and related biotoxin risk must be managed if we are to build viable and valuable sustainable fisheries, protect threatened and endangered species, and effectively manage coastal activities and resources. NOAA's interest is in developing effective techniques for prevention, control, and mitigation to assist in reducing the impacts of HABs on public health, living marine resources, and coastal habitats. Developing predictive

and early warning capabilities for HABs is a specific area of emphasis.

NSF—Many aspects of species-specific dynamics of plankton, macroalgal populations, and species succession that contribute to bloom formation are poorly understood. NSF's interest is in increasing our understanding of the direct and indirect causes of HABs in our coastal regions and their ecological consequences through research on the physiological and ecological basis for bloom formation, the physical and chemical attributes of coastal oceans that facilitate them, the population attributes of bloom species, and the long-term consequences of ecosystem changes.

EPA—Research programs support an integrated approach to protect the integrity of ecosystems that are affected by blooms through the development of bioindicators for toxic forms of HABs and through the restoration of degraded ecosystems using a watershed approach. Specific areas of emphasis for ecosystem protection related to Pfiesteria and other HABs include the impact of nutrients from agricultural activities and other non-point sources of pollution with investigations conducted at the regional or watershed scale.

ONR—Plankton blooms resulting from complex coupled physical/biological processes strongly affect the physical, optical, and acoustic properties of the coastal ocean. ONR's interest is in characterizing and forecasting the physical, bioacoustical, and optical properties of blooms to improve the capability of the fleet to operate effectively within coastal environments worldwide.

NASA—Algal pigments affect optical properties of the water in well-characterized ways. In the open ocean, it is possible to quantify pigment concentration using remote sensing techniques because phytoplankton are solely responsible for variation in water color. In nearshore, estuarine, and inland waters, suspended sediments and dissolved organic compounds make the optical properties much more complex. The goal of detecting algal blooms in the presence of other colored materials is the subject of ongoing research. NASA is interested in developing remote sensing techniques that could be applied to the detection or tracking of harmful algal blooms in nearshore coastal environments.

Research Goals and Topical Areas:

A. The specific goals of the research solicited by this notice are to:

(1) Understand the causes of blooms;

(2) Determine the sources, fates, and consequences of HABs in foodwebs and fisheries;

(3) Develop an enhanced predictive and early warning capability for the occurrence and impact of HABs; and

(4) Explore means for prevention, mitigation, and control of HABs.

B. To address these needs, ECOHAB will support research on general themes of:

(1) Characterization and detection of HAB cells, life stages, and toxins;

(2) Mechanisms underlying the initiation, distribution, and accumulation of individual bloom-forming species;

(3) Physiological and biochemical bases of the ecological role of toxins in bloom-forming species;

(4) Physical and biological processes that influence the transport, fate, and effects of marine biotoxins and other HAB impacts;

(5) The influence of human and natural factors on the biophysical mechanisms that facilitate and regulate HABs, including detection and tracking of conditions suspected of being conducive to bloom formation and potential methods of control;

(6) Longer term consequences of ecosystem changes brought about by the increasing frequency and persistence of planktonic blooms and community alterations that can accompany macroalgal overgrowth in benthic systems; and

(7) Development of models of the physical, biogeochemical, and ecological processes that can ultimately lead to HAB prediction.

A significant challenge to the implementation of this program is that HAB phenomena are diverse with respect to the causative organisms involved, the hydrographic or environmental regimes in which they occur, the factors regulating bloom dynamics, and the nature and extent of their impacts. Whereas laboratory research helps define factors that could be significant in causing blooms, field research and model development are essential to determine and predict the conditions under which blooms form. Comprehensive multidisciplinary studies are needed to fully understand the complex mechanisms underlying the growth and accumulation of harmful species, the formation, transfer, and fate of toxins, the impacts of HABs and toxins on ecosystems, and the influence of human activities on these processes.

This announcement provides an opportunity for investigators to propose research to address the national problem of HABs. Proposals are sought for individual studies or small interdisciplinary efforts that address gaps in knowledge related to the nature of HAB phenomena. These studies should address fundamental ecological and oceanographic questions related to HABs. For example, individual studies by one or more investigators or by small teams could address such research issues as physical transport and techniques for identifying, detecting, and monitoring biotoxins and HAB species.

Studies of nutrient kinetics, physiological bases of growth and toxin production for harmful species, toxin transfer through the foodweb, and mechanisms for controlling blooms would be of interest. The purpose of the individual studies is to encourage research into key questions on the underlying mechanisms involved with HABs and their control, without necessarily being limited to particular study regions.

Proposals are sought for the following four topical areas:

(1) Ecology and oceanography of HABs, including Pfiesteria,

(2) Long Island brown tides,

(3) Prevention, control, and mitigation of HABs impacting fisheries, aquaculture, and human health, and

(4) Economic assessments of HABs.

The following describe in detail the type of proposals sought for each topical area:

(1) Proposals on the ecology and oceanography of HAB species, including Pfiesteria, are encouraged, with support provided by NOAA, NSF, and EPA. This is a broad category that encourages proposals on all aspects of HABs and Pfiesteria along U.S. coasts. Proposals addressing prevention, control, and mitigation of Pfiesteria will be considered as part of this topical area; proposals addressing mitigation, management, and control of other HAB species are to be submitted to the National Sea Grant College Program topical area three.

(2) Proposals of 1 to 3 years in duration are sought to address the gaps in knowledge of factors leading to the initiation, persistence, and subsidence of brown tide (*Aureococcus anophagefferens*) in New York's embayments. The NOAA Coastal Ocean Program (COP), in cooperation with New York Sea Grant, established the Brown Tide Research Initiative (BTRI). The goal of this program is to understand and predict the onset of brown tide blooms and to advance strategies for mitigating its environmental impacts.

Proposals applying for BTRI funds should address one or more of ECOHAB goals under Section A.,(1)(3) and/or (4) and research themes under Section B., (2)(5) and/or (7) in the context of the

specific scientific objectives of the BTRI. Those objectives are:

(a) Identification of the physical, chemical, and biological factors that initiate and sustain brown tide blooms. Investigations into a range of factors will be considered. Of special interest are laboratory, mesocosm, and field studies in the areas of growth physiology of Aureococcus; nutrient (and other growth factors) budgets in affected areas, including the role of groundwater and its constituents; water column conditioning; benthic-pelagic coupling; dynamics of brown tide blooms and other resident planktonic communities; and the role of allelopathy in brown tide blooms. Retrospective analysis and synthesis of existing data and information that can explain and predict brown tide events will also be considered (e.g., examinations of water quality monitoring data sets and previous studies).

(b) Techniques to isolate and maintain axenic cultures of Aureococcus.

(c) Identification of the factors leading to the cessation of brown tide blooms. This may include investigations on activities of viruses and other pathogens, autolysis, and ecology of the resident grazing community.

Research should be hypothesis-based and focused on understanding the causes of brown tide blooms, with the goal to advance information for developing approaches to avoid or minimize these blooms. Geographically, this effort is focused on New York's affected bays (e.g., the Peconic Bays and the South Shore Estuary). It is expected that information gained in this study will provide insight useful in understanding and managing brown tide occurrences in Rhode Island and New Jersey and will shed light on other harmful algal bloom phenomena. Investigators will be expected to justify proposed research within the context of proposed or on-going work and build upon rather than repeat previous experimental efforts.

(3) NOAA's National Sea Grant College Program solicits proposals that focus on two topical areas. The first of these two are the development of mitigation, management, and potential control strategies to enhance our ability to protect commercially important fisheries, aquaculture, and human health from the impacts of HAB species other than Pfiesteria.

(4) The National Sea Grant College Program is also interested in requests specific to the assessment of the economic impacts of HABs (including Pfiesteria) in order to evaluate the cost-effectiveness of potential management actions.

Part I: Schedule and Proposal Submission

The guidelines for proposal preparation provided here are mandatory. Proposals received after the published deadline or proposals that deviate from the prescribed format will be returned to the sender without further consideration. This announcement and additional background information will be made available on the COP home page on the World Wide Web at http://www.cop.noaa.gov.

ECOHAB will support projects ranging from laboratory studies by individual investigators or by small research teams through coordinated, well-integrated, multidisciplinary field programs. Studies will also be supported to develop predictive models and address gaps in knowledge related to mechanisms that regulate harmful algal species, including Pfiesteria and related taxa. While the agencies will maintain separate funding mechanisms, a common review process will be used to evaluate and select proposals.

Upon conclusion of external peer and panel merit review, meritorious proposals may be recommended for funding by any of the agencies. Subsequent grant administration procedures will be in accordance with the individual policies of the awarding agency. In addition to the extramural funding, NOAA and other permitted Federal partnering agencies may fund investigators from other Federal laboratories that successfully compete through the ECOHAB Program announcement. To address the increased need for research on HABs, NOAA, NSF, EPA, ONR, and NASA combine each agency's unique interests and missions into this coordinated research program.

Full Proposals

Letters of Intent and/or partial proposals are not requested under this notice. Applications must include the original and two unbound copies of the full proposal. Investigators are not required to submit more than three copies of the proposal; however, the normal review process requires twenty copies. Investigators are encouraged to submit sufficient proposal copies for the full review process if they wish all reviewers to receive color or otherwise unusual materials submitted as part of the proposal. Facsimile transmissions and electronic mail submission of full proposals will not be accepted.

Required Elements

All applicants must closely follow the instructions and guidelines in the Standard NOAA Application Forms and Kit (see Part II) for preparation of the proposal.

Each proposal must include the following eight elements:

(1) Signed summary title page. The title page should be signed by the principal investigator (PI) and the institutional representative. The summary title page identifies the project's title starting with the acronym ECOHAB, a short title (less than 50 characters), and the lead PI's name and affiliation, complete address, phone, FAX and e-mail information.

(2) One-page abstract/project summary. An abstract must be included and should contain an introduction of the problem, rationale, scientific objectives and/or hypotheses to be tested, and a brief summary of work to be completed. The abstract should appear on a separate page, headed with the proposal title, institution(s), investigator's name(s), total proposed cost, and budget period.

(3) Statement of work/project description. The first section of the project description must be a summary of previous relevant research. This section should also include the following: (a) the objective for the period of proposed work and its expected significance; (b) the relation to the present state of knowledge in the field and relation to previous work and work in progress by the proposing principal investigator(s); (c) a discussion of how the proposed project lends value to the program goals; and (d) specific plans for making research products generated in the project, such as environmental data, cultures, genetic sequences, etc., available to the scientific community. NOAA and NSF have specific requirements that environmental data be submitted to the National Oceanographic Data Center; participating agencies may have additional requirements or guidelines for sharing of research materials and data.

Project management should be clearly identified with a description of the management function within a team. It is important to provide a full scientific justification for the research; do not simply reiterate justifications presented in this notice.

The project description section should not exceed 15 pages. Page limits are inclusive of figures and other visual materials, but exclusive of references and milestone chart. The type size must be clear and readily legible, in 12 point size. There must be no more than 6 lines in a vertical space of 2.5 cm, and margins at the top, bottom, and each

side of pages should be a minimum of 2.5 cm.

(4) Milestone chart. Time lines of major tasks covering the duration of the proposed project - up to 60 months.

(5) Budget. Applicants must submit the Facesheet, Standard Form 424 (Rev July 1997), ''Application for Federal Assistance'', to indicate the total amount of funding proposed for the whole project period. Proposals must also include annual budgets that correspond with the descriptions provided in the statement of work. Therefore, applicants are also required to submit the Standard Form 424A (Rev 7–97), ''Budget Information - Non-Construction Programs'' in order to provide a detailed budget for fiscal year increments.

Include a budget narrative/justification to support all proposed budget object class categories. Note that, for multiyear project periods, the out-year budget estimates are to be included in Section E on Standard Form 424A. These forms are included on the COP website listed under Part II, Application Forms and Kit. The program office shall review the proposed budgets to determine the necessity and adequacy of proposed costs for accomplishing the objectives of the proposed grant.

NSF requests information on ship requirements in order to schedule time on University-National Oceanographic Laboratory System (UNOLS) vessels as NSF might fund any of the proposals submitted. Ship requirements and costs do not need to be included on the budget forms SF–424 or SF–424A, but must be separately identified by submitting a NSF-UNOLS Ship Time Request Form (OMB #3145–0058, expiration date September 1999) identifying ship, sea days, ship requirements (berths, labs, wire capabilities, special equipment, etc). Support of ships required for field studies are a significant cost that will be evaluated in any proposals for funding, so the need should be adequately justified within the project description. The funding mechanism for ship time is agency specific.

The NSF form is included as Appendix A, ''Instructions for Preparation of Proposals Requesting Support for Oceanographic Facilities'', NSF 94–124. The form is also available via the UNOLS web site at ttp://www.gso.uri.edu/unols/ship/shiptime.html. Paper copies may be requested from UNOLS, but the electronic version is strongly preferred for ease of information exchange and processing. The investigator is responsible for sending copies to the UNOLS office and ship operators. If no ship time is required, submit the UNOLS form and indicate that no shiptime is required.

(6) Biographical sketch. All senior personnel must provide two-page summaries that include the following:

(a) A listing of professional and academic essentials and mailing address;

(b) A list of up to five publications most closely related to the proposed project and five other significant publications, within the last five years. Additional lists of publications, lectures, etc., should not be included;

(c) A list of all persons and their organizational affiliation in alphabetical order who have collaborated on a project or publication within the last 48 months, including collaborators on the proposal and persons listed in the publications. If there are no collaborators, this should be so indicated;

(d) A list of persons (including their organizational affiliation), with whom the individual has had an association as thesis advisor or postdoctoral scholar sponsor;

(e) A list of the names and institutions of the individual's own graduate and postgraduate advisors.

The material presented in (c)(d) and (e) is used to assist in identifying potential conflicts or bias in the selection of reviewers.

(7) Current and pending support. NSF requires information on current and pending support of all proposers. Describe all current and pending support for all PIs, including subsequent funding in the case of continuing grants. A model format is available on NSF Form 1239, available at http://www.nsf.gov/cgi-bin/getpub?99form1239. This form is part of the NSF Grant Proposal Guide and Proposal Forms Kit. Use of this form is optional; however, the categories of information included on the NSF Form 1239 must be provided.

All current support from whatever source (e.g., Federal, state or local government agencies, private foundations, industrial or other commercial organizations) must be listed. The proposed project and all other projects or activities requiring a portion of time of the PI and other senior personnel should be included, even if they receive no salary support from the project(s). The total award amount for the entire award period covered (including indirect costs) should be shown, as well as the number of person-months per year to be devoted to the project, regardless of source of support.

(8) Appendices. The only material permitted in the Appendix is an EPA quality assurance (QA) statement (QANS, OMB #2080–0033, approved 8/14/97) for proposals for topical area (1), general HAB research (including Pfiesteria) that involve data collection or processing, surveys, environmental measurements, and/or modeling. The statement simply indicates how quality processes or products will be assured. This statement should not exceed two consecutively numbered, 8.5 x 11–inch pages of single-spaced standard 12–point type with 1–inch margins.

For topical area (1) projects that involve environmentally related measurements or data generation, a quality system that complies with the requirements of ANSI/ASQC E4, ''Specifications and Guidelines for Quality Systems for Environmental Data Collection and Environmental Technology Programs'', must be in place as follows:

(a) The activities to be performed or hypothesis to be tested (reference may be made to the specific page and paragraph number in the application where this information may be found); criteria for determining the acceptability of data quality in terms of precision, accuracy, representativeness, completeness, and comparability.

(b) The study design including sample type and location requirements and any statistical analyses that were used to estimate the types and numbers of samples required for physical samples or similar information for studies using survey and interview techniques

(c) The procedures for the handling and custody of samples, including sample identification, preservation, transportation, and storage.

(d) The methods that will be used to analyze samples or data collected, including a description of the sampling and/or analytical instruments required.

(e) The procedures that will be used in the calibration and performance evaluation of the sampling and analytical methods used during the project.

(f) The procedures for data reduction and reporting, including a description of statistical analyses to be used and any computer models to be designed or utilized associated with verification and validation techniques.

(g) The intended use of the data as they relate to the study objectives or hypotheses.

(h) The quantitative and or qualitative procedures that will be used to evaluate the success of the project.

(i) Any plans for peer or other reviews of the study design or analytical methods prior to data collection.

ANSI/ASQC E4, ''Specifications and Guidelines for Quality Systems for Environmental Data Collection and Environmental Technology Programs'' is available for purchase from the American Society for Quality Control, phone 1–800–248–1946, item T55. Only in exceptional circumstances should it be necessary to consult this document.

Proposal Format and Assembly

Clamp the proposal in the upper left-hand corner, but otherwise leave it unbound. Use 1 inch (2.5 cm) margins at the top, bottom, left, and right of each page. Use clear and easily legible type face in standard size of 12 points. Print on one side of the page only. These guidelines for proposal preparation are mandatory. Proposals that deviate from the prescribed format will be returned to the sender without further consideration.

Part II: Further Supplementary Information

(l) Program Authorities for COP and Sea Grant/NOAA–33,U.S.C. 1121 *et. seq*. as amended; for EPA–33, U.S.C 1251 *et. seq.* and 40 CFR parts 30 and 40; for NSF–42, U.S.C. 1861 *et. seq.*; for ONR–10, U.S.C 2358 as amended and 31 U.S.C 6304; and for NASA–14 CFR part 1260.

(2) Catalog of Federal Domestic Assistance Numbers. 11.478 for the Coastal Ocean Program; 11.417 for NOAA/Sea Grant; 66.500 for the Environmental Protection Agency; 47.050 for the National Science Foundation, and 12.300 for the Office of Naval Research.

(3) Program Description. See initial COP General Notice (63 FR 44237, August 18, 1998).

(4) Funding Availability. Publication of this notice does not obligate any agency to any specific award or to any part of the entire amount of funds available. Recipients and subrecipients are subject to all Federal laws and agency policies, regulations, and procedures applicable to Federal financial assistance awards.

A total of $2,150,000 is available for general research on HABs, including Pfiesteria, topical area (1). Small individual studies may typically request $80,000–$100,000 per investigator annually; EPA funding will be limited to $150,000 per year for a maximum of 3 years. Requests to support small group or team projects, including those with field components, are expected to be proportionately higher. In any proposal, support should be strongly justified. All projects should budget funds for investigator participation in an ECOHAB meeting in FY 2000.

Funds available for research under the BTRI, topical area (2), are approximately $400,000 in FY 1999, $400,000 in FY 2000, and $300,000 in FY 2001, pending appropriations. Proposed projects may be 1 to 3 years in length. The annual funding level of a typical grant (one to two investigators) may be up to $100,000, although more comprehensive, multidisciplinary proposals may require higher levels of funding. All proposed BTRI projects should budget funds (as necessary) for investigators to participate in the BTRI Symposium held annually on Long Island, NY.

A total of $550,000 is available for the National Sea Grant College Program research topics, prevention, control, and mitigation for fisheries and aquaculture and economic assessment, topical areas (3) and (4). The annual funding level of a typical grant (one to two investigators) is anticipated to be up to $100,000, although more comprehensive, multidisciplinary proposals may require higher levels of funding. Proposed activities may extend for up to 2 years, but funding to cover both project years will be awarded in FY99; an annual report showing satisfactory progress must be submitted at the end of the first year.

Project activities should include identified milestones for each project year. Support in years after FY99 are contingent upon the availability of funds and the requirements of an individual agency supporting the project.

(5) Matching Requirements. For proposals submitted to the National Sea Grant College Program topical areas on (a) prevention, control, and mitigation of HABs for fisheries and aquaculture and (b) economic assessment (see paragraph (4), matching funds equivalent to 50 percent of Federal funds requested must be provided; for the other two topical research areas (general HABs and Pfiesteria, and BTR research), no matching funds are required.

Proposals must include matching funds equivalent to at least 50 percent of Federal funds requested, or at least 33 percent of the total project cost; for example, a request of $100,000 in Federal funds must be accompanied by at least $50,000 in matching funds.

(6) Type of Funding Instrument. Project grants.

(7) Eligibility Criteria. This opportunity is open to all interested, qualified, non-federal, and Federal researchers. Non-federal researchers should comply with their institutional requirements for proposal submission. Non-NOAA Federal applicants will be required to submit certifications or documentation which clearly show that they can receive funds from the Department of Commerce (DOC) for this research. Foreign researchers must subcontract with U.S. proposers. Non-federal researchers affiliated with NOAA-University Joint Institutes should comply with joint institutional requirements. Non-federal awardees will be funded either through grants to their institutions or through their joint institutes. Proposals deemed acceptable from Federal researchers will be funded through NOAA via a mechanism other than a grant or cooperative agreement. DOC requirements will prevail if there is a conflict between DOC requirements and institutional requirements.

(8) Award Period. Full Proposals can cover a project period from 1 to 5 years as listed here: Funds are available for general HABs and Pfiesteria from FY1999 through FY2004; BTRI from FY1999 through FY2001; and for the National Sea Grant College topics from FY1999 through FY2000 - all dependent on continuing appropriations. Multiyear awards may be funded in total or incrementally on an annual basis; the funding period by participating agencies is at the discretion of the individual agency.

(9) Indirect Costs. If indirect costs are proposed, the following statement applies: The total dollar amount of the indirect costs proposed in an application must not exceed the indirect cost rate negotiated and approved by a cognizant Federal agency prior to the proposed effective date of the award.

(l0) Application Forms and Kit. When applying for financial assistance under this announcement, applicants will be able to obtain a copy of the Federal Register announcement and a standard NOAA Application Kit from the COP home page at the following World Wide Web address: http://www.cop.noaa.gov. If you are unable to access this information, you may also call COP at (301) 713–3338, extension 116, to leave a mailing request.

The Standard Forms 424 (Rev July 1997) Application for Federal Assistance; 424A (Rev July 1997); Budget Information - Non-Construction Programs; and 424B (Rev July 1997) Assurances - Non Construction Programs shall be used in applying for financial assistance. In addition, other forms required include the CD–511, Certifications Regarding Debarment, Suspension and Other Responsibility Matters; Drug-Free Workplace Requirements and Lobbying (submitted with the application package); the CD–512, Certification Regarding Debarment, Suspension, Ineligibility and Voluntary

Exclusion-Lower Tier Covered Transactions and Lobbying (this certification is to remain with the recipient and not to be forwarded to the Grants Officer); and SF-LLL, Disclosure of Lobbying Activities (if applicable).

(11) Project Funding Priorities. Priority consideration will be given to those highly ranked proposals that promote balanced coverage of ECOHAB science goals (pp. 7–8, Research Goals and Topical Areas), provide a programmatically balanced approach to missions of each agency, and avoid duplication of completed or on-going work.

(12) Evaluation Criteria. Consideration for financial assistance will be given for proposals that address the following elements:

(a) Scientific Merit (20 percent): Intrinsic scientific value of the proposed work and the likelihood that it will lead to fundamental advancements and new discoveries, or that it will have substantial impact on progress in that field;

(b) Research Performance Competence (20 percent): The capability of the investigator and collaborators to complete the proposed work as evidenced by past research accomplishments, previous cooperative work, timely communication, and sharing of findings, data, and other research products;

(c) Relevance (20 percent): Likelihood that the research will contribute to the goals of ECOHAB and lead to improved management of coastal resources;

(d) Technical Approach (20 percent): Availability of focused science objectives and a complete but efficient strategy for making measurements and observations in support of the objectives. The scientific approach is sound and logically planned throughout the cycle of the proposed work;

(e) Linkages (10 percent): Connections to existing or planned studies, or demonstrated cooperative arrangements to provide or use data or other research results to achieve the goals of ECOHAB and this specific notice;

(f) Costs (10 percent): Adequacy of the proposed resources to accomplish the proposed work, and the appropriateness of the requested proportion of the total available funds.

(13) Selection Procedures. All proposals will be evaluated and ranked individually in accordance with the assigned weights of the above evaluation criteria by (a) independent peer mail review and by (b) independent peer panel review. Both Federal and non-federal experts in the field may be used in this process. The peer mail reviewers will be several individuals with expertise in the subjects addressed by particular proposals. Each mail reviewer will see only certain individual proposals within his or her area of expertise, and rank them individually on a scale of —1'' to —5'', where scores represent respectively: excellent, very good, good, fair, poor.

The peer panel will consist of 8 to 10 individuals, with each individual having expertise in a separate area, so that the panel as a whole covers a broad range of scientific expertise. The panel will have access to the mail reviews of all proposals, and will use the mail reviews in discussion and evaluation of the entire slate of proposals. Each panel member will rank proposals on the scale of ''1'' to ''5'', as stated in the preceding paragraph.

The program officer(s) will not vote as part of the independent peer panel. Those proposals receiving an average panel rank of Fair or Poor will not be given further consideration and will be notified of non-selection. For the proposals rated by the panel as either Excellent, Very Good, or Good, the program managers will first apply the project funding priorities listed earlier in this document under Part 11, Paragraph (11). (However, EPA will consider only Excellent and Very Good proposals for funding). Second, the program managers will select the proposals to be recommended for funding; third, determine the total duration of funding for each proposal; and fourth, determine the amount of funds available for each proposal. Awards may not necessarily be made to the proposals scored the highest by individual panel and/or mail reviews.

When a decision is made (whether an award or declination), verbatim copies of reviews, excluding the names of the reviewers, and summaries of review panel deliberations, if any, become available to the proposer. No information directly identifying reviewers or other pending or declined proposals will be released.

Dependent on the agency recommending support, investigators may be asked to modify objectives, work plans, or budgets and provide supplemental information required by the agency prior to the award. Subsequent grant administration procedures will be in accordance with the individual policies of the awarding agency. A summary statement of the scientific review by the peer panel will be provided to each applicant.

(14) Other Requirements. See initial COP Notice (63 FR 44237, August 18, 1998), at the COP Internet Site: http://www.cop.noaa.gov.

This notification involves collections of information subject to the requirements of the Paperwork Reduction Act. The standard NOAA forms have been approved by the Office of Management and Budget (OMB) under control numbers 0348–0043, 0348–0044, 0348–0040 and 0348–0046. The EPA-required QA statement was approved in OMB document #2080–0033 (August 14, 1997). The NSF-UNOLS Ship Time Request Form and the NSF Form for Current and Pending Support have been approved by OMB as follows:

The UNOLS form, also titled NSF Form 831 (Rev July 1992) has OMB clearance through September l999 under control number OMB #3145–0058. The form is available via the UNOLS web site at the following web site: http://www.gso.uri.edu/unols/ship/shiptime.html. Paper copies may also be requested from UNOLS, but the electronic version is strongly preferred for ease of information exchange and processing. The NSF guidelines and ship-time form were included in the then-existing e-mail based Internet electronic dissemination system operated by NSF - Science and Technology Information System). The NSF Form l239 (Oct 1998) for Current and Pending Support is cleared as part of the NSF Grant Proposal Guide and Proposal Forms Kit under OMB# 3145–0058 with an expiration date of September l999.

Notwithstanding any other provision of law, no person is required to respond to, nor shall any person be subject to a penalty for failure to comply with a collection of information subject to the requirements of the Paperwork Reduction Act, unless that collection displays a current valid OMB control number.

Dated: March 23, 1999.

Ted I. Lillestolen,

Deputy Assistant Administrator, Ocean Service and Coastal Zone Management.

Dated: March 17, 1999.

Norine E. Noonan,

Assistant Administrator, Office of Research and Development,Environmental Protection Agency.

Dated: March 16, 1999.

G. Michael Purdy,

Director, Division of Ocean Sciences, National Science Foundation.

Dated: March 29, 1999.

Steven E. Ramberg,

Department Head, Ocean, Space and Atmosphere Science and Technology Department, Office of Naval Research.

Dated: March 26, 1999.

Jack A Kaye,

Director, Research Division, Office of Earth Science,NASA Headquarters.

[FR Doc. 99–8616 Filed 4–6–99; 8:45 am]

BILLING CODE 3510–22–F

DEPARTMENT OF COMMERCE

National Oceanic and Atmospheric Administration

[I.D. 033199E]

North Pacific Fishery Management Council; Public Meeting

AGENCY: National Marine Fisheries Service (NMFS), National Oceanic and Atmospheric Administration (NOAA), Commerce.

ACTION: Notice of public meeting.

SUMMARY: A scientific review panel of six scientists will meet in Seattle, WA.

DATES: The meeting will be held on April 26–28, 1999.

ADDRESSES: The meeting will be held at the Alaska Fisheries Science Center, 7600 Sand Point Way NE, Building 9, Auditorium, Seattle, WA 98115.

Council address: North Pacific Fishery Management Council, 605 W. 4th Ave., Suite 306, Anchorage, AK 99501–2252.

FOR FURTHER INFORMATION CONTACT: Clarence Pautzke, telephone: 907–271–2809.

SUPPLEMENTARY INFORMATION: In December 1998, the North Pacific Fishery Management Council (Council) approved emergency measures aimed at further protection for the endangered Steller sea lion. These measures were based on a biological opinion provided by NMFS which concluded that, left unchanged, the pollock fisheries in the Gulf of Alaska and Bering Sea are likely to jeopardize the continued existence of Steller sea lions, and are likely to destroy or adversely modify designated Steller sea lion critical habitat. These emergency measures will need to be replaced with more permanent regulations for the years 2000 and beyond. The Council requested in December that NMFS, in consultation with the Council, the Marine Mammal Commission, and the Alaska Department of Fish and Game, coordinate an independent review of the Biological Opinion and related data.

The panel is being asked to look at the scientific basis for the conclusions of the Biological Opinion and determine whether the principles for establishing reasonable and prudent alternatives are consistent with and supported by the available science.

Although the review session will be open to public attendees, no public comment period is scheduled. A more detailed agenda with estimated times should be available on the on the NPFMC web page (http://www.fakr.noaa.gov/npfmc) by April 9, 1999.

Although other issues not contained in this agenda may come before this panel for discussion, in accordance with the Magnuson-Stevens Fishery Conservation and Management Act, those issues may not be the subject of formal action during this meeting. Action will be restricted to those issues specifically listed in this agenda.

Special Accommodations

This meeting is physically accessible to people with disabilities. Requests for sign language interpretation or other auxiliary aids should be directed to Helen Allen, 907–271–2809, at least 5 working days prior to the meeting date.

Dated: April 1, 1999.

Bruce C. Morehead,

Acting Director, Office of Sustainable Fisheries, National Marine Fisheries Service.

[FR Doc. 99–8612 Filed 4–6–99; 8:45 am]

BILLING CODE 3510–22–F

DEPARTMENT OF COMMERCE

National Oceanic and Atmospheric Administration

[I.D. 040199A]

Endangered Species; Permits

AGENCY: National Marine Fisheries Service (NMFS), National Oceanic and Atmospheric Administration (NOAA), Commerce.

ACTION: Receipt of application for a research permit (1214), and issuance of modification 1 to research permit 1174.

SUMMARY: Notice is hereby given of the following actions regarding permits for takes of endangered and threatened species for the purposes of scientific research and/or enhancement:

NMFS has received a permit application from: Ms. Jane Anne Provancha, of Dynamac Corporation (1214), and NMFS has issued modification 1 to scientific research Permit 1174 to Mr. Harold Brundage III, of Environmental Research and Consulting, Inc, to take listed species.

DATES: Written comments or requests for a public hearing on this request (1214) must be received on or before May 7, 1999.

ADDRESSES: The documents pertaining to this application and permit are available for review by appointment by contacting:

Chief, Endangered Species Division; Office of Protected Resources, F/PR3, NMFS, 1315 East-West Hwy., Silver Spring, MD 20910–3226 (301–713–1401).

FOR FURTHER INFORMATION CONTACT:

For Application 1214, Barb Schroeder, Endangered Species Division, Office of Protected Resources, (301–713–1401).

For Permit 1174, Terri Jordan, Endangered Species Division, Office of Protected Resources, (301–713–1401).

SUPPLEMENTARY INFORMATION:

Authority

Issuance of permits and permit modifications, as required by the ESA, is based on a finding that such permits/modifications: (1) Are applied for in good faith; (2) would not operate to the disadvantage of the listed species which are the subject of the permits; and (3) are consistent with the purposes and policies set forth in section 2 of the ESA. Authority to take listed species is subject to conditions set forth in the permits. Permits and modifications are issued in accordance with and are subject to the Endangered Species Act of 1973 (ESA) (16 U.S.C. 1531–1543) and NMFS regulations governing listed fish and wildlife permits (50 CFR parts 217–227).

Those individuals requesting a hearing on an application listed in this notice should set out the specific reasons why a hearing on that application would be appropriate (see **ADDRESSES**). The holding of such hearing is at the discretion of the Assistant Administrator for Fisheries, NOAA. All statements and opinions

contained in the permit action summaries are those of the applicant and do not necessarily reflect the views of NMFS.

Species Covered in This Notice

The following species and covered in this notice: Green turtle (*Chelonia mydas*), Loggerhead turtle (*Caretta caretta*), Shortnose sturgeon (*Acipenser brevirostrum*).

New Application Received

Jane Provancha (1214) requests authorization to take listed green and loggerhead sea turtles for scientific research in Mosquito Lagoon, FL. The purpose of the research is to continue work that began under NMFS Permit 942, granted in 1995; specifically, to: (1) Continue the comparison of current marine turtle population structure and distribution in Mosquito Lagoon to baseline data collected in 1976–1979, (2) evaluate current seasonal distribution and occurrence of sea turtles, (3) evaluate distribution patterns relative to submarine resource distribution, (4) determine regional ''importance value'' of this lagoon relative to other studied juvenile habitats on the east coast of Florida, and (5) determine the sex ratio of the subadult marine turtles inhabiting Mosquito Lagoon.

Modification Issued

Notice is hereby given that on February 26, 1999, NMFS issued modification 1 to scientific research Permit 1174 to Mr. Harold Brundage III, of Environmental Research and Consulting, Inc. The applicant possesses a 5-year permit to sample for and collect shortnose sturgeon in the Delaware River and Estuary system and in the lower Susquehanna River/Chesapeake Bay Complex. This sampling program is under contract to the NMFS Northeast Region, Protected Resources Division. The objectives of the study are to collect data on current distribution, abundance, length structure and movements of shortnose sturgeon in the Delaware River Estuary and in the lower Susquehanna River and Chesapeake Bay. Modification 1 increases the authorized annual take of shortnose sturgeon in the Delaware River to generate a statistically valid population estimate, due to evidence that the population of shortnose sturgeon in the Delaware River may be substantially higher than previously thought.

Dated: April 1, 1999.

Kevin Collins,

Chief, Endangered Species Division, Office of Protected Resources, National Marine Fisheries Service.

[FR Doc. 99–8614 Filed 4–6–99; 8:45 am]

BILLING CODE 3510–22–F

DEPARTMENT OF DEFENSE

Office of the Secretary

[Transmittal No. 99–11]

36(b)(1) Arms Sales Notification

AGENCY: Department of Defense, Defense Security Cooperation Agency.

ACTION: Notice.

SUMMARY: The Department of Defense is publishing the unclassified text of a section 36(b)(1) arms sales notification. This is published to fulfill the requirements of section 155 of Pub. L. 104–164 dated 21 July 1996.

FOR FURTHER INFORMATION CONTACT: Ms. J. Hurd, DSCA/COMPT/RM, (793) 604–6575.

The following is a copy of a letter to the Speaker of the House of Representatives, Transmittal 99–11, with attached transmittal and policy justification.

Dated: April 1, 1999.

Patricia L. Toppings,

Alternate OSD Federal Register Liaison Officer, Department of Defense.

BILLING CODE 5001–10–M

DEFENSE SECURITY COOPERATION AGENCY

WASHINGTON, DC 20301-2800

26 MAR 1999
In reply refer to:
I-99/03075

Honorable J. Dennis Hastert
Speaker of the House of
Representatives
Washington, D.C. 20515-6501

Dear Mr. Speaker:

Pursuant to the reporting requirements of Section 36(b)(1) of the Arms Export Control Act, we are forwarding herewith Transmittal No. 99-11, concerning the Department of the Air Force's proposed Letter(s) of Offer and Acceptance (LOA) to Korea for defense articles and services estimated to cost $350 million. Soon after this letter is delivered to your office, we plan to notify the news media.

Sincerely,

A.R. KELTZ
ACTING DIRECTOR

Attachments

Same ltr to: House Committee on International Relations
Senate Committee on Appropriations
Senate Committee on Foreign Relations
House Committee on National Security
Senate Committee on Armed Services
House Committee on Appropriations

Transmittal No. 99-11

Notice of Proposed Issuance of Letter of Offer
Pursuant to Section 36(b)(1)
of the Arms Export Control Act

(i) **Prospective Purchaser**: Korea

(ii) **Total Estimated Value**:

Major Defense Equipment*	$ 0 million
Other	$ 350 million
TOTAL	$ 350 million

(iii) **Description of Articles or Services Offered**: A Cooperative Logistics Supply Support Agreement (CLSSA) requisition case (FMSO II) for the support of F-4D/E, RF-4C, F-5A/B/E/F, RF-5A, A/T-37, T-38, F-16C/D, and C-130H aircraft; AN/FPS-117 and AN/FRN-45 radar systems; and AIM-7, AIM-9 and AIM-120 missile components. These items are of U.S. origin and are being operated by the Republic of Korea.

(iv) **Military Department**: Air Force (KCI and KCJ)

(v) **Sales Commission, Fee, etc., Paid, Offered, or Agreed to be Paid**: None

(vi) **Sensitivity of Technology Contained in the Defense Article or Defense Services Proposed to be Sold**: None

(vii) **Date Report Delivered to Congress**: 26 MAR 1999

* as defined in Section 47(6) of the Arms Export Control Act.

POLICY JUSTIFICATION

Republic of Korea - Cooperative Logistics Supply Support Arrangement

The Republic of Korea has requested a possible sale of spare parts under a Cooperative Logistics Supply Support Agreement (CLSSA) requisition case (FMSO II) for the support of F-4D/E, RF-4C, F-5A/B/E/F, RF-5A, A/T-37, T-38, F-16C/D, and C-130H aircraft; AN/FPS-117 and AN/FRN-45 radar systems; and AIM-7, AIM-9 and AIM-120 missile components. These items are of U.S. origin and are being operated by the Republic of Korea. The estimated cost is $350 million.

This proposed sale will contribute to the foreign policy and national security of the United States by helping to improve the security of a friendly country which has been and continues to be an important force for political stability and economic progress in Northeast Asia.

The Republic of Korea needs these additional spare parts to maintain the aircraft, radar, and missile systems previously procured from the United States in a mission capable status.

The proposed sale of this equipment and support will not affect the basic military balance in the region.

Procurement of these items of support will be from the many contractors providing similar items to the U.S. armed forces. There are no offset agreements proposed to be entered into in connection with this potential sale.

Implementation of this proposed sale will not require the assignment of any additional U.S. Government personnel or contractor representatives to the Republic of Korea.

There will be no adverse impact on U.S. defense readiness as a result of this proposed sale.

[FR Doc. 99–8505 Filed 4–6–99; 8:45 am]
BILLING CODE 5001–10–C

DEPARTMENT OF DEFENSE

Office of the Secretary

[Transmittal No. 99–12]

36(b)(1) Arms Sales Notification

AGENCY: Department of Defense, Defense Security Cooperation Agency.

ACTION: Notice.

SUMMARY: The Department of Defense is publishing the unclassified text of a section 36(b)(1) arms sales notification. This is published to fulfill the requirements of section 155 of Pub. L. 104–164 dated 21 July 1996.

FOR FURTHER INFORMATION CONTACT: Ms. J. Hurd, DSCA/COMPT/RM, (703) 604–6575.

The following is a copy of a letter to the Speaker of the House of Representatives, Transmittal 99–12, with attached transmittal and policy justification.

Dated: April 1, 1999.

Patricia L. Toppings,

Alternate OSD Federal Register Liaison Officer, Department of Defense.

BILLING CODE 5001–10–M

DEFENSE SECURITY COOPERATION AGENCY

WASHINGTON, DC 20301-2800

26 MAR 1999
In reply refer to:
I-99/03077

Honorable J. Dennis Hastert
Speaker of the House of
Representatives
Washington, D.C. 20515-6501

Dear Mr. Speaker:

Pursuant to the reporting requirements of Section 36(b)(1) of the Arms Export Control Act, we are forwarding herewith Transmittal No. 99-12 and under separate cover the classified annex thereto. This Transmittal concerns the Department of the Air Force's proposed Letter(s) of Offer and Acceptance (LOA) to Israel for defense articles and services estimated to cost $2.0 billion. Soon after this letter is delivered to your office, we plan to notify the news media of the unclassified portion of this Transmittal.

Sincerely,

A.R. KELTZ
ACTING DIRECTOR

Attachments

Separate Cover:
Classified Annex

Same ltr to: House Committee on International Relations
Senate Committee on Appropriations
Senate Committee on Foreign Relations
House Committee on National Security
Senate Committee on Armed Services
House Committee on Appropriations

Transmittal No. 99-12

Notice of Proposed Issuance of Letter of Offer
Pursuant to Section 36(b)(1)
of the Arms Export Control Act

(i) **Prospective Purchaser: Israel**

(ii) **Total Estimated Value:**

Major Defense Equipment*	$ 1.5 billion
Other	$ .5 billion
TOTAL	$ 2.0 billion

(iii) **Description of Articles or Services Offered: Fifty F-16C/D Block 50/52 aircraft; 50 AN/APG-68(V)X radar; and 30 each LANTIRN navigation and targeting pods. All aircraft will be configured with either the F100-PW-229 or F110-GE-129 engines by direct commercial sale; Night Vision Goggle compatible cockpits; conformal fuel tanks; and the capability to employ the AIM-120, AIM-9, and a wide variety of air-to-surface munitions. Associated support equipment, software development/integration, spares and repair parts, flight test instrumentation, publications and technical documentation, personnel training and training equipment, U.S. Government and contractor technical and logistics personnel services, and other related requirements to ensure full program supportability will also be provided.**

(iv) **Military Department: Air Force (SPF, Amendment 1)**

(v) **Sales Commission, Fee, etc., Paid, Offered, or Agreed to be Paid: None**

(vi) **Sensitivity of Technology Contained in the Defense Article or Defense Services Proposed to be Sold: See Annex under separate cover**

(vii) **Date Report Delivered to Congress: 26 MAR 1999**

*** as defined in Section 47(6) of the Arms Export Control Act.**

POLICY JUSTIFICATION

Israel - F-16C/D Aircraft

The Government of Israel has requested a possible sale of 50 F-16C/D Block 50/52 aircraft; 50 AN/APG-68(V)X radar; and 30 each LANTIRN navigation and targeting pods. All aircraft will be configured with either the F100-PW-229 or F110-GE-129 engines by direct commercial sale; Night Vision Goggle compatible cockpits; conformal fuel tanks; and the capability to employ the AIM-120, AIM-9, and a wide variety of air-to-surface munitions. Associated support equipment, software development/integration, spares and repair parts, flight test instrumentation, publications and technical documentation, personnel training and training equipment, U.S. Government and contractor technical and logistics personnel services, and other related requirements to ensure full program supportability will also be provided. The estimated cost is $2.0 billion.

This proposed sale will contribute to the foreign policy and national security of the United States by helping to improve the security of a friendly country which has been and continues to be an important force for political stability and economic progress in the Middle East.

Israel needs these aircraft to augment its present operational inventory and to enhance its air-to-air and air-to-ground self defense capability. The F-16 enhances Israel's ability to defend itself and supports U.S. regional objectives for Israel's national security and maintenance of Israel's qualitative edge. Israel, which already has F-16 aircraft in its inventory, will have no difficulty absorbing these additional aircraft.

The proposed sale of this equipment and support will not affect the basic military balance in the region.

The prime contractor will be Lockheed Martin Corporation, Orlando, Florida. Under this sale, the contractor will incur offset obligations under an existing industrial cooperation agreement.

Implementation of this proposed sale will not require the assignment of any additional U.S. Government personnel to Israel. A number of U.S. contractor representatives, to be determined during program implementation, will be required in Israel to conduct Contractor Engineering Technical Services (CETS) for a three-year period after aircraft delivery.

There will be no adverse impact on U.S. defense readiness as a result of this proposed sale.

[FR Doc. 99–8506 Filed 4–6–99; 8:45 am]
BILLING CODE 5001–10–C

DEPARTMENT OF DEFENSE

Department of the Air Force

HQ USAF Scientific Advisory Board Meeting

The Spectrum Management Study will meet at Hughes Space & Comm Company, Raytheon Systems Company, and Los Angeles Air Force Base, CA on April 28–29, 1999 from 8:00 a.m. to 5:00 p.m.

The purpose of the meeting is to gather information and receive briefings for the 1999 Quick Look Study.

The meeting will be closed to the public in accordance with Section 552b(c) of Title 5, United States Code, specifically subparagraphs (1) and (4) thereof.

For further information, contact the HQ USAF Scientific Advisory Board Secretariat at (703) 697–8404.

Carolyn A. Lunsford,

Air Force Federal Register Liaison Officer.

[FR Doc. 99–8542 Filed 4–6–99; 8:45 am]

BILLING CODE 5001–05–P

DEPARTMENT OF DEFENSE

Department of the Air Force

HQ USAF Scientific Advisory Board Meeting

The Spectrum Management Study in support of the HQ USAF Scientific Advisory Board will meet in Rosslyn, VA on May 26–28, 1999 from 8:00 a.m. to 5:00 p.m.

The purpose of the meeting is to gather information and receive briefings for the Study.

The meeting will be closed to the public in accordance with Section 552b (c) of Title 5, United States Code, specifically subparagraphs (1) and (4) thereof.

For further information, contact the HQ USAF Scientific Advisory Board Secretariat at (703) 697–8404.

Carolyn A. Lunsford,

Air Force Federal Register Liaison Officer.

[FR Doc. 99–8543 Filed 4–6–99; 8:45 am]

BILLING CODE 5001–05–P

DEPARTMENT OF DEFENSE

Department of the Air Force

Notice of Availability of Federally Owned Inventions

Pursuant to the provisions of Part 404 of Title 37, Code of Federal Regulations, which implements Pub. L. 96–517, the Department of the Air Force announces the availability of certain Air Force owned inventions. The following list of patent applications and patents are available for Nonexclusive or Exclusive Licensing from the Air Force Research Laboratory (AFRL/DE or /VS) at Kirtland AFB. Additional information concerning the inventions is available upon request.

All communications concerning this Notice should be sent to Mr. Kenneth Callahan, Patent Attorney, 377 ABW/JAN, 2251 Maxwell SE, Kirtland AFB, NM 87117, telephone no. (505) 846–1542, e-mail: callahke@plk.af.mil, or fax to (505) 846–0279.

AIR FORCE RESEARCH LABORATORY PATENTS AVAILABLE FOR LICENSING AT KIRTLAND AFB, NM

Patent Appl./No.	Title of invention
08/903,194	Bandwidth Enhancement and Broadband Noise Reduction in Injection-Locked Semiconductor Lasers.
08/910,058	Magnetic Voltage-Pulser.
08/910,538	Compact Intense Radiation System.
08/978,658	High-Efficiency Multiple-Junction Solar Cells.
08/984,309	Cryogenic Pupil Stop for Dual-Band Infrared Focal Plane Arrays.
09/078,893	Multiple Wavelength Heterodyne Array Interferometric Surface Profilometer.
09/092,608	Liquid Crystal Active Optics Correction for Large Space-Based Optical Systems.
09/098,773	Columnar Focal Lens.
09/110,520	Regulated Capacitor Charging Circuit Using a High Reactance Transformer.
09/150,636	HAN TEAN Mixing Gas Generator Propellant Tank Pressurizer for Launch Vehicles and Spacecraft.
09/169,494	Post Process Deposition Shielding for Microelectromechanical Systems.
09/169,495	Post Process Metallization Interconnects for Microelectromechanical Systems (MEMS).
09/178,876	Advanced Instrument Controller.
09/231,149	Active Edge Controlled Optical Quality Membrane Mirror.
09/237,140	Flexureless Multi-Stable Micromirrors for Optical Switching.
09/252,379	Coupled Helmholtz Resonators for Broadband Acoustic Attenuation.
5,835,545	Compact Intense Radiation System.
5,808,226	Grenade Shell Laser System.
5,774,490	Diode-Pumped Tm: YAG/HBr Four Micron Laser System.
5,773,787	Plasma Gun Voltage Generator.
5,760,496	Inverse-Pinch Voltage Pulse Generator.
5,748,657	High Efficiency Constant Current Laser Drivers.
5,742,045	Apparatus Using Diode Laser Logic to Form a Configurable Optical Gate System.
5,734,303	Microwave Waveguide Mode Converter Having a Bevel Output End.
5,727,016	Spatially Coherent Diode Laser With Lenslike Media and Feedback From Straight-Toothed Gratings.

AIR FORCE RESEARCH LABORATORY PATENTS AVAILABLE FOR LICENSING AT KIRTLAND AFB, NM—Continued

Patent Appl./No.	Title of invention
5,705,959	High Efficiency Low Distortion Amplification.
5,696,786	Solid-State Laser System.
5,694,602	Weighted System and Method for Spatial Allocation of a Parallel Load.
5,689,958	High Efficiency Thermal Electric Cooler Driver.
5,675,604	Portable Pumped Laser System.
5,658,488	Regeneration of BHP in a Plant Process.
5,656,873	Transmission Line Charging.
5,646,764	Optical Beam Scanner With Rotating Transmissive Optics.
5,629,802	Spatially Multiplexed Optical Signal Processor.
5,604,642	Laser Welding of Light-Weight Honeycomb Mirrors.
5,604,431	Integrated Grid Particle Impact Detector.
5,602,387	Method of Protecting an RF Receiver in a Hostile Electromagnetic Environment.
5,567,995	Multi-Winding Spiral Generator.
5,557,699	NLO Waveguide and Switch and Method.
5,553,629	Portable Medical Laser Pack System.
5,535,029	Spatial Light Modulator Having Amplitude Coupled With Binary Phase Mode.
5,504,578	Temporal Fringe Pattern Analysis System of a Laser Gain Media.
5,500,865	Phased Cascading of Multiple Nonlinear Optical Elements for Frequency Conversion.
5,458,043	Battery Charging Capacitors Electromagnetic Launcher.
5,457,685	Multi-Speaker Conferencing Over Narrowband Channels.
5,444,308	Nanosecond Transmission Line Charging Apparatus.
5,425,044	Compact, Burst Mode, Pulsed, High Energy, Blowdown Flow Photolytic Atomic Iodine Laser.
5,422,047	Carbonaceous Fuel Particles.
5,410,558	Variable Short Period Electron Beam Wiggler for Free Electron Lasers.
5,406,072	Method for Microbeam Ion Radiation Testing of Photonic Devices.

Carolyn A. Lunsford,

Air Force Federal Register Liaison Officer.

[FR Doc. 99–8541 Filed 4–6–99; 8:45 am]

BILLING CODE 5001–05–P

DEPARTMENT OF DEFENSE

Department of the Army

Privacy Act of 1974; System of Records

AGENCY: Department of the Army, DoD.

ACTION: Notice to amend system of records.

SUMMARY: The Department of the Army is amending a system of records notice in its existing inventory of record systems subject to the Privacy Act of 1974, (5 U.S.C. 552a), as amended.

DATES: This proposed action will be effective without further notice on May 7, 1999, unless comments are received which result in a contrary determination.

ADDRESSES: Privacy Act Officer, Records Management Program Division, Army Records Management and Declassification Agency, ATTN: TAPC-PDD-RP, Stop C55, Ft. Belvoir, VA 22060–5576.

FOR FURTHER INFORMATION CONTACT: Ms. Janice Thornton at (703) 806–4390 or DSN 656–4390.

SUPPLEMENTARY INFORMATION: The Department of the Army systems of records notices subject to the Privacy Act of 1974, (5 U.S.C. 552a), as amended, have been published in the **Federal Register** and are available from the address above.

The specific changes to the record system being amended are set forth below followed by the notice, as amended, published in its entirety. The proposed amendments are not within the purview of subsection (r) of the Privacy Act of 1974, (5 U.S.C. 552a), as amended, which requires the submission of a new or altered system report.

Dated: March 31, 1999.

L.M. Bynum,

Alternate OSD Federal Register Liaison Officer, Department of Defense.

A0608 TAPC

SYSTEM NAME:

Personal Affairs Files *(February 22, 1993, 58 FR 10002).*

CHANGES:

* * * * *

STORAGE:

Delete the last word 'cards' from entry.

* * * * *

SAFEGUARDS:

Add to the end of the entry 'Records are kept in secure office areas.'

* * * * *

SYSTEM MANAGER(S) AND ADDRESS:

Delete entry and replace with 'Commander, U.S. Total Army Personnel Command, ATTN: TAPC-PDO-IP, 200 Stovall Street, Alexandria, VA 22332–0474.'

* * * * *

A0608 TAPC

SYSTEM NAME:

Personal Affairs Files.

SYSTEM LOCATION:

Decentralized to major commands, installations, and activities. Official mailing addresses are published as an appendix to the Army's compilation of record systems notices.

CATEGORIES OF INDIVIDUALS COVERED BY THE SYSTEM:

Army officers, warrant officers, and enlisted personnel on active duty.

CATEGORIES OF RECORDS IN THE SYSTEM:

Third party inquiries pertaining to such matters as dependent assistance, indebtedness, non-support, paternity claims, and marriage in overseas areas.

AUTHORITY FOR MAINTENANCE OF THE SYSTEM:

10 U.S.C. 3013, Secretary of the Army and 5 U.S.C. 301, Departmental Regulations.

PURPOSE(S):

To review and answer inquiries concerning personal affairs of service members; e.g., dependent assistance, indebtedness, non-support, paternity claims, marriage in overseas areas, and similar matters that originate from third parties.

ROUTINE USES OF RECORDS MAINTAINED IN THE SYSTEM, INCLUDING CATEGORIES OF USERS AND THE PURPOSES OF SUCH USES:

In addition to those disclosures generally permitted under 5 U.S.C. 552a(b) of the Privacy Act, these records or information contained therein may specifically be disclosed outside the DoD as a routine use pursuant to 5 U.S.C. 552a(b)(3) as follows:

The 'Blanket Routine Uses' set forth at the beginning of the Army's compilation of systems of records notices also apply to this system.

POLICIES AND PRACTICES FOR STORING, RETRIEVING, ACCESSING, RETAINING, AND DISPOSING OF RECORDS IN THE SYSTEM:

STORAGE:

Paper records in file folders.

RETRIEVABIITY:

By service member's surname.

SAFEGUARDS:

Records are available only to designated persons having official need therefor in the performance of their duties. Records are kept in secure office areas.

RETENTION AND DISPOSAL:

Retained for 2 years.

SYSTEM MANAGER(S) AND ADDRESS:

Commander, U.S. Total Army Personnel Command, ATTN: TAPC-PDO-IP, 200 Stovall Street, Alexandria, VA 22332–0474.

NOTIFICATION PROCEDURE:

Individuals seeking to determine if information about themselves is contained in this record system should address written inquiries to the command/installation/activity where they believe inquiry was sent.

Individual should provide the full name, current address and telephone number, and sufficient details to permit locating the record.

RECORD ACCESS PROCEDURES:

Individuals seeking access to records about themselves contained in this record system should address written inquiries to the command/installation/activity where they believe inquiry was sent.

Individual should provide the full name, current address and telephone number, and sufficient details to permit locating the record.

CONTESTING RECORD PROCEDURES:

The Army's rules for accessing records, and for contesting contents and appealing initial agency determinations are contained in Army Regulation 340–21; 32 CFR part 505; or may be obtained from the system manager.

RECORD SOURCE CATEGORIES:

From third parties, official Army records.

EXEMPTIONS CLAIMED FOR THE SYSTEM:

None.

[FR Doc. 99–8507 Filed 4–6–99; 8:45 am]

BILLING CODE 5001–10–F

DEPARTMENT OF ENERGY

Record of Decision For the Advanced Mixed Waste Treatment Project at the Idaho National Engineering and Environmental Laboratory

AGENCY: U. S. Department of Energy (DOE)

ACTION: Record of decision.

SUMMARY: The Department has decided to implement the Preferred Alternative identified in the Advanced Mixed Waste Treatment Project Final Environmental Impact Statement (AMWTP FEIS) (DOE/EIS–0290), dated January 1999. The decision to proceed with the construction and operation of the Advanced Mixed Waste Treatment Project (AMWTP) facility allows the U.S. Department of Energy (DOE) to treat and prepare for shipment and disposal of 65,000 cubic meters of DOE transuranic (TRU) waste, alpha-contaminated low-level mixed waste (alpha LLMW), and low-level mixed wastes (LLMW) currently stored at Idaho National Engineering and Environmental Laboratory (INEEL). Further, DOE could treat at the AMWTP up to 120,000 cubic meters of additional waste from the INEEL or other DOE sites, for a total of 185,000 cubic meters. The AMWTP facility will treat waste to meet the Waste Isolation Pilot Plant (WIPP) Waste Acceptance Criteria (WAC) and applicable requirements of the Toxic Substances Control Act (TSCA) and the Resource Conservation and Recovery Act (RCRA) Land Disposal Restrictions (LDR).

In making its decision, DOE considered several factors including the environmental analyses reported in the AMWTP FEIS, estimated costs of the alternatives reported in Advanced Mixed Waste Treatment Project Environmental Impact Statement Alternatives Cost Study, regulatory implications of the alternatives, mission, national policy, and public comments on the AMWTP Draft EIS. This Record of Decision documents the Department's decision to implement the Preferred Alternative, which provides for the greatest long-term protection of the environment with small short-term environmental impacts and health risks.

FOR FURTHER INFORMATION CONTACT: For further information on the AMWTP, the contract with BNFL Inc., or the EIS, please write or call: John Medema, AMWTP EIS Document Manager, U.S. Department of Energy, Idaho Operations Office, 850 Energy Drive, MS–1117, Idaho Falls, ID 83401, Telephone: (208) 526–1407.

For general information on DOE's National Environmental Policy Act (NEPA) process, please contact: Carol M. Borgstrom, Director, Office of NEPA Policy and Assistance (EH–42), U.S. Department of Energy, 1000 Independence Avenue, S.W., Washington, D.C. 20585, Telephone: (202) 586–4600 or leave a message at (800) 472–2756.

SUPPLEMENTARY INFORMATION:

Background

Since the mid-1940s, DOE and its predecessor agencies have generated TRU waste during the course of nuclear weapons production, nuclear material processing, and research and development activities. DOE currently defines TRU waste as waste containing alpha-emitting radionuclides with an atomic number greater than 92 and half-

lives greater than 20 years, at concentrations greater than 100 nanocuries per gram of waste. Prior to 1982, DOE considered waste containing alpha-emitting radionuclides at concentrations greater than 10 nanocuries per gram of waste to be TRU waste. Waste at INEEL that has concentrations greater than 10 nanocuries per gram but less than 100 nanocuries per gram is considered to be alpha-contaminated low-level waste, which is being managed as TRU waste. DOE has stored TRU waste and alpha-contaminated low-level waste at the INEEL since the early 1970s. Most of this waste was generated at DOE's Rocky Flats Plant near Denver, Colorado. The waste was shipped to the INEEL in drums and boxes that were retrievably stored on an asphalt pad at INEEL's Radioactive Waste Management Complex (RWMC) and covered with tarps, plywood, and soil to form an earthen-covered berm.

Approximately 95 percent of this radioactive waste is classified as mixed waste because it contains chemically hazardous waste and, therefore, is regulated under RCRA. Some of the wastes also contain polychlorinated biphenyls (PCBs), which are regulated under TSCA. These wastes (radioactive, RCRA, and TSCA wastes) are mixed together within their storage containers. DOE needs to place these wastes in a configuration that will allow for their disposal at the WIPP near Carlsbad, New Mexico, or another appropriate facility, in a manner consistent with state and federal law and in compliance with the schedule contained in the Settlement Agreement/Consent Order.

On October 17, 1995, the State of Idaho, the Department of the Navy, and DOE settled the case of the *Public Service Co. of Colorado* v. *Batt*, CV 91–0035–S–EJL (D. Idaho) (Lead Case). Certain conditions of the Settlement Agreement/Consent Order obligated DOE to:

—Commence procurement of a treatment facility at the INEEL for the treatment of TRU waste, alpha LLMW, and LLMW, and

—Execute a procurement contract for a treatment facility by June 1, 1997, complete construction of the facility by December 31, 2002, and commence operation by March 31, 2003.

A procurement contract for treatment services was awarded to BNFL Inc. on December 20, 1996. Construction and operation of the treatment facility is contingent upon DOE's completion of an EIS and issuance of a record of decision. If DOE decides not to move forward with construction and operation of the facility, the contract will be terminated.

Also, DOE negotiated the INEEL Site Treatment Plan (STP) with the State of Idaho to meet the requirements of the Federal Facility Compliance Act (FFCA). The STP includes a schedule for constructing a treatment facility(ies) for TRU waste and alpha LLMW that is consistent with the milestones in the Settlement Agreement/Consent Order.

Alternatives Considered

DOE analyzed four alternatives in the EIS, including the No Action Alternative, the Preferred Alternative, the Non-Thermal Treatment Alternative, and the Treatment and Storage Alternative. Under all four alternatives, the Department would continue with preparations at existing INEEL facilities to ship 3,100 cubic meters of TRU waste out of Idaho under the Settlement Agreement/Consent Order. The alternatives are summarized below.

Preferred Alternative

The Preferred Alternative provides for construction and operation of the AMWTP facility in accordance with DOE's contract with BNFL Inc. The AMWTP facility will treat waste to WIPP WAC, TSCA, and RCRA LDR requirements and standards, as applicable. The waste treatment processes analyzed in the Preferred Alternative are supercompaction, macroencapsulation, incineration, and microencapsulation (see Figure 1). The facility will have sufficient operating capacity to treat approximately 6,500 cubic meters of waste per year. This would accommodate the treatment of 65,000 cubic meters of INEEL waste by 2015 as required by the Settlement Agreement/Consent Order, and up to 120,000 cubic meters of additional waste from the INEEL or other DOE sites by 2033. Treatment of 65,000 cubic meters of INEEL waste would result in approximately 30,000 cubic meters (containerized volume) of waste for offsite disposal. This alternative will allow DOE to satisfy negotiated agreements and commitments and meet regulatory requirements under RCRA and TSCA.

The Preferred Alternative is consistent with DOE's planning objectives and decisions as documented in the 1995 Record of Decision for the Department of Energy Programmatic Spent Nuclear Fuel Management and Idaho National Engineering Laboratory Environmental Restoration and Waste Management Programs (60 **Federal Register** 28680, June 1, 1995). Implementation of the Preferred Alternative is also consistent with the Record of Decision for the Treatment and Storage of Transuranic Waste Pursuant to the Waste Management Programmatic Environmental Impact Statement (63 **Federal Register** 3629, January 23, 1998). In that Record of Decision, the Department decided to ''develop and operate mobile and fixed facilities to characterize and prepare TRU waste for disposal at WIPP'' and that ''each of the DOE's sites that has, or will generate, TRU waste will, as needed, prepare and store its TRU waste on site . . . prior to disposal.''

BILLING CODE 6450–01–P

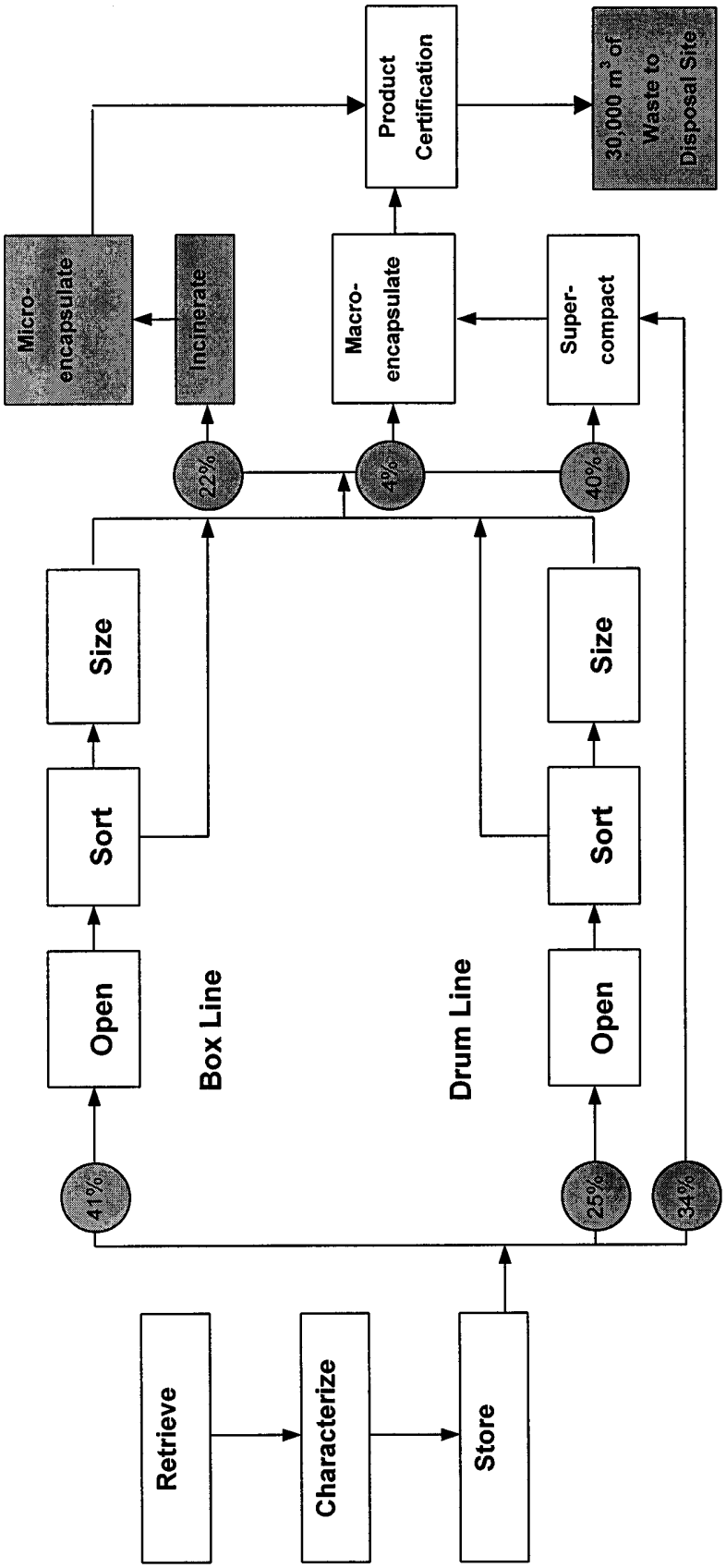

FIGURE 1. Preferred Alternative process flow-65,000[1] cubic meters of input volume.

[1]Process flow would be the same for treatment of up to 120,000 cubic meters of additional waste, if needed.

BILLING CODE 6450–01–C

No Action Alternative

Under this alternative, ongoing TRU waste, alpha LLMW, and LLMW management operations and projects would continue and existing facilities at the INEEL RWMC would remain in use. Waste would be retrieved from the earthen-covered berm, and placed in RCRA compliant storage facilities. These actions have been analyzed and would proceed as described in the Environmental Assessment for the Retrieval and Re-storage of Transuranic Storage Area Waste at the Idaho National Engineering Laboratory (DOE/EA–0692). Waste would be shipped to WIPP or another appropriate facility, but only as could be supported by existing INEEL facilities. Waste that could not meet the appropriate receiving facility WAC would remain in storage in the RCRA storage modules at the RWMC indefinitely.

The No Action Alternative was not selected because it would not provide appropriate long-term environmental protection (i.e., it would not destroy any of the hazardous organic components of the waste and would not permanently isolate all the wastes from the environment). The No Action Alternative would not comply with the Settlement Agreement/Consent Order, RCRA, TSCA, or with the INEEL STP, and is not consistent with long-range DOE planning and decisions DOE has made in previous Records of Decision. Specifically, in the 1995 Record of Decision Department of Energy Programmatic Spent Nuclear Fuel Management and Idaho National Engineering Laboratory Environmental Restoration and Waste Management Programs DOE decided: ''The INEL will construct treatment facilities necessary to comply with the Federal Facility Compliance Act. Treatment of transuranic waste at a minimum will be for the purpose of meeting waste acceptance criteria for disposal at Waste Isolation Pilot Plant and will occur on a schedule to be negotiated with the State of Idaho.'' Additionally, in the 1995 Record of Decision, the Department decided to make future decisions regarding planned waste treatment projects (i.e., Private Sector Alpha-Contaminated Mixed Low-Level Waste Treatment and Idaho Waste Processing Facility) at the INEEL pending further project definition, funding priorities, or appropriate review under NEPA. The AMWTP EIS tiers from the Department of Energy Programmatic Spent Nuclear Fuel Management and Idaho National Engineering Laboratory Environmental Restoration and Waste Management Programs Final Environmental Impact Statement (DOE/EIS–0203–F) and provides both site-specific environmental impact analysis and the required NEPA review.

Non-Thermal Treatment Alternative

Under this alternative, the AMWTP facility would be constructed without the capability to incinerate waste or microencapsulate incinerator ash. Only supercompaction and macroencapsulation would be used to treat wastes. Wastes requiring thermal treatment to meet disposal criteria (e.g., PCBs) would be repackaged and stored until a treatment option is developed or identified and evaluated under NEPA. The AMWTP facility construction schedule would be the same as for the Preferred Alternative. All waste that could be treated to meet WIPP WAC without incineration would be prepared for shipment to WIPP. Operation of the facility would continue until 2015, when DOE expects the need for it to end. Under this alternative, the 65,000 cubic meters of INEEL waste would be non-thermally treated. Approximately 23,000 to 29,000 cubic meters of waste would be shipped from the INEEL for disposal and approximately 8,000 to 14,000 cubic meters of containerized waste would remain in storage indefinitely at the RWMC.

DOE considers this alternative to be less desirable than the Preferred Alternative because it would not result in destruction of any of the hazardous organic components of the waste or the PCBs, and some waste would be stored indefinitely at INEEL. The Non-Thermal Treatment Alternative would not allow full compliance with the Settlement Agreement/Consent Order, RCRA, or with the INEEL STP. This alternative would not be consistent with DOE long-range plans or with decisions made in the 1995 Record of Decision regarding the construction at INEEL of treatment facilities necessary to comply with the FFCA STP.

Treatment and Storage Alternative

Under this alternative, the AMWTP construction and operation, including the treatment processes implemented, would be the same as for the Preferred Alternative. The difference is that the treated waste (approximately 30,000 cubic meters) would be stored at the RWMC rather than shipped offsite for disposal. This alternative was evaluated as a contingency to analyze the long-term environmental impacts of storing the treated waste at the RWMC in the event that WIPP or another appropriate offsite facility is unable to receive or dispose of INEEL treated waste. Waste from other DOE sites could still come to the AMWTP for treatment. In accordance with the INEEL STP, such offsite wastes would be accepted at the AMWTP facility for treatment and treated waste would be returned to the generator.

The Treatment and Storage Alternative is less desirable than the Preferred Alternative because (1) it would not comply with the Settlement Agreement/Consent Order (i.e., waste would not be shipped out of Idaho) and (2) it is not consistent with DOE's long-range plans to dispose of this waste.

Environmentally Preferable Alternative

In identifying the Environmentally Preferable Alternative, DOE considered both near-term and long-term human health and environmental impacts. Certain alternatives would result in smaller near-term potential impacts but continued potential for long-term impacts, while other alternatives would result in larger near-term potential impacts but smaller long-term potential impacts.

The AMWTP EIS analyzed a number of potential environmental impacts, including those to human health, air and water, ecological resources, environmental justice, land use, and site infrastructure under each of the alternatives. The analysis showed little difference in potential impacts among the alternatives analyzed. Nonetheless, all potential impacts identified were considered in DOE's decision, and in the identification of the Environmentally Preferable Alternative.

For the projected 30-year period of AMWTP facility operations analyzed in the EIS, the short-term potential environmental impacts of the action alternatives would be slightly greater than the No Action Alternative. In the long-term, the potential impacts to health and the environment would be the greatest under the No Action Alternative. Over the long-term wastes could be released to the environment if the storage containers degrade. Additionally, it is reasonable to expect that some treatment or preparation for disposal will still be needed at some time in the future, and the risks associated with long-term storage and the loss of institutional control remain.

The Preferred Alternative and the Treatment and Storage Alternative would result in the largest (although small) potential near-term impacts to air quality, public health and worker risk. Both the Preferred Alternative and the Treatment and Storage Alternative would render all the waste suitable for disposal at WIPP or another appropriate facility. The Preferred Alternative

would result in the least potential long-term impacts to the local environment because the treated waste would leave the INEEL.

The Non-Thermal Treatment Alternative would result in smaller near-term potential impacts to air quality than the Preferred Alternative and the Treatment and Storage Alternative, but more than the No Action Alternative. Under the Non-Thermal Treatment Alternative, there would be less potential health risk over the short term, but a portion of the RCRA waste (i.e., hazardous organic wastes) and all of the PCB waste would remain in storage at the INEEL indefinitely. The long-term potential impacts of indefinite storage under the Non-Thermal Treatment Alternative are smaller than the No Action Alternative but larger than the Preferred Alternative. If the wastes were not isolated from the environment in a disposal facility, they could enter the environment and impact public health and the environment via the air or groundwater pathways.

In conclusion, the potential short-term environmental impacts from any of the action alternatives are small. The Preferred Alternative results in the least long-term potential impacts and is the only alternative that meets all regulatory and legal commitments. In addition, the Preferred Alternative is also consistent with DOE's long-range plans to dispose of this waste. DOE therefore believes that the Preferred Alternative is the Environmentally Preferable Alternative.

Mitigation

DOE is committed to operating the INEEL in compliance with all applicable laws, regulations, executive orders, departmental orders, permits and compliance agreements. Volume 1, Section 5.19 of the AMWTP EIS presents an overview of the mitigation measures that will be taken to minimize the risks associated with the construction and operation of the proposed AMWTP facility (e.g., watering of soil for dust control, strong ''Stop Work'' stipulations in the event that cultural resources or human remains are discovered, and runoff control). DOE considers these to be routine mitigation measures that do not require a mitigation action plan to be prepared (see 10 CFR 1021.331(a)).

Decision

DOE selects the Preferred Alternative of the AMWTP EIS (construct and operate an AMWTP facility at the INEEL in accordance with DOE's contract with BNFL Inc). DOE will treat 65,000 cubic meters of INEEL waste for offsite disposal and could treat up to 120,000 cubic meters of additional waste from the INEEL or other DOE sites.

DOE anticipates that construction of the AMWTP facility will begin during the 1999 construction season. Under the Settlement Agreement/Consent Order, construction of the AMWTP facility will be completed by December 31, 2002, and operation of the facility will begin by March 31, 2003.

The AMWTP treatment contract requires 65 percent volume reduction and compliance with RCRA LDR standards, TSCA requirements, and the WIPP WAC, as applicable. The facility and equipment will be capable of processing up to 85,000 cubic meters of waste in the first 13 years of operation. The Preferred Alternative as analyzed in the EIS includes the treatment processes of supercompaction, macroencapsulation, incineration, and microencapsulation. The potential exists that not all of these treatment processes will be used because future changes in disposal requirements might necessitate changes in treatment processes, with resulting modifications to contract specifications. Other changes or substitutions to the proposed processes may occur, provided the performance requirements specified in the contract are met. For example, although vitrification originally was analyzed in the EIS for the treatment of incinerator ash, it is no longer being considered as a treatment process. Any proposed substitution or major change in a treatment process would be evaluated where appropriate under NEPA.

DOE made this decision after considering the following factors associated with the Preferred Alternative:

- public comments on the EIS;
- a small potential for short-term environmental impacts;
- a waste form that will be ready for disposal at WIPP or another appropriate disposal facility;
- if WIPP or another appropriate disposal facility is unable to receive and dispose of INEEL waste, the treated waste will be in a form that would minimize potential impacts to the public and the environment during storage;
- consistency with DOE policy and previous decisions;
- compliance with negotiated agreements and commitments (e.g. Settlement Agreement/Consent Order) and regulatory requirements under RCRA and TSCA;
- smallest long-term potential impacts from continued management of this waste;
- cost effectiveness as shown in the AMWTP EIS Alternatives Cost Study; and
- use of commercially available, proven technologies.

After consideration of all relevant information and data, DOE has decided to implement the Preferred Alternative.

Issued in Washington, D.C. this 22nd day of March 1999.

James M. Owendoff,

Acting Assistant Secretary for Environmental Management.

[FR Doc. 99–8606 Filed 4–6–99; 8:45 am]

BILLING CODE 6450–01–P

DEPARTMENT OF ENERGY

Federal Energy Regulatory Commission

[Docket No. EC99–57–000]

AES Eastern Energy, L.P., AEE 2, L.L.C.; Notice of Filing

April 1, 1999.

Take notice that on March 26, 1999, AES Eastern Energy, L.P. and AEE 2, L.L.C. tendered for filing an application under Section 203 of the Federal Power Act for authorization to further transfer certain jurisdictional facilities associated with the sale of two of six coal-fired plants located in New York State and currently owned by NGE Generation, Inc. The two plants will be transferred to a wholly-owned subsidiary of AES Eastern Energy, L.P., AEE 2, L.L.C., rather than held by it directly, as previously authorized by the Commission.

Any person desiring to be heard or to protest such filing should file a motion to intervene or protest with the Federal Energy Regulatory Commission, 888 First Street, N.E., Washington, D.C. 20426, in accordance with Rules 211 and 214 of the Commission's Rules of Practice and Procedure (18 CFR 385.211 and 385.214). All such motions and protests should be filed on or before April 8, 1999. Protests will be considered by the Commission to determine the appropriate action to be taken, but will not serve to make protestants parties to the proceedings. Any person wishing to become a party must file a motion to intervene. Copies of this filing are on file with the Commission and are available for public inspection. This filing may also be viewed on the Internet at http://

www.ferc.fed.us/online/rims.htm (call 202–208–2222 for assistance).

Linwood A. Watson,

Acting Secretary.

[FR Doc. 99–8520 Filed 4–6–99; 8:45 am]

BILLING CODE 6717–01–M

DEPARTMENT OF ENERGY

Federal Energy Regulatory Commission

[Docket Nos. EC98–40–000; ER98–2770–000; and ER98–2786–000]

American Electric Power Company and Central and South West Corporation; Notice of Informal Settlement Conference

April 1, 1999.

Take Notice that an informal settlement conference will be convened in this proceeding commencing at 9:00 a.m. on Tuesday, April 13, 1999 at the offices of the Federal Energy Regulatory Commission, 888 First Street, N.E., Washington, D.C. 20426, for the purpose of exploring the possible settlement in the above-referenced dockets.

Any party, as defined by 18 CFR 385.102(c), or any participant as defined by 18 CFR 385.102(b), is invited to attend. Persons wishing to become a party must move to intervene and receive intervenor status pursuant to the Commission's regulations (18 CFR 385.214).

For additional information, please contact James A. Pepper at (202) 208–0556, Charles F. Reusch at (202) 208–0401, Edith A. Gilmore at (202) 208–2158, or Gary D. Levenson at (202) 208–1210.

Linwood A. Watson, Jr.,

Acting Secretary.

[FR Doc. 99–8522 Filed 4–6–99; 8:45 am]

BILLING CODE 6717–01–M

DEPARTMENT OF ENERGY

Federal Energy Regulatory Commission

[Docket No. RP95–408–026]

Columbia Gas Transmission Corporation; Notice of Refund Report

April 1, 1999.

Take notice that on March 22, 1999, Columbia Gas Transmission Corporation (Columbia) tendered for filing with the Federal Energy Regulatory Commission its Refund Report made to comply with the November 22, 1996 Settlement in Docket No. RP95–408, *et al.* as approved by the Commission on April 17, 1997.

On February 20, 1999, Columbia made refunds, as billing credits, in the amount of $137,801.69. The credits represent a deferred tax refund based on the sale of certain gathering facilities to Columbia Natural Resources. These refunds were made pursuant to Stipulation II, Article III, Section G(2) of the Settlement.

Any person desiring to protest said filing should file a protest with the Federal Energy Regulatory Commission, 888 First Street, NE, Washington, DC 20426, in accordance with Section 385.211 of the Commission's Rules and Regulations. All such protests must be filed on or before April 8, 1999. Protests will be considered by the Commission in determining the appropriate action to be taken, but will not serve to make protestants parties to the proceedings. Copies of this filing are on file with the Commission and are available for public inspection in the Public Reference Room. This filing may be viewed on the web at http://www.ferc.fed.us/online/rims.htm (call 202–208–2222 for assistance).

Linwood A. Watson, Jr.,

Acting Secretary.

[FR Doc. 99–8525 Filed 4–6–99; 8:45 am]

BILLING CODe 6717–01–M

DEPARTMENT OF ENERGY

Federal Energy Regulatory Commission

[Docket No. RP97–373–016]

Koch Gateway Pipeline Company; Notice of Filing of Refund Report

April 1, 1999.

Take notice that on March 29, 1999, Koch Gateway Pipeline Company (Koch) tendered for filing its Refund Report and supporting narrative in accordance with the Commission's Order issued in Docket No. RP97–373 on August 3, 1998, 84 FERC ¶ 61,142 (1998).

The August 3, 1998 order directed Koch to refund to customers charged a rate in excess of the maximum settlement rates during the period December 1, 1997 through August 31, 1998.

Koch states that copies of the filing have been served upon all reflected customers, state commissions and all parties on the official service list.

Any person desiring to protest said filing should file a protest with the Federal Energy Regulatory Commission, 888 First Street, N.E., Washington, D.C. 20426, in accordance with Section 385.211 of the Commission's Rules and Regulations. All such protests must be filed on or before April 8, 1999. Protests will be considered by the Commission in determining the appropriate action to be taken, but will not serve to make protestants parties to the proceedings. Copies of this filing are on file with the Commission and are available for public inspection in the Public Reference Room. This filing may be viewed on the web at http://www.ferc.fed.us/online/rims.htm (call 202–208–2222 for assistance).

Linwood A. Watson, Jr.,

Acting Secretary.

[FR Doc. 99–8526 Filed 4–6–99; 8:45 am]

BILLING CODE 6717–01–M

DEPARTMENT OF ENERGY

Federal Energy Regulatory Commission

[Docket No. RP98–404–004]

Mississippi River Transmission Corporation; Notice of Compliance Filing

April 1, 1999.

Take notice that on March 29,1999, Mississippi River Transmission Corporation (MRT) tendered for filing as part of its Gas Tariff, Third Revised Volume No. 1, the following revised tariff sheets to become effective March 17, 1999:

2nd Sub Third Rev. Sheet No. 99
3rd Sub Original Sheet No. 99A
3rd Sub Original Sheet No. 99B
3rd Sub Original Sheet No. 99C
3rd Sub Original Sheet No. 99D
3rd Sub Original Sheet No. 99E
Substitute Original Sheet No. 99F
Substitute Original Sheet No. 99G

MRT states that the purpose of this filing is to comply with the Commission's Order Accepting Tariff Sheets, Subject to Conditions, and Denying Rehearing issued on March 16, 1999. These tariff sheets set forth the method MRT will use to allocate firm capacity that become available for subscription on MRT's system.

MRT states that a copy of this filing is being mailed to each of MRT's customers and to the state commissions of Arkansas, Illinois, and Missouri.

Any person desiring to protest this filing should file a protest with the Federal Energy Regulatory Commission, 888 First Street, NE, Washington, DC 20426, in accordance with Section 385.211 of the Commission's Rules and Regulations. All such protests must be filed as provided in Section 154.210 of the Commission's Regulations. Protests will be considered by the Commission in determining the appropriate action to be taken, but will not serve to make

protestants parties to the proceedings. Copies of this filing are on file with the Commission and are available for public inspection in the Public Reference Room. This filing may be viewed on the web at http://www.ferc.fed.us/online/rims.htm (call 202–208–2222 for assistance).

Linwood A. Watson, Jr.,

Acting Secretary.

[FR Doc. 99–8527 Filed 4–6–99; 8:45 am]

BILLING CODE 6717–01–M

DEPARTMENT OF ENERGY

Federal Energy Regulatory Commission

[Docket No. SA99–16–000]

The Montana Power Company; Notice of Petition for Adjustment and Rate Ejection

April 1, 1999.

Take notice that on March 19, 1999, The Montana Power Company (MPC) filed a petition for adjustment and notice of rate election pursuant to Section 284.123(b)(1)(ii) of the Commission's regulations. MPC requests waiver of the rate petition filing required by the Commission's November 3, 1997 order [81 FERC ¶ 61,156 (1997)], and permission to switch from its Commission-approved rate for Section 311 interruptible transportation (IT) service to its city-gate rate of $0.2480 per Dkt for comparable IT service.

MPC is a Hinshaw pipeline organized under the laws of the State of Montana and subject to the jurisdiction of the Montana Public Service Commission. Montana states that is request to use a state-approved rate for interstate IT service is consistent with its current use of a city-gate rate for Section 311 firm transportation and interruptible storage services.

Any person desiring to participate in this rate proceeding must file a motion to intervene or protest with the Federal Energy Regulatory Commission, 888 First Street, NE, Washington, DC 20426, in accordance with Sections 385.214 and 385.211 of the Commission's Rules of Practice and Procedures. All such motions or protests must be filed with the Secretary of the Commission on or before April 15, 1999. Protests will be considered by the Commission in determining the appropriate action to be taken, but will not serve to make Protestants parties to the proceedings. Any person wishing to become a party must file a motion to intervene. Copies of this application are on file with the Commission and are available for public inspection. This filing may be viewed on the web at http://www.ferc.fed.us/online/rims.htm (call 202–208–2222 for assistance).

Linwood A. Watson, Jr.,

Acting Secretary.

[FR Doc. 99–8528 Filed 4–6–99; 8:45 am]

BILLING CODE 6717–01–M

DEPARTMENT OF ENERGY

Federal Energy Regulatory Commission

[Docket No. CP99–276–000]

Northern Natural Gas Company; Notice of Request Under Blanket Authorization

April 1, 1999.

Take notice that on March 29, 1999, Northern Natural Gas Company (Northern), 1111 South 103rd Street, Omaha, Nebraska 68124–1000, filed in Docket No. CP99–276–000 a request pursuant to sections 157.205, 157.212, and 157.216, of the Commission's Regulations under the Natural Gas Act (18 CFR 157.205, 157.212, 157.216) for authorization to upgrade an existing delivery point in Stearns County, Minnesota under Northern's blanket certificate issued in Docket No. CP82–401–000 pursuant to Section 7 of the Natural Gas Act, all as more fully set forth in the request that is on file with the Commission and open to public inspection. This filing may be viewed on the web at http://www.ferc.fed.us/online/rims.htm (call 202–208–2222 for assistance).

Northern states that it proposes to upgrade the delivery point to accommodate natural gas deliveries to Northern States Power—Minnesota (NSP–MN) under currently effective throughput service agreements. Northern states that NSP–MN has requested the upgrade of the existing delivery point to provide increased natural gas service to the St. Cloud #2 town border station to meet 1999 Peak Day 2000 requirements. Northern states that the estimated incremental volumes proposed to be delivered to NSP–MN at the delivery point is 807 MMBtu on a peak day and 254,347 MMBtu on an annual basis. Northern states that the estimated cost to upgrade the delivery point is $24,000.

Any person or the Commission's staff may, within 45 days after issuance of the instant notice by the Commission, file pursuant to Rule 214 of the Commission's Procedural Rules (18 CFR 385.214) a motion to intervene or notice of intervention and pursuant to Section 157.205 of the Regulations under the Natural Gas Act (18 CFR 157.205) a protest to the request. If no protest is filed within the time allowed therefor, the proposed activity shall be deemed to be authorized effective the day after the time allowed for filing a protest. If a protest is filed and not withdrawn within 30 days after the time allowed for filing a protest, the instant request shall be treated as an application for authorization pursuant to Section 7 of the Natural Gas Act.

Linwood A. Watson, Jr.,

Acting Secretary.

[FR Doc. 99–8523 Filed 4–6–99; 8:45 am]

BILLING CODE 6717–01–M

DEPARTMENT OF ENERGY

Federal Energy Regulatory Commission

[Docket No. CP99–277–000]

Northwest Pipeline Corporation; Notice of Application

April 1, 1999.

Take notice that on March 30, 1999, Northwest Pipeline Corporation (Applicant), 295 Chipeta Way, Salt Lake City, Utah, 84158, filed in Docket No. CP99–277–000 an application pursuant to Sections 7(b) and 7(c) of the Natural Gas Act, as amended, and Subpart F of the Regulations of the Federal Energy Regulatory Commission's (Commission) thereunder, for permission and approval to: (1) Construct and operate 2,200 feet of relocated 26-inch mainline and the permanent operation of an emergency mainline block valve located near North Bonneville, Skamania County, Washington; and (2) abandon in place approximately 1,391 feet of the replaced 26-inch mainline, all as more fully set forth in the application which is on file with the Commission and open to public inspection.

Applicant states that the total estimated cost to construct the proposed facilities and abandon the replaced facilities is approximately $2,636,000.

Any person desiring to be heard or to make any protest with reference to said application should on or before April 8, 1999, file with the Federal Energy Regulatory Commission, Washington, D.C. 20426, a petition to intervene or a protest in accordance with the requirements of the Commission's Rules of Practice and Procedure (18 CFR 385.214 or 385.211) and the regulations under the Natural Gas Act (18 CFR 157.10). All protests filed with the Commission will be considered by it in determining the appropriate action to be taken but will not serve to make the protestants parties to the proceeding.

Any person wishing to become a party to the proceeding or to participate as a party in any hearing therein must file a petition to intervene in accordance with the Commission's Rules.

Take further notice that, pursuant to the authority contained in and subject to the jurisdiction conferred upon the Federal Energy Regulatory Commission by Sections 7 and 15 of the Natural Gas Act and the Commission's Rules of Practice and Procedure, a hearing will be held without further notice before the Commission on this application if no petition to intervene is filed within the time required herein, and if the Commission on its own review of the matter finds that the abandonment is required by the public convenience and necessity. If a petition for leave to intervene is timely filed, or if the Commission on its motion believes that a formal hearing is required, further notice of such hearing will be duly given.

Under the procedure herein provide for, unless otherwise advised, it will be unnecessary for Applicant to appear or be represented at the hearing.

Linwood A. Watson, Jr.,

Acting Secretary.

[FR Doc. 99–8519 Filed 4–6–99; 8:45 am]

BILLING CODE 6717–01–M

UNITED STATES OF AMERICA

Federal Energy Regulatory Commission

[Docket No. ER99–540–001, et al.]

Pacific Gas and Electric Company, et al.; Electric Rate and Corporate Regulation Filings

March 30, 1999.

Take notice that the following filings have been made with the Commission:

1. Pacific Gas and Electric Company

[Docket No. ER99–540–001]

Take notice that on March 25, 1999, Pacific Gas and Electric Company (PG&E), tendered for filing an amendment between PG&E, Western Area Power Administration (Western) and the United States of America, Department of Energy, Oakland Operations Office (DOE/OAK) (collectively, Parties), called ''Amendment to the Settlement for Power Delivery to the United States Department of Energy Laboratories'' (Amendment).

On November 6, 1998, PG&E submitted the ''Settlement Agreement for Power Delivery to the United States Department of Energy Laboratories'' (Agreement) to the Federal Energy Regulatory Commission (FERC) for filing and acceptance. In a January 13, 1999 letter (Compliance Letter) the FERC directed PG&E to, within 15 days, revise the Agreement by ''remov[ing] the retail rate adders and the charge for local distribution services''. The Parties sought and were granted two extensions to file the Compliance letter revisions. This Amendment is intended to implement the Compliance Letter revisions.

Copies of this filing have been served upon DOE/OAK, Western and the California Public Utilities Commission.

Comment date: April 14, 1999, in accordance with Standard Paragraph E at the end of this notice.

2. Elwood Marketing, LLC

[Docket No. ER99–1465–001]

Take notice that on March 25, 1999, Elwood Marketing, LLC tendered for filing a revised code of conduct in compliance with the order issued by the Commission on March 12, 1999 in the above captioned docket. Elwood Marketing, LLC, 86 FERC] 61,269 (1999).

Comment date: April 14, 1999, in accordance with Standard Paragraph E at the end of this notice.

3. Illinois Power Company

[Docket No. ER99–1650–000]

Take notice that on March 25, 1999, Illinois Power Company tendered for filing a response to the deficiency letter issued by the Director, Division of Rate Applications, Office of Electric Power Regulation in this docket on March 22, 1999.

Comment date: April 14, 1999, in accordance with Standard Paragraph E at the end of this notice.

4. Avista Corporation

[Docket No. ER99–2253–000]

Take notice that on March 25, 1999, Avista Corporation, tendered for filing with the Federal Energy Regulatory Commission pursuant to 18 CFR Section 35.13, an executed Mutual Netting Agreement allowing for arrangements of amounts which become due and owing to one Party to be set off against amounts which are due and owing to the other Party with American Electric Power.

Avista Corporation requests waiver of the prior notice requirement and requests an effective date of March 1, 1999.

Comment date: April 14, 1999, in accordance with Standard Paragraph E at the end of this notice.

5. UAE Lowell Power LLC

[Docket No. ER99–2255–000]

Take notice that on March 25, 1999, UAE Lowell Power LLC (ULP), tendered for filing an application for waivers and blanket approvals under various regulations of the Commission and for an order accepting ULP's FERC Electric Rate Schedule No. 2 to be effective on May 1, 1999, or on the date ULP's acquisition of the UAE Lowell Power Facility, a generation facility in Massachusetts closes.

Under its Rate Schedule No. 2, ULP intends to sell ancillary services generated by the Facility into the NEPOOL ancillary services markets.

Comment date: April 14, 1999, in accordance with Standard Paragraph E at the end of this notice.

6. Moreau Manufacturing Corporation

[Docket No. ER99–2256–000]

Take notice that on March 25, 1999, Moreau Manufacturing Corporation tendered for filing an amendment to its Unit Power Sales agreement with Niagara Mohawk Power Corporation.

Comment date: April 14, 1999, in accordance with Standard Paragraph E at the end of this notice.

7. Southwest Power Pool

[Docket No. ER99–2257–000]

Take notice that on March 25, 1999, Southwest Power Pool (SPP), tendered for filing an Agreement for Capacity and Energy Services in Southwest Power Pool (Agreement).

SPP states that the Agreement is intended to allow each party to the Agreement to call on other parties to provide capacity and energy when needed.

SPP requests waiver of the 60 days notice requirement of Section 35.3 of the Commission's Regulation, 18 CFR 35.3, to allow an effective date of May 1, 1999, for the filing.

Comment date: April 14, 1999, in accordance with Standard Paragraph E at the end of this notice.

8. Niagara Mohawk Power Corporation

[Docket No. ER99–2258–000]

Take notice that on March 25, 1999, Niagara Mohawk Power Corporation tendered for filing notice that effective the March 15, 1999, Rate Schedule FERC No. 184, effective date January 1, 1988, and filed with the Federal Energy Regulatory Commission by Niagara Mohawk Power Corporation is to be canceled.

Notice of the proposed cancellation has been served upon Moreau Manufacturing Corporation and Finch, Pruyn & Company, Incorporated.

Comment date: April 14, 1999, in accordance with Standard Paragraph E at the end of this notice.

9. Select Energy, Inc.

[Docket No. ER99–2259–000]

Take notice that on March 25, 1999, Select Energy, Inc. (Select), tendered for filing a long-term market based wholesale power contract with Georgetown Municipal Light Department, pursuant to Select's market-based rate authorization.

Select requests an effective date of March 1, 1999.

Copies of the filing were served upon Georgetown Municipal Light Department and the Massachusetts Department of Telecommunications and Energy.

Comment date: April 14, 1999, in accordance with Standard Paragraph E at the end of this notice.

10. Arizona Public Service Company

[Docket No. ER99–2260–000]

Take notice that on March 25, 1999, Arizona Public Service Company (APS), tendered for filing Umbrella Service Agreements to provide Short-Term Firm Point-to-Point Transmission Service to PG&E Energy Trading—Power, L.P., and Short-Term Firm and Non-Firm Point-to-Point Transmission Service to Mieco, Inc., under APS' Open Access Transmission Tariff.

A copy of this filing has been served on PG&E Energy Trading—Power, L.P., Mieco, Inc., and the Arizona Corporation Commission.

Comment date: April 14, 1999, in accordance with Standard Paragraph E at the end of this notice.

11. Consolidated Edison Company Of New York, Inc.

[Docket No. ER99–2261–000]

Take notice that on March 25, 1999, Consolidated Edison Company of New York, Inc. (Con Edison), tendered for filing a service agreement to provide firm transmission service pursuant to its Open Access Transmission Tariff to PP&L Energy Marketing Center (PP&L).

Con Edison states that a copy of this filing has been served by mail upon PP&L.

Comment date: April 14, 1999, in accordance with Standard Paragraph E at the end of this notice.

12. Consolidated Edison Company Of New York, Inc.

[Docket No. ER99–2262–0000]

Take notice that on March 25, 1999 Consolidated Edison Company of New York, Inc. (Con Edison), tendered for filing a service agreement to provide firm transmission service pursuant to its Open Access Transmission Tariff to the New York Power Authority (NYPA).

Con Edison states that a copy of this filing has been served by mail upon NYPA.

Comment date: April 14, 1999, in accordance with Standard Paragraph E at the end of this notice.

13. Wisconsin Electric Power Company

[Docket No. ER99–2263–000]

Take notice that on March 25, 1999, Wisconsin Electric Power Company (Wisconsin Electric), tendered for filing electric service agreements under its Market Rate Sales Tariff (FERC Electric Tariff, Original Volume No. 8) and its Coordination Sales Tariff (FERC Electric Tariff, Original Volume No. 2) with DukeSolutions, Inc.

Wisconsin Electric respectfully requests an effective date of March 24, 1999, to allow for economic transactions.

Copies of the filing have been served on DukeSolutions, Inc., the Michigan Public Service Commission, and the Public Service Commission of Wisconsin.

Comment date: April 14, 1999, in accordance with Standard Paragraph E at the end of this notice.

14. Northeast Utilities Service Company

[Docket No. ER99–2264–000]

Take notice that on March 25, 1999, Northeast Utilities Service Company (NUSCO) on behalf of its affiliates, The Connecticut Light and Power Company, Western Massachusetts Electric Company, Holyoke Water Power Company, Holyoke Power and Electric Company, and Public Service Company of New Hampshire, tendered for filing a Service Agreement with H.Q. Energy Services (U.S.) Inc., under the NU System Companies' Sale for Resale, Tariff No. 7.

NUSCO requests an effective date of March 25, 1999, or such other earliest date as permitted by the Commission.

NUSCO states that a copy of this filing was mailed to HQ Energy Services (U.S.) Inc.

Comment date: April 14, 1999, in accordance with Standard Paragraph E at the end of this notice.

15. Central Illinois Light Company

[Docket No. ER99–2265–000]

Take notice that on March 25, 1999, Central Illinois Light Company (CILCO), 300 Liberty Street, Peoria, Illinois 61602, tendered for filing with the Commission a substitute Index of Point-To-Point Transmission Service Customers under its Open Access Transmission Tariff and service agreements with three new customers, PG&E Energy Trading-Power, L.P., Alliant Energy Industrial Services, Inc., and DukeSolutions, Inc.

CILCO requested an effective date of March 22, 1999.

Copies of the filing were served on the affected customers and the Illinois Commerce Commission.

Comment date: April 14, 1999, in accordance with Standard Paragraph E at the end of this notice.

16. Moreau Manufacturing Corporation

[Docket No. ER99–2266–000]

Take notice that on March 25, 1999, Moreau Manufacturing Corporation tendered for filing an amendment to its Unit Power Sales agreement with Niagara Mohawk Power Corporation.

Moreau requests waiver of the requirement for sixty days advance notice and a retroactive effective date of January 1, 1988.

Comment date: April 14, 1999, in accordance with Standard Paragraph E at the end of this notice.

17. Public Service Company of New Mexico

[Docket No. ER99–2267–000]

Take notice that on March 25, 1999, Public Service Company of New Mexico (PNM), tendered for filing executed service agreements, for point-to-point transmission service under the terms of PNM's Open Access Transmission Service Tariff, with Colorado River Storage Project Customer Service Center of Western Area Power Administration (2 agreements, dated March 23, 1999, for Non-Firm and Short-Term Firm Service).

PNM's filing is available for public inspection at its offices in Albuquerque, New Mexico.

Comment date: April 14, 1999, in accordance with Standard Paragraph E at the end of this notice.

18. Monongahela Power Company, The Potomac Edison Company and West Penn Power Company (Allegheny Power)

[Docket No. ER99–2270–000]

Take notice that on March 25, 1999, Monongahela Power Company, The Potomac Edison Company and West Penn Power Company (Allegheny Power), tendered for filing unexecuted network integration transmission service and network operating agreements for Monongahela Power Company's wholesale customers the City of Philippi, Harrison Rural Electrification Association and the City of New Martinsville.

The effective date for each agreement corresponds to the dates authorized by the Commission in Docket No. ER99–1141–000.

Copies of the filing have been provided to the Public Utilities Commission of Ohio, the Pennsylvania Public Utility Commission, the Maryland Public Service Commission, the Virginia State Corporation Commission, the West Virginia Public Service Commission, and all parties of record.

Comment date: April 14, 1999, in accordance with Standard Paragraph E at the end of this notice.

19. Avista Corporation

[Docket No. ER99–2254–000]

Take notice that on March 25, 1999, Avista Corporation tendered for filing with the Federal Energy Regulatory Commission pursuant to 18 CFR Section 35.13, an executed Mutual Netting Agreement allowing for arrangements of amounts which become due and owing to one Party to be set off against amounts which are due and owing to the other Party with Merchant Energy Group of the Americas, Inc.

Avista Corporation requests waiver of the prior notice requirement and requests an effective date of March 1, 1999.

Comment date: April 14, 1999, in accordance with Standard Paragraph E at the end of this notice.

Standard Paragraphs

E. Any person desiring to be heard or to protest such filing should file a motion to intervene or protest with the Federal Energy Regulatory Commission, 888 First Street, N.E., Washington, D.C. 20426, in accordance with Rules 211 and 214 of the Commission's Rules of Practice and Procedure (18 CFR 385.211 and 385.214). All such motions or protests should be filed on or before the comment date. Protests will be considered by the Commission in determining the appropriate action to be taken, but will not serve to make protestants parties to the proceeding. Any person wishing to become a party must file a motion to intervene. Copies of these filings are on file with the Commission and are available for public inspection. This filing may also be viewed on the Internet at http://www.ferc.fed.us/online/rims.htm (call 202–208–2222 for assistance).

David P. Boergers

Secretary.

[FR Doc. 99–8583 Filed 4–6–99; 8:45 am]

BILLING CODE 6717–01–P

DEPARTMENT OF ENERGY

Federal Energy Regulatory Commission

[Docket No. CP99–241–000]

ANR Pipeline Company; Notice of Intent To Prepare in Environmental Assessment for the Project and Request for Comments on Environmental Issues

April 1, 1999.

The staff of the Federal Energy Regulatory Commission (FERC or Commission) will prepare an environmental assessment (EA) that will discuss the environmental impacts of the Wisconsin Expansion Project Construction and operation of facilities by ANR Pipeline Company (ANR) in Kendall and McHenry Counties, Illinois and Waupaca and Rock Counties, Wisconsin.[1] These facilities would consist of about 3.11 miles of 16-inch and 42-inch-diameter pipeline, and 23,000 horsepower (hp) of compression. This EA will be used by the Commission in its decisionmaking process to determine whether the projects is in the public convenience and necessity. The application and other supplemental filings in this docket are available for viewing on the FERC Internet website (www.ferc.fed.us). Click on the ''RIMS'' link, select ''Docket #'' from the RIMS Menu, and follow the instructions.

Similarly, the ''CIPS'' link on the FERC Internet website provides access to the texts of formal documents issued by the Commission, such as orders, notices, and rulemakings. From the FERC Internet website, click on the ''CIPS'' link, select ''Docket #'' from the CIPS menu, and follow the instructions.

If you are a landowner receiving this notice, you may be contacted by a pipeline company representative about the acquisition of any easement to construct, operate, and maintain the proposed facilities. The pipeline company would seek to negotiate a mutually acceptable agreements. However, if the project is approved by the Commission, that approval conveys with it the right of eminent domain. Therefore, it easement negotiations fail to produce an agreement, the pipeline company could initiate condemnation proceedings in accordance with state law. A fact sheet addressing a number of typically asked questions, including the use of eminent domain, is attached to this notice as appendix 1.[2]

[1] ANR's application was filed with the Commission under Section 7 of the Natural Gas Act and Part 157 of the Commission's regulations.

Summary of the Proposed Project

ANR want to install certain additional loop pipeline and expand the capacity of its facilities in Illinois and Wisconsin to increase its transmission capacity by up to 194 million Decatherms per day of natural gas between the ANR Joliet Hub and its Wisconsin market area. ANR seeks authority to construct and operate:

- About 3.0 miles of 42-inch-diameter pipeline loop at its Michigan Leg South System in Kendall County, Illinois;
- Two 10,000-horsepower (ph) compressor units at its existing Woodstock Compressor Station in McHenry County, Illinois;
- One 1,500-hp compressor unit at its existing Weyauwega Compressor Station in Waupaca County, Wisconsin;
- About 0.11 mile of 16-inch-diameter pipeline from the Weyauwega Compressor Station to ANR's Marinette Junction tap site on its existing 24-inch-diameter mainline in Waupaca County, Wisconsin; and
- One 1,500-hp compressor unit at its existing Janesville Compressor Station in Rock County, Wisconsin and minor related facilities.

The location of the project facilities is shown in appendix 1.[2]

Land Requirement for Construction

Construction of the proposed facilities would require about 57.4 acres of land. Following construction, about 42.9 acres would be maintained as permanent right-of-way. The remaining 14.5 acres of land would be restored and allowed to revert to its former use. All construction at ANR's Woodstock Compressor Station in McHenry County, Illinois and its Janesville Compressor Station in Rock County, Wisconsin would occur within each locations' 20-acre site.

The EA Process

The National Environmental Policy Act (NEPA) requires the Commission to take into account the environmental impacts that could result from an action whenever it considers the issuance of a Certificate of Public Convenience and Necessity. NEPA also requires us to discover and address concerns the public may have about proposals. We call this ''scoping''. The main goal of the scoping process is to focus the analysis in the EA on the important environmental issues. By this Notice of

[2] The appendices referenced in this notice are not being printed in the **Federal Register.** Copies are available from the Commission's Public Reference and Files Maintenance Branch, 888 First Street, N.E., Washington, D.C. 20426, or call (202) 208–1371. Copies of the appendices were sent to all those receiving this notice in the mail.

Intent, the Commission requests public comments on the scope of the issues it will address in the EA. All comments received are considered during the preparation of the EA. State and local government representatives are encouraged to notify their constitutents of this proposed action and encourage them to comment on their areas of concern.

The EA will discuss impacts that could occur as a result of the construction and operation of the proposed project under these general headings:

- Geology and soils
- Water resources, fisheries, and wetlands
- Vegetation and wildlife
- Air quality and noise
- Land use
- Endangered and threatened species
- Public safety
- Cultural resources

We will also evaluate possible alternatives to the proposed project or portions of the projects, and make recommendations on how to lessen or avoid impacts on the various resource areas.

Our independent analysis of the issues will be in the EA. Depending on the comments received during the scoping process, the EA may be published and mailed to Federal, State, and local agencies, public interest groups, interested individuals, affected landowners, newspapers, libraries, and the Commission's official service list for this proceeding. A comment period will be allotted for review if the EA is published. We will consider all comments on the EA before we make our recommendations to the Commission.

To ensure your comments are considered, please carefully follow the instructions in the public participation section on page 4 of this notice.

Currently Identified Environmental Issues

We have already identified several issues that we think deserve attention based on the preliminary review of the proposed facilities and the environmental information provided by ANR. This preliminary list of issues may be changed based on your comments and our analysis.

- Two federally listed endangered or threatened species may occur in the proposed project area.
- Noise levels around the compressor stations would increase.
- Effects of construction and operation of the proposed facilities on near-by residences.

Public Participation

You can make a difference by providing us with your specific comments or concerns about the project. By becoming a commentor, your concerns will be addressed in the EA and considered by the Commission. You should focus on the potential environmental effects of the proposal, alternatives to the proposal, and measures to avoid or lessen environmental impact. The more specific your comments, the more useful they will be. Please carefully follow these instructions to ensure that your comments are received in time and properly recorded:

- Send two copies of your letter to: David P. Boergers, Secretary, Federal Energy Regulatory Commission, 888 First St., N.E., Room 1A, Washington, DC 20416;
- Label one copy of the comments for the attention of the Environmental Review and Compliance Branch, PR–11.1;
- Reference Docket No. CP99–241–000; and
- Mail your comments so that they will be received in Washington, DC on or before May 3, 1999.

Becoming an Intervenor

In addition to involvement in the EA scoping process, you may want to become an official party to the proceeding known as an ''intervenor''. Intervenors play a more formal role in the process. Among other things, intervenors have the right to receive copies of case-related Commission documents and filings by other intervenors. Likewise, each intervenor must provide 14 copies of its filing to the Secretary of the Commission and must send a copy of its filings to all other parties on the Commission's service list for this proceeding. If you want to become an intervenor you must file a motion to intervene according to Rule 214 of the Commission's Rules of Practice and Procedure (18 CFR 385.214) (see appendix 3). Only intervenors have the right to seek rehearing of the Commission's decision.

You do not need intervenor status to have your environmental comments considered. Additional information about the proposed project is available from Mr. Paul McKee of the Commission's Office of External Affairs at (202) 208–1088 or on the FERC website (www.ferc.fed.us) using the ''RIMS'' link to information in this docket number. For assistance with access to RIMS, the RIMS helpline can be reached at (202) 208–2222. Access to the texts of formal documents issued by the Commission with regard to this docket, such as orders and notices, is also available on the FERC website using the ''CIPS'' link. For assistance with access to CIPS, the CIPS helpline can be reached at (202) 208–2474.

Linwood A. Watson, Jr.,

Acting Secretary.

[FR Doc. 99–8521 Filed 4–6–99; 8:45 am]

BILLING CODE 6717–01–M

DEPARTMENT OF ENERGY

Federal Energy Regulatory Commission

[Project No. 1991–009, Idaho]

City of Bonners Ferry; Notice of Availability of Final Environmental Assessment

April 1, 1999.

In accordance with the National Environmental Policy Act of 1969 and the Federal Energy Regulatory Commission's (Commission) regulations, 18 CFR Part 380 (Order No. 486, 52 FR 47897), the Office of Hydropower Licensing has reviewed the application for a new license for the Moyie River Hydroelectric Project. The project is located near Moyie Springs, in Boundary County, Idaho.

On September 15, 1998, the Commission staff issued a draft environmental assessment (DEA) for the project and requested that comments be filed with the Commission within 30 days. Comments on the DEA were filed and are addressed in the final environmental assessment (FEA) for the project.

The FEA contains the staff's analysis of the potential environmental impacts of the project and concludes that licensing the project, with appropriate environmental protective measures, would not constitute a major federal action that would significantly affect the quality of the human environment.

Copies of the FEA are available for review in the Public Reference Room, Room 2A, of the Commission's offices at 888 First Street, NE., Washington, DC 20426. The EA may also be viewed on the web at http://www.ferc.fed.us/online/rims.htm (please call (202) 208–2222 for assistance).

Linwood A. Watson, Jr.,

Acting Secretary.

[FR Doc. 99–8585 Filed 4–6–99; 8:45 am]

BILLING CODE 6717–01–M

DEPARTMENT OF ENERGY

Federal Energy Regulatory Commission

Notice of Scoping Meetings and Site Visit and Soliciting Scoping Comments

April 1, 1999.

Take notice that the following hydroelectric application has been filed with the Commission and is available for public inspection:

a. *Type of Application:* Major New License.

b. *Project No.:* P–2661–012.

c. *Date filed:* September 24, 1998.

d. *Applicant:* Pacific Gas and Electric Company.

e. *Name of Project:* Hat Creek Hydroelectric Project.

f. *Location:* On Hat Creek in Shasta County, California. About 6.57 acres of the project occupy lands of the U.S. Forest Service, Shasta National Forest.

g. *Filed Pursuant to:* Federal Power Act 16 U.S.C. 791(a)–825(r).

h. *Applicant Contact:* Mr. Terry Morford, Manager, Hydro Generation, Pacific Gas and Electric Company, P.O. Box 770000, N11C, San Francisco, California 94177, (415) 973–4603.

i. *FERC Contact:* David Turner, David.Turner@FERC.FED.US, (202) 219–2844.

j. *Deadline for filing scoping comments:* June 7, 1999:

All documents (original and eight copies) should be filed with: David P. Boergers, Secretary, Federal Energy Regulatory Commission, 888 First Street, NE, Washington, DC 20426.

The Commission's Rules of Practice and Procedures require all intervenors filing documents with the Commission to serve a copy of that document on each person whose name appears on the official service list for the project. Further, if an intervenor files comments or documents with the Commission relating to the merits of an issue that may affect the responsibilities of a particular resource agency, they must also serve a copy of the document on that resource agency.

k. *Status of Environmental Analysis:* This application is not ready for environmental analysis at this time.

l. *Description of Project:* The run-of-river project consists of two developments: Hat Creek No. 1 and Hat Creek No. 2.

Hat Creek No. 1 consists of: (1) A 12-foot-high, 231-foot-long concrete buttress overflow diversion dam impounding a 13-acre reservoir at a water surface elevation of 3,188 feet (referred to as Cassel Pond); (2) a 2,270-foot-long, 9-foot-deep, 30-foot-wide canal with a hydraulic capacity of about 600 cfs; (3) a 14-foot-high, 750-foot-long shotcreted earthfill forebay with an overflow spillway, having a surface area of about 2 acres; (4) a 1,600-foot-long, riveted steel penstock that varies in inside diameter from 12 feet at the intake to 7 feet-six inches at the powerhouse; (5) a 43 foot by 56.5 foot reinforced concrete powerhouse containing a Francis/Vertical shaft turbine with a generating capacity of 10,000 kilowatt (kW).

Hat Creek No. 2 consists of: (1) Crystal Lake, a natural lake with a surface area of 115 acres at a water surface elevation of 2,980 feet: (2) a 29-foot-high, 120-foot-long concrete gravity overflow diversion dam impounding an 89-acre reservoir at a water surface elevation of 2,975 feet (referred to as Baum Lake); (3) a 4,520 foot-long, 7-foot-deep, 18-foot-wide reinforced concrete flume, with a hydraulic capacity of 600 cfs; (4) a 414-foot-long riveted steel penstock with an inside diameter varying from 14 feet at the intake to 7 feet-six inches at the powerhouse; and (5) a 43 foot by 56.5 foot reinforced concrete powerhouse containing a Francis/Vertical shaft turbine with a generating capacity of 10,000 kW.

m. *Locations of Application:* A copy of the application is available for inspection and reproduction at the Commission's Public Reference Room, located at 888 First Street, NE, Room 2A, Washington, D.C. 20426, or by calling (202) 208–1371. This filing may be viewed on http://www.ferc.fed.us/online/rims.htm (call 202–208–2222 for assistance). A copy is also available for inspection and reproduction at the address in item h above.

n. *Scoping Process:* The Commission intends to prepare an Environmental Assessment (EA) on the project in accordance the National Environmental Policy Act. The EA will consider both site-specific and cumulative environmental impacts and reasonable alternatives to the proposed action.

Scoping Meetings

The Commission will hold scoping meetings, one in the daytime and one in the evening, to help us identify the scope of issues to be addressed in the EA.

The daytime scoping meeting will focus on resource agency concerns, while the evening scoping meeting is primarily for public input. All interested individuals, organizations, and agencies are invited to attend one or both of the meetings, and to assist the staff in identifying the scope of the environmental issues that should be analyzed in the EA. The times and locations of these meetings are as follows:

Evening Meeting

Wednesday May 5, 1999, 7:00 p.m. until 10:00 p.m., Burney Senior Center, 20635 Roff Way, Burney, California 96013

Daytime Meeting

Thursday, May 6, 1999, 9 a.m. until 12:00 p.m., Redding Senior Center, 2290 Benton Drive, Redding, California 96003–2152

To help focus discussions, we will distribute a Scoping Document (SD1) outlining the subject areas to be addressed in the EA to the parties on the Commission's mailing list. Copies of the SD1 also will be available at the scoping meetings.

Site Visit

The applicant and Commission staff will conduct a project site visit on Wednesday, May 5, 1999. We will meet at the Hat Creek No. 1 powerhouse parking lot at 9 a.m.

Objectives

At the scoping meetings, the staff will: (1) summarize the environmental issues tentatively identified for analysis in the EA; (2) solicit from the meeting participants all available information, especially quantifiable data, on the resources at issue; (3) encourage statements from experts and the public on issues that should be analyzed in the EA, including viewpoints in opposition to, or in support of, the staff's preliminary views; (4) determine the resource issues to be addressed in the EA; and (5) identify those issues that require a detailed analysis, as well as those issues that do not require a detailed analysis.

Procedures

The meetings will be recorded by a stenographer and will become part of the formal record of the Commission proceeding on the project. Individuals presenting statements at the meetings will be asked to sign in before the meeting starts and to clearly identify themselves for the record.

Individuals, organizations, and agencies with environmental expertise and concerns are encouraged to attend the meetings and to assist the staff in defining and clarifying the issues to be addressed in the EA.

Linwood A. Watson, Jr.,

Acting Secretary.

[FR Doc. 99–8524 Filed 4–6–99; 8:45 am]

BILLING CODE 6717–01–M

DEPARTMENT OF ENERGY

Federal Energy Regulatory Commission

[Project No. 2494–002]

Puget Sound Energy, Inc.; Notice of Meeting

April 1, 1999.

A meeting will be convened by staff of the Office of Hydropower Licensing on April 23, 1999, at 1:30 p.m. EDT at the Commission's Headquarters, room 62–26, located at 888 First Street, NE, Washington, DC.

By letter dated March 26, 1999, Puget Sound Energy requested a meeting to provide an update on the White River collaborative settlement process and provided an outline of issues to be discussed.

We will not discuss issues dealing with the pending rehearing of the Commission's December 19, 1997, order issuing license for the project. We will restrict discussion primarily to process issues related to setting up and conducting a collaborative settlement process.

If a federal agency wishes to participate by teleconference, they need to call 1–700–991–1854 and enter access code 25369. A non-federal agency should call 1–800–545–4387 and an operator will answer. They will need to give the operator the conference identification number: M58619. The operator will ask them for their name and phone number. The AT&T conference operator will then call them back and they will be part of this conference call.

Any person wishing to attend or needing additional information should contact John Smith at (202) 219–2460 or e-mail at john.smith@ferc.fed.us.

Linwood A. Watson, Jr.,

Acting Secretary.

[FR Doc. 99–8584 Filed 4–6–99; 8:45 am]

BILLING CODE 6717–01–M

ENVIRONMENTAL PROTECTION AGENCY

[FRL–6320–6]

Agency Information Collection Activities: Continuing Collection; Comment Request; Registration of Fuels and Fuel Additives—Health-effects Research Requirements for Manufacturers

AGENCY: Environmental Protection Agency (EPA).

ACTION: Notice.

SUMMARY: In compliance with the Paperwork Reduction Act (44 U.S.C. 3501 *et seq.*), this notice announces that EPA is planning to submit the following continuing Information Collection Request (ICR) to the Office of Management and Budget (OMB): Registration of Fuels and Fuel Additives—Health-effects Research Requirements for Manufacturers (40 CFR part 79—Subpart F) (EPA ICR Number 1696.03, OMB Control Number 2060–0297, expiration date: 7–31–99). Before submitting the ICR to OMB for review and approval, EPA is soliciting comments on specific aspects of the proposed information collection as described below.

DATES: Comments must be submitted on or before June 7, 1999.

ADDRESSES: Fuels and Energy Division, Office of Mobile Sources, Office of Air and Radiation, Mail Code 6406J, U.S. Environmental Protection Agency, Washington, DC 20460. A paper or electronic copy of the ICR may be obtained without charge by contacting the person listed below.

FOR FURTHER INFORMATION CONTACT: James W. Caldwell, (202) 564–9303, fax: (202) 565–2085, caldwell.jim@epa.gov.

SUPPLEMENTARY INFORMATION: *Affected entities:* Entities potentially affected by this action are those which manufacture or import gasoline or diesel fuel, or manufacture or import an additive for gasoline or diesel fuel.

Title: Registration of Fuels and Fuel Additives—Health-effects Research Requirements for Manufacturers (40 CFR part 79—Subpart F), OMB Control Number 2060–0297, EPA ICR Number 1696.03, Expiring: 7–31–99.

Abstract: In accordance with the regulations at 40 CFR part 79, Subparts A, B, C, and D, Registration of Fuels and Fuel Additives, manufacturers (including importers) of gasoline and diesel fuel, and manufacturers (including importers) of additives for gasoline or diesel fuel, are required to have their products registered by EPA prior to their introduction into commerce. Registration involves providing a chemical description of the fuel or additive, and certain technical, marketing, and health-effects information. The development of health-effects data, as required by 40 CFR part 79, Subpart F, is the subject of this ICR. The information collection requirements for Subparts A through D, and the supplemental notification requirement of Subpart F (indicating how the manufacturer will satisfy the research requirements) are covered by a separate ICR (EPA ICR Number 309.09, OMB Control Number 2060–1050). The health-effects information will be used to determine if there are any products whose evaporative or combustion emissions pose an unreasonable risk to public health, thus meriting further investigation and potential regulation. This information is required for specific groups of fuels and additives as defined in the regulations. For example, all gasolines and gasoline additives which consist of only carbon, hydrogen, oxygen, nitrogen, and/or sulphur, and which involve a gasoline oxygen content of less than 1.5 weight percent, fall into a ''baseline'' group. Oxygenates, such as ethanol and methyl tertiary butyl ether (MTBE), when used in gasoline at oxygen levels of at least 1.5 weight percent, define separate ''nonbaseline'' groups for each oxygenate. Additives which contain elements other than carbon, hydrogen, oxygen, nitrogen, and/or sulphur fall into separate ''atypical'' groups. There are similar grouping requirements for diesel fuels and additives.

Manufacturers may perform the research independently or may join with other manufacturers to share in the costs for each applicable group. Several research consortiums (groups of manufacturers) have been formed. The largest consortium, organized by the American Petroleum Institute (API), represents most of the manufacturers of baseline and nonbaseline gasolines, diesel fuels, and additives. The research is structured into three tiers of requirements for each group. Tier 1 requires an emissions characterization and a literature search for information on the health effects of those emissions. Voluminous Tier 1 data were submitted by API and others in 1997. Tier 2 requires short-term inhalation exposures of laboratory animals to emissions to screen for adverse health effects. Alternative Tier 2 testing can be required in lieu of the standard Tier 2 if EPA concludes that such testing would be more appropriate. The EPA reached that conclusion with respect to gasoline and gasoline-oxygenate blends, and alternative requirements have been established for the API consortium for baseline gasoline and six gasoline-oxygenate blends. A similar situation exists with the Ethyl Corporation and its manganese additive MMT, and alternative requirements have been proposed. The API submitted Tier 2 data for diesel in 1997. Tier 3 provides for follow-up research, if necessary. No Tier 3 requirements have been established, and it is unlikely that any will be during the next three years. Thus, Tier 3 is not addressed in this ICR. An agency may not conduct or

sponsor, and a person is not required to respond to, a collection of information unless it displays a currently valid OMB control number. The OMB control numbers for EPA's regulations are listed in 40 CFR Part 9 and 48 CFR Chapter 15.

The EPA would like to solicit comments to:

(i) evaluate whether the proposed collection of information is necessary for the proper performance of the functions of the agency, including whether the information will have practical utility;

(ii) evaluate the accuracy of the agency's estimate of the burden of the proposed collection of information, including the validity of the methodology and assumptions used;

(iii) enhance the quality, utility, and clarity of the information to be collected; and

(iv) minimize the burden of the collection of information on those who are to respond, including through the use of appropriate automated electronic, mechanical, or other technological collection techniques or other forms of information technology, e.g., permitting electronic submission of responses.

Burden Statement: There are approximately 200 fuel manufacturers, 700 additive manufacturers, 600 registered fuels, and 5500 registered additives. Due to the costs, it is likely that only limited additional Tier 1 research will be done. Future fuels and additives will almost exclusively be those that can group with existing Tier 1 data, and likely will come from manufacturers that have already paid for the Tier 1 research. It is estimated that new Tier 1 research will cost $0.5 million per product, and that there will be only one Tier 1 submission over the next three years. Standard Tier 2 activity also will be very limited. The EPA has concluded that existing data cover standard Tier 2 for baseline diesel. Baseline gasoline, the six major nonbaseline gasoline oxygenates, and the atypical gasoline additive MMT, are subject to alternative Tier 2 requirements. It is estimated that new standard Tier 2 research will cost $1 million per product, and that there will only be four standard Tier 2 submissions over the next three years. It is estimated that the alternative Tier 2 testing for gasoline and oxygenates will cost $15 million over five years. It is estimated that the alternative Tier 2 testing for MMT will cost $10 million over five years. Burden means the total time, effort, or financial resources expended by persons to generate, maintain, retain, or disclose or provide information to or for a Federal agency. This includes the time needed to review instructions; develop, acquire, install, and utilize technology and systems for the purposes of collecting, validating, and verifying information, processing and maintaining information, and disclosing and providing information; adjust the existing ways to comply with any previously applicable instructions and requirements; train personnel to be able to respond to a collection of information; search data sources; complete and review the collection of information; and transmit or otherwise disclose the information.

Dated: March 25, 1999.

John W. Holley,

Acting Director, Fuels and Energy Division.

[FR Doc. 99–8632 Filed 4–6–99; 8:45 am]

BILLING CODE 6560–50–P

ENVIRONMENTAL PROTECTION AGENCY

[FRL–6320–7]

Agency Information Collection Activities: Submission for OMB Review; Comment Request; National Estuary Program

AGENCY: Environmental Protection Agency (EPA).

ACTION: Notice.

SUMMARY: In compliance with the Paperwork Reduction Act (44 U.S.C. 3501 *et seq.*), this document announces that the following Information Collection Request (ICR) has been forwarded to the Office of Management and Budget (OMB) for review and approval: National Estuary Program, EPA ICR Number 1500.04, OMB Control Number 2040–0138, expiration date: June 30, 1999. The ICR describes the nature of the information collection and its expected burden and cost; where appropriate, it includes the actual data collection instrument.

DATES: Comments must be submitted on or before May 7, 1999.

FOR FURTHER INFORMATION CONTACT: Contact Sandy Farmer at EPA by phone at (202) 260–2740, by email at farmer.sandy@epamail.epa.gov, or download off the Internet at http://www.epa.gov/icr and refer to EPA ICR No. 1500.04.

SUPPLEMENTARY INFORMATION: *Title*: National Estuary Program (OMB Control No. 2040–0138; EPA ICR No. 1500.04) expiring 6/30/99. This is a request for extension of a currently approved collection.

Abstract: *Annual Workplans:* The National Estuary Program (NEP) involves collecting information from those state or local agencies or nongovernmental organizations that receive funds under section 320 of the Clean Water Act. The regulation requiring this information is found at 40 CFR part 35. Prospective grant recipients seek funding to develop or oversee and coordinate implementation of comprehensive conservation and management plans (CCMP) for estuaries of national significance. In order to receive funds, grantees must submit an annual workplan to EPA. The workplan consists of two parts: (a) progress on projects funded previously; and (b) new projects proposed with dollar amounts and completion dates. The workplan is reviewed by EPA and also serves as the scope of work for the grant agreement. EPA also uses these workplans to track performance of each of the 28 estuary programs currently in the NEP.

Biennial Reviews: EPA provides funding to NEPs after their CCMPs have been approved by the Administrator if such programs demonstrate adequate progress in implementing their CCMPs through a biennial review process. Biennial reviews are used to determine progress each NEP is making in implementing its CCMP and achieving environmental results. In addition to evaluating progress, the results are used to identify areas of weakness each NEP should address for long-term success in protecting and restoring their estuaries. EPA will also compile successful tools and approaches as well as lessons learned from all biennial reviews to transfer to the NEPs and other watershed programs. For this ICR cycle, biennial reviews will be required of the first 17 NEPs in FY1999 and the first 21 NEPs in FY2001. Biennial reviews are required in addition to annual workplans.

An agency may not conduct or sponsor, and a person is not required to respond to, a collection of information unless it displays a currently valid OMB control number. The OMB control numbers for EPA's regulations are listed in 40 CFR part 9 and 48 CFR Chapter 15. The **Federal Register** document required under 5 CFR 1320.8(d), soliciting comments on this collection of information was published on 12/23/98 (63 FR 71115); no comments were received.

Burden Statement: The annual public recording and recordkeeping burden for this collection of information is estimated to average 100 hours per response for annual workplans and 250 hours per response for biennial review. Burden means the total time, effort or financial resources expended by persons to generate, maintain, retain or disclose or provide information to or for a

Federal agency. This includes the time needed to review instructions; develop, acquire, install, and utilize technology and systems for the purposes of collecting, validating, and verifying information, processing and maintaining information and disclosing and providing information; adjust the existing ways to comply with any previously applicable instructions and requirements; train personnel to be able to respond to a collection of information; search data sources; complete and review the collection of information; and transmit or otherwise disclose the information.

Respondents/Affected Entities: state or local governments or nongovernmental organizations.

Estimated Number of Respondents: 28.

Frequency of Response: annual workplans; biennial reviews.

Estimated Total Annual Hour Burden: 5,967 hours.

Estimated Total Annualized Cost Burden: $0.

Send comments on the Agency's need for this information, the accuracy of the provided burden estimates, and any suggested methods for minimizing respondent burden, including through the use of automated collection techniques to the following addresses. Please refer to EPA ICR No. 1500.04 and OMB Control No. 2040–0138 in any correspondence.

Ms. Sandy Farmer, U.S. Environmental Protection Agency, OP Regulatory Information Division (2137), 401 M Street, SW, Washington, DC 20460; and

Office of Information and Regulatory Affairs, Office of Management and Budget, Attention: Desk Officer for the EPA, 725 17th Street, NW, Washington, DC 20503.

Dated: March 31, 1999.

Joseph Retzer,

Director, Regulatory Information Division.

[FR Doc. 99–8633 Filed 4–6–99; 8:45 am]

BILLING 6560–50–P

ENVIRONMENTAL PROTECTION AGENCY

[OPP–00593; FRL–6074–7]

Pesticides; Policy Issues Related to the Food Quality Protection Act

AGENCY: Environmental Protection Agency (EPA).

ACTION: Notice of availability.

SUMMARY: To assure that EPA's policies related to implementing the Food Quality Protection Act (FQPA) are transparent and open to public participation, EPA is soliciting comments on a draft policy paper entitled ''Choosing a Percentile of Acute Dietary Exposure as a Threshold of Regulatory Concern.'' This notice is the seventh in a series concerning science policy documents related to FQPA and developed through the Tolerance Reassessment Advisory Committee (TRAC).

DATES: Written comments for this policy paper, identified by docket control number OPP–00593, should be submitted by June 7, 1999.

ADDRESSES: Comments may be submitted by mail, electronically or in person. Please follow the detailed instructions for each method as provided in Unit I.C. of the ''SUPPLEMENTARY INFORMATION'' section of this document.

FOR FURTHER INFORMATION CONTACT: Kathleen Martin, Environmental Protection Agency (7509C), 401 M St., SW., Washington, DC 20460. Telephone number: (703) 308-2857, fax: 703-305-5147, and e-mail address: martin.kathleen@epa.gov.

SUPPLEMENTARY INFORMATION:

I. General Information

A. Does This Notice Apply to Me?

You may be potentially affected by this notice if you manufacture or formulate pesticides. Potentially affected categories and entities may include, but are not limited to:

Categories	NAICS	Examples of potentially affected entities
Pesticide producers	32532	Pesticide manufacturers Pesticide formulators

This listing is not intended to be exhaustive, but rather provides a guide for readers regarding entities likely to be affected by this action. Other types of entities not listed could also be affected. If available, the North American Industrial Classification System (NAICS) codes have been provided to assist you and others in determining whether or not this notice affects certain entities. If you have any questions regarding the applicability of this announcement to you, consult the person listed in the ''FOR FURTHER INFORMATION CONTACT'' section of this document.

B. How Can I Get Additional Information or Copies of This Document or Other Documents?

1. *Electronically*. You may obtain electronic copies of this document and the science policy paper at http://www.epa.gov/pesticides/. On the Office of Pesticide Program Home Page select ''TRAC'' and then look up the entry for this document. You can also go directly to the listings at the EPA Home Page at the **Federal Register** — Environmental Documents entry for this document under ''Laws and Regulations'' (http://www.epa.gov/fedrgstr/) to obtain this notice and the science policy paper.

2. *Fax on Demand*. You may request to receive a faxed copy of this document, as well as supporting information, by using a faxphone to call (202) 401–0527 and selecting item 6034. You may also follow the automated menu.

3. *In person or by phone*. If you have any questions or need additional information about this action, you may contact the person identified in the ''FOR FURTHER INFORMATION CONTACT'' section of this document. In addition, the official record for the science policy paper listed in the ''SUMMARY'' section of this document, including the public version, has been established under docket control number OPP–00593 (including comments and data submitted electronically as described below). A public version of each record, including printed, paper versions of any electronic comments, which does not include any information claimed as Confidential Business Information (CBI), is available for inspection in Rm. 119, Crystal Mall #2, 1921 Jefferson Davis Highway, Arlington, VA, from 8:30 a.m. to 4 p.m., Monday through Friday, excluding legal holidays. The Public Information and Records Integrity Branch telephone number is (703) 305–5805.

C. How and to Whom Do I Submit Comments?

You may submit comments through the mail, in person or electronically. Be sure to include docket control number OPP–00593 in your correspondence.

1. *By mail*. Submit written comments to: Public Information and Records Integrity Branch, Information Resources and Services Division (7502C), Office of Pesticide Programs, Environmental Protection Agency, 401 M St., SW., Washington, DC 20460.

2. *In person or by courier*. Deliver written comments to: Public Information and Records Integrity Branch, Information Resources and Services Division (7502C), Office of

Pesticide Programs, Environmental Protection Agency, Rm. 119, Crystal Mall #2, 1921 Jefferson Davis Highway, Arlington, VA.

3. *Electronically*. Submit your comments and/or data electronically by e-mail to: opp-docket@epa.gov. Do not submit any information electronically that you consider to be CBI. Submit electronic comments as an ASCII file, avoiding the use of special characters and any form of encryption. Comments and data will also be accepted on standard computer disks in WordPerfect 5.1/6.1 or ASCII file format. All comments and data in electronic form must be identified by the docket control number. Electronic comments on this notice may also be filed online at many Federal Depository Libraries.

D. How Should I Handle CBI Information That I Want to Submit to the Agency?

You may claim information that you submit in response to this document as CBI by marking any part or all of that information as CBI. Information so marked will not be disclosed except in accordance with procedures set forth in 40 CFR part 2. A copy of the comment that does not contain CBI must be submitted for inclusion in the public record. Information not marked confidential will be included in the public docket by EPA without prior notice. If you have any questions about CBI or the procedures for claiming CBI, please call the Public Information and Records Integrity Branch telephone number is (703) 305–5805.

E. What Should I Consider As I Prepare My Comments for EPA?

EPA invites you to provide your views on the various draft science policy papers, new approaches we have not considered, the potential impacts of the various options (including possible unintended consequences), and any data or information that you would like the Agency to consider. You may find the following suggestions helpful for preparing your comments:

1. Explain your views as clearly as possible.

2. Describe any assumptions that you used.

3. Provide solid technical information and/or data to support your views.

4. If you estimate potential burden or costs, explain how you arrived at the estimate.

5. Indicate what you support, as well as what you disagree with.

6. Provide specific examples to illustrate your concerns.

7. Make sure to submit your comments by the deadline in this notice.

8. At the beginning of your comments (e.g., as part of the ''Subject'' heading), be sure to properly identify the document you are commenting on. You can do this by providing the docket control number assigned to the notice, along with the name, date, and **Federal Register** citation.

II. Background

On August 3, 1996, the Food Quality Protection Act of 1996 (FQPA) was signed into law. Effective upon signature, the FQPA significantly amended the Federal Insecticide, Fungicide, and Rodenticide Act (FIFRA) and the Federal Food, Drug, and Cosmetic Act (FFDCA). Among other changes, FQPA established a stringent health-based standard (''a reasonable certainty of no harm'') for pesticide residues in foods to assure protection from unacceptable pesticide exposure; provided heightened health protections for infants and children from pesticide risks; required expedited review of new, safer pesticides; created incentives for the development and maintenance of effective crop protection tools for farmers; required reassessment of existing tolerances over a 10-year period; and required periodic re-evaluation of pesticide registrations and tolerances to ensure that scientific data supporting pesticide registrations will remain up-to-date in the future.

Subsequently, the Agency established the Food Safety Advisory Committee (FSAC) as a subcommittee of the National Advisory Council for Environmental Policy and Technology (NACEPT) to assist in soliciting input from stakeholders and to provide input to EPA on some of the broad policy choices facing the Agency and on strategic direction for the Office of Pesticide Programs. The Agency has used the interim approaches developed through discussions with FSAC to make regulatory decisions that met FQPA's standard, but that could be revisited if additional information became available or as the science evolved. As EPA's approach to implementing the scientific provisions of FQPA has evolved, the Agency has sought independent review and public participation, often through presentation of many of the science policy issues to the FIFRA Scientific Advisory Panel (SAP), a group of independent, outside experts who provide peer review and scientific advice to Office of Pesticide Programs (OPP).

In addition, as directed by Vice President Albert Gore, EPA has been working with the U.S. Department of Agriculture (USDA) and another subcommittee of NACEPT, the Tolerance Reassessment Advisory Committee (TRAC), chaired by the EPA Deputy Administrator and the USDA Deputy Secretary, to address FQPA issues and implementation. TRAC comprises more than 50 representatives of affected user, producer, consumer, public health, environmental, states and other interested groups. The TRAC has met five times as a full committee from May 27 through September 16, 1998.

The Agency has been working with the TRAC to ensure that its science policies, risk assessments of individual pesticides, and process for decision making are transparent and open to public participation. An important product of these consultations with TRAC is the development of a framework for addressing key science policy issues. The Agency decided that the FQPA implementation process and related policies would benefit from initiating notice and comment on the major science policy issues.

The TRAC identified nine science policy issue areas they believe were key to implementation of FQPA and tolerance reassessment. The framework calls for EPA to provide one or more documents for comment on each of the nine issues by announcing their availability in the **Federal Register**.

In accordance with the framework described in a separate notice published in the **Federal Register** of October 29, 1998 (63 FR 58038) (FRL–6041–5), EPA has been issuing a series of draft documents concerning nine science policy issues identified by the TRAC related to the implementation of FQPA. This notice announces the availability of one of those draft documents as identified in Unit I.C. of this document.

III. Summary of Draft Paper

EPA is responsible for regulating the nature and amount of pesticide residues in food under FFDCA. FFDCA section 408 authorizes EPA to set a tolerance or an exemption from the requirement of a tolerance if the Agency determines that the residues would be ''safe.'' The Agency performs various types of risk assessments to evaluate the safety of pesticides in food, including analyses to determine the nature and the amounts of pesticides that people might be exposed to over a single day. This paper discusses how EPA applies the statutory safety standard to acute dietary risk assessments.

The Environmental Protection Agency's Office of Pesticide Programs has previously announced that, on an interim basis, it intends to regulate

pesticides at the 99.9th percentile of the distribution of estimated acute dietary exposures when probabilistic assessment techniques are used to model the distribution. EPA will compare this percentile of estimated exposure to the Population Adjusted Dose (PAD), a value that reflects an amount of a pesticide to which a person may safely be exposed in one day. This draft science policy paper describes OPP's interim policy, concerns that have been raised about it, associated public health issues, and OPP's plans for further evaluation and implementation. This policy has broad applicability to many pesticides and potentially significant impact on the assessment of these pesticides. Moreover, a number of concerns and issues have been raised about the policy. Therefore, the Agency is seeking public comment so that OPP policy is transparent and that the views of all interested parties are considered.

OPP's interim position with respect to assessing and regulating the food uses of pesticides, when using a probabilistic method of estimating acute dietary exposure, is as follows:

If the 99.9th percentile of acute dietary exposure (together with exposure from other non-dietary, non-occupational sources), as estimated by probabilistic (e.g., Monte Carlo) analysis, is *equal to or less than* the Population Adjusted Dose (PAD) for the pesticide, OPP will determine that the safety standard of FFDCA sec. 408(B)(2)(A) is met with respect to acute dietary risk. However, if the analysis indicates that exposure at the 99.9th percentile *exceeds* the PAD, OPP will conduct a sensitivity analysis to determine to what extent the estimated exposures at the high-end percentiles may be affected by unusually high food consumption or residue values. To the extent that one or a few values from the input data sets seem to ''drive'' the exposure estimates at the high end of exposure, OPP will consider whether these values are representative and should be used as the primary basis for regulatory decision making. The Office will also examine the consequence of removing such high-end food consumption or residue values when estimating the 99.9th percentile of exposure.

The first section of this paper provides an overview of OPP's present practice and interim policy for acute dietary risk assessment. It describes the statutory, regulatory and policy framework for this interim policy, as well as prior reviews and comments. In addition, this section provides background information on dietary risk assessment in general and explains how the previous system (DRES--Dietary Risk Evaluation System) and the current system (DEEM--Dietary Exposure Estimating Model) work, as well as what input data sources are used and how.

The second section addresses some of the specific issues and concerns raised about regulating at the 99.9th percentile. One issue is whether the nature of the databases available (i.e., robustness, adequacy, etc.) should preclude the use of the 99.9th percentile for regulatory purposes since some consider the uncertainties associated with this threshold of concern to be too great. Examples of data used are USDA's food consumption survey data, registrant crop field trials, USDA Pesticide Data Program (PDP) data, FDA monitoring data, market basket surveys, etc. Other issues include the treatment of data ''outliers,'' representativeness and adequacy of the databases, and the impact of Agency default values on exposure estimates. Concerns, therefore, exist about whether the estimates of the 99.9th percentile of exposure are sufficiently representative of actual exposure to be meaningful. This paper summarizes these concerns and invites comment on them.

The third section addresses the issue of protectiveness of the 99.9th percentile with respect to the general public health. One view is that regulating at the 99.9th percentile is insufficiently conservative because very large numbers of people could be exposed every day to pesticide intakes which are estimated to exceed the Agency's ''level of concern.'' This section also explores the contrary view that the interim policy is over-protective because of the conservative assumptions used in the estimation methods and the retention of potentially unrepresentative values in the data base. The section discusses as well as the view that, whether it over- or under-estimates actual exposure, the 99.9th percentile is simply too uncertain to be used in risk management decisions. This section also explains that OPP considers a number of factors in considering which percentile to use: The size of the exposed population and the proportion that might receive daily doses above the benchmark of safety, the aRfD; the level of confidence OPP has in its exposure estimates; and the extent to which such estimates may overstate potential exposure because they incorporate conservative assumptions or rely on atypical and unrealistic data. Further, to the extent understood, OPP considers by how much individual exposures would be estimated to exceed the aRfD. Finally, the OPP takes into account the degree of public health protection incorporated into the determination of the aRfD.

The fourth section addresses the areas in which OPP and USDA propose to collaborate in performing further exploratory analysis with the DEEM software and the 99.9th percentile issue.

The fifth and sixth sections list questions and issues on which the Agency would most like commenters to focus and respond, and provide a list of the documents referenced in this paper, respectively.

The Appendix, entitled ''Primer on Interpretation of Exposure Distribution Curves,'' is a ''plain English'' guide to Monte Carlo analysis and how to interpret results from it.

IV. Questions/Issues for Comment

While comments are invited on any aspect of the draft paper, EPA is particularly interested in comments on the following questions and issues.

1. What are the appropriate statistical techniques for characterizing the uncertainty at the high end of the distribution of probabilistic exposure assessments? At what point does an exposure estimate become so uncertain that it would be inappropriate to use the estimate in regulatory decision making? How does uncertainty about one or more high-end values in a data set affect the reliability of the output of probabilistic models using that data set as an input?

2. Regarding the Agency's current methodology for performing Monte Carlo analyses, at what percentile of estimated exposure is it appropriate for the Agency to establish its threshold of concern? 99.99th, 99.9th, 99th, 95th, or some other percentile? What are the reasons for recommending that percentile? How should the characteristics of the data sets used as input to the assessment (e.g., the type of residue data, field trials vs. PDP monitoring data) affect the choice of a percentile exposure for OPP's threshold of concern?

3. If OPP chooses to set its threshold of concern lower than the 99.9th percentile, should any other steps, such as the application of an additional safety factor, be employed to assure that the statutory safety standard is satisfied?

4. Some advocate a ''sliding regulatory scale'' with more serious toxic effects regulated at higher thresholds; they contend that such an approach would explicitly acknowledge all aspects of the risk management decision and incorporate the nature of the toxic effects and the built-in conservatism on the hazard identification and dose response side of the equation. Instead of regulating at only a single percentile for all toxicological effects (regardless of severity), should the Agency regulate pesticides at a variety of percentiles, depending upon the toxic effect

observed? For example, would a lower threshold of regulation (perhaps the 98th percentile) be warranted for fully-reversible effects (such as mild anemia) or would a more stringent threshold (perhaps the 99.9th percentile or higher) be justified for severe, non-reversible effects (e.g., birth defects)? Finally, should the Agency regulate pesticides at different percentiles according to the nature and size of the subpopulation groups (i.e., use the 99.9th percentile for larger groups and another percentile for smaller groups)?

5. How should ''outliers'' be identified for food consumption data sets? For residue data sets? When an ''outlier'' is identified, how should the data point be handled in generating probabilistic exposure estimates?

6. If OPP conducts a Critical Exposure Contribution (CEC) analysis, and excludes one or more data points because they appear to drive the high-end estimates of exposure, should OPP perform an additional CEC analysis on any revised estimate of the exposure distribution?

7. Should OPP's probabilistic assessments attempt to reflect variability in human sensitivity to toxic effects, as suggested by the FIFRA Scientific Advisory Panel? If so, how should this be done?

V. Policies Not Rules

The draft policy document discussed in this notice is intended to provide guidance to EPA personnel and decision-makers, and to the public. As a guidance document and not a rule, the policy in this guidance is not binding on either EPA or any outside parties. Although this guidance provides a starting point for EPA risk assessments, EPA will depart from its policy where the facts or circumstances warrant. In such cases, EPA will explain why a different course was taken. Similarly, outside parties remain free to assert that a policy is not appropriate for a specific pesticide or that the circumstances surrounding a specific risk assessment demonstrate that a policy should be abandoned.

EPA has stated in this notice that it will make available revised guidance after consideration of public comment. Public comment is not being solicited for the purpose of converting any policy document into a binding rule. EPA will not be codifying this policy in the Code of Federal Regulations. EPA is soliciting public comment so that it can make fully informed decisions regarding the content of each guidance document.

The ''revised'' guidance will not be unalterable. Once a ''revised'' guidance document is issued, EPA will continue to treat it as guidance, not a rule. Accordingly, on a case-by-case basis EPA will decide whether it is appropriate to depart from the guidance or to modify the overall approach in the guidance. In the course of inviting comment on each guidance document, EPA would welcome comments that specifically address how a guidance document can be structured so that it provides meaningful guidance without imposing binding requirements.

VI. Contents of Docket

Document that are referenced in this notice will be inserted in the docket under the docket control number ''OPP–00593.'' In addition, the documents referenced in the framework notice, which published in the **Federal Register** on October 29, 1998 (63 FR 58038) have also been inserted in the docket under docket control number OPP–00557.

List of Subjects

Environmental protection, Administrative practice and procedure, Agricultural commodities, pesticides and pests.

Dated: April 1, 1999.

Susan H. Wayland,

Acting Assistant Administrator for Prevention, Pesticides and Toxic Substances.

[FR Doc. 99–8636 Filed 4–6–99; 8:45 am]

BILLING CODE 6560–50–F

ENVIRONMENTAL PROTECTION AGENCY

[PF–867; FRL–6069–8]

AgrEvo USA Company; Cry9C Plant-Pesticides; Notice of Filing of Pesticide Petition

AGENCY: Environmental Protection Agency (EPA).

ACTION: Notice.

SUMMARY: This notice announces the initial filing of a pesticide petition proposing the amendment of a regulation to exempt from the requirement of a tolerance residues of plant-pesticides *Bacillus thuringiensis* subsp. *tolworthi* Cry9C and the genetic material necessary for the production of this protein in or on all raw agricultural commodities.

DATES: Comments, identified by the docket control number PF–867, must be received on or before May 7, 1999.

ADDRESSES: By mail submit written comments to: Information and Records Integrity Branch, Public Information and Services Divison (7502C), Office of Pesticides Programs, Environmental Protection Agency, 401 M St., SW., Washington, DC 20460. In person bring comments to: Rm. 119, CM #2, 1921 Jefferson Davis Highway, Arlington, VA.

Comments and data may also be submitted electronically by following the instructions under ''SUPPLEMENTARY INFORMATION.'' No confidential business information should be submitted through e-mail.

Information submitted as a comment concerning this document may be claimed confidential by marking any part or all of that information as ''Confidential Business Information'' (CBI). CBI should not be submitted through e-mail. Information marked as CBI will not be disclosed except in accordance with procedures set forth in 40 CFR part 2. A copy of the comment that does not contain CBI must be submitted for inclusion in the public record. Information not marked confidential may be disclosed publicly by EPA without prior notice. All written comments will be available for public inspection in Rm. 119 at the address given above, from 8:30 a.m. to 4 p.m., Monday through Friday, excluding legal holidays.

FOR FURTHER INFORMATION CONTACT: By mail: Mike Mendelsohn, Regulatory Action Leader, Biopesticides and Pollution Prevention Division, (7511C), Office of Pesticide Programs, Environmental Protection Agency, 401 M St., SW., Washington, DC 20460. Office location and telephone number: Rm. 9th floor, Crystal Mall #2, 1921 Jefferson Davis Hwy., Arlington, VA. 22202, telephone (703) 308–8715; e-mail:mendelsohn.mike@epamail.epa.gov.

SUPPLEMENTARY INFORMATION: EPA has received a pesticide petition as follows proposing the establishment and/or amendment of regulations for residues of a certain pesticide chemical in or on all raw agricultural commodities under section 408 of the Federal Food, Drug, and Comestic Act (FFDCA), 21 U.S.C. 346a. EPA has determined that this petition contain data or information regarding the elements set forth in section 408(d)(2); however, EPA has not fully evaluated the sufficiency of the submitted data at this time or whether the data supports granting of the petition. Additional data may be needed before EPA rules on the petition.

The official record for this notice, as well as the public version, has been established for this notice of filing under docket control number PF–867 (including comments and data submitted electronically as described below). A public version of this record, including printed, paper versions of electronic comments, which does not

include any information claimed as CBI, is available for inspection from 8:30 a.m. to 4 p.m., Monday through Friday, excluding legal holidays. The official record is located at the address in ''ADDRESSES'' at the beginning of this document.

Electronic comments can be sent directly to EPA at:

opp-docket@epamail.epa.gov

Electronic comments must be submitted as an ASCII file avoiding the use of special characters and any form of encryption. Comment and data will also be accepted on disks in Wordperfect 5.1 file format or ASCII file format. All comments and data in electronic form must be identified by the docket control number (insert docket number) and appropriate petition number. Electronic comments on this notice may be filed online at many Federal Depository Libraries.

Authority: 21 U.S.C. 346a.

List of Subjects

Environmental protection, Agricultural commodities, Food additives, Feed additives, Pesticides and pests, Reporting and recordkeeping requirements.

Dated: March 24, 1999.

Janet L. Andersen,

Director, Biopesticides and Pollution Prevention Division, Office of Pesticide Programs.

Petition Summary

Below a summary of the pesticide petition is printed. The summary of the petition was prepared by the petitioner. The petition summary announces the availability of a description of the analytical methods available to EPA for the detection and measurement of the pesticide chemical residues or an explanation of why no such method is needed.

AgrEvo USA Company

9F5050

EPA has received a pesticide petition 9F5050 from AgrEvo USA Company, Little Centre One, 2711 Centerville Rd., Wilmington, DE 19808, proposing the amendment of 40 CFR 180.1192 to exempt from the requirement of a tolerance residues of the plant-pesticides *Bacillus thuringiensis* subspecies *toliworthi* Cry9C protein and the genetic material necessary for the production of this protein in or on all raw plant agricultural commodities under section 408 of the Federal Food, Drug, and Comestic Act (FFDCA), 21 U.S.C. 346a(d).

Pursuant to section 408(d)(2)(A)(i) of the FFDCA, as amended, AgrEvo USA Company has submitted the following summary of information, data, and arguments in support of their pesticide petition. This summary was prepared by AgrEvo USA Company and EPA has not fully evaluated the merits of the pesticide petition. The summary may have been edited by EPA if the terminology used was unclear, the summary contained extraneous material, or the summary unintentionally made the reader conclude that the findings reflected EPA's position and not the position of the petitioner.

A. Product Name and Proposed Use Practices

Corn plants have been protected from lepidopteran insect pests such as European corn borer [*Ostrinia nubilalis* (Huber)], by expressing a Cry9C protein. The Cry9C protein expressed by the corn plants corresponds to the insecticidal moiety of the Cry9C crystal protein of a *Bacillus thuringiensis* subsp. *tolworthi* strain. The Cry9C protein poses no foreseeable risks to non-target organisms, including mammals, birds and non-target insects. Transgenic corn plants, expressing Cry9C protein, represents an excellent addition to growers' options for insect control that reduces or eliminates the need for chemical inputs and fits well within an integrated pest management program.

B. Product Identity/Chemistry

The *cry9C* gene, was isolated from the *B.t. tolworthi* strain, truncated and modified before it was stably inserted into corn plants. The tryptic core of the microbially produced Cry9C delta-endotoxin is similar to the Cry9C protein found in event CBH-351. The Cry9C protein was produced and purified from a bacterial host, for the purposes of mammalian toxicity studies. Product analysis that compared the Cry9C protein from the two sources included: SDS-PAGE, Western blots, N-terminal amino acid sequencing, glycosylation tests (for possible post-translational modifications) and insect bioassays.

No analytical method is included since this petition requests an exemption from the requirement of a tolerance.

C. Mammalian Toxicological Profile

Bacillus thuringiensis proteins have insecticidal properties and have been used commercially for more than 30 years. This long history of safe use is the primary reason that *Bt* proteins have been chosen as the basis for the first insecticidal plants produced by biotechnology. *Bt* mode-of-action can be divided into a series of critical steps: ingestion by the insect, specific binding to brush border membrane receptors, membrane insertion, and pore formation. *Bt* proteins do not bind or cause any other effects to mammalian gut membranes thereby displaying human safety properties. The Cry9C protein mode-of-action is apparently similar to that of the well known Cry1A proteins. Although *Bt* strains have been used for decades as sprayable microbial products, no confirmed cases of allergic reactions have been documented, despite dermal, oral and inhalation exposures. A reference to this is made by the EPA in a FR notice, dated August 16, 1995, (60 FR 42443)(FRL–4971–3).

In addition to the safe history of *Bt* proteins outlined above, several other studies were performed to provide evidence for mammalian safety of the Cry9C protein. An acute toxicological study was performed with mice, which demonstrated that the Cry9C protein had an LD_{50} >3,760 mg/kg. A test for *in vitro* digestibility under simulated gastric conditions showed that the Cry9C protein found in bacteria and the protein produced in plants was stable for 4 hours when exposed to simulated gastric juice. An amino acid sequence homology search performed using three different data banks (against 135,867 sequences) only found homology to other related *Bt* proteins. All other proteins in the data bank have no major stretches of sequence homology, indicating that the sequence homology is not significant. Therefore, no homology with any known allergen or protein toxin could be demonstrated.

The Cry9C protein or metabolites of the protein are not expected to interact with the immune system, the endocrine system or to have any carcinogenic activity since the protein sequence does not match any known allergens, hormones or since proteins, in general, are not known to be carcinogenic.

All living organisms contain DNA and there are no examples of nucleic acids causing any toxicological effects from dietary consumption. The genetic material necessary for the production of the Cry9C protein in plants includes the genetic construct that encodes the Cry9C protein and all other necessary genetic elements for it's expression. These elements include: a promotor, polylinker sequences, leader sequences and terminators and none of which are expected to cause any toxicological effects.

Taken together, the data supports the lack of mammalian toxicological effects

for the plant-pesticide *Bacillus thuringiensis* subsp. *tolworthi* Cry9C protein and the genetic material necessary for the production of this protein in or on all raw plant agricultural commodities.

D. Aggregate Exposure

Since the Cry9C protein is expressed in plant tissues, dermal or inhalation will be negligible to non-existent. Drinking water is unlikely to be contaminated with Cry9C protein due to the rapid degradation of plant materials in the soil. Processed plant products may allow for low levels of exposure to the Cry9C protein, but the lack of mammalian toxicity and the lack of sequence homology to known toxins or allergens, has already been demonstrated.

E. Cumulative Exposure

The unique mode-of-action of *Bt* proteins in general, coupled with the lack of mammalian toxicity for the Cry9C protein provides no basis for the expectation of cumulative exposure with other compounds.

F. Safety Determination

Bt microbial pesticides containing Cry proteins have been applied for more than 30 years to food and feed crops consumed by the U.S. population. There have been no human safety problems attributed to Cry proteins. The extensive mammalian toxicity studies performed to support the safety of *Bacillus thuringiensis* - containing pesticides clearly demonstrate that the tested isolates are not toxic or pathogenic (McClintock, et al., 1995, Pestic. Sci. 45:95-105). The lack of mammalian toxicity or allergenic properties of the Cry9C protein provides support for our request of an exemption from the requirement of a tolerance set forth in this petition. Non-dietary exposure of infants, children or the US population in general, to the Cry9C protein expressed in plant materials, are not expected due to the uses of this product within agricultural settings.

G. Existing Tolerances

An exemption from the requirement of a tolerance for residues of the insecticide, *Bacillus thuringiensis* subspecies *tolworthi* Cry9C protein and the genetic material necessary for its production in corn for feed use only; as well as in meat, poultry, milk, or eggs resulting from animals fed such feed was issued on May 22, 1998.

[FR Doc. 99–8260 Filed 4–6–99; 8:45 am]

BILLING CODE 6560–50–F

ENVIRONMENTAL PROTECTION AGENCY

[OPP–50857; FRL–6074–1]

Issuance of an Experimental Use Permit

AGENCY: Environmental Protection Agency (EPA).

ACTION: Notice.

SUMMARY: EPA has granted an experimental use permit (EUP) to the following applicant. The permit is in accordance with, and subject to, the provisions of 40 CFR part l72, which defines EPA procedures with respect to the use of pesticides for experimental use purposes.

FOR FURTHER INFORMATION CONTACT: By mail: Maria Rodriguez, Registration Division (7505C), Office of Pesticide Programs, Environmental Protection Agency, 401 M St., SW., Washington, DC 20460. Office location, telephone number, and e-mail address: 1921 Jefferson Davis Highway, Rm. 251, CM #2, Arlington, VA, 703–305–6710, e-mail: rodriguez.maria@epa.gov.

SUPPLEMENTARY INFORMATION: EPA has issued the following EUP:

59981–EUP–1. Issuance. Fleming Laboratories, Inc., P.O. Box 34384, Charlotte, NC 28234. This experimental use permit allows the use of 313 pounds of the plant growth regulator (4-aminophenyl) arsonic acid on 50 acres of grapefruit to evaluate enhancement of ripening. The program is authorized only in the State of Florida. The experimental use permit is effective from February 28, 1999 to February 28, 2001. A tolerance has been established for residues of the active ingredient in or on grapefruit.

Persons wishing to review this EUP are referred to the designated contact person. Inquires concerning this permit should be directed to the person cited above. It is suggested that interested persons call before visiting the EPA office, so that the appropriate file may be made available for inspection purposes from 8 a.m. to 4 p.m., Monday through Friday, excluding legal holidays.

Authority: 7 U.S.C. 136.

List of Subjects

Environmental protection, Experimental use permits.

Dated: March 30, 1999.

James Jones,

Director, Registration Division, Office of Pesticide Programs.

[FR Doc. 99–8634 Filed 4–6–99; 8:45 am]

BILLING CODE 6560–50–F

ENVIRONMENTAL PROTECTION AGENCY

[OPP–00591; FRL–6071–1]

Pesticides; Policy Issues Related to the Food Quality Protection Act

AGENCY: Environmental Protection Agency (EPA).

ACTION: Notice of availability.

SUMMARY: To assure that EPA's policies related to implementing the Food Quality Protection Act (FQPA) are transparent and open to public participation, EPA is soliciting comments on a draft policy paper entitled ''Data for Refining Anticipated Residue Estimates Used in Dietary Risk Assessments for Organophosphate Pesticides.'' This notice is the sixth in a series concerning science policy documents related to FQPA and developed through the Tolerance Reassessment Advisory Committee (TRAC).

DATES: Submit written comments for this policy paper, identified by docket control number OPP–00591, on or before June 7, 1999.

ADDRESSES: Comments may be submitted by mail, electronically, or in person. Please follow the detailed instructions for each method as provided in Unit I.C. of the ''SUPPLEMENTARY INFORMATION'' section of this document.

FOR FURTHER INFORMATION CONTACT: Margaret Rice, Environmental Protection Agency (7508), 401 M St., SW., Washington, DC 20460; telephone number: (703) 308–8039; fax: 703–308–8041; e-mail: rice.margaret@epa.gov.

SUPPLEMENTARY INFORMATION:

I. General Information

A. Does This Notice Apply to Me?

You may be potentially affected by this notice if you manufacture or formulate pesticides. Potentially affected categories and entities may include, but are not limited to:

Categories	NAICS	Examples of potentially affected entities
Pesticide producers	32532	Pesticide manufacturers Pesticide formulators

This listing is not intended to be exhaustive, but rather provides a guide for readers regarding entities likely to be affected by this action. Other types of entities not listed could also be affected. If available, the North American Industrial Classification System (NAICS) codes have been provided to assist you and others in determining whether or not this notice affects certain entities. If you have any questions regarding the applicability of this announcement to you, consult the technical person listed in the ''FOR FURTHER INFORMATION CONTACT'' section of this document.

B. How Can I Get Additional Information or Copies of This Document or Other Documents?

1. *Electronically*. You may obtain electronic copies of this document and the science policy paper at http://www.epa.gov/pesticides/. On the Office of Pesticide Program Home Page select ''TRAC'' and then look up the entry for this document. You can also go directly to the listings at the EPA Home Page at the **Federal Register** -- Environmental Documents entry for this document under ''Laws and Regulations'' (http://www.epa.gov/fedrgstr/) to obtain this notice and the science policy paper.

2. *Fax on Demand*. You may request to receive a faxed copy of this document, as well as supporting information, by using a faxphone to call (202) 401–0527 and selecting item 6033. You may also follow the automated menu.

3. *In person or by phone*. If you have any questions or need additional information about this action, you may contact the person identified in the ''FOR FURTHER INFORMATION CONTACT'' section of this document. In addition, the official record for the science policy paper listed in the ''SUMMARY'' section of this document, including the public version, has been established under docket control number OPP–00591 (including comments and data submitted electronically as described below). A public version of each record, including printed, paper versions of any electronic comments, which does not include any information claimed as Confidential Business Information (CBI), is available for inspection in Rm. 119, Crystal Mall #2, 1921 Jefferson Davis Highway, Arlington, VA, from 8:30 a.m. to 4 p.m., Monday through Friday, excluding legal holidays. The Public Information and Records Integrity Branch telephone number is (703) 305–5805.

C. How and to Whom Do I Submit Comments?

You may submit comments through the mail, in person, or electronically. Be sure to include docket control number OPP–00591 in your correspondence.

1. *By mail*. Submit written comments to: Public Information and Records Integrity Branch, Information Resources and Services Division (7502C), Office of Pesticide Programs, Environmental Protection Agency, 401 M St., SW., Washington, DC 20460.

2. *In person or by courier*. Deliver written comments to: Public Information and Records Integrity Branch, Information Resources and Services Division (7502C), Office of Pesticide Programs, Environmental Protection Agency, Rm. 119, Crystal Mall #2, 1921 Jefferson Davis Highway, Arlington, VA.

3. *Electronically*. Submit your comments and/or data electronically by e-mail to: opp-docket@epa.gov. Do not submit any information electronically that you consider to be CBI. Submit electronic comments as an ASCII file, avoiding the use of special characters and any form of encryption. Comments and data will also be accepted on standard computer disks in WordPerfect 5.1/6.1 or ASCII file format. All comments and data in electronic form must be identified by the docket control number. Electronic comments on this notice may also be filed online at many Federal Depository Libraries.

D. How Should I Handle CBI Information That I Want to Submit to the Agency?

You may claim information that you submit in response to this document as CBI by marking any part or all of that information as CBI. Information so marked will not be disclosed except in accordance with procedures set forth in 40 CFR part 2. A copy of the comment that does not contain CBI must be submitted for inclusion in the public record. Information not marked confidential will be included in the public docket by EPA without prior notice. If you have any questions about CBI or the procedures for claiming CBI, please call the Public Information and Records Integrity Branch telephone number is (703) 305–5805.

E. What Should I Consider As I Prepare My Comments for EPA?

EPA invites you to provide your views on the various draft science policy papers, new approaches we have not considered, the potential impacts of the various options (including possible unintended consequences), and any data or information that you would like the Agency to consider. You may find the following suggestions helpful for preparing your comments:

1. Explain your views as clearly as possible.
2. Describe any assumptions that you used.
3. Provide solid technical information and/or data to support your views.
4. If you estimate potential burden or costs, explain how you arrived at the estimate.
5. Indicate what you support, as well as what you disagree with.
6. Provide specific examples to illustrate your concerns.
7. Make sure to submit your comments by the deadline in this notice.
8. At the beginning of your comments (e.g., as part of the ''Subject'' heading), be sure to properly identify the document you are commenting on. You can do this by providing the docket control number assigned to the notice, along with the name, date and **Federal Register** citation.

II. Background

On August 3, 1996, the Food Quality Protection Act of 1996 (FQPA) was signed into law. Effective upon signature, the FQPA significantly amended the Federal Insecticide, Fungicide, and Rodenticide Act (FIFRA) and the Federal Food, Drug, and Cosmetic Act (FFDCA). Among other changes, FQPA established a stringent health-based standard (''a reasonable certainty of no harm'') for pesticide residues in foods to assure protection from unacceptable pesticide exposure; provided heightened health protections for infants and children from pesticide risks; required expedited review of new, safer pesticides; created incentives for the development and maintenance of effective crop protection tools for farmers; required reassessment of existing tolerances over a 10-year period; and required periodic re-evaluation of pesticide registrations and tolerances to ensure that scientific data supporting pesticide registrations will remain up-to-date in the future. Subsequently, the Agency established the Food Safety Advisory Committee (FSAC) as a subcommittee of the National Advisory Council for

Environmental Policy and Technology (NACEPT) to assist in soliciting input from stakeholders and to provide input to EPA on some of the broad policy choices facing the Agency and on strategic direction for the Office of Pesticide Programs. The Agency has used the interim approaches developed through discussions with FSAC to make regulatory decisions that met FQPA's standard, but that could be revisited if additional information became available or as the science evolved. As EPA's approach to implementing the scientific provisions of FQPA has evolved, the Agency has sought independent review and public participation, often through presentation of many of the science policy issues to the FIFRA Scientific Advisory Panel (SAP), a group of independent, outside experts who provide peer review and scientific advice to OPP.

In addition, as directed by Vice President Albert Gore, EPA has been working with the U.S. Department of Agriculture (USDA) and another subcommittee of NACEPT, the Tolerance Reassessment Advisory Committee (TRAC), chaired by the EPA Deputy Administrator and the USDA Deputy Secretary, to address FQPA issues and implementation. TRAC comprises more than 50 representatives of affected user, producer, consumer, public health, environmental, States, and other interested groups. The TRAC has met five times as a full committee from May 27 through September 16, 1998.

The Agency has been working with the TRAC to ensure that its science policies, risk assessments of individual pesticides, and process for decision making are transparent and open to public participation. An important product of these consultations with TRAC is the development of a framework for addressing key science policy issues. The Agency decided that the FQPA implementation process and related policies would benefit from initiating notice and comment on the major science policy issues.

The TRAC identified nine science policy issue areas they believe were key to implementation of FQPA and tolerance reassessment. The framework calls for EPA to provide one or more documents for comment on each of the nine issues by announcing their availability in the **Federal Register**.

In accordance with the framework described in a separate notice published in the **Federal Register** of October 29, 1998 (63 FR 58038) (FRL–6041–5), EPA has been issuing a series of draft documents concerning nine science policy issues identified by the TRAC related to the implementation of FQPA. In addition to the nine science policy issues, the Agency has decided to make available other policy documents which are related to the implementation of FQPA, but which are not purely science policy issues. This notice announces the availability of one of those draft documents as identified in Unit I.C. of this document.

III. Summary of Draft Paper

The Food Quality Protection Act (FQPA) of 1996 requires EPA to reassess all existing tolerances, based on available information, according to new, more stringent standards. Among these new standards are specific determinations regarding the potential for increased sensitivity of infants, children, and other subpopulations to the pesticide, assessment of the potential for aggregate exposures from various sources (such as the diet, drinking water, and pesticide uses in and around the home) and cumulative assessments of pesticides with a common mechanism of toxicity. EPA anticipates that refinements, beyond those routinely applied to EPA's dietary exposure assessments, will be key to developing more realistic estimates of the actual residues on food as EPA proceeds through the aggregate and particularly the cumulative assessment of pesticides which have a similar toxic effect via a common mechanism of toxicity, for example, the organophosphates (OPs). Having more realistic estimates of residues ultimately improves the Agency's ability to make informed regulatory decisions that fully protect public health and sensitive subpopulations, including infants and children.

This document describes the types of data that can be used to refine residue estimates, outlines the basic characteristics of useful data, discusses how residue data and usage data are linked, and explains how EPA will use these types of data in its dietary exposure assessments. Bridging studies, which are used to quantify the difference in residues resulting from various application rates, are described in some detail. Also discussed are:

1. Residue decline studies, which can be used to quantify the differences in residues resulting from various pre-harvest intervals (PHIs).
2. Residue degradation studies, which characterize the decreasing amounts of residues over time.
3. Cooking and processing data.
4. Market basket data.
5. Data to quantify residues in meat and milk after cooking and pasteurization.

Finally, interested parties may provide existing and available data of the types described in this document to EPA. The practical experience of working with existing data will enable the Agency to refine both current assessments and the guidance that is being developed for conducting new studies.

IV. Questions/Issues for Comment

While comments are invited on any aspect of the draft policy paper, EPA is particularly interested in comments on the following questions and issues.

1. EPA proposes to review existing bridging, residue decline and other data and to develop guidance for conducting these kinds of studies. The purpose of these multi-rate, multi-PHI studies is to be able to use the full range of expected residue values (based on the full range of application rates and PHIs) in dietary exposure assessments and thereby produce more realistic estimates of dietary risk. Is this a reasonable and efficient approach? What other approaches should EPA consider?

2. EPA believes that between one and three field trials conducted at different locations (with three different application rates at each field trial and three independent samples collected at each rate or PHI) are needed to demonstrate the mathematical relationship between application rate or PHI and amount of residue. Is this sampling regime adequate to characterize the range of potential residues?

3. In developing its guidance, EPA has assumed that the relationship between application rates and/or PHIs and resulting residue levels is not necessarily the same for all chemicals. Is there any information available to suggest that this assumption is incorrect? Is there any information available to suggest that the relationship between application rates and/or PHIs and resulting residue levels for the organophosphates as a class may be similar?

4. EPA is willing to consider data on the prevalence of food processing practices, along with data to quantify residue reductions from such practices. Should information on the extent of food processing practices be validated? If so, how could this be accomplished?

V. Policies Not Rules

The draft policy document discussed in this notice is intended to provide guidance to EPA personnel and decision-makers, and to the public. As a guidance document and not a rule, the policy in this guidance is not binding on either EPA or any outside parties.

Although this guidance provides a starting point for EPA risk assessments, EPA will depart from its policy where the facts or circumstances warrant. In such cases, EPA will explain why a different course was taken. Similarly, outside parties remain free to assert that a policy is not appropriate for a specific pesticide or that the circumstances surrounding a specific risk assessment demonstrate that a policy should be abandoned.

EPA has stated in this notice that it will make available revised guidance after consideration of public comment. Public comment is not being solicited for the purpose of converting any policy document into a binding rule. EPA will not be codifying this policy in the Code of Federal Regulations. EPA is soliciting public comment so that it can make fully informed decisions regarding the content of each guidance document.

The ''revised'' guidance will not be unalterable. Once a ''revised'' guidance document is issued, EPA will continue to treat it as guidance, not a rule. Accordingly, on a case-by-case basis EPA will decide whether it is appropriate to depart from the guidance or to modify the overall approach in the guidance. In the course of inviting comment on each guidance document, EPA would welcome comments that specifically address how a guidance document can be structured so that it provides meaningful guidance without imposing binding requirements.

VI. Contents of Docket

Documents that are referenced in this notice will be inserted in the docket under the docket control number OPP–00591. In addition, the documents referenced in the framework notice, which published in the **Federal Register** on October 29, 1998 (63 FR 58038) have also been inserted in the docket under docket control number OPP–00557.

List of Subjects

Environmental protection, Administrative practice and procedure, Agricultural commodities, pesticides and pests.

Dated: March 26, 1999.

Marylouise M. Uhlig,

Acting Assistant Administrator for Prevention, Pesticides and Toxic Substances.

[FR Doc. 99–8259 Filed 4–6–99; 8:45 am]

BILLING CODE 6560–50–F

EXECUTIVE OFFICE OF THE PRESIDENT, OFFICE OF NATIONAL DRUG CONTROL POLICY

The Drug Free Communities Advisory Commission: Notice of Meeting

SUMMARY: In accordance with the Drug-Free Communities Act, the second meeting of the Drug Free Communities Advisory Commission will be held on April 27, 1999 in the 5th floor conference room of the Office of National Drug Control Policy, located at 750 17th Street NW, Washington, D.C. 20530. The meeting will commence at 8:30 AM, break for lunch at 12:00 PM and resume at 1:00 PM for the afternoon session. The agenda will include a discussion on grantee activities, future grant awards, the status of training and technical assistance and an update on program evaluation. There will be an opportunity for public comment from 4:30 PM until 5:00 PM.

FOR FURTHER INFORMATION: Please direct any questions to Edward Jurith, General Counsel, (202) 395–6709, Office of National Drug Policy, Executive Office of the President, Washington, D.C. 20503.

Signed at Washington, D.C. this 24th day of March, 1999.

Edward H. Jurith,

General Counsel.

[FR Doc. 99–8538 Filed 4–6–99; 8:45 am]

BILLING CODE 3115–01–P

FEDERAL COMMUNICATIONS COMMISSION

Technological Advisory Council

AGENCY: Federal Communications Commission.

ACTION: Notice.

SUMMARY: The Federal Communications Commission has established an Advisory Committee, called the Technological Advisory Council (''the Council''), to advise the Commission on advances in technology that have resulted in innovations in how telecommunications services are provided to, and are accessed by, users of those services. Many of these advances are increasing the rate of convergence among categories of services that have traditionally been viewed as distinct, such as cable television services, telephony, data services, and internet services. Regulations must be examined in light of these technology advances, and the Federal Communications Commission (''FCC'') must remain abreast of new developments in technology so that it can effectively fulfill its responsibilities under the Communications Act.

SUPPLEMENTARY INFORMATION: The purpose of the Council is to provide technical advice to the FCC and to make recommendations on the issues and questions presented to it by the FCC. The Council will address questions referred to it by the FCC Chairman, or by the FCC Chief Technologist or Chief Engineer. The questions referred to the Council will be directed to technical issues in the field of communications.

In order to ensure a balanced membership on the Council, the Commission will carefully select members on the basis of their technical knowledge. Members will be selected to balance the expertise and viewpoints that are necessary to address effectively the new technology issues that will be referred to the Council. Members will be recognized experts in their fields and, for private sector companies, individuals who hold technical executive positions such as Chief Technical Officer or Senior Technical Manager. The members will be chosen so that the largest possible diversity of interests, given the function to be performed, will be represented.

The formation of this Advisory Committee is in the public interest and is necessary to enable the FCC to perform its regulatory functions in light of technological advances in telecommunications. The Council's Charter has been filed in accordance with the requirements of the Federal Advisory Committee Act, Pub. L. 92–463, as amended.

FOR FURTHER INFORMATION CONTACT: Contact Stagg Newman at snewman@fcc.gov or 202–418–2478.

Federal Communications Commission.

Magalie Roman Salas,

Secretary.

[FR Doc. 99–8578 Filed 4–6–99; 8:45 am]

BILLING CODE 6712–01–P

FEDERAL COMMUNICATIONS COMMISSION

Technological Advisory Council

AGENCY: Federal Communications Commission.

ACTION: Notice of public meeting.

SUMMARY: In accordance with the Federal Advisory Committee Act, Pub. L. 92–463, as amended, this notice advises interested persons of the first meeting of the Technological Advisory Council (''Council''), which will be held at the Federal Communications Commission in Washington, DC.

DATES: Friday, April 30, 1999 at 10:00 a.m.

ADDRESSES: Federal Communications Commission, 445 12th St. S.W., Room TW–C305, Washington DC 20554.

SUPPLEMENTARY INFORMATION: The Council was established by the Federal Communications Commission to provide a means by which a diverse array of recognized technical experts from a variety of interests such as industry, academia, government, citizens groups, etc., can provide advice to the FCC on innovation in the communications industry. The purpose of this first meeting will be to organize the Council's efforts to fulfill its obligations under the charter.

Members of the general public may attend the meeting. The Federal Communications Commission will attempt to accommodate as many persons as possible. However, admittance will be limited to the seating available. There will be no public oral participation, but the public may submit written comments to Stagg Newman, the Council's Designated Federal Officer, before the meeting.

FOR FURTHER INFORMATION CONTACT: Contact Stagg Newman at snewman@fcc.gov or 202–418–2478.

Federal Communications Commission.

Magalie Roman Salas,

Secretary.

[FR Doc. 99–8579 Filed 4–6–99; 8:45 am]

BILLING CODE 6712–01–P

FEDERAL RESERVE SYSTEM

Change in Bank Control Notices; Acquisitions of Shares of Banks or Bank Holding Companies

The notificants listed below have applied under the Change in Bank Control Act (12 U.S.C. 1817(j)) and § 225.41 of the Board's Regulation Y (12 CFR 225.41) to acquire a bank or bank holding company. The factors that are considered in acting on the notices are set forth in paragraph 7 of the Act (12 U.S.C. 1817(j)(7)).

The notices are available for immediate inspection at the Federal Reserve Bank indicated. The notices also will be available for inspection at the offices of the Board of Governors. Interested persons may express their views in writing to the Reserve Bank indicated for that notice or to the offices of the Board of Governors. Comments must be received not later than April 21, 1999.

A. Federal Reserve Bank of Dallas (W. Arthur Tribble, Vice President) 2200 North Pearl Street, Dallas, Texas 75201-2272:

1. Phillip George Newsom, Ennis, Texas; to acquire additional voting shares of Palmer Bancshares, Inc., Palmer, Texas, and thereby indirectly acquire Commercial State Bank, Palmer, Texas.

Board of Governors of the Federal Reserve System, April 1, 1999.

Jennifer J. Johnson,

Secretary of the Board.

[FR Doc. 99–8545 Filed 4–6–99; 8:45 am]

BILLING CODE 6210–01–F

FEDERAL RESERVE SYSTEM

Formations of, Acquisitions by, and Mergers of Bank Holding Companies

The companies listed in this notice have applied to the Board for approval, pursuant to the Bank Holding Company Act of 1956 (12 U.S.C. 1841 *et seq.*) (BHC Act), Regulation Y (12 CFR Part 225), and all other applicable statutes and regulations to become a bank holding company and/or to acquire the assets or the ownership of, control of, or the power to vote shares of a bank or bank holding company and all of the banks and nonbanking companies owned by the bank holding company, including the companies listed below.

The applications listed below, as well as other related filings required by the Board, are available for immediate inspection at the Federal Reserve Bank indicated. The application also will be available for inspection at the offices of the Board of Governors. Interested persons may express their views in writing on the standards enumerated in the BHC Act (12 U.S.C. 1842(c)). If the proposal also involves the acquisition of a nonbanking company, the review also includes whether the acquisition of the nonbanking company complies with the standards in section 4 of the BHC Act. Unless otherwise noted, nonbanking activities will be conducted throughout the United States.

Unless otherwise noted, comments regarding each of these applications must be received at the Reserve Bank indicated or the offices of the Board of Governors not later than April 30, 1999.

A. Federal Reserve Bank of New York (Betsy Buttrill White, Senior Vice President) 33 Liberty Street, New York, New York 10045-0001:

1. Oswego County and Oswego County Bancorp, both of Oswego, New York; to become bank holding companies by acquiring Oswego County Savings Bank, Oswego, New York.

B. Federal Reserve Bank of Atlanta (Lois Berthaume, Vice President) 104 Marietta Street, N.W., Atlanta, Georgia 30303-2713:

1. Centon Bancorp, Inc., Richton, Mississippi; to become a bank holding company by acquiring 100 percent of the voting shares of Richton Bank and Trust Company, Richton, Mississippi.

Board of Governors of the Federal Reserve System, April 1, 1999.

Jennifer J. Johnson,

Secretary of the Board.

[FR Doc. 99–8544 Filed 4–6–99; 8:45 am]

BILLING CODE 6210–01–F

FEDERAL RESERVE SYSTEM

Sunshine Act Meeting

AGENCY HOLDING THE MEETING: Board of Governors of the Federal Reserve System.

TIME AND DATE: 11:00 a.m., Monday, April 12, 1999.

PLACE: Marriner S. Eccles Federal Reserve Board Building, 20th and C Streets, NW, Washington, DC 20551.

STATUS: Closed.

MATTERS TO BE CONSIDERED:

1. Consideration of various alternative work arrangements at the Federal Reserve Board.

2. Personnel actions (appointments, promotions, assignments, reassignments, and salary actions) involving individual Federal Reserve System employees.

3. Any items carried forward from a previously announced meeting.

CONTACT PERSON FOR MORE INFORMATION: Lynn S. Fox, Assistant to the Board; 202–452–3204.

SUPPLEMENTARY INFORMATION: You may call 202–452–3206 beginning at approximately 5 p.m. two business days before the meeting for a recorded announcement of bank and bank holding company applications scheduled for the meeting; or you may contact the Board's Web site at http://www.federalreserve.gov for an electronic announcement that not only lists applications, but also indicates procedural and other information about the meeting.

Dated: April 2, 1999.

Jennifer J. Johnson,

Secretary of the Board.

[FR Doc. 99–8649 Filed 4–2–99; 4:26 pm]

BILLING CODE 6210–01–P

GENERAL SERVICES ADMINISTRATION

Environmental Assessment and Finding of No Significant Impact for Construction of GSA Federal Laboratories, Prince George's County, Maryland

Reply to the Attention of: Dawud Abdur-Rahman, National Capital Region, General Services Administration, 7th and D Sts., SW., Washington, DC 20407

All comments must be received by April 13, 1999.

The General Services Administration will publish a Final Environmental Assessment and Finding of No Significant Impact (FONSI) on Friday, March 12, 1999 for Construction of Federal Laboratories in Beltsville, Maryland. The Final EA will be available for public review and comment at the Beltsville Library, 4319 Sellman Road, Beltsville, Maryland 20705.

The General Services Administration (GSA), acting as development manager for Federal facilities, proposes to construct and operate Federal Laboratories in Prince George's County, Maryland. The proposed action would consist of the construction a 150,000 gross square foot (gsf) (13,935 gross square meters) National Laboratory and a 50,000 gsf (4,645 gross square meters) Fire Investigation, Research, and Education (F.I.R.E.) Center. The facilities would employ approximately 152 people.

The new facilities would improve administrative and operational efficiency and would facilitate communication and interaction among staff. The proposed action would provide state-of-the-art laboratories and research facilities. The new facilities will alleviate overcrowding and provide safe, secure, and modern laboratories. The F.I.R.E. Center will be one of very few such facilities in the world and will enhance Federal fire scene investigations. The Center will serve as a training center for advanced fire investigation and a repository for technical data related to fire investigation and research.

Finding

Pursuant to the provision of GSA Order ACM 1095.1D, the HB PBS P 1095.4B and the regulations issued by the Council of Environmental Quality, November 29, 1978, (40 CFR Parts 1500 to 1508), this is to advise you of our finding, based on the Final Environmental Assessment (EA), that the action described above is considered a major Federal action not significantly affecting the quality of the human environment.

Basis for Finding

The impacts of construction and operation of the proposed facilities on the environment were considered in an EA pursuant to the National Environmental Policy Act (NEPA) of 1969, as amended. The Final EA, which is available for review at the location listed above, is incorporated by reference into this Finding of No Significant Impact. Construction and operation of the proposed project would not have a significant adverse effect on the human environment.

Two alternate sites, the Ammendale Site and the Konterra Site, along with the No Action Alternative, were studied in detail in the EA. The EA describes the existing natural, physical social and cultural environment associated with each alternative. The EA also describes potential direct, indirect, and cumulative impacts associated with construction of the proposed facilities on each alternate site. Impacts of the No Action Alternative have also been analyzed.

Regardless of which of the two alternate sites is selected, moderate impacts will occur to the following resources: soils, forested areas, land use, aesthetics, utilities, and transportation facilities. If the Ammendale Site is selected, moderate impacts would also occur to Interior Forest Dwelling Species habitat. To mitigate potential impacts, GSA will implement the measures that are discussed in the Environmental Assessment.

This Finding of No Significant Impact will become final April 13, 1999 provided that no information leading to a contrary finding is received or comes to light during the 30-day public review period.

Nelson Alcalde,

Regional Administrator, National Capital Region, General Services Administration.

[FR Doc. 99–8576 Filed 4–6–99; 8:45 am]

BILLING CODE 6820–61–M

GENERAL SERVICES ADMINISTRATION

Implementation of Changes to the Small Business Competitiveness Demonstration Program

AGENCY: Office of Acquisition Policy, GSA.

ACTION: Notice.

SUMMARY: Title VII of the ''Business Opportunity Development Act of 1988'' (Pub. L. 100–656) established the Small Business Competitiveness Demonstration Program to provide for the testing of specified innovative procurement methods and procedures. The program was conducted by nine (9) designated agencies, including GSA, over a four (4) year period from January 1, 1989 to December 31, 1992. Title VII of Public Law 100–656 was amended by the Small Business Opportunity Enhancement Act of 1992 (Pub. L. 102–366) to extend the demonstration program through the Omnibus Consolidated Appropriations Act (Pub. L. 104–208) for one year to September 1997. In 1997, Congress also extended the aspect of the Program covering expansion of small business participation in the dredging industry. In December 1997, the Small Business Reauthorization Act of 1997, was enacted into law. As a result the program is extended indefinitely along with amendments to be implemented. The law designated four (4) industry groups for testing whether the competitive capabilities of the specified industry groups will enable them to successfully compete on an unrestricted basis. The four (4) industry groups are: construction (except dredging); architectural and engineering (A&E) services (including surveying and mapping); refuse systems and related services (limited to trash/garbage collection services); and non-nuclear ship repair. Under the program, when a participating agency misses its small business participation goals, restricted competition is reinstituted only for those designated industry groups that failed to attain the goal. The small business goal is 40 percent of the total contract dollars awarded for construction, trash/garbage collection services, non-nuclear ship repair and architect-engineer services. This notice announces modifications to GSA's solicitation practices under the demonstration program based on a review of the agency's performance during the period from October 1, 1998 through September 30, 1999. Modifications to solicitation practices are outlined in the **SUPPLEMENTARY INFORMATION** section below and apply to solicitations issued on or after February 1, 1999.

EFFECTIVE DATE: February 1, 1999.

FOR FURTHER INFORMATION CONTACT: Cecelia L. Davis, Office of Acquisition Policy, (202) 219–0202.

SUPPLEMENTARY INFORMATION: Procurements of construction or trash/garbage collections with an estimated value of $25,000 or less and procurement of A&E services with an estimated value of $50,000 or less shall

be reserved for emerging small business when there is a reasonable expectation of obtaining offers from two or more (three or more for A&E procurements) that will be competitive in terms of market price, quality, and delivery. If no such expectation exists, the procurement shall be processed as a small business simplified acquisition set aside in accordance with FAR 13.105 or in accordance with FAR 19.5 or 19.8. If the contracting officer determines a procurement cannot be set aside for small business under FAR 19.5 or 19.8, the procurement may be made using unrestricted procedures. The use of simplified acquisition purchase procedures is not required under the reserve program; therefore, any procurement method may be used. The reserve program applies only to new awards. Modifications within the scope of work of contracts having an initial award value in excess of the $25,000 for construction and trash/garbage collection service or $50,000 for A&E service are not subject to the reserve program.

Procurements of construction or trash/garbage collection services with estimated value in excess of $25,000 and procurements of A&E services with an estimated value in excess of $50,000 shall be made on an unrestricted basis as long as annual reviews show that GSA (as an agency) has attained the 40 percent goals. The 40 percent goal will be applied to each of the three (3) major groups in construction (groups 15, 16, and 17), to trash/garbage collection, and to A&E services. However, if goal attainment (for GSA as an agency) in any major group drops below 40 percent, small business set asides will be imposed. The continued use of unrestricted procedures is unaffected by an agency's failure to meet the 15 percent goal for emerging small business. When annual reviews show that GSA as an agency has not attained the 40 percent goal, competition will be restricted to small business, in accordance with FAR 19.5, on future procurements by the GSA contracting activities (e.g., regions) that failed to attain the goal. Other GSA contracting activities that meet the goals will continue to use unrestricted procedures. Notwithstanding the Small Business Competitiveness Demonstration Program, contracts may be awarded under the 8(a) program at any time. These procurements shall be made in accordance with the following procedures.

Construction Service in Groups 15, 16 and 17

Procurements for construction services in SIC group 15 (except solicitations issued by Regions 4, 7, and 9), SIC group 16 and in SIC group 17 shall be conducted on an unrestricted basis.

Procurements for construction services in SIC group 15 issued by contracting activities in Regions 4, 7, and 9 shall be set-aside for small business when there is a reasonable expectation of obtaining competition from two or more small businesses. If no expectation exists, the procurements may be conducted on an unrestricted basis.

Region 4 (Southeast-Sunbelt) encompasses the states of Alabama, Florida, Georgia, Kentucky, North Carolina, South Carolina, Mississippi and Tennessee.

Region 7 (Greater Southwest) encompasses the states of Arkansas, Louisiana, Oklahoma, New Mexico and Texas.

Region 9 (Pacific Rim) encompasses the state of Arizona, California, Hawaii and Nevada.

Trash/Garbage Collection Services in PSC S205

Procurements for trash/garbage collection services in PSC S205 (except solicitations issued by contracting activities in Regions 4 and 6) shall be conducted on an unrestricted basis.

Procurements for trash/garbage collection services issued by contracting activities in Regions 4 and 6 shall be set aside for small business when there is a reasonable expectation of obtaining competition from two or more small businesses. If no expectation exists, the procurements may be conducted on an unrestricted basis.

Region 4 (Southeast-Sunbelt) encompasses the states of Alabama, Florida, Georgia, Kentucky, North Carolina, South Carolina, Mississippi and Tennessee.

Region 6 (Heartland) encompasses the states of Iowa, Kansas, Missouri and Nebraska.

Architech-Engineer Services (All PSC Codes Under the Demonstration Program)

Procurements for architect-engineer services (except solicitations issued by contracting activities in Regions 2, 4, 7, 10 and NCR) shall be conducted on an unrestricted basis.

Procurements for architect-engineer services issued by contracting activities in Regions 2, 4, 7, 10 and NCR shall be set aside for small business when there is a reasonable expectation of obtaining competition from two or more small businesses. If no expectation exists, the procurements may be conducted on an unrestricted basis.

Region 2 (Northeast and Caribbean) encompasses the states of New Jersey, New York and territories of Puerto Rico and the Virgin Islands.

Region 4 (Southeast-Sunbelt) encompasses the states of Alabama, Florida, Georgia, Kentucky, North Carolina, South Carolina, Mississippi and Tennessee.

Region 7 (Greater Southwest) encompasses the states of Arkansas, Louisiana, Okahoma, New Mexico and Texas.

Region 10 (Northwest-Arctic) encompasses the states of Alaska, Idaho, Oregon and Washington.

The National Capitol Region (NCR) encompasses the District of Columbia, Montgomery and Prince Georges counties in Maryland the cities of Alexandria, Fairfax and Falls Church and the counties of Arlington, Fairfax, Loudoun and Prince William in Virginia.

Non-Nuclear Ship Repair

GSA does not procure for non-nuclear ship repair.

Dated: March 26, 1999.

J. Les Davison,

Acting Deputy Associate Administrator for Acquisition Policy.

[FR Doc. 99–8577 Filed 4–6–99; 8:45 am]

BILLING CODE 6820–61–M

DEPARTMENT OF HEALTH AND HUMAN SERVICES

President's Council on Physical Fitness and Sports

AGENCY: Office of the Secretary, Office of Public Health and Science, HHS.

ACTION: Notice of meeting.

SUMMARY: As stipulated by the Federal Advisory Committee Act, the Department of Health and Human Service (DHHS) is hereby given notice that the President's Council on Physical Fitness and Sports will hold a meeting. This meeting is open to the public. A description of the Council's functions is included also with this notice.

DATES: May 3, 1999, from 10:00 a.m. to 3:00 p.m.

ADDRESSES: Department of Health and Human Services, Room 800 Hubert H. Humphrey Building, 200 Independence Avenue, SW., Washington, DC 20201.

FOR FURTHER INFORMATION CONTACT: Sandra Perlmutter, Executive Director,

President's Council on Physical Fitness and Sports, Room 738H Hubert H. Humphrey Building, 200 Independence Avenue, SW., Washington, DC 20201, (202) 690–5187.

SUPPLEMENTARY INFORMATION: The President's Council on Physical Fitness and Sports (PCPFS) was established in 1956 by President Eisenhower after published reports indicated that American boys and girls were unfit compared to the children of Western Europe.

The Council has undergone two name and changes and several reorganizations before reaching its present status as a program office within the Office of Public Health and Science in the Department of Health and Human Services. It currently operates under directives issued in Executive Order 12345, as amended. PCPFS serves as a catalyst to promote, encourage, and motivate the development of physical fitness and sports participation for all ages. The primary functions of the Council include (1) to advise the President and Secretary concerning progress made in carrying out the provisions of the Executive Order and recommend to the President and Secretary, as necessary, actions to accelerate progress; (2) to advise the Secretary on matters pertaining to the ways and means of enhancing opportunities for participation in physical fitness and sports actions to extend and improve physical activity programs and services; and (3) to advise the Secretary on State, local, and private actions to extend and improve physical activity programs and services.

This meeting of the Council is being held to apprise members of the status of ongoing Council programs and activities, and to make plans for future directions.

Dated: March 30, 1999.

Sandra. P. Perlmutter,

Executive Director, President's Council on Physical Fitness and Sports.

[FR Doc. 99–8513 Filed 4–6–99; 8:45 am]

BILLING CODE 4160–17–M

DEPARTMENT OF HEALTH AND HUMAN SERVICES

Centers for Disease Control and Prevention

Interagency Committee on Smoking and Health: Notice of Recharter

This gives notice under the Federal Advisory Committee Act (Pub. L. 92–463) of October 6, 1972, that the charter for the Interagency Committee on Smoking and Health (ICSH) of the Centers for Disease Control and Prevention, Department of Health and Human Services, has been renewed for a 2-year period, through March 19, 2001.

FOR FURTHER INFORMATION CONTACT: Ms. Elizabeth Majestic, Deputy Director, Office on Smoking and Health, National Center for Chronic Disease Prevention and Health Promotion, CDC, 4770 Buford Highway, NE, M/S K–50, Atlanta, Georgia 30341, telephone 770/488–5709.

The Director, Management Analysis and Services Office, has been delegated the authority to sign **Federal Register** notices pertaining to announcements of meetings and other committee management activities, for both the Centers for Disease Control and Prevention and the Agency for Toxic Substances and Disease Registry.

Dated: March 30, 1999.

Carolyn J. Russell,

Director, Management Analysis and Services Office, Centers for Disease Control and Prevention (CDC).

[FR Doc. 99–8568 Filed 4–6–99; 8:45 am]

BILLING CODE 4163–18–P

DEPARTMENT OF HEALTH AND HUMAN SERVICES

Centers for Disease Control and Prevention

[Program Announcement 99066]

Primate Model for Studying the Pathogenesis of Measles Infections and for Development of Improved Measles Vaccines; Notice of Availability of Funds

A. Purpose

The Centers for Disease Control and Prevention (CDC) announces the availability of fiscal year (FY) 1999 funds for a cooperative agreement program to support research into the pathogenesis of measles virus in a primate model. This program addresses the ''Healthy People 2000'' priority area of Immunization and Infectious Diseases. The goal of this program is to assist researchers in defining the mechanism of immune protection from measles virus and to use this information to develop improved vaccines for worldwide measles control efforts.

Specifically, the purpose of the program is to achieve the following research goals:

1. Use the rhesus macaque as a primate model for measles infections. Studies should attempt to reproduce disease in rhesus that closely resembles measles in humans. It will be important to develop viral stocks which can reliably produce disease in rhesus by the intranasal route and to describe the pathogenesis of this disease in the animal host.

2. Characterize the immune response to natural measles disease and measles vaccination. Studies should attempt to measure differences between the immune response in animals receiving measles vaccines to those experiencing infection with a virulent strain. Efforts should be aimed at providing a complete description of the humoral, and especially, the cellular immune responses.

3. Development of improved measles vaccines. Research efforts should be directed at developing and testing novel vaccine formulations that could be used to stimulate an immune response in the presence of maternal antibody. Such vaccines would be used to protect newborns from measles infection or disease during their first year of life. Vaccines that could be used to stimulate or boost immunity in immunocompromized individuals should also be considered.

4. Evaluation of immune response to individual measles virus antigens. Research should be designed to measure the immune response generated by experimental measles vaccines and individual measles antigens. Efforts should be made to identify epitopes on measles proteins which are the most effective in inducing humoral and cellular immune responses in an outbred population.

B. Eligible Applicants

Applications may be submitted by public and private nonprofit organizations and by governments and their agencies; that is, universities, colleges, research institutions, hospitals, other public and private nonprofit organizations, State and local governments or their bona fide agents, and federally recognized Indian tribal governments, Indian tribes, or Indian tribal organizations.

Note: Public Law 104–65 states that an organization described in section 501(c)(4) of the Internal Revenue Code of 1986 that engages in lobbying activities is not eligible to receive Federal funds constituting an award, grant, cooperative agreement, contract, loan, or any other form.

C. Availability of Funds

Approximately $300,000 is available in FY 1999 to fund approximately two awards. It is expected that the average award will be $150,000, ranging from $100,000 to $200,000. It is expected that the awards will begin on or about

September 30, 1999 and will be made for a 12-month budget period within a project period of up to three years. The funding estimate may change.

Continuation awards within an approved project period will be made on the basis of satisfactory progress as evidenced by required reports and the availability of funds.

Funding Preferences

Although applications for new studies are encouraged, funding preference will be given to the competing continuation application over applications for programs not already receiving support under the existing program. The current awardee has implemented vaccine research that requires continued support to become fully developed and to realize the benefits of continued vaccine development (see Background Information Attachment II).

D. Program Requirements

In conducting activities to achieve the purpose of this program, the recipient shall be responsible for the activities under 1., below, and CDC shall be responsible for conducting activities under 2., below:

1. Recipient Activities
   a. Develop study design to accomplish the research goals described above.
   b. Perform all inoculations of research animals. Maintain records of clinical observations and obtain samples for laboratory analysis.
   c. Perform laboratory analysis of samples obtained from study animals.
   d. Provide routine veterinary care, housing and other support for rhesus macaques to be used in experiments. Comply fully with PHS policies regarding research on animal subjects.
   e. Maintain sufficient numbers of rhesus macaques so that experiments can be completed within an appropriate amount of time.
   f. Develop experimental measles vaccines and evaluate them in the animal model.
   g. Analyze data and prepare manuscripts describing results of research investigations.
2. CDC Activities
   a. Provide technical assistance and advice for design and conduct of the research.
   b. Provide assistance in development of various preparations of measles virus antigens, recombinant viruses, rescued viruses or cDNA clones for use as experimental vaccines.
   c. Provide specialty reagents such as monoclonal and polyclonal antiserum and PCR primers as necessary.
   d. Assist in conducting specialized analysis of samples obtained from test animals. These may include special serological or immunological assays, as well as assays to detect and measure measles virus or measles virus RNA in various tissue samples. Assist with genetic characterization of viruses used in the study.
   e. Assist in data analysis and presentation.

E. Application Content

Use the information in the Program Requirements, Other Requirements, and Evaluation Criteria sections to develop the application content. Your application will be evaluated on the criteria listed, so it is important to follow them in laying out your program plan. The narrative should be no more than 10 double-spaced pages, printed on one side, with one inch margins, and unreduced font.

F. Submission and Deadline

Application

Submit the original and two copies of PHS–5161–1 (OMB Number 0937–0189). Forms are in the application kit. On or before June 2, 1999, submit the application to: Gladys Gissentanna, Grants Management Specialist, Grants Management Branch, Procurement and Grants Office, Announcement 99066, Centers for Disease Control and Prevention (CDC), 2920 Brandywine Road, Room 3000, Atlanta, Georgia 30341–4146.

Deadline: Applications shall be considered as meeting the deadline if they are either:

1. Received on or before the deadline date; or

2. Sent on or before the deadline date and received in time for orderly processing. (Applicants must request a legibly dated U.S. Postal Service postmark or obtain a legibly dated receipt from a commercial carrier or U.S. Postal Service. Private metered postmarks shall not be acceptable as proof of timely mailing.)

Late Applications: Applications which do not meet the criteria in (a) or (b) above are considered late applications, will not be considered, and will be returned to the applicant.

G. Evaluation Criteria

Each application will be evaluated individually against the following criteria by an independent review group appointed by CDC (100 total points):

1. Background and Need (10 total points)
   Extent to which applicant demonstrates a clear understanding of the purpose and objectives of this proposed cooperative agreement.
2. Capacity (45 total points)
   a. Extent to which applicant describes adequate resources and facilities for conducting the project. Extent to which facilities for the safe handling of infectious agents are available. (5 points)
   b. Extent to which applicant documents that professional personnel involved in the project are qualified and have past experience and achievements in research related to that proposed in this cooperative agreement as evidenced by curriculum vitae, publications, etc. Extent to which the applicant demonstrates experience with virology, particularly the virology of measles virus. (10 points)
   c. Extent to which applicant demonstrates experience with viral pathogenesis and immunology in rhesus macaques or other primate system. Extent to which the applicant can demonstrate previous or ongoing experience with measles infections of primates. Extent to which the applicant can produce a measles infection that is similar to measles infections in humans in rhesus macaques following intranasal inoculation. (30 points)
3. Objectives and Technical Approach (45 total points)
   a. Extent to which applicant describes objectives of the proposed project which are consistent with the purpose and program requirements of this cooperative agreement and which are measurable and time-phased. (5 points)
   b. Extent to which the plan clearly describes applicant's technical approach/methods for conducting the proposed studies. Extent to which applicant describes specific study protocols or plans for the development of study protocols that are appropriate for achieving project objectives (also see Attachment III). (20 points)
   c. Extent to which applicant provides a detailed plan for evaluating study results and for evaluating progress towards achieving project objectives. (20 points)
4. Budget (Not Scored)
   Extent to which the proposed budget is reasonable, clearly justifiable, and consistent with the intended use of cooperative agreement funds.
5. Animal Subjects (Not Scored)
   Extent to which the application adequately address the

requirements of Public Health Policy on Humane Care and Use of Laboratory Animals.

H. Other Requirements

Technical Reporting Requirements Provide CDC with original plus two copies of:

1. progress reports (annual);
2. financial status report, no more than 90 days after the end of the budget period; and
3. final financial status and performance reports, no more than 90 days after the end of the project period.

Send all reports to: Gladys T. Gissentanna, Grants Management Specialist, Grants Management Branch, Procurement and Grants Office, Centers for Disease Control and Prevention (CDC), 2920 Brandywine Road, Room 3000, Atlanta, GA 30341–4146.

The following additional requirements are applicable to this program. For a complete description of each, see Attachment I in the application kit.

AR–3 Animal Subjects Requirements
AR–10 Smoke-Free Workplace Requirements
AR–11 Healthy People 2000
AR–12 Lobbying Restrictions
AR–15 Proof of Non-Profit Status

I. Authority and Catalog of Federal Domestic Assistance Number

This program is authorized under the Public Health Service Act Sections 301(a)[42 U.S.C. 241(a)], 311 [42 U.S.C. 243], and 317(k) (1) and (2)[42 U.S.C. 247b(k) (1)and (2)], as amended. The Catalog of Federal Domestic Assistance number is 93.283.

J. Where to Obtain Additional Information

To Receive additional written information and to request an application kit, call 1–888–GRANTS4 (1–888 472–6874). You will be asked to leave your name and address and will be instructed to identify the Announcement number of interest. Please refer to Program Announcement 99066. You will receive a complete program description, information on application procedures, an application package. If you have any questions after reviewing the contents of all the documents, business management technical assistance may be obtained from Gladys T. Gissentanna, Grants Management Specialist, Grants Management Branch, Procurement and Grants Office, Centers for Disease Control and Prevention (CDC), 2920 Brandywine Road, Room 3000, Atlanta, GA 30341–4146, telephone (770) 488–2753, e-mail address, gcg4@cdc.gov.

See also the CDC home page on the Internet: http://www.cdc.gov.

For program technical assistance, contact Paul A. Rota, Ph.D., Supervisory Microbiologist, Measles Section, National Center For Infectious Diseases, Centers for Disease Control and Prevention, 1600 Clifton Road, Mailstop C–22, Atlanta, GA 30333, telephone (404) 639–3308, fax (404) 639–4187, e-mail address, par1@cdc.gov.

Dated: April 1, 1999.

John L. Williams,

Director, Procurement and Grants Office, Centers for Disease Control and Prevention (CDC).

[FR Doc. 99–8567 Filed 4–6–99; 8:45 am]

BILLING CODE 4163–18–P

DEPARTMENT OF HEALTH AND HUMAN SERVICES

Food and Drug Administration

Cardiovascular and Renal Drugs Advisory Committee; Notice of Meeting

AGENCY: Food and Drug Administration, HHS.

ACTION: Notice.

This notice announces a forthcoming meeting of a public advisory committee of the Food and Drug Administration (FDA). The meeting will be open to the public.

Name of Committee: Cardiovascular and Renal Drugs Advisory Committee.

General Function of the Committee: To provide advice and recommendations to the agency on FDA's regulatory issues.

Date and Time: The meeting will be held on April 29, 1999, from 9 a.m. to 5:30 p.m., and on April 30, 1999, from 8:30 a.m. to 4 p.m.

Location: National Institutes of Health, Clinical Center, Bldg. 10, Jack Masur Auditorium, 9000 Rockville Pike, Bethesda, MD.

Contact Person: Joan C. Standaert, Center for Drug Evaluation and Research (HFD–110), Food and Drug Administration, 5600 Fishers Lane, Rockville, MD 20857, 419–259–6211, or Lauren W. Parcover (HFD–21), 301–827–7001, or FDA Advisory Committee Information Line, 1–800–741–8138 (301–443–0572 in the Washington, DC area), code 12533. Please call the Information Line for up-to-date information on this meeting.

Agenda: On April 29, 1999, the committee will discuss new drug application (NDA) 19–865/S–007, Betapace® (sotalol), Berlex Laboratories, Inc., for prevention of the recurrence of chronic or paroxysmal symptomatic atrial fibrillation/atrial flutter. On April 30, 1999, the committee will discuss the interpretation of antiarrhythmic trials in patients with implanted ventricular defibrillators.

Procedure: Interested persons may present data, information, or views, orally or in writing, on issues pending before the committee. Written submissions may be made to the contact person by April 21, 1999. Oral presentations from the public will be scheduled between approximately 9 a.m. and 10 a.m. Time allotted for each presentation may be limited. Those desiring to make formal oral presentations should notify the contact person before April 21, 1999, and submit a brief statement of the general nature of the evidence or arguments they wish to present, the names and addresses of proposed participants, and an indication of the approximate time requested to make their presentation.

Notice of this meeting is given under the Federal Advisory Committee Act (5 U.S.C. app. 2).

Dated: March 26, 1999.

Michael A. Friedman,

Deputy Commissioner for Operations.

[FR Doc. 99–8500 Filed 4–6–99; 8:45 am]

BILLING CODE 4160–01–F

DEPARTMENT OF HEALTH AND HUMAN SERVICES

Food and Drug Administration

Drug Abuse Advisory Committee; Notice of Meeting

AGENCY: Food and Drug Administration, HHS.

ACTION: Notice.

This notice announces a forthcoming meeting of a public advisory committee of the Food and Drug Administration (FDA). At least one portion of the meeting will be closed to the public.

Name of Committee: Drug Abuse Advisory Committee.

General Function of the Committee: To provide advice and recommendations to the agency on FDA's regulatory issues.

Date and Time: The meeting will be held on April 20, 1999, from 8:30 a.m. to 4 p.m.

Location: Center for Drug Evaluation and Research/Advisory Committee Conference Room, 5630 Fishers Lane, Rockville, MD.

Contact Person: Karen M. Templeton-Somers, Center for Drug Evaluation and Research (HFD–21), Food and Drug Administration, 5600 Fishers Lane, Rockville, MD 20057, 301–827–7001, or

FDA Advisory Committee Information Line, 1–800–741–8138 (301–439–0572 in the Washington, DC area), code 12535. Please call the Information Line for up-to-date information on this meeting.

Agenda: The committee will be discussing appropriate patient populations and outcome measures for clinical trials for drugs to treat alcohol use disorders.

Procedure: On April 20, 1999, from 8:30 a.m. to 1:30 p.m., the meeting is open to the public. Interested persons may present data, information, or views, orally or in writing, on issues pending before the committee. Written submissions may be made to the contact person by April 6, 1999. Oral presentations from the public will be scheduled between approximately 8:30 a.m. to 9:30 a.m. Time allotted for each presentation may be limited. Those desiring to make formal oral presentations should notify the contact person before April 13, 1999, and submit a brief statement of the general nature of the evidence or arguments they wish to present, the names and addresses of proposed participants, and an indication of the approximate time requested to make their presentation.

Closed Committee Deliberations: On April 20, 1999, from 1:30 p.m. to 4 p.m., the committee will review trade secret and/or confidential information relevant to pending investigational new drugs or new drug applications. This portion of the meeting will be closed to permit discussion of this information (5 U.S.C. 552b(c)(4)).

FDA regrets that it was unable to publish this notice 15 days prior to the April 20, 1999, Drug Abuse Advisory Committee meeting. Because the agency believes there is some urgency to bring these issues to public discussion and qualified members of the Drug Abuse Advisory Committee were available at this time, the Commissioner concluded that it was in the public interest to hold this meeting even if there was not sufficient time for the customary 15-day public notice.

Notice of this meeting is given under the Federal Advisory Committee Act (5 U.S.C. app. 2).

Dated: March 30, 1999.

Michael A. Friedman,

Deputy Commissioner for Operations.

[FR Doc. 99–8590 Filed 4–6–99; 8:45 am]

BILLING CODE 4160–01–F

DEPARTMENT OF HEALTH AND HUMAN SERVICES

Food and Drug Administration

Peripheral and Central Nervous System Drugs Advisory Committee; Notice of Meeting

AGENCY: Food and Drug Administration, HHS.

ACTION: Notice.

This notice announces a forthcoming meeting of a public advisory committee of the Food and Drug Administration (FDA). The meeting is open to the public.

Name of Committee: Peripheral and Central Nervous System Drugs Advisory Committee.

General Function of the Committee: To provide advice and recommendations to the agency on FDA's regulatory issues.

Date and Time: The meeting will be held on April 28 and 29, 1999, 8:30 a.m. to 5 p.m.

Location: Holiday Inn Gaithersburg, The Ballrooms, Two Montgomery Village Ave., Gaithersburg, MD.

Contact Person: Sandra Titus or Tony Slater, Food and Drug Administration, Center for Drug Evaluation and Research (HFD–21), 5600 Fishers Lane (for express delivery, 5630 Fishers Lane, rm. 1093), Rockville, MD 20857, 301–827–7001, or FDA Advisory Committee Information Line, 1–800–741–8138 (301–443–0572 in the Washington, DC area), code 12543. Please call the Information Line for up-to-date information on this meeting.

Agenda: On April 28, 1999, the committee will discuss the safety and efficacy of new drug application (NDA) 20–884, Aggrenox™ (dipyridamole/aspirin capsules, Boehringer Ingelheim Pharmaceuticals, Inc.), proposed to reduce the combined risk of death and nonfatal stroke in patients who have had transient ischemia of the brain or completed ischemic stroke.

On April 29, 1999, the committee will discuss the safety and efficacy of NDA 20–399, Freedox® (tirilazad mesylate injection, Pharmacia and Upjohn, Inc.), proposed for the treatment of aneurysmal subarachnoid hemorrhage to improve survival and functional outcome in patients with poor neurologic function following the initial hemorrhage.

Procedure: Interested persons may present data, information, or views, orally or in writing, on issues pending before the committee. Written submissions may be made to the contact person by April 21, 1999. Oral presentations from the public will be scheduled between approximately 1 p.m. and 2 p.m. on April 28 and 29, 1999. Time allotted for each presentation may be limited. Those desiring to make formal oral presentations should notify the contact person before April 21, 1999, and submit a brief statement of the general nature of the evidence or arguments they wish to present, the names and addresses of proposed participants, and an indication of the approximate time requested to make their presentation.

Notice of this meeting is given under the Federal Advisory Committee Act (5 U.S.C. app. 2).

Dated: March 26, 1999.

Michael A. Friedman,

Deputy Commissioner for Operations.

[FR Doc. 99–8501 Filed 4–6–99; 8:45 am]

BILLING CODE 4160–01–F

DEPARTMENT OF HEALTH AND HUMAN SERVICES

Health Resources and Services Administration

Statement of Organization, Functions and Delegations of Authority

This notice amends Part R of the Statement of Organization, Functions and Delegations of Authority of the Department of Health and Human Services (DHHS), Health Resources and Services Administration (60 FR 56605 as amended November 6, 1995, as last amended at 64 FR 14000, dated March 23, 1999). This notice reflects the reorganization of the Maternal and Child Health Bureau.

I. Under Part R, HRSA, Maternal and Child Health Bureau (RM) make the following changes.

Section RM–10 Organization and Functions

Office of The Director (RM)

Provides national leadership and policy direction for the planning, development, implementation and evaluation of the programs and activities of the Bureau. These programs are designed to improve the health of women and childbearing age, infants, children, adolescents, and their families, of children with special health needs, and of persons with hemophilia. Specifically: (1) Oversees the day-to-day management and operations of the Bureau's Offices and Divisions; (2) coordinates all internal functions of the Bureau and facilities effective, collaborative relationships with other health and related programs; (3) establishes a program mission, goals,

objectives, and policy positions consistent with legislation and broad Administration guidelines; (4) serves as the focal point for managing the Bureau-wide strategic planning operation as it relates to long and short range programmatic goals and objectives for the Bureau; (5) works with other Bureaus to further the Agency goals and mission; (6) develops and administers internal operating policies and procedures and provides guidance and direction to Field Office staff, to State Health Officers, and to State Maternal and Child Health and Special Health Needs Directors; (7) serves as principal contact point to the Agency, the Department, Office of Management and Budget (OMB), and the White House on matters concerning the health status of America's mothers and children; (8) directs and coordinates the Bureau's program responsibilities, including the Maternal and Child Health block grants to States, contracts, and other funding arrangements in the areas of research, training, genetics, hemophilia, and health service improvement through regionally and nationally significant projects, a national program to improve emergency medical services for children, a Health Start program designed to strengthen and improve the delivery of health services to improve the outcome of pregnancy, a national program on traumatic brain injury and on injury prevention for children and adolescents, and a national abstinence education program; (9) directs and coordinates the planning, implementation and monitoring of a national maternal and child health data and information system based on State and local jurisdictions; (10) provides direction and serves as the focal point for international matters of concern to the health of mothers, children, and their families; (11) develops a policy statement and an action plan to address the health needs of mothers and children from culturally diverse groups; (12) directs and coordinates Bureau activities in support of Equal Opportunity programs; (13) provides direction for the Bureau's Civil Rights compliance activities; (14) provides information and reports on the Bureau's programs to public, health, education and related professional associations, the Congress, other Federal agencies, OMB, and the White House; (15) coordinates public communications and public affairs activities for the Bureau; (16) administers the implementation of the Privacy Act and the Freedom of Information Act in the Bureau; and (17) performs the executive secretariat functions and coordinates responses to General Accounting Office (GAO) audit reports and monitors the implementation of GAO recommendations.

Office of Program Development (RM–1)

Serves as the Bureau focal point for the management of the planning, evaluation, legislation, and legislative implementation activities, including the development, coordination, and dissemination of program objectives, policy positions, reports and strategic plans. Specifically: (1) advises and assists the Bureau Director and the Bureau in the development, coordination and management of legislative planning documents, responses to Departmental and HRSA initiatives, and information papers to support Bureau and Administration goals; (2) interprets evaluation requirements, develops, coordinates, and manages the preparation of the annual evaluation plans and activities, and conducts or contracts for specific evaluation projects related to the performance of MCHB programs; (3) provides staff services, disseminates information, and develops, coordinates, and manages Bureau activities relating to legislation and regulations, and develops and coordinates legislative proposals and regulations; (4) develops, coordinates, and manages Bureau activities related to the development, clearance, and dissemination of Federal Register notices, guidelines, final grant reports, and periodic and annual reports to other Federal and non-Federal agencies; (5) participates in the development of budget submissions related to the office's functions; (6) coordinates activities closely and continuously with the Office of Planning, Evaluation and Legislation, HRSA, and other MCHB Divisions and Offices in promoting program objectives and the mission of the Bureau; (7) provides liaison with public, private, professional, and voluntary organizations on programs related to MCHB planning and legislative issues; and (8) participates in international health activities of the Bureau.

Office of Operations and Management (RM1)

Plans, directs, coordinates, and evaluates Bureau-wide administrative and management activities; coordinates and monitors a program and administrative policy implementation; and maintains close liaison with officials of the Agency, and the Office of the Secretary on matters relating to these activities. Specifically: (1) serves as the Associate Administrator's and Bureau principal source for management and administrative advice and assistance for Headquarters and Field Office staff operations; (2) provides or serves as liaison for program support services and resources, such as procurement of equipment and supplies, space, property, etc.; (3) provides leadership on intergovernmental activities of the Bureau which requires central administrative direction or intergovernmental activities of the Bureau, which require central direction of cross cutting administrative issues affecting program activities; (4) participates in the development of strategic plans, regulatory activities, policy papers, and legislative proposals relating to MCH programs; (5) serves as liaison with the Office of Human Resources Development, HRSA, and coordinates personnel activities for the Bureau; (6) directs, conducts, and coordinates manpower management activities and advises on the allocation of personnel resources including intra- and interagency agreements of Federal assignees to MCH programs: (7) manages the performance appraisal and employee performance management systems; (8) develops and carries out a full range of financial management activities, including the annual budget formulation, presentation, and execution functions; (9) determines State allocation of MCH Block Grant funds based on formula and current census data; (10) is responsible for planning, directing, coordinating, and evaluating Bureau-wide grants management activities, including cooperative agreement operations; (11) coordinates the development and processing of Bureau contract procurement activities and maintains liaison with the Division of Grants and Procurement Management, HRSA; (12) plans, coordinates, and facilities the Bureau's intra- and interagency agreement activities; (13) provides organization and management analysis, develops policies and procedures for internal operation, and interprets and implements the Administration's management policies, procedures and systems; (14) coordinates the Bureau's program and administrative delegations of authority activities; (15) provides staff services in the operational planning and program analysis; (16) is responsible for paperwork management functions, including the development and maintenance of manual issuances; (17) provides direction regarding new developments in office management activities; (18) participates in international health activities of the Bureau; and (19) responsible for the

coordination of Bureau funds and resources for grants, contracts and cooperative agreements.

Division of Services for Children With Special Health Needs (RM2)

Provides national leadership in planning, directing, coordinating, monitoring, and evaluating national programs focusing on the promotion of health and prevention of disease among children with special health needs, and their families, with special emphasis on the development and implementation of family-centered, comprehensive, care-coordinated, community-based and culturally competed systems for care for such populations. Specifically: (1) Administers a program which supports the development of systems of care and services for children with special health care needs and their families; (2) develops policies and guidelines and promulgates standards for professional services and effective organization and administration of health programs for children with special health care needs and their families; (3) accounts for the administration of funds and other resources for grants, contracts and programmatic consultation and assistance; (4) coordinates with other MCHB Divisions and Offices in promoting program objectives and the mission of the Bureau; (5) provides consultation and technical assistance to State programs for children with special health care needs and to local communities, consistent with a Bureau wide technical assistance consultation plan, and in concert with other agencies and organizations; (6) provides liaison with public, private, professional and voluntary organizations on programs designed to improve services for children with special health care needs and their families; (7) develops and implements a national program for those at risk or living with genetic diseases, including a national program for persons with hemophilia, implementing a system of demonstration projects related to early identification, referral, treatment, education, and counseling information; (8) coordinates within this Agency and with other Federal programs (particularly Title XIX of the Social Security Act, Supplemental Security Income (SSI), Individuals with Disabilities Education Act (IDEA), and others) to extend and improve comprehensive, coordinated services and promote integrated State-based systems of care for children with special health care needs, including those with genetic disorders, and their families; (9) promotes the dissemination of information on preventive health services and advances in the care and treatment of children with special health care needs, including those with genetic disorders, and their families; (10) participates in the development of strategic plans, regulatory activities, policy papers, legislative proposals, and budget submissions relating to health services for children with special health care needs, including those with genetic disorders, and their families; (11) provide a focus for international health activities of the Bureau for services for children with special health care needs and their families; (12) participates in the development of interagency agreements concerning Federal assignees to State MCH programs; and (13) responsible for the administration of funds and other resources for grants, contracts, and cooperative agreements.

Division of Child, Adolescent,and Family Health (RM3)

Provides national leadership in planning, directing, coordinating, monitoring, and evaluating national programs focusing on the promotion of health and prevention of disease and injury among children, adolescents, and their families with special emphasis on the development and implementation of family-centered, comprehensive, coordinated, community based and culturally competent systems of care for such populations. Specifically: (1) administers a program which supports the development of systems of care and services for children, adolescents, and their families; (2) develops policies and guidelines and promulgates standards for professional services and effective organization and administration of health programs for children, adolescents, and their families; (3) accounts for the administration of funds and other resources for grants, contracts, and programmatic consultation and assistance; (4) coordinates with MCHB Divisions and Offices in promoting program objectives and the mission of the Bureau; (5) serves as the focal point within the Bureau in implementing programmatic statutory requirements for State programs for children, adolescents, and their families; (6) provides consultation and technical assistance to state programs for children, adolescents, and their families and to local communities, consistent with Bureau-wide technical assistance consultation plan, working with other agencies and organizations; (7) provides liaison with public, private, professional and voluntary organizations on programs designed to improve services for children, adolescents, and their families; (8) serves as the national focus for improving the health and well-being of adolescents; (9) carries out a national program on school staff development activities; (10) carries out a national program designed to improve the provision of emergency medical services for children; (11) carries out a national program on traumatic brain injury and on injury prevention for children and adolescents; (12) coordinates within this Agency and with other Federal programs (particularly Title XIX of the Social Security Act) to extend and improve comprehensive, coordinated services and promote integrated State-based systems of care for children, adolescents, and their families; (13) disseminates information on preventive health services and advances in the care and treatment of children, adolescents, and their families; (14) participates in the development of strategic plans, regulatory activities, policy papers, legislative proposals, and budget submissions relating to health services for children, adolescents, and their families; (15) provides a focus for international health activities for the Bureau for services for children, adolescents, and their families; and (16) responsible for the administration of funds and other resources for grants, contracts, and cooperative agreements.

Division of Research, Training and Education (RM4)

Provides national leadership in planning, directing, coordinating, monitoring, and evaluating national programs related to research, professional and public education activities focusing on the promotion of health and prevention of disease among women of reproductive age, infants, children, adolescents and their families, with special emphasis on the development and implementation of family-centered, comprehensive, care-coordinated, community-based and culturally competent systems of care for such population. Specifically: (1) administers a program which supports the development of systems of care and services for children, had their families; (2) develops policies and guidelines and promulgates standards through research, professional and public education and training activities for the Bureau; (3) accounts for the administration of funds and other resources for grants, contracts and programmatic consultation and assistance; (4) coordinates with other MCHB Divisions and Offices in promoting program objectives and the mission of the Bureau; (5) provides liaison with public, private, professional and voluntary organizations on programs and activities; (6) disseminates information on research, professional and public education and training activities to states and

localities; (7) participates in the development of strategic plans, regulatory activities, policy papers, legislative proposals, and budget submissions; (8) provides a focus for international health activities of the Bureau relating to research, professional and public education and training activities for the Bureau; and (9) responsible for the administration of funds and other resources for grants, contracts and cooperative agreements.

Division of Perinatal Systems and Women's Health (RM5)

Provides national leadership in planning, directing, coordinating, monitoring, and evaluating national programs focusing on perinatal, infant and women's health to improve and strengthen the access, delivery, quality, coordination and information of services for the targeted populations, especially for the vulnerable and high-risk. Specifically: (1) administers national programs on perinatal and women's health with an emphasis on infant mortality reduction and prevention; (2) provides policy direction, technical assistance, and professional consultation on Division programs; (3) accounts for the administration of funds and other resources for grants, contracts and programmatic consultation and assistance; (4) coordinates with other MCHB Divisions and Offices in promoting Division programs' objectives and mission of the Bureau; (5) serves as the focal point within the Bureau in implementing programmatic requirements for Division's program; (6) coordinates Division programs within the Agency and with other Federal programs; (7) provides liaison with public, private, professional and voluntary organizations for Division program; (8) disseminates information on Division programs; (9) participates in the development of strategic plans, regulatory activities, policy papers, legislative proposals, and budget submissions relating to Division programs; (10) provides a focus for international health activities of the Bureau for Division programs; and (11) responsible for the administration of funds and other resources for grants, contracts, and cooperative agreements.

Division of State And Community Health (RM6)

In collaboration with MCHB Division and Offices, serves as the organizational focus for the administration of responsibilities related to the MCH Block Grant to States Program. Specifically: (1) Provides national leadership, direction, coordination, and administrative oversight related to the development and management of the State MCH Block Grant applications and the annual report; (2) based on review of State Book grant applications and annual reports submitted by States, develops, plans, manages, and monitors a Bureau-wide program of technical assistance and consultation in collaboration with other Bureau Divisions and related health programs; (3) develops and manages a program for the collection, analysis and dissemination of National and State information and data to various constituencies including the public, States, and Congress about the Block Grant to States Program; (4) coordinates within this Agency and with other Federal programs (particularly Title XIX of the Social Security Act) to extend and improve comprehensive, coordinated services in the Block Grant to States Program; (5) develops, plans, manages, and monitors the abstinence only education grant program to the States; (6) develops, plans;, manages, and monitors the State Systems Development Initiative (SSDI) grant to the States program; (7) provides leadership and direction to the ten Field Office staffs in concert with the MCHB Division and HRSA; (8) participates in activities related to the Special Projects of Regional and National Significance (SPRANS) program to facilitate the dissemination of effective knowledge related to State MCH functions; (9) manages and monitors interagency agreements of Federal assignees to State MCH program; (10) participates in the development of strategic plans, regulatory activities, policy papers, legislative proposals and budget submissions relating to health services for women of childbearing age, infants, children, adolescents, children with special health care needs and their families; (11) participates in international health activities of the Bureau and coordinates the Pacific Basin activities; and (12) responsible for the administration of funds and other resources for grants, contracts, and cooperative agreements.

Office of Data and Information Management (RM7)

Provides national leadership in the identification and analysis of data needs and the utilization and implementation of a data strategy and program focusing on the promotion of health and prevention of disease among women of reproductive age; infants, children, adolescents and their families with special emphasis on the development and implementation of family-centered, comprehensive, care-coordinated; community-based and culturally competent systems of care for such population. Specifically: (1) develops, coordinates, and maintains a data and information system designed to improve implementation of Title V and other Bureau programs; (2) develops, coordinates, and implements systematic technical assistance and consultation on data and information systems, and evaluation approaches to State and local agencies and organizations or groups concerned with infants, children, adolescents, and children special health care needs; (3) through grants and contracts, provides support for a broad range of data collection, analyses and projects designed to improve the health status of infants, children, adolescents, and children with special health care needs; (4) coordinates and provides for a program of professional consultation and technical assistance through central and field office staff to State and local agencies and organizations; (5) develops, coordinates and disseminates data information; (6) plans, implements and monitors a system of placement of Federal employees assigned to the State health agencies; (7) coordinates and monitors the placement of CDC sponsored epidemiologist in State Agencies; and (8) provides for data program coordination at all levels of Bureau program operations through analyses of program data, trends and other issues concerning scientific and policy matters, the provision of health services and data and information related to the promotion of health and prevention of disease among infants, children, adolescents, and children with special health care needs.

Section RM–30 Delegations of Authority

All delegations and redelegations of authority which were in effect immediately prior to the effective date hereof have been continued in effect in them or their successors pending further redelegation. I hereby ratify and affirm all actions taken by any DHHS official which involved the exercise of these authorities prior to the effective date of this delegation.

This reorganization is effective upon date of signature.

Dated: March 25, 1999.

Claude Earl Fox,

Administrator.

[FR Doc. 99–8591 Filed 4–6–99; 8:45 am]

BILLING CODE 4160–15–M

DEPARTMENT OF THE INTERIOR

Office of the Secretary

Privacy Act of 1974; As Amended; Revisions to the Existing System of Records

AGENCY: Office of the Secretary, Department of the Interior.

ACTION: Proposed revisions to an existing system of record.

SUMMARY: In accordance with the Privacy Act of 1974, as amended (5 U.S.C. 552a), the Office of the Secretary is issuing public notice of its intent to modify an existing Privacy Act system of records notice, OS–52, ''Passport and Visa Records.'' The revisions will update the address of the system location and the system manager.

EFFECTIVE DATE: These actions will be effective on or before April 2, 1999.

FOR FURTHER INFORMATION CONTACT: Chief, Division of Financial Management Services, National Business Center, U.S. Department of the Interior, 1849 C Street NW, MS–1313 MIB, Washington, DC 20240.

SUPPLEMENTARY INFORMATION: In this notice, the Department of the Interior is amending OS–52, ''Passport and Visa Records,'' to update the address of the system location and system manager. Accordingly, the Department of the Interior proposed to amend the ''Passport and Visa Records,'' OS–52 system notice in its entirety to read:

Sue Ellen Sloca,

Office of the Secretary Privacy Act Officer, National Business Center.

INTERIOR/OS–52

SYSTEM NAME

Passport and Visa Records—Interior, OS–52

SYSTEM LOCATION:

Division of Financial Management Services, National Business Center, U.S. Department of the Interior, 1849 C Street NW, MS–1313 MIB, Washington, DC 20240.

CATEGORIES OF INDIVIDUALS COVERED BY THE SYSTEM:

(1) Employees of the Department of the Interior who travel on official business.

(2) Employees of independent agencies, councils, and commissions who are provided administrative support by the Department of the Interior who travel on official business.

(3) Individuals who travel on official business on behalf of the Department of the Interior.

CATEGORIES OF RECORDS IN THE SYSTEM:

Passports and visas.

AUTHORITY FOR MAINTENANCE OF THE SYSTEM:

22 U.S.C. 211a.

ROUTINE USES OF RECORDS MAINTAINED IN THE SYSTEM, INCLUDING CATEGORIES OF USERS AND THE PURPOSES OF SUCH USES:

The primary purpose of the system is to initiate, obtain and maintain passports and visas.

Disclosures outside the Department of the Interior may be made:

(1) To other Federal agencies, to transfer passports and visas.

(2) To the U.S. Department of Justice or in a proceeding before a court or adjudicative body when (a) the United States, the Department of the Interior, a component of the Department, or, when represented by the government, an employee of the Department is a party to litigation or anticipated litigation or has an interest in such litigation, and (b) the Department of the Interior determines that the disclosure is relevant or necessary to the litigation and is compatible with the purpose for which the records were compiled.

(3) To appropriate Federal, State, local or foreign agencies responsible for investigating or prosecuting the violation of or for enforcing or implementing a statute, rule, regulation, order or license, when the disclosing agency becomes aware of information indicating a violation or potential violation of a statute, rule, regulation, order or license.

(4) To a congressional office in connection with an inquiry an individual covered by the system has made to the congressional office.

POLICIES AND PRACTICES FOR STORING, RETRIEVING, ACCESSING, RETAINING, AND DISPOSING OF RECORDS IN THE SYSTEM:

STORAGE:

Passports and visas are stored in a locked safe.

RETRIEVABILITY:

Passports and visas are filed and retrieved by the name of the individual to whom they are assigned.

SAFEGUARDS:

Passports and visas are stored in a locked room in a manipulation-proof, three-way-combination-lock, steel safe. Access to records is granted only to authorized personnel.

RETENTION AND DISPOSAL:

General Records Schedule No. 9, Item No. 4.

SYSTEM MANAGER(S) AND ADDRESS:

Chief, Division of Financial Management Services, National Business Center, U.S. Department of the Interior, 1849 C Street NW, MS–1313 MIB, Washington, DC 20240.

NOTIFICATION PROCEDURES:

Inquiries regarding the existence of records shall be addressed to the System Manager. The request must be in writing, signed by the requester, and meet the content requirements of 43 CFR 2.60.

RECORD ACCESS PROCEDURES:

A request for access to records shall be addressed to the System Manager. The request must be in writing, signed by the requester, and meet the content requirements of 43 CFR 2.63.

CONTESTING RECORD PROCEDURES:

A request for amendment of records shall be addressed to the System Manager. The request must be in writing, signed by the requester, and meet the content requirements of 43 CFR 2.71.

RECORD SOURCE CATEGORIES:

Employees of the Department who travel on official business; employees of independent agencies, councils, and commissions who are provided administrative support by the Department who travel on official business; and individuals who travel on official business on behalf of the Department.

EXEMPTIONS CLAIMED FOR THE SYSTEM:

None.

[FR Doc. 99–8548 Filed 4–6–99; 8:45 am]

BILLING CODE 4310–RK–M

DEPARTMENT OF THE INTERIOR

Office of Aircraft Services

Privacy Act of 1974; As Amended; Revisions to the Existing System of Records

AGENCY: Office of Aircraft Services, Department of the Interior.

ACTION: Proposed revisions to an existing system of records.

SUMMARY: In accordance with the Privacy Act of 1974, as amended (5 U.S.C. 552a), the Office of Aircraft Services is issuing public notice of its intent to modify an existing Privacy Act system of records, DOI–07, ''Federal and Non-Federal Aviation Personnel, Equipment, and Mishap Information System.'' The revisions will reflect the reorganization of the Northwest Area Office and update the address of the Alaska Regional Office.

EFFECTIVE DATE: These actions will be effective April 7, 1999.

FOR FURTHER INFORMATION CONTACT: Director, Office of Aircraft Services, 2350 W. Robinson Road, Boise, Idaho 83705–5355.

SUPPLEMENTARY INFORMATION: The Office of Aircraft Services is amending the system notice for DOI–07, ''Federal and Non-Federal Aviation Personnel, Equipment, and Mishap Information System'' to reflect an organizational change within the agency. The Office of Aircraft Services' Northwest Area Office and Southwest Area Office were consolidated under one Area Director to form the West Area Office. Each office is identified by its geographical location, i.e., West Area Office—Boise and West Area Office—Phoenix. The notice is also being amended to update the address of the Alaska Regional Office. Accordingly, the Office Aircraft Services proposes to amend the ''Federal and Non-Federal Aviation Personnel, Equipment, and Mishap Information System,'' DOI–07, in its entirety to read as follows:

Sue Ellen Sloca,

Office of the Secretary Privacy Act Officer, National Business Center.

INTERIOR/DOI–07

SYSTEM NAME:

Federal and Non-Federal Aviation Personnel, Equipment, and Mishap Information System—Interior, DOI–07.

SYSTEM LOCATION:

(1) National headquarters: Office of the Director, Aviation Safety Office, Office of Aircraft Services, 2350 W. Robinson Road, Boise, Idaho 83705–5355.

(2) Office of Aircraft Services, Division of Technical Services, 2350 West Robinson Road, Boise, Idaho 83705–5355.

(3) Office of Aircraft Services, Alaska Regional Office, 4837 Aircraft Drive, Anchorage, Alaska 95502–1052.

(4) Office of Aircraft Services, West Area Office—Boise, 2741 Airport Way, Boise, Idaho 83705.

(5) Office of Aircraft Services, West Area Office—Phoenix, One West Deer Valley Road, Susite 204, Phoenix, Arizona 85027.

(6) Office of Aircraft Services, East Area Office, 1954 Airport Road, Suite 101, Chamblee, Georgia 30341.

CATEGORIES OF INDIVIDUALS COVERED BY THE SYSTEM:

(1) Professional, dual-function and incidental pilots, air crews, mechanics and ground personnel employed by Interior bureaus.

(2) Pilots, aircrews, mechanics, and ground personnel of commercial operators utilized by Interior bureaus.

(3) Pilots, aircrews, mechanics, and ground personnel of cooperating government agencies, organizations and private individuals.

CATEGORIES OF RECORDS COVERED BY THE SYSTEM:

The system contains information relative to certificates, qualifications, experience levels, training and proficiency, and performance of individuals. Identifying information pertaining to individuals includes name, birth date, and social security number of Federal Aviation Administration certificate number. The system also contains aviation mishap data pertaining to accidents, incidents, aviation hazards and maintenance deficiencies. This information includes accident summary, accident and other mishap reports, type of mishap, and pilot crewmember, and mechanic certificate number.

AUTHORITY FOR MAINTENANCE OF THE SYSTEM:

5 USC 301; Reorganization Plan 3 of 1950.

ROUTINE USES OF RECORDS MAINTAINED IN THE SYSTEM, INCLUDING CATEGORIES OF USERS AND THE PURPOSES OF SUCH USES:

The primary purposes of the system are:

(1) To determine if aircraft/crew/mechanic/ground personnel are in compliance with Office of Aircraft Services procedures and directives.

(2) To perform aircraft mishap trend analysis and develop statistical data for use in the Interior Aircraft Accident Prevention Program.

(1) To the U.S. Department of Justice or in a proceeding before a court or adjudicative body when, (a) the United States, the Department of the Interior, a component of the Department, or when represented by the government, an employee of the Department is a party to litigation or anticipated litigation or has an interest in such litigation, and (b) the Department of the Interior determines that the disclosure is relevant or necessary to the litigation and is compatible with the purpose for which the records were compiled.

(2) To appropriate Federal, State, local or foreign agencies responsible for investigating or prosecuting the violation of, or for enforcing or implementing a statute, rule, regulation, order, or license, when the disclosing agency becomes aware of a violation or potential violation of a statute, regulation, rule, order or license.

(3) To a Federal agency which has requested information necessary or relevant to the hiring, firing, or retention of an employee, or issuance of a security clearance, contract, license, pilot qualification card, grant or other benefit, but only to the extent that the information disclosed is relevant and necessary to the requesting agency's decision on the matter.

(4) To Federal, State, or local agencies or commercial businesses where necessary to obtain information relevant to the hiring or retention of an employee, or the issuance of a security clearance, license, pilot qualification card, grant or other benefit.

(5) To a congressional office in connection with an inquiry an individual covered by the system has made to the congressional office.

POLICIES AND PRACTICES FOR STORING, RETRIEVING, ACCESSING, RETAINING, AND DISPOSING OF RECORDS IN THE SYSTEM:

STORAGE:

Records are maintained manually, in file folders or on microfiche film, and/or electronically, in computer files.

RETRIEVABILITY:

(1) Records on Interior employees are indexed by name, date of birth, Social Security number, Federal Aviation Administration certificate number, agency, location duty classification, type of mishap, and accident summary.

(2) Records on commercial operator personnel are indexed by name, date of birth, Social Security number, Federal Aviation Administration certificate number, type of mishap, and accident summary.

(3) Records on cooperating government agencies, organizations, and private individuals are indexed by name, date of birth, Social Security number, Federal Aviation Administration certificate number, agency location, type of mishap and accident Summary

SAFEGUARDS:

Access to records is limited to Departmental employees who have an official need to use the records in the performance of their duties. When not in use by authorized personnel, paper and microfiche records are stored in locked file cabinets or in secured rooms. Electronically stored records are protected from unauthorized access through use of access codes, entry logs, and other system-based protection methods.

RETENTION AND DISPOSAL:

Records in this system are retained for seven (7) years and them destroyed.

SYSTEM MANAGER(S) AND ADDRESS:

(1) National headquarters: Office of Aircraft Services, Aviation Safety Office, 2350 W. Robinson Road, Boise, Idaho 83705–5355.

(2) Chief, Division of Technical Services, Office of Aircraft Services, 2350 W. Robinson Road, Boise, Idaho 84705–5355.

(3) Regional Director, Alaska Regional Office, Office of Aircraft Services, 4837 Aircraft Drive, Anchorage, Alaska 99502–1052.

(4) Area Director, West Area Office—Boise, Office of Aircraft Services, 2741 Airport Way, Boise, Idaho 83705.

(5) Office of Aircraft Services, West Area Office—Phoenix, One West Deer Valley Road, Suite 204, Phoenix, Arizona 85027.

(6) Area Director, East Area Office, Office of Aircraft Services, 1954 Airport Road, Suite 101, Chamblee, Georgia 30341.

NOTIFICATION PROCEDURE:

A request for notification of the existence of records shall be addressed to the appropriate System Manager. The request must be in writing, signed by the requestor, and comply with the content requirements of 43 CFR 2.60.

RECORD ACCESS PROCEDURES:

A request for access to records shall be addressed to the appropriate System Manager. The request must be in writing, signed by the requestor, and comply with the content requirements of 43 CFR 2.63.

CONTESTING RECORD PROCEDURES:

A request for amendment of a record shall be addressed to the appropriate System Manager. The request must be in writing, signed by the requestor, and comply with the content requirements of 43 CFR 2.71.

EXEMPTIONS CLAIMED BY THE SYSTEM:

None.

[FR Doc. 99–8549 Filed 4–6–99; 8:45 am]

BILLING CODE 4310–RM–M

DEPARTMENT OF THE INTERIOR

Office of the Secretary

Privacy Act of 1974; As Amended; Deletion of an Existing System of Records

AGENCY: Office of the Secretary, Department of the Interior.

ACTION: Proposed deletion of an existing system of records.

SUMMARY: In accordance with the Privacy Act of 1974, as amended (5 U.S.C. 552a), the Office of the Secretary is issuing public notice of its intent to delete an existing Privacy Act system of records notice, OS–87, ''Cash Receipts.''

EFFECTIVE DATE: This action will be effective April 7, 1999.

FOR FURTHER INFORMATION CONTACT: Chief, Division of Financial Management Services, National Business Center, U.S. Department of the Interior, 1849 C Street NW, MS–1313 MIB, Washington, D.C. 20240.

SUPPLEMENTARY INFORMATION: In this notice, the Department of the Interior is deleting OS–87, ''Cash Receipts,'' because a separate system of records, accessible by the names of individuals paying for goods or services in cash or receiving cash, is no longer being maintained by the National Business Center.

Sue Ellen Sloca,

Office of the Secretary Privacy Act Officer, National Business Center.

INTERIOR/OS–87

SYSTEM NAME:

Cash Receipts—Interior, OS–87.

ORIGINAL FEDERAL REGISTER PUBLICATION CITATION:

51 FR 25614, July 15, 1986.

REASON FOR DELETION:

The National Business Center no longer maintains a separate system of records relating to cash receipts from individuals and cash disbursements to individuals because it stopped transacting business in cash on October 1, 1998.

DISPOSITION OF RECORDS:

Records remaining from OS–87, ''Cash Receipts,'' that have not yet officially been sechduled for destruction, in accordance with General Records Schedule No. 6, Item No. 1, will be retained by the National Business Center until their official destruction date. Requests for notification of the existence of records on named individuals, access to records on named individuals, and amendment of records on named individuals that were filed in ''Cash Receipts,'' OS–87, which have not yet been destroyed, should be sent to the following address: Chief Division of Financial Management Services, National Business Center, U.S. Department of the Interior, 1849 C Street NW, MS–1313 MIB, Wasington, DC 20240.

[FR Doc. 99–8550 Filed 4–6–99; 8:45 am]

BILLING CODE 4310–RK–M

DEPARTMENT OF THE INTERIOR

Office of the Secretary

Privacy Act of 1974; As Amended; Revisions to the Existing System of Records

AGENCY: Office of the Secretary, Department of the Interior.

ACTION: Proposed revisions to an existing system of records.

SUMMARY: In accordance with the Privacy Act of 1974, as amended (5 U.S.C. 552a), the Office of the Secretary is issuing public notice of its intent to modify an existing Privacy Act system of records, OS–46, ''Secretarial Subject Files.'' The revisions will update the address of the system location and the system manager, and the storage, retrievability, safeguards, and records retention and disposal statements.

EFFECTIVE DATE: These actions will be effective on April 7, 1999.

FOR FURTHER INFORMATION CONTACT: Office of the Secretary Records Officer, Division of Technology Services, National Business Center, U.S. Department of the Interior, 1849 C Street NW, MS–1414 MIB, Washington, DC 20240.

SUPPLEMENTARY INFORMATION: The Office of the Secretary is amending OS–46, ''Secretarial Subject Files,'' to update the address of the system location and system manager and to more accurately describe how records contained in the system are stored, retrieved, safeguarded, retained and disposed of. Accordingly, the Department of the Interior proposes to amend the system notice for ''Secretarial Subject Files,'' OS–46 in its entirety to read as follows:

Sue Ellen Sloca,

Office of the Secretary Privacy Act Officer, National Business Center.

INTERIOR/OS–46

SYSTEM NAMED:

Secretarial Subject Files—Interior, OS–46.

SYSTEM LOCATION:

Division of Technology Services, National Business Center, U.S. Department of the Interior, 1849 C Street NW, MS–1414 MIB, Washington, DC 20240.

CATEGORIES OF INDIVIDUALS COVERED BY THE SYSTEM:

Individuals writing to or receiving correspondence from the following Department of the Interior officials: The Secretary, the Under Secretary, the Deputy Secretary, the Solicitor, the Assistant Secretaries, the Deputy

Assistant Secretaries, and individuals serving in these capacities.

CATEGORIES OF RECORDS IN THE SYSTEM:

Names of correspondents, date and subject of correspondence, official record copies of correspondence.

AUTHORITY FOR MAINTENANCE OF THE SYSTEM:

5 U.S.C. 391; 43 U.S.C. 1457; 44 U.S.C. 3101; Reorganization Plan 3 of 1950.

ROUTINE USES OF RECORDS MAINTAINED IN THE SYSTEM, INCLUDING CATEGORIES OF USERS AND THE PURPOSES OF SUCH USES:

The primary purpose of the system is to document and support the operational, program and policy decisions of Departmental officials at the Secretarial level. Disclosures outside the Department of the Interior may be made:

(1) To the U.S. Department of Justice or to a court or adjudicative body with jurisdiction when (a) the United States, the Department of the Interior, a component of the Department, or when represented by the government, an employee of the Department is a party to litigation or anticipated litigation or has an interest in such litigation, and (b) the Department of the Interior determines that the disclosure is relevant or necessary to the litigation and is compatible with the purpose for which the records were compiled.

(2) To appropriate Federal, State, local or foreign agencies responsible for investigation or prosecuting the violation of or for enforcing or implementing a statute, rule, regulation, order or license, when the disclosing agency becomes aware of information indicating a violation of or a potential violating of a statute, regulation, rule, order or license.

(3) To a congressional office in connection with an inquiry an individual covered by the system has made to the congressional office.

POLICIES AND PRACTICES FOR STORING, RETRIEVING, ACCESSING, RETAINING, AND DISPOSING OF RECORDS IN THE SYSTEM:

STORAGE:

Official record copies of correspondence are stored in file folders; an electronic copy of correspondence (dated January 1, 1997 or later) is stored in image files in a computer database. Index terms (for correspondence dated December 31, 1996 or earlier) are stored in index cards; index terms (for correspondence dated January 1, 1997 or later) are stored in a computer database.

RETRIEVABILITY:

Records are retrieved by name of correspondent and/or date or subject for correspondence.

SAFEGUARDS:

Official records copies of correspondence are stored in locked file cabinets, in a locked room. Computer image files are maintained in accordance with 43 CFR 2.51. Access to both paper and automated records is limited to persons whose official duties require such access.

RETENTION AND DISPOSAL:

Records are retained in accordance with the Office of the Secretary Comprehensive Records Disposal Schedule K–1. Official record copies of correspondence are stored on site for ten (10) years, at a Federal Records Center for an additional ten (10) years, and are offered to the National Archives and Records Administration for permentent retention after twenty (20) years.

SYSTEM MANAGER(S) AND ADDRESS:

Office of the Secretary Records Officer, Division of Technology Services, National Business Center, U.S. Department of the Interior, 1849 C Street NW. MS–1414 MIB, Washington, DC 20240.

NOTIFICATION PROCEDURES:

Inquires regarding the existence of records shall be addressed to the System Manager. The request must be in writing, signed by the requester, and meet the content requirements of 43 CFR 2.60.

RECORD ACCESS PROCEDURES:

A request for access to records shall be addressed to the System Manager. The request must be in writing, signed by the requester, and meet the content requirements of 43 CFR 2.63.

CONTESTING RECORD PROCEDURES:

A request for amendment of records shall be addressed to the System Manager. The requests must be writing, signed by the requester, and meet the content requirements of 43 CFR 2.71.

RECORD SOURCE CATEGORIES:

Individuals corresponding with or on behalf of the Department at the Secretarial level.

EXEMPTIONS CLAIMED FOR THE SYSTEM:

None.

[FR Doc. 99–8551 Filed 4–6–99; 8:45 am]

BILLING CODE 4310–RK–M

DEPARTMENT OF THE INTERIOR

Office of the Secretary

Privacy Act of 1974; As Amended; Revisions to the Existing System of Records

AGENCY: Office of the Secretary, Department of the Interior.

ACTION: Proposed revisions to an existing system of records.

SUMMARY: In accordance with the Privacy Act of 1974, as amended (5 U.S.C. 552a), the Office of the Secretary is issuing public notice of its intent to modify an existing Privacy Act system of records notice, OS–47, ''Parking Assignment Record.'' The revisions will update the address of the system location and the system manager.

EFFECTIVE DATE: These actions will be effective on April 7, 1999.

FOR FURTHER INFORMATION CONTACT: Parking Program Coordinator, Division of Facilities Management Services, National Business Center, U.S. Department of the Interior, 1849 C Street NW, MS–1210 MIB, Washington, DC 20240.

SUPPLEMENTARY INFORMATION: In this notice, the Department of the Interior is amending OS–47, ''Parking Assignment Record,'' to update the address of the system location and system manager. Accordingly, the Department of the Interior proposes to amend the ''Parking Assignment Record,'' OS–47 system notice in its entirety to read:

Sue Ellen Sloca,

Office of the Secretary Privacy Act Officer, National Business Center.

INTERIOR/OS–47

SYSTEM NAME:

Parking Assignment Records—Interior, OS–47.

SYSTEM LOCATION:

Division of Facilities Management Services, National Business Center, U.S. Department of the Interior, 1849 C Street NW, MS–1210 MIB, Washington, DC 20240.

CATEGORIES OF INDIVIDUALS COVERED BY THE SYSTEM:

Individuals requesting a parking permit or joining a carpool from both the Federal and private sector.

CATEGORIES OF RECORDS IN THE SYSTEM:

Name, Social Security number, telephone number at work, location of employment, service computation date (applicable to Federal employees only), home address, vehicle(s) make and model, State of vehicle registration,

license tag number, parking permit number, and number of carpool riders.

AUTHORITY FOR MAINTENANCE OF THE SYSTEM:

40 U.S.C. 471, et. seq., FMC 74–1 FPMR Temporary Regulation D–69.

ROUTINE USES OF RECORDS MAINTAINED IN THE SYSTEM, INCLUDING CATEGORIES OF USERS AND THE PURPOSES OF SUCH USES:

The primary purposes of the system are:

(1) To manage the assignment of parking permits.

(2) To assist individuals in locating carpools.

Disclosures outside the Department of the Interior may be made:

(1) To a Federal agency that has jurisdiction over parking spaces.

(2) To the U.S. Department of Justice or to a court or adjudicative body with jurisdiction when (a) the U.S. Department of the Interior, a component of the Department, or when represented by the Government, an employee of the Department is a party to litigation or anticipated litigation or has an interest in such litigation, and (b) the Department of the Interior determines that the disclosure is relevant or necessary to the litigation and is compatible with the purpose for which the records were compiled.

(3) To appropriate Federal, State, local or foreign agencies responsible for investigating or prosecuting the violation of or for enforcing or implementing a statute, rule, regulation, order or license, when the disclosing agency becomes aware of a potential violation of a statute, rule, regulation, order or license.

(4) To a congressional office in connection with an inquiry an individual covered by the system has made to the congressional office.

POLICIES AND PRACTICES FOR STORING, RETRIEVING, ACCESSING, RETAINING, AND DISPOSING OF RECORDS IN THE SYSTEM:

STORAGE:

Records are stored in a computer database.

RETRIEVABILITY:

By name of individual, Social Security number, telephone number at work, location of employment, service computation date (applicable to Federal employees only), zip code of home address, vehicle(s) make and model, State of vehicle registration, license tag number, parking permit number, and number of carpool riders.

SAFEGUARDS:

Records are maintained with safeguards meeting the requirements of 43 CFR 2.51 for computerized records.

RETENTION AND DISPOSAL:

Records are retained and disposed of in accordance with General Records Schedule No. 11, Item No. 4.

SYSTEM MANAGER(S) AND ADDRESS:

Parking Program Coordinator, Division of Facilities Management Services, National Business Center, U.S. Department of the Interior, 1849 C Street NW, MS–1210 MIB, Washington, DC 20240.

NOTIFICATION PROCEDURE:

Inquiries regarding the existence of records shall be addressed to the System Manager. The request must be in writing, signed by the requester, and meet the content requirements of 43 CFR 2.60.

RECORD ACCESS PROCEDURES:

A request for access to records shall be addressed to the System Manager. The request must be in writing, signed by the requester, and meet the content requirements of 43 CFR 2.63.

CONTESTING RECORD PROCEDURES:

A request for amendment of records shall be addressed to the System Manager. The request must be in writing, signed by the requester, and meet the content requirements of 43 CFR 2.71.

RECORD SOURCE CATEGORIES:

Individuals requesting a parking permit or joining a carpool.

EXEMPTIONS CLAIMED FOR THE SYSTEM:

None.

[FR Doc. 99–8552 Filed 4–6–99; 8:45 am]

BILLING CODE 4310–RK–M

DEPARTMENT OF THE INTERIOR

Office of the Secretary

Privacy Act of 1974; As Amended; Revisions to the Existing System of Records

AGENCY: Office of the Secretary, Department of the Interior.

ACTION: Proposed revisions to an existing system of records.

SUMMARY: In accordance with the Privacy Act of 1974, as amended (5 U.S.C. 552a), the Office of the Secretary is issuing public notice of its intent to modify an existing Privacy Act system of records notice, OS–86, ''Accounts Receivable.'' The revisions will update the address of the system location and system manager.

EFFECTIVE DATE: These actions will be effective April 7, 1999.

FOR FURTHER INFORMATION CONTACT: Chief, Division of Financial Management Services, National Business Center, U.S. Department of the Interior, 1849 C Street NW, MS–1313 MIB, Washington, DC 20240.

SUPPLEMENTARY INFORMATION: In this notice, the Department of the Interior is amending OS–86, ''Accounts Receivable,'' to update the address of the system location and system manager. Accordingly, the Department of the Interior proposes to amend the ''Accounts Receivable,'' OS–86 system notice in its entirety to read:

Sue Ellen Sloca,

Office of the Secretary Privacy Act Officer, National Business Center.

INTERIOR/OS–86

SYSTEM NAME:

Accounts Receivable—Interior, OS–86.

SYSTEM LOCATION:

Divisional of Financial Management Services, National Business Center, U.S. Department of the Interior, 1848 C Street NW, MS–1313 MIB, Washington, DC 20240.

CATEGORIES OF INDIVIDUALS COVERED BY THE SYSTEM:

Individuals owing money to the Office of the Secretary, including employees of the Department, former employees of the Department, business firms, institutions, and private citizens.

Note: Most of the records in this system which are pertain to individuals contain information about ''sole proprietorships.'' However, some of the records which pertain to individuals also contain personal information. Only those records containing personal information are subject to the Privacy Act. The manual and automated filing systems in which these records are maintained also contain records concerning corporations and other business entities or organizations. These records, which do not pertain to individuals, are not subject to the Privacy Act.

CATEGORIES OF RECORDS IN THE SYSTEM:

Name, address, amount of money owed, basis for inclusion in system (including itemization of goods and services received or provided, and/or overpayments or under payments made by them or provided to them.)

AUTHORITY FOR MAINTENANCE OF THE SYSTEM:

(1) U.S.C. 5710–09. (2) FPMR 101–7. (3) Treasury Fiscal Requirements Manual. (4) 31 U.S.C. 3711.

ROUTINE USES OF RECORDS MAINTAINED IN THE SYSTEM, INCLUDING CATEGORIES OF USERS AND THE PURPOSES OF SUCH USES:

The primary purpose of the system is to bill debtors for amounts owed and to follow-up on unpaid debts.

Disclosure outside the Department of the Interior may be made:

(1) To the U.S. Department of Justice or to a court or adjudicative body with jurisdiction when (a) the United States, the Department of the Interior, a component of the Department, or when represented by the government, an employee of the Department is a party to litigation or anticipated litigation or has an interest in such litigation, and (b) the Department of the Interior determines that the disclosure is relevant or necessary to the litigation and is compatible with the purpose for which the records were compiled.

(2) To appropriate Federal, state, local or foreign agencies responsible for investigating or prosecuting the violation of or for enforcing or implementing a statute, rule, regulation, order or license when the disclosing agency becomes aware of information indicating a violation or potential violation of a statute, rule, regulation, order or license.

(3) To a congressional office in connection with an inquiry an individual covered by the system has made to a congressional office.

(4) To disclose debtor information to the Internal Revenue Service, or to another Federal agency or its contractor, solely to aggregate information for the Internal Revenue Service, to collect debts owed the Federal government through the offset of tax refunds.

DISCLOSURE TO CONSUMER REPORTING AGENCIES:

Disclosure pursuant to 5 U.S.C. 552a(b)(12). Pursuant to 5 U.S.C. 552a(b)(12), disclosures may be made to a consumer reporting agency as defined in the Fair Credit Reporting Act (15 U.S.C. 1681a(f)) or the Federal Claims Collection Act of 1966 (31 U.S.C. 3701(a)(3)).

POLICIES AND PRACTICES FOR STORING, RETRIEVING, ACCESSING, RETAINING, AND DISPOSING OF RECORDS IN THE SYSTEM:

STORAGE:

Records are maintained in manual and electronic form.

RETRIEVABILITY:

Records are retrieved by appropriation or fund to be credited.

SAFEGUARDS:

Manual records are stored in a locked room when not in active use. Automated records are maintained with safeguards meeting the requirements of 43 CFR 2.51 for computerized records.

RETENTION AND DISPOSAL:

Records are retained and disposed of in accordance with General Records Schedule No. 6, Item No. 1.

SYSTEM MANGER(S) AND ADDRESS:

Chief, Division of Financial Management Services, National Business Center, U.S. Department of the Interior, 1848 C Street NW, MS–1313 MIB, Washington, DC 20240.

NOTIFICATION PROCEDURES:

Inquiries regarding the existence of records shall be addressed to the System Manager. The request must be in writing, signed by the requester, and meet the content requirements of 43 CFR 2.60.

RECORD ACCESS PROCEDURES:

A request for access to records shall be addressed to the System Manager. The request must be in writing, signed by the requester, and meet the content requirements of 43 CFR 2.63.

CONTESTING RECORD PROCEDURES:

A request for amendment of records shall be addressed to the System Manager. The request must be in writing, signed by the requester, and meet the content requirements of 43 CFR 2.71.

RECORD SOURCE CATEGORIES:

Individuals owing money to the Office of the Secretary and relevant accounting records.

EXEMPTIONS CLAIMED FOR THE SYSTEM:

None.

[FR Doc. 99–8553 Filed 4–6–99; 8:45 am]

BILLING CODE 4310–RK–M

DEPARTMENT OF THE INTERIOR

Office of the Secretary

Privacy Act of 1974; As amended; Revisions to the Existing System of Records

AGENCY: Office of the Secretary, Department of the Interior.

ACTION: Proposed revisions to an existing system of records.

SUMMARY: In accordance with the Privacy Act of 1974, as amended (5 U.S.C. 552a), the Office of the Secretary is issuing public notice of its intent to modify an existing Privacy Act system of records notice, OS–69, ''Freedom of Information Appeal Files.'' The revisions will update the name of the system and address of the system location and system manager.

EFFECTIVE DATE: These actions will be effective on May 7, 1999.

FOR FURTHER INFORMATION CONTACT: Department Freedom of Information Act Appeals Officer, Office of Information Resources Management, MS–5312 MIB, 1849 C Street NW, Washington, DC 20240.

SUPPLEMENTARY INFORMATION: The Department of the Interior is proposing to amend the system notice for OS–69, ''Freedom of Information Appeal Files,'' to more accurately identify the system of records and to update the address of the system location and system manager. Accordingly, to the Department of the Interior proposes to amend the ''Freedom of Information Appeal Files,'' OS–69, in its entirety to read as follows:

Sue Ellen Sloca,

Office of the Secretary Privacy Act Officer, National Business Center.

INTERIOR/OS–69

Freedom of Information Act Appeals Files—Interior, OS–69.

SYSTEM LOCATION:

U.S. Department of the Interior, Office of Information Resources Management, MS–5312 MIB,m 1849 C Street NW, Washington, DC 20240.

CATEGORIES OF INDIVIDUALS COVERED BY THE SYSTEM:

Individuals who have filed appeals under Department of the Interior Freedom of Information Act (FOIA) appeal procedures.

CATEGORIES OF RECORDS IN THE SYSTEM:

FOIA appeals, FOIA requests and decisions on requests issued by bureaus and offices, records which track the processing of FOIA appeals, extension-of-time letters and related records, recommendations of the Office of the Solicitor and of other Department officials on appeals; and final decisions on appeals.

AUTHORITY FOR MAINTENANCE OF THE SYSTEM:

5 U.S.C. 552.

ROUTINE USES OF RECORDS MAINTAINED IN THE SYSTEM, INCLUDING CATEGORIES OF USERS AND THE PURPOSES OF SUCH USES:

The primary purposes of the system are:

(1) To support action on FOIA appeals.

(2) To gather information for management and reporting purposes.

Disclosure outside the Department of the Interior may be made:

(1) To other Federal agencies having a subject matter interest in an appeal of a decision on a request.

(2) To the U.S. Department of Justice or in a proceeding before a court or adjudicative body when (a) the United States, the Department of the Interior, a component of the Department, or, when represented by the Government, an employee of the Department is a party to litigation or anticipated litigation or has an interest in such litigation, and (b) the Department of the Interior determines that the disclosure is relevant or necessary to the litigation and is compatible with the purpose for which the records were compiled.

(3) To appropriate Federal, State, local, or foreign agencies responsible for investigating or prosecuting the violation or for enforcing or implementing the statute, rule, regulation, order, or license, when the disclosing agency becomes aware of information indicating a violation or potential violation of a statute, regulation, rule, order, or license.

(4) To a congressional office in connection with an inquiry an individual covered by the system has made to the congressional office.

POLICIES AND PRACTICES FOR STORING, RETRIEVING, ACCESSING, RETAINING, AND DISPOSING OF RECORDS IN THE SYSTEM:

STORAGE:

Appeal records are maintained in manual form in file folders. Appeal tracking information is maintained in computerized form on magnetic media.

RETRIEVABILITY:

Manual records are indexed by appeal number. A cross-reference list permits retrieval of records by appellant's name. Computer records are indexed by name of appellant, appeal number, date and subject of appeal.

SAFEGUARDS:

Records are maintained with safeguards meeting the requirements of 43 CFR 2.51.

RETENTION AND DISPOSAL:

Records are destroyed six years after final determination by agency, or three years after final adjudication by courts, in accordance with General Records Schedule No. 14, Item 12.

SYSTEM MANAGER(S) AND ADDRESS:

Freedom of Information Act Appeals Officer, U.S. Department of the Interior, Office of Information Resources Management, MS–5312 MIB, 1849 C Street NW, Washington, DC 20240.

NOTIFICATION PROCEDURES:

A request for notification of the existence of records shall be addressed to the System Manager. The request shall be in writing, signed by the requester, and comply with the content requirements of 43 CFR 2.60.

RECORD ACCESS PROCEDURES:

A request for access to records shall be addressed to the System Manager. The request shall be in writing, signed by the requester, and comply with the content requirements of 43 CFR 2.63.

CONTESTING RECORDS PROCEDURES:

A request for amendment of a record shall be addressed to the System Manager. The request shall be in writing, signed by the requester, and comply with the content requirements of 43 CFR 2.71.

RECORD SOURCE CATEGORIES:

Appellants; bureau, office and Department officials.

EXEMPTIONS CLAIMED FOR THE SYSTEM:

None.

[FR Doc. 99–8554 Filed 4–6–99; 8:45 am]
BILLING CODE 4310–RK–M

DEPARTMENT OF THE INTERIOR

Office of the Secretary

Privacy Act of 1974; As amended; Revisions to the Existing System of Records

AGENCY: Office of the Secretary, Department of the Interior.

ACTION: Proposed revisions to an existing system of records.

SUMMARY: In accordance with the Privacy Act of 1974, as amended (5 U.S.C. 552a), the Office of the Secretary is issuing public notice of its intent to modify an existing Privacy Act system of records notice, OS–71, ''Freedom of Information Request Files System.'' The revisions will update the system name and number, the routine uses of records in the system, the addresses of the system locations and system managers, the description of categories of records in the system, the retention and disposal statement, and the record source categories.

EFFECTIVE DATE: These actions will be effective on April 7, 1999.

FOR FURTHER INFORMATION CONTACT: Departmental Freedom of Information Act Officer, Office of Information Resources Management, MS–5312 MIB, 1849 C Street NW., Washington, DC 20240.

SUPPLEMENTARY INFORMATION: In this notice, the Department of the Interior is amending the system notice for OS–71, ''Freedom of Information Request Files System,'' to more accurately describe the Department-wide scope of the system of records and to more accurately identify the categories of records in the system; to update the routine uses of the data in the system to include disclosures to debt collection agencies, disclosures to other Federal agencies as required in performance of official duties in support of functions compatible with the collection of the data, and disclosures to a consumer reporting agency; to update the retention and disposal statement to reflect the current authority for retention; and to update the addresses of the system locations and system managers. Accordingly, the Department of the Interior proposes to amend the ''Freedom of Information Act Request Files System, OS–71'' in its entirety to read as follows:

Sue Ellen Sloca,

Office of the Secretary, Privacy Act Officer, National Business Center.

INTERIOR/DOI–71

SYSTEM NAME:

Freedom of Information Act Request Files—Interior, DOI–71.

SYSTEM LOCATION:

(1) U.S. Department of the Interior, Office of Information Resources Management, MS–5312 MIB, 1849 C Street, NW, Washington, DC 20240.

(2) Offices of Freedom of Information Act (FOIA) Officers for each of the Department's bureaus. (Consult the Appendix for addresses of bureau FOIA Officers.)

(3) Offices of other officials, nationwide, authorized to receive and respond to FOIA requests.

CATEGORIES OF INDIVIDUALS COVERED BY THE SYSTEM:

Individuals who have submitted FOIA requests under Department of the Interior FOIA procedures.

CATEGORIES OF RECORDS IN THE SYSTEM:

FOIA requests, responses to FOIA requests, and related records; copies of subject documents; records which track the processing of FOIA requests and other records pertaining to the administration of the FOIA program.

AUTHORITY FOR MAINTENANCE OF THE SYSTEM:

5 U.S.C. 552.

ROUTINE USES OF RECORDS MAINTAINED IN THE SYSTEM, INCLUDING CATEGORIES OF USERS AND THE PURPOSES OF SUCH USES:

The primary purposes of the system are:

(1) To support action on FOIA requests, appeals, and litigation.

(2) To gather information for management and reporting purposes.

(3) To administer the FOIA program.

Disclosure outside the Department of the Interior may be made:

(1) To other Federal, State, and local agencies with a subject matter interest in a request, or an appeal on or litigation of a decision on a request.

(2) To the U.S. Department of Justice or in a proceeding before a court or adjudicative body when (a) the United States, the Department of the Interior, a component of the Department, or, when represented by the Government, an employee of the Department is a party to litigation or anticipated litigation or has an interest in such litigation, and (b) the Department of the Interior determines that the disclosure is relevant or compatible with the purposes for which the records were compiled.

(3) To appropriate Federal, State, local, or foreign agencies responsible for investigating or prosecuting a violation or enforcing or implementing a statute, rule, regulation, order, or license, when the disclosing agency becomes aware of information indicating a violation or potential violation of a statute, regulation, rule, order, or license.

(4) To a congressional office in connection with an inquiry an individual covered by the system has made to the congressional office.

(5) To a debt collection agency for the purpose of collecting outstanding debts owed to the Department for fees associated with processing FOIA requests.

(6) To an official of another Federal agency to provide information needed in the performance of official duties related to reconciling or reconstructing data files, in support of the functions for which the records were collected and maintained.

DISCLOSURE TO CONSUMER REPORTING AGENCIES:

Disclosures pursuant to 5 U.S.C. 552a(b)(12). Pursuant to 5 U.S.C. 552a(b)(12), disclosures may be made to a consumer reporting agency as defined in the Fair Credit Reporting Act (15 U.S.C. 1681a(f)) or the Federal Claims Collection Act of 1966 (31 U.S.C. 371(a)(3)).

POLICIES AND PRACTICES FOR STORING, RETRIEVING, ACCESSING, RETAINING, AND DISPOSING OF RECORDS IN THE SYSTEM:

STORAGE:

Records are maintained in manual and electronic format.

RETRIEVABILITY:

Records are retrieved by the name of the requester.

SAFEGUARDS:

Records are maintained with safeguards meeting the requirements of 43 CFR 2.51.

RETENTION AND DISPOSAL:

Records are retained and disposed of in accordance with General Records Schedule No. 14, Items 11 and 13, or equivalent items in bureau records schedules.

SYSTEM MANAGER(S) AND ADDRESS:

(1) Departmental FOIA Officer, U.S. Department of the Interior, Office of Information Resources Management, MS–5312 MIB, 1849 C Street, NW, Washington, DC 20240.

(2) Bureau FOIA Officers. (Consult the Appendix for addresses of bureau FOIA Officers.)

NOTIFICATION PROCEDURE:

A request for notification of the existence of records must be addressed to the appropriate System Manager. The request must be in writing, signed by the requester, and comply with the content requirements of 43 CFR 2.60.

RECORD ACCESS PROCEDURES:

A request for access must be addressed to the appropriate System Manager. The request must be in writing, signed by the requester, and comply with the content requirements of 43 CFR 2.63.

CONTESTING RECORD PROCEDURE:

A request for an amendment of a record must be addressed to the appropriate System Manager. The request must be in writing, signed by the requester, and comply with the content requirements of 43 CFR 2.71.

RECORD SOURCE CATEGORIES:

Individuals filing FOIA requests; Departmental officials (and officials of the Department of Justice) acting on requests, appeals, litigation and reporting requirements; and submitters of commercial and financial information.

EXEMPTIONS CLAIMED FOR THE SYSTEM:

None.

[FR Doc. 99–8555 Filed 4–6–99; 8:45 am]

BILLING CODE 4310–RK–M

DEPARTMENT OF THE INTERIOR

Office of the Secretary

Privacy Act of 1974; As Amended; Revisions to the Existing Systems of Records

AGENCY: Office of the Secretary, Department of the Interior.

ACTION: Proposed revisions to an existing system of records.

SUMMARY: In accordance with the Privacy Act of 1974, as amended (5 U.S.C. 552a), the Office of the Secretary is issuing public notice of its intent to modify an existing Privacy Act system of records notice, OS–35, ''Library Circulation Control System.'' The revisions will update the address of the system location and system manager.

EFFECTIVE DATE: These actions will be effective April 7, 1999.

FOR FURTHER INFORMATION CONTACT: Library Contractor COTR, Division of Employee and Public Services, National Business Center, U.S. Department of the Interior, 1849 C Street NW, Washington, DC 20240.

SUPPLEMENTARY INFORMATION: In this notice, the Department of the Interior is amending OS–35, ''Library Circulation Control System,'' to update the address of the system location and system manager. Accordingly, the Department of the Interior proposes to amend the ''Library Circulation Control System,'' OS–35 in its entirety to read as follows:

Sue Ellen Sloca,

Office of the Secretary Privacy Act Officer, National Business Center.

INTERIOR/OS–35

SYSTEM NAME:

Library Circulation Control System—Interior, OS–35.

SYSTEM LOCATION:

U.S. Department of the Interior Library, 1849 C Street NW, Washington, DC 20240.

CATEGORIES OF INDIVIDUALS COVERED BY THE SYSTEM:

Individuals borrowing library materials from the Department of the Interior library.

CATEGORIES OF RECORDS IN THE SYSTEM:

Name and identification number of borrower; affiliation of borrower; work address and telephone number of borrower, call number and due date of items borrowed; other information identifying items borrowed.

AUTHORITY FOR MAINTENANCE OF THE SYSTEM:

43 U.S.C. 67a. 1456, 1467; 40 U.S.C. 483(b); 44 U.S.C. 3101.

ROUTINE USES OF RECORDS MAINTAINED IN THE SYSTEM, INCLUDING CATEGORIES OF USERS AND THE PURPOSES OF SUCH USES:

The primary purpose of the system is to control library materials borrowed. Disclosures outside the Department of the Interior may be made:

(1) To the U.S. Department of Justice or in a proceeding before a court or adjudicative body when (a) the United States, the Department of the Interior, a component of the Department or when represented by the Government, an employee of the Department is a party to litigation or anticipated litigation or has an interest in such litigation, and (b) the Department of the Interior determines that the disclosure is relevant or necessary to the litigation and is compatible with the purpose for which the records were compiled.

(2) To a congressional office in connection with an inquiry an individual covered by the system has made to the congressional office.

(3) To Federal, State, or local agencies that have requested information necessary or relevant to the hiring, firing or retention of an employee, or the issuance of a security clearance, contract, license, grant or other benefit.

(4) To appropriate Federal, State, local or foreign agencies responsible for investigating or prosecuting the violation of or for enforcing, implementing or administering a statute, rule, regulation, order, license, contract, grant or other agreement, when the disclosing agency becomes aware of information indicating a violation or potential violation of a statute, regulation, rule, order, license, contract, grant or other agreement.

POLICIES AND PRACTICES FOR STORING, RETRIEVING, ACCESSING, RETAINING, AND DISPOSING OF RECORDS IN THE SYSTEM:

STORAGE:

Records are maintained in computer data files.

RETRIEVABILITY:

Records are retrievable by name or identification number of borrower, and by call number, due date, or other information relating to items borrowed.

SAFEGUARDS:

Records are maintained in computer files, within the library, and are accessible only by authorized persons. Computers allowing access to records are attended constantly during working hours; the library is locked after working hours.

RETENTION AND DISPOSAL:

Records are maintained for two years and then destroyed in accordance with instructions contained in the Office of the Secretary Administrative Handbook Number 7.

SYSTEM MANAGER(S) AND ADDRESS:

Library Contractor COTR, Division of Employee and Public Services, National Business Center, U.S. Department of the Interior, 1849 C Street NW, Washington, DC 20240.

NOTIFICATION PROCEDURES:

Inquiries regarding the existence of records shall be addressed to the System Manager. The request must be in writing, signed by the requester, and meet the content requirements of 43 CFR 2.60.

RECORD ACCESS PROCEDURES:

A request for access to records shall be addressed to the System Manager. The request must be in writing, signed by the requester, and meet the content requirements of 43 CFR 2.63.

CONTESTING RECORD PROCEDURES:

A request for access to records shall be addressed to the System Manager. The request must be in writing, signed by the requester, and meet the content requirements of 43 CFR 2.71.

RECORD SOURCE CATEGORIES:

Individuals borrowing materials from Departmental Library and materials borrowed from the Library.

EXEMPTIONS CLAIMED FOR THE SYSTEM:

None.

[FR Doc. 99–8556 Filed 4–6–99; 8:45 am]
BILLING CODE 4310–RK–M

DEPARTMENT OF THE INTERIOR

Office of the Secretary

Privacy Act of 1974; As Amended; Revisions to the Existing System of Records

AGENCY: Office of the Secretary, Department of the Interior.

ACTION: Proposed revisions to an existing system of records.

SUMMARY: In accordance with the Privacy Act of 1974, as amended (5 U.S.C. 552a), the Office of the Secretary is issuing public notice of its intent to modify an existing Privacy Act system of records notice, OS–45, ''Security Clearance Files and Other Reference Files.'' The revisions will update the name of the system, the address of the system location and system manager, and the record storage statement.

EFFECTIVE DATE: These actions will be effective on April 7, 1999.

FOR FURTHER INFORMATION CONTACT: Security Manager, Division of Employee and Public Services, National Business Center, U.S. Department of the Interior, 1849 C Street NW, MS–1226 MIB, Washington, DC 20240.

SUPPLEMENTARY INFORMATION: In this notice, the Department of the Interior is amending OS–45, ''Security Clearance Files and Other Reference Files'' to update the name of the system to describe it more accurately and to update the address of the system location and system manager and the record storage statement to reflect changes that have occurred since the notice was last published. Accordingly, the Department of the Interior proposes to amend the system notice for ''Security Clearance Files and Other Reference Files,'' OS–45 in its entirety to read as follows:

Sue Ellen Sloca,

Office of the Secretary Privacy Act Officer, National Business Center.

INTERIOR/OS–45

SYSTEM NAME:

Personnel Security Files—Interior, OS–45.

SYSTEM LOCATION:

Division of Employee and Public Services, National Business Center, U.S. Department of the Interior, 1849 C Street NW, MS–1226 MIB, Washington, DC 20240.

CATEGORIES OF INDIVIDUALS COVERED BY THE SYSTEM:

Employees in the Office of the Secretary, Bureau heads, Bureau Security Officers, and employees of other Departmental offices and of independent agencies, councils and commissions (which are provided administrative support), whose duties have been designated ''special sensitive,'' ''critical sensitive,'' ''noncritical sensitive'' or ''clearance for FEMA special access program.''

CATEGORIES OF RECORDS IN THE SYSTEM:

Copies of form SF–85, SF–86, of SF–171 as supplied by individuals covered by the system, copies of letters of transmittal between the Department of the Interior and the Office of Personnel Management concerning the individual's background investigation; copies of certification of clearance status and briefings and/or copies of debriefing certificates signed by individual, as appropriate. Card files contain case file summaries, case numbers and dispositions of case files following review.

AUTHORITY FOR MAINTENANCE OF THE SYSTEM:

Executive Order 10450.

ROUTINE USES OF RECORDS MAINTAINED IN THE SYSTEM, INCLUDING CATEGORIES OF USERS AND THE PURPOSES OF SUCH USES.

The primary purposes of the system are:

(1) To identify Office of the Secretary personnel who have been granted a security clearance.

(2) To identify heads of Bureaus and their respective Security Officers who have been granted a security clearance.

(3) To identify persons in a pending clearance status awaiting the results and adjudication of Office of Personnel Management investigations.

(4) To identify persons whose clearance has been terminated in the last five years due to an administrative down-grading, a transfer to another agency, employment at another agency, or retirement.

Disclosures outside the Department of the Interior may be made:

(1) To the U.S. Department of Justice or in a proceeding before a court or adjudicative body when (a) the United States, the Department of the Interior, a component of the Department, or when represented by the government, an employee of the Department is a party to litigation or anticipated litigation or has an interest in such litigation, and (b) the Department of the Interior determines that the disclosure is relevant or necessary to the litigation and is compatible with the purpose for which the records were compiled.

(2) To appropriate Federal, State, local or foreign agencies responsible for investigating or prosecuting the violation or for enforcing, implementing, or administering a statute, rule, regulation, order or license, when the disclosing agency becomes aware of information indicating a violation or potential violation of a statute, regulation, rule, order or license.

(3) To a congressional office in connection with an inquiry an individual covered by the system has made to the congressional office.

(4) To Federal, State, or local agencies that have requested information relevant or necessary to the hiring, firing or retention of an employee, or the issuance of a security clearance, license, contract, grant or other benefit.

(5) To Federal, State or local agencies where necessary to obtain information relevant to the hiring or retention of an employee or the issuance of a security clearance, license, contract, grant or other benefit.

(6) To the Office of Personnel Management for matters concerned with oversight activities (necessary for the Office of Personnel Management to carry out its legally-authorized Government-wide personnel management programs and functions.)

POLICIES AND PRACTICES FOR STORING, RETRIEVING, ACCESSING, RETAINING, AND DISPOSING OF RECORDS IN THE SYSTEM:

STORAGE:

Paper copies of records are maintained in file folders. Electronic records are stored on a non-removable hard disk. Back-up records are stored on removable diskettes.

RETRIEVABILITY:

Records are indexed by name of employee or covered individual.

SAFEGUARDS:

Records are stored in a locked room. Access to records is permitted only to cleared personnel on official business.

RETENTION AND DISPOSAL:

Records are maintained and disposed of in accordance with General Records Schedule No. 18, Item No. 23.

SYSTEM MANAGER(S) AND ADDRESS:

Security Manager, Division of Employee and Public Services, National Business Center, Department of the Interior, 1849 C Street NW, MS–1226, Washington, DC 20240.

NOTIFICATION PROCEDURE:

A request for notification of the existence of records shall be addressed to the System Manager. The request must be in writing, signed by the requester, and comply with the content requirements of 43 CFR 2.60.

RECORD ACCESS PROCEDURE:

A request for access shall be addressed to the System Manager. The request must be in writing, signed by the requester, and comply with the content requirements of 43 CFR 2.63.

CONTESTING RECORD PROCEDURE:

A request for an amendment of a record shall be addressed to the System Manager. The request must be in writing, signed by the requester, and comply with the content requirements of 43 CFR 2.71.

RECORD SOURCE CATEGORIES:

Individuals covered by the system. Other Federal agencies supplying data on individuals covered by the system.

EXEMPTIONS CLAIMED FOR THE SYSTEM:

None.

[FR Doc. 99–8557 Filed 4–6–99; 8:45 am]

BILLING CODE 4310–RK–M

DEPARTMENT OF THE INTERIOR

Office of Aircraft Services

Privacy Act of 1974; As Amended; Revisions to the Existing System of Records

AGNENCY: Office of Aircraft Services, Department of the Interior.

ACTION: Proposed revisions to an existing system of records.

SUMMARY: In accordance with the Privacy Act of 1974, as amended (5 U.S.C. 552a), the Office of Aircraft Services is issuing public notice of its intent to modify an existing Privacy Act system of records, OS–8, ''Aircraft Services Administrative Management and Fiscal Records.'' The revisions will update the name and number of the system and the addresses of the system locations and system manager.

EFFECTIVE DATE: These actions will be effective April 7, 1999.

FOR FURTHER INFORMATION CONTACT: Director, Office of Aircraft Service, 2350 W. Robinson Road, Boise, Idaho 83704–5355.

SUPPLEMENTARY INFORMATION: The Office of Aircraft Services is amending OS–8, ''Aircraft Services Administrative Management and Fiscal Records,'' to more accurately reflect the organizational placement of the system within the Department of the Interior's Privacy Act program and to update the addresses of the system locations in the national headquarters and regional office and the address of the system manager. Accordingly, the Office of Aircraft Services proposes to amend ''Aircraft Services Administrative Management and Fiscal Records,'' OS–8 in its entirety to read as follows:

Sue Ellen Sloca,

Office of the Secretary, Privacy Act Officer, National Business Center.

INTERIOR/OAS–02

SYSTEM NAME:

Aircraft Services Administrative and Fiscal Records—Interior, OAS–02.

SYSTEM LOCATION:

(1) National headquarters: Office of Aircraft Services, 2350 W. Robinson Road, Boise, Idaho 83705–5355.

(2) Regional office: Office of Aircraft Services, Alaska Regional Office, 4837 Aircraft Drive, Anchorage, Alaska 95502–1052.

CATEGORIES OF INDIVIDUALS COVERED BY THE SYSTEM:

Employees of the Office of Aircraft Services.

CATEGORIES OF RECORDS COVERED BY THE SYSTEM:

(1) Payroll records, including pay, leave and cost distribution records, along with deductions for bonds, insurance, income taxes, allotments to financial institutions, overtime, authorizations, and related documents.

(2) Travel records, including administrative approvals, travel expenses claimed and/or paid, receipts for expenditure claims, government transportation requests, travel advance accounts and related records.

(3) Records of accountability for Government-owned property.

(4) Safety records, including claims under the Military Personnel and Civil Employees Claims Act.

(5) Government identification card records.

(6) Government driver's license records.

(7) Other administrative and fiscal management records.

AUTHORITY FOR MAINTENANCE OF THE SYSTEM:

5 U.S.C. 301; 3101, 5101–5115, 5501–5596, 5701–5709, 31 U.S.C. 66a 240–243, 40 U.S.C. 483(b), 43 U.S.C. 1467, 44 U.S.C. 3103, Executive Order No. 11807.

ROUTINE USES OF RECORDS MAINTAINED IN THE SYSTEM, INCLUDING CATEGORIES OF USERS AND THE PURPOSES OF SUCH USES:

The primary purpose of the system is to support the administrative and fiscal management of the Office of Aircraft Services. Disclosure outside the Department of the Interior may be made:

(1) To the U.S. Department of the Treasury for preparation of (a) payroll checks, (b) payroll deduction and other checks to Federal, State and local agencies, and (c) checks for reimbursement of employees and others.

(2) To the Internal Revenue Service and to State, Commonwealth, Territorial, and local governments for tax purposes.

(3) To the Civil Service Retirement System and to other employee retirement programs.

(4) To other agencies having a subject matter interest in the records.

(5) To the U.S. Department of Justice or to a court or adjudicative body with jurisdiction when (a) the United States, the Department of the Interior, a component of the Department, or, when represented by the government, an employee of the Department is a party to litigation or anticipated litigation or has an interest in such litigation, and (b) the Department of the Interior determines that the disclosure is relevant or necessary to the litigation and is compatible with the purpose for which the records were compiled.

(6) To appropriate Federal, State, local or foreign agencies responsible for investigating or prosecuting the violation of, or for enforcing or implementing a statute, rule, regulation, order, or license, when the disclosing agency becomes aware of information pertaining to a violation or potential violation of a statute, regulation, rule, order or license.

(7) To a Federal agency which has requested information relevant or necessary to the hiring or retention of an employee, or issuance of a security clearance, license, pilot qualification card, grant or other benefit.

(8) To Federal, State, local agencies or commercial businesses where necessary to obtain information relevant to the hiring or retention of an employee, or the issuance of a security clearance, license, pilot qualification card, grant or other benefit.

(9) To a congressional office in connection with an inquiry an individual covered by the system has made to the congressional office.

(10) To other Federal agencies conducting computer matching programs to help eliminate fraud and abuse and to detect unauthorized overpayments made to individuals.

POLICIES AND PRACTICES FOR STORING, RETRIEVING, ACCESSING, RETAINING, AND DISPOSING OR RECORDS IN THE SYSTEM:

STORAGE:

Records are stored in manual and automated form.

RETRIEVABILITY:

Records may be retrieved by employee name or Social Security number.

SAFEGUARDS:

Access to and use of these records is limited to those persons whose official duties require such access. Records are maintained in accordance with 43 CFR 2.51.

RETENTION AND DISPOSAL:

Records are retained in accordance with approved records retention and disposal schedules.

SYSTEM MANAGER(S) AND ADDRESS:

Director, Office of Aircraft Services, 2350 W. Robinson Road, Boise, Idaho 83705–5355.

NOTIFICATION PROCEDURE:

Inquiries regarding the existence of records shall be addressed to the System Manager. The request must be in writing, signed by the requestor, and comply with the content requirements of 43 CFR 2.60.

RECORD ACCESS PROCEDURES:

A request for access shall be addressed to the System Manager. The request must be in writing, signed by the requester, and comply with the content requirements of 43 CFR 2.63.

CONTESTING RECORD PROCEDURES:

A petition for amendment shall be addressed to the System Manager. The request must be in writing, signed by the requester, and comply with the content requirements of 43 CFR 2.71.

RECORD SOURCE CATEGORIES:

Employees, supervisors, timekeepers.

EXEMPTIONS CLAIMED FOR THE SYSTEM:

None.

[FR Doc. 99–8558 Filed 4–6–99; 8:45 am]

BILLING CODE 4310–RM–M

DEPARTMENT OF THE INTERIOR

Office of the Secretary

Privacy Act of 1974; as Amended; Revisions to the Existing System of Records

AGENCY: Office of the Secretary, Department of the Interior.

ACTION: Proposed revisions to an existing system of records.

SUMMARY: In accordance with the Privacy Act of 1974, as amended (5 U.S.C. 552a), the Office of the Secretary is issuing public notice of its intent to modify and existing Privacy Act system of records notice, DOI–60, ''Safety Management Information System.'' The revisions will update the address of the system location and the system manager.

EFFECTIVE DATE: These actions will be effective April 7, 1999.

FOR FURTHER INFORMATION CONTACT: Chief System Administrator, Safety Management Information system, Office of Managing Risk and Public Safety, U.S. Department of the Interior, 755 Parfet Street, Suite 354, Lakewood, Colorado 80215.

SUPPLEMENTARY INFORMATION: The Office of the Secretary is amending DOI–60, ''Safety Management Information System'' to update the address of the system location and system manager. Accordingly, the Department of the Interior proposes to amend the system notice for ''Safety Management

Information System,'' DOI–60 in its entirety to read as follows:

Sue Ellen Sloca,

Office of the Secretary, Privacy Act Officer, National Business Center.

INTERIOR/DOI–60

SYSTEM NAME:

Safety Management Information System—Interior, DOI–60.

SYSTEM LOCATION:

U.S. Department of the Interior, Office of Managing Risk and Public Safety, 755 Parfet Street, Suite 364, Lakewood, Colorado 80215.

CATEGORIES OF INDIVIDUALS COVERED BY THE SYSTEM:

Employees of the Department of the Interior, contractors, concessionaires, and public visitors to Interior facilities who have been involved in an accident resulting in personal injury and/or property damage.

CATEGORIES OF RECORDS IN THE SYSTEM:

For individuals covered by the system: Name of individual; Social Security number, birth date, sex, home address, occupation, and salary (for employees of the Department only); date and location of the accident; data elements about the accident for analytical purposes; and a descriptive narrative concerning what caused the accident.

AUTHORITY FOR MAINTENANCE OF THE SYSTEM:

(1) 5 U.S.C. 7901, (2) U.S.C. 2671–1680, (3) 31 U.S.C. 240–243, (4) 29 CFR Part 1960, (5) Executive Order 12196.

ROUTINE USES OF RECORDS MAINTAINED IN THE SYSTEM, INCLUDING CATEGORIES OF USERS AND THE PURPOSES OF SUCH USES:

The primary purposes of the system are:

(1) To provide summary data of injury, illness and property loss information to the bureaus in a number of formats for analytical purposes in order for them to improve accident prevention policies, procedures, regulations, standards, and operations.

(2) To provide listings of individual cases to bureaus to insure that accidents occurring are reported through the Safety Management Information System.

(3) To adjudicate tort and employee claims.

Disclosures outside the Department of the Interior may be made:

(1) To a Federal, State or local government agency that has partial or complete jurisdiction over the claim or related claims.

(2) To provide the Department of Labor with quarterly summary listings of fatalities and disabling injuries and illnesses in compliance with 28 CFR 1960.6.

(3) To the U.S. Department of Justice or in a proceeding before a court or adjudicative body when (a) the United States, the Department of the Interior, a component of the Department, or, when represented by the government, an employee of the Department is a party to litigation or anticipated litigation or has an interest in such litigation, and (b) the Department of the Interior determines that the disclosure is relevant or necessary to the litigation and is compatible with the purpose for which the records were compiled.

(4) To appropriate Federal, State, local or foreign agencies responsible for investigating or prosecuting the violation of, or for enforcing or implementing, a statue, rule, regulation, order or license, when the disclosing agency becomes aware of information indicating a violation or potential violation of a statute, regulation, rule, order or license.

(5) To a congressional office in connection with an inquiry an individual covered by the system has made to the congressional office.

POLICIES AND PRACTICES FOR STORING, RETRIEVING, ACCESSING, RETAINING, AND DISPOSING OF RECORDS IN THE SYSTEM:

STORAGE:

Official records are maintained and stored in electronic form on a host computer housed in the system location office. They are created and updated on the individual workstations of any/all employees and supervisors, Departmentwide, that can communicate, electronically, with the host computer.

RETRIEVABILITY:

Records are retrieved both by personal identifiers of covered individuals and by data elements associated with the accidents via automated lookup tables.

SAFEGUARDS:

(1) Access to the records is limited to Departmental employees who have an official need to use the records in the performance of their duties. Access to the records is controlled by (a) required user identification codes and passwords, and by (b) unique identifying personnel characteristics of users.

(2) Personal information is electronically tagged upon input into the system by employees or supervisors. It is not displayed or printed from the workstations of individuals not authorized to have access to it. It is protected from unauthorized access, during transmission, by electronic transmission encryption.

(3) Records are stored in a controlled area, secured from unauthorized access by an electronic firewall, and maintained with safeguards meeting the requirements of ''the Computer Security Guidelines for Implementing the Privacy Act of 1974'' (43 CFR 2.51).

RETENTION AND DISPOSAL:

Records are retained in accordance with National Archives and Records Administration's General Record Schedules #10 (Item 50), #18 (Item 11), and #20.

SYSTEM MANAGER(S) AND ADDRESS:

Chief System Administrator, Safety Management Information System, Office of Managing Risk and Public Safety, U.S. Department of the Interior, 755 Parfet Street, Suite 354, Lakewood, Colorado 80215.

NOTIFICATION PROCEDURE:

A request for notification of the existence of records shall be addressed to the System Manager. The request must be in writing, signed by the requester, and comply with the content requirements of 43 CFR 2.60.

RECORD ACCESS PROCEDURES:

A request for access to records shall be addressed to the System Manager. The request must be in writing signed by the requester, and comply with the content requirements of 43 CFR 2.63.

CONTESTING RECORD PROCEDURES:

A request for amendment of a record shall be addressed to the System Manager. The request must be in writing, signed by the requester, and comply with the content requirements of 43 CFR 2.71.

RECORD SOURCE CATEGORIES:

Employees involved in accidents, supervisors of employees involved in accidents, supervisors of operations where public visitors are involved in accidents, officials responsible for oversight of contractors and concessionaires, safety professionals and other management officials.

EXEMPTIONS CLAIMED FOR THE SYSTEM:

None.

[FR Doc. 99–8559 Filed 4–6–99; 8:45 am]

BILLING CODE 4310–RK–M

DEPARTMENT OF THE INTERIOR

Fish and Wildlife Service

Availability of an Environmental Assessment and Finding of No Significant Impact, and Receipt of an Application for an Incidental Take Permit for a Proposed Residential Development Called Palm Haven Subdivision, Unit 12, Highlands County, FL

AGENCY: Fish and Wildlife Service, Interior.

ACTION: Notice.

Mr. Norbert Walz (Applicant) requests an incidental take permit (ITP) pursuant to section 10(a)(1)(B) of the Endangered Species Act of 1973 (U.S.C. 1531 *et seq.*), as amended (Act). The Applicant anticipates taking up to two families of the threatened Florida scrub-jay (*Aphelocoma coerulescens coerulescens*), one eastern indigo snake (*Drymarchon corais couperi*), and eight acres of sand skink (*Neoseps reynoldsi*) and blue-tailed mole skink (*Eumeces egregius lividus*) habitat, (collectively known as the ''covered species'') incidental to the improvement of an existing road and clearing of 22 single-family residential lots. The proposed residential development will occur in section 2, Township 35 South, Range 28 East, Highlands County, near Sebring and is a component of Unit 12 of the Palm Haven Subdivision.

The widening and paving of an existing dirt road and the clearing of 22 residential lots will destroy suitable habitat for the four species identified above. A more detailed description of the mitigation and minimization measures to address the effects of the Project to the protected species are outlined in the Applicant's Habitat Conservation Plan (HCP), the Service's Environmental Assessment (EA), and in the **SUPPLEMENTARY INFORMATION** section below.

The Service also announces the availability of an EA and HCP for the incidental take application. Copies of the EA and/or HCP may be obtained by making a request to the Regional Office (see **ADDRESSES**). Requests must be in writing to be processed. This notice also advises the public that the Service has made a preliminary determination that issuing the ITP is not a major Federal action significantly affecting the quality of the human environment within the meaning of Section 102(2)(C) of the National Environmental Policy Act of 1969, as amended (NEPA). The Finding of No Significant Impact (FONSI) is based on information contained in the EA and HCP. The final determination will be made no sooner than 30 days from the date of this notice. This notice is provided pursuant to Section 10 of the Act and NEPA regulations (40 CFR 1506.6).

The Service specifically requests information, views, and opinions from the public via this Notice on the federal action, including the identification of any other aspects of the human environment not already identified in the Service's EA. Further, the Service is specifically soliciting information regarding the adequacy of the HCP as measured against the Service's ITP issuance criteria found in 50 CFR Parts 13 and 17.

DATES: Written comments on the ITP application, EA, and HCP should be sent to the Service's Regional Office (see **ADDRESSES**) and should be received on or before May 7, 1999.

ADDRESSES: Persons wishing to review the application, HCP, and EA may obtain a copy by writing the Service's Southeast Regional Office, Atlanta, Georgia. Documents will also be available for public inspection by appointment during normal business hours at the Regional Office, 1875 Century Boulevard, Suite 200, Atlanta, Georgia 30345 (Attn: Endangered Species Permits), or Field Supervisor, U.S. Fish and Wildlife Service, Post Office Box 2676, Vero Beach, Florida 32961–2676. Written data or comments concerning the application, EA, or HCP should be submitted to the Regional Office. Requests for the documentation must be in writing to be processed. Comments must be submitted in writing to be adequately considered in the Service's decision-making process. Please reference permit number TE009033–0 in such comments, or in requests of the documents discussed herein.

FOR FURTHER INFORMATION CONTACT: Mr. Rick G. Gooch, Regional HCP Coordinator, (see **ADDRESSES** above), telephone: 404/679–7110, facsimile: 404/679–7081; or Mr. Mike Jennings, Fish and Wildlife Biologist, South Florida Ecosystem Office, Vero Beach, Florida (see **ADDRESSES** above), telephone: 561/562–3909.

SUPPLEMENTARY INFORMATION: The Florida scrub-jay (scrub-jay) occurs in xeric uplands (predominately oak scrub) of peninsular Florida. Sand skinks and blue-tailed mole skinks are restricted to xeric uplands in central Florida. The eastern indigo snake ranges throughout the southeastern United States, but is most commonly associated with xeric habitats. Increasing urban and agricultural development have resulted in habitat loss and fragmentation which has adversely affected the distribution and numbers of individuals of each of these species.

The scrub-jay is geographically isolated from other subspecies of scrub-jays found in Mexico and the Western United States. The scrub-jay is found exclusively in peninsular Florida and is restricted to scrub habitat. The total estimated population is between 7,000 and 11,000 individuals. Due to habitat loss and degradation throughout the State of Florida, it has been estimated that the scrub-jay has been reduced by at least half in the last 100 years.

The number and distribution of scrub-jays in southcentral Florida has been greatly reduced. Based on existing soils data, much of the historic and current scrub-jay habitat of interior Florida occurs along a 100-mile stretch of ancient dunes that are situated on a north-south axis from Osceola to Highlands counties. Much of this area of Florida was settled early because few wetlands restricted urban and agricultural development. Due to the effects of urban and agricultural development over the past 100 years, much of the remaining scrub-jay habitat is now relatively small and isolated. What remains is largely degraded due to lack of adequate land management.

Scrub-jays using the Project site and adjacent lands are considered part of a larger complex of scrub-jays that occupy xeric uplands of southcentral Florida. This complex of scrub-jay families is considered one of five remaining areas where relatively large numbers of birds remain demographically linked. The continued survival of scrub-jay in this subregion may be dependent on the maintenance of suitable habitat and the restoration of unsuitable habitat in Highlands County.

Scrub-jay use of the Project site and adjacent lands has been assessed on one occasion. In 1998, field investigations determined that two scrub-jay families used portions of the Project site as well as adjacent lands. Though no systematic surveys were conducted to delineate territorial boundaries, suitability of habitat within the Project site indicate that about three acres of suitable habitat exist. The close proximity of areas known to be used by scrub-jays and the fact that this species is territorial, suggests the suitable habitat within the Project site is used by one or both of the scrub-jay families known from the vicinity. Nesting, foraging, and security habitat exists within the Project site.

The Project site is part of a partially built-out, platted, subdivision that is bisected by many unimproved dirt roads. The Project site is bounded on

three sides by urban development and the site itself is negatively influenced by adjacent residents (e.g., trash dumping, off-road vehicle use, etc.). Due to the proximity of the Project site to existing residential development, fire has been actively excluded because of human safety concerns. As a result, the condition of the xeric habitat within and adjacent to the Project site is degraded; periodic fire is required to maintain habitat conditions suitable for the scrub-jay.

Many of the factors discussed above for the scrub-jay are also affecting the eastern indigo snake, sand skink, and blue-tailed mole skink within the Project site and vicinity. The eastern indigo snake is a wide-ranging species that is found in most upland communities, however, it is typically found in more xeric areas. This species has a relatively large territory size (100 to 200 acres) that may cover several vegetative community types. Indigo snakes are difficult to survey, so positive identification of occupied habitat is often problematic. Habitat loss and fragmentation are currently thought to be the primary threat to this species.

The sand skink and blue-tailed mole skink inhabit xeric uplands of central Florida. The sand skink is semi-fossorial while the blue-tailed mole skink is exclusively fossorial. These species spend much of their time buried in or on top of the dry, loose sandy soils of xeric uplands. As mentioned above, agricultural development over the past 100 years has resulted in the loss or degradation of up to 50 percent of the xeric uplands of central Florida. Accordingly, these species have declined in numbers and distribution.

Construction of the Project's infrastructure and subsequent construction of the individual homesites will likely result in death of, or injury to, scrub-jays, indigo snakes, sand skinks, and blue-tailed mole skinks, incidental to the carrying out of these otherwise lawful activities. Habitat alteration associated with the proposed residential development will reduce the availability of feeding, nesting, and sheltering habitat for these species.

The Applicant's HCP and the Service's EA describes the following minimization and mitigation strategy to be employed by the Applicant to offset the impacts of the Project to the scrub-jay:

- During lot preparation, the Applicant agrees to minimize loss of xeric vegetation, by restricting vegetation clearing to that necessary for construction.
- The Applicant shall use native xeric plants for ornamental purposes, and encourage such use by future homeowners.
- Compensate for the destruction of 3.04 acres of suitable scrub-jay habitat by acquiring and providing a management endowment for 6.08 acres of xeric upland habitat at a location specified by the Service, or
- Provide $13,406 in funding to be used for the acquisition and management of xeric uplands, public education, and/or research, as specified by the Service.

The EA considers the environmental consequences of two action alternatives, both of which would require issuance of an ITP. The preferred alternative would affect about eight acres of xeric uplands and a larger scale residential development plan would affect about 30 acres of xeric uplands. The no action alternative (not issue the ITP) may result in loss of habitat for federally listed species described above and exposure of the Applicant under Section 9 of the Act. The proposed action alternative is issuance of the ITP according to the HCP as submitted and described above. Under the proposed alternative, the effect of the minimization and mitigation strategy will be that the affected scrub-jay habitat within the Project site will be mitigated through a financial contribution or through fee simple acquisition of off-project suitable habitat areas. Funding for habitat acquisition or fee simple acquisition of habitat by the Applicant is expected to adequately compensate for the effect of the anticipated incidental take of eastern indigo snakes, sand skinks, and blue-tailed mole skinks, as described in the Service's EA. On-site minimization measures will provide short-term protection of some habitat for the covered species; however, the influences of urbanization will eventually erode the value of any xeric vegetation retained within the Project site.

As stated above, the Service has made a preliminary determination that the issuance of the ITP is not a major Federal action significantly effecting the quality of the human environment within the meaning of Section 102(2)(C) of NEPA. This preliminary information may be revised due to public comment received in response to this notice and is based on information contained in the EA and HCP. Similarly, the Service will evaluate the HCP and comments submitted thereon to determine whether the application meets the requirements of section 10(a) of the Act. If it is determined that those requirements are met, an ITP will be issued for incidental take of the covered species. The Service will also evaluate whether the issuance of a Section 10(a)(1)(B) ITP complies with Section 7 of the Act by conducting an intra-Service Section 7 consultation. The results of the consultation, in combination with the above findings, will be used in the final analysis to determine whether or not to issue the ITP; the final decision will be made no sooner than 30 days from the date of this notice.

Dated: April 1, 1999.

H. Dale Hall,

Deputy Regional Director.

[FR Doc. 99–8563 Filed 4–6–99; 8:45 am]

BILLING CODE 4310–55–P

DEPARTMENT OF THE INTERIOR

Bureau of Land Management

[WO–320–1330–01–24 1A]

Notice of Proposed Information Collection, OMB Approval No. 1004–0103

AGENCY: Bureau of Land Management, Interior.

ACTION: Notice and request for comments.

SUMMARY: In accordance with the Paperwork Reduction Act of 1995, the Bureau of Land Management (BLM) announces its intention to request renewal of the existing approval to collect information from applicants who apply to purchase mineral materials from public lands under the mineral materials regulations. Respondents supply the information so that BLM can evaluate the environmental impacts of their proposals and determine their qualifications to receive a mineral materials contract.

DATES: BLM must receive comments on the proposed information collection by June 7, 1999, to assure its consideration of them.

ADDRESSES: Mail comments to: Director (630), Bureau of Land Management, 1849 C St., N.W., Mail Stop 401 LS, Washington, D.C. 20240. Send comments by means of the internet to: *WoComment@wo.blm.gov.* Please include ''ATTN: 1004–0103'' and your name and return address in your internet message.

You may hand deliver comments to the BLM Administrative Record, Room 401 L Street, N.W., Washington, D.C. BLM will make comments available for public review and comment at the L Street address during regular business hours (7:45 am to 4:15 pm), Monday through Friday.

FOR FURTHER INFORMATION CONTACT: Durga N. Rimal, Solid Minerals Group, (202) 452–0350.

SUPPLEMENTARY INFORMATION: The regulations at 5 CFR 1320.8(d) require BLM to provide a 60-day notice in the **Federal Register** concerning the collection of information contained in Forms 3600–4 and 3600–5, to seek comments on: (1) Whether the proposed collection of information is necessary for the proper performance of the functions of the agency, including whether the information will have practical utility; (2) the accuracy of the agency's estimate of the burden of the proposed collection of information, including the validity of the methodology and assumptions used; (3) ways to enhance the quality, utility, and clarity of the information to be collected; and (4) ways to minimize the burden of the collection of information on those who are to respond, including through the use of appropriate automated, electronic, mechanical, or other technological collection techniques or other forms of information technology. BLM will review and analyze any comments sent in response to this notice and include them with its request for approval from the OMB under the Paperwork Reduction Act.

The Mineral Materials Act of 1947, as amended (Act), 30 U.S.C. 601 and 602, provides for the disposal of mineral materials, such as sand, gravel, and petrified wood, from the public lands by sale or free use. The Secretary disposes of such materials at his discretion, consistent with the regulations at 43 CFR Part 3600.

BLM uses the information that an applicant or permittee submits to: (1) determine if the sale of mineral materials is in the public interest, (2) mitigate the environmental impacts of mineral materials development, (3) get fair market value for the materials sold, and (4) prevent trespass removal of the materials.

Applicants must submit a written request to BLM to purchase mineral materials. Specific information requirements are not stated in the regulations, but all sales agreements are made on contract forms approved by the BLM Director. BLM uses two forms. Form 3600–4 is used when the sale value is less than $2,000, and the applicant fully pays the amount due when executing the contract. Form 3600–5 is used for sales of $2,000 or more and provides for installment payments. Both forms require the following information: (1) The applicant's name and address, (2) an authorized signature, and (3) the location and amount of the material to be purchased. BLM uses the information to enter into the binding contract and to identify and communicate with the applicant. Without binding contractual agreements, the federal government would not be able to require appropriate reclamation of disturbed sites, protect natural resources, or ensure regular payments for the public mineral materials sold.

Based on BLM's experience in administering the activities described, the public reporting burden for the information described is estimated to average 30 minutes per response. The respondents operators desiring sand, gravel, stone, and other mineral materials from lands under BLM jurisdiction. The frequency of response is once or twice per year.

The majority of respondents consist of permittees with sales contracts amounting to less than $2,000. Depending upon the site and the amount of materials, BLM, before processing the applications, may require applicants to provide an outline of a mining or reclamation plan at the time of applications. A majority of sales occur from community pits for which BLM has already developed a mining and reclamation plan, and there is no additional burden to applicants. The estimated average preparation time for completing Forms 3600–4 and 3600–5 and preparing any supporting documents is 30 minutes. Actual time varies from 15 minutes (most common) to several days for larger projects. The number of requests for sales averages 2,600 per year, with a total annual burden of 1,125 hours.

For sales contracts with terms exceeding 1 year, respondent must submit annual production reports for the duration of the contract. The average reporting burden for such respondents is about 30 minutes. The estimated number of production reports is 600 per year, with an estimated annual burden of 300 hours.

Applicants for sales contracts may test and sample deposits, with letters of use authorization from BLM. In an average year BLM issues about 100 letters of use authorization. The collective annual burden for this activity is estimated to be 75 hours. The total annual burden for all respondents is 1,500 hours.

BLM will summarize all responses to this notice and include them in the request for Office of Management and Budget approval. All comments will become part of the public record.

Dated: March 30, 1999.

Carole Smith,

BLM Information Clearance Officer.

[FR Doc. 99–8601 Filed 4–6–99; 8:45 am]

BILLING CODE 4310–84–M

DEPARTMENT OF THE INTERIOR

Bureau of Land Management

[NV 910 0777 30]

Northeastern Great Basin Resource Advisory Council Meeting Location and Time

AGENCY: Bureau of Land Management, Interior.

ACTION: Resource Advisory Councils' Meeting Location and Time.

SUMMARY: In accordance with the Federal Land Policy and Management Act and the Federal Advisory Committee Act of 1972 (FACA), 5 U.S.C., the Department of the Interior, Bureau of Land Management (BLM), Council meetings will be held as indicated below. The agenda for the May 14, 1999 meeting includes: approval of minutes of the previous meeting, Standards and Guidelines for wild horses, pinyon-juniper, mining and recreation; a status report on the Fish Creek Interim Evaluation by Eureka County; Resource Advisory Council (RAC) member reports on constituent contacts regarding possible Wilderness legislation; 3809 draft mining regulations; report on a wild horse gentling initiative; renewal of the RAC Charter; and field manager reports on current BLM activities and planned actions for the Battle Mountain, Elko and Ely Field Offices. The Council will also determine subject matter for future meetings.

On May 15, 1999, the Council will take a field tour of the Fish Creek Wild Horse Herd Management Area.

All meetings are open to the public. Citizens may present written comments to the Council. Each formal Council meeting will also have time allocated for hearing public comments. The public comment period for the Council meeting is listed below. Depending on the number of persons wishing to comment and time available, the time for individual oral comments may be limited. The public may attend the field tour. Individuals who plan to attend or need special assistance, such as sign language interpretation or other reasonable accommodations, should contact Curtis Tucker, Special Projects Coordinator, Ely District Office, 702 North Industrial Way, HC 33 Box 33500,

Ely, NV 89301–9408, telephone 775–289–1841.

DATES, TIMES: The time and location of the meeting is as follows: Northeastern Great Basin Resource Advisory Council meeting, May 14, 1999, starting at 9:00 a.m.; Eureka Opera House, Eureka, Nevada 89316; public comments will be at 11:30 a.m.; tentative adjournment 5:00 p.m. May 15, 1999, starting at 8:00 a.m., the field tour will depart from the Eureka Opera House in Eureka and return at approximately 4 p.m. Tentative adjournment will be at 4:30 p.m.

FOR FURTHER INFORMATION CONTACT: Curtis Tucker, Special Projects Coordinator, Ely District Office, 702 North Industrial Way, HC 33 Box 33500, Ely, NV 89301–9408, telephone 702–289–1841.

SUPPLEMENTARY INFORMATION: The purpose of the Council is to advise the Secretary of the Interior, through the BLM, on a variety of planning and management issues, associated with the management of the public lands.

Those planning to attend the tour should wear clothing suitable for hiking, including sturdy footwear, and provide their own food and water. Those wishing to use government transportation should contact Mr. Tucker prior to the meeting.

Dated: March 26, 1999.

Helen Hankins,

District Manager, Elko.

[FR Doc. 99–8600 Filed 4–6–99; 8:45 am]

BILLING CODE 4310–HC–M

DEPARTMENT OF THE INTERIOR

Bureau of Land Management

[NM–030–1430–01; NMNM100779]

Notice of Realty Action; Recreation and Public Purposes (R&PP) Act Classification; New Mexico

AGENCY: Bureau of Land Management (BLM), Interior.

ACTION: Notice of Realty Action; R&PP Act Classification.

SUMMARY: The following public land in Dona Ana County, New Mexico has been examined and found suitable for classification for lease or conveyance to Dona Ana County, New Mexico under the provision of the R&PP Act, as amended (43 U.S.C. 869 *et seq.*). Dona Ana County proposes to use the land for a Public Health Facility.

T. 22 S., R. 3 W, NMPM,
Sec. 18: Part of lot 12.
Containing 2.5 acres, more or less.

DATES: Comments regarding the proposed lease/conveyance or classification must be submitted on or before May 24, 1999.

ADDRESSES: Comments should be sent to the Bureau of Land Management, Las Cruces Field Office, 1800 Marquess, Las Cruces, New Mexico 88005.

FOR FURTHER INFORMATION CONTACT: Marvin M. James at the address above or at (505) 525–4349.

SUPPLEMENTARY INFORMATION: Lease or conveyance will be subject to the following terms, conditions, and reservations:

1. Provisions of the R&PP Act and to all applicable regulations of the Secretary of the Interior.

2. All valid existing rights documented on the official public land records at the time of lease/patent issuance.

3. All minerals shall be reserved to the United States, together with the right to prospect for, mine, and remove the minerals.

4. Any other reservations that the authorized officer determines appropriate to ensure public access and proper management of Federal lands and interests therein.

Upon publication of this notice in the **Federal Register**, the land will be segregated from all other forms of appropriation under the public land laws, including the general mining laws, except for lease or conveyance under the R&PP Act and leasing under the mineral leasing laws. On or before May 24, 1999, interested persons may submit comments regarding the proposed lease/conveyance or classification of the land to the Field Manager, Las Cruces Field Office, 1800 Marquess, Las Cruces, New Mexico 88005. Any adverse comments will be reviewed by the State Director. In the absence of any adverse comments, the classification will become effective 60 days from the date of publication of this notice.

Classification Comments: Interested parties may submit comments involving the suitability of the land for a Public Health Facility. Comments on the classification are restricted to whether the land is physically suited for the proposal, whether the use will maximize the future use or uses of the land, whether the use is consistent with local planning and zoning, or if the use is consistent with State and Federal programs.

Application Comments: Interested parties may submit comments regarding the specific use proposed in the application and plan of development, whether the BLM followed proper administrative procedures in reaching the decision, or any other factor not directly related to the suitability of the land for a Public Health Facility.

Dated: April 1, 1999.

Bill Merhege,

Acting Field Manager, Las Cruces.

[FR Doc. 99–8564 Filed 4–6–99; 8:45 am]

BILLING CODE 4310–VC–P

DEPARTMENT OF THE INTERIOR

Bureau of Land Management

[NM–030–1430–00; NMNM 96531 & NMNM 98501]

Notice of Realty Action; Recreation and Public Purposes (R&PP) Act Classification; New Mexico

AGENCY: Bureau of Land Management (BLM), Interior.

ACTION: Correction notice.

SUMMARY: In **Federal Register** Volume 64, Page 13231, Number 51 of Wednesday, March 17, 1999, Notices, under the **SUMMARY** heading, change the legal description of ''Parcel 1'' to read:

Parcel 1

T. 29 S., R. 4 E., NMPM
Sec. 17, Lots 6, 8, and 9, W½2E½NE¼, SW¼4NE¼.
Containing 138.88 acres, more or less.

Dated: April 1, 1999.

Bill Merhege,

Acting Field Manager, Las Cruces.

[FR Doc. 99–8565 Filed 4–6–99; 8:45 am]

BILLING CODE 4310–VC–P

DEPARTMENT OF THE INTERIOR

Jimmy Carter National Historic Site Advisory Commission; Notice of Meeting

AGENCY: National Park Service, DOI, Jimmy Carter National Historic Site.

ACTION: Notice of advisory commission meeting.

SUMMARY: Notice is hereby given in accordance with the Federal Advisory Commission Act that a meeting of the Jimmy Carter National Historic Site Advisory Commission will be held at 8:30 a.m. to 4:00 p.m., at the following location and date.

DATES: April 15, 1999.

LOCATION: The Carter Library, One Copenhill, Atlanta, Georgia 30309.

FOR FURTHER INFORMATION CONTACT: Mr. Fred Boyles, Superintendent, Jimmy Carter National Historic Site, Route 1 Box 800, Andersonville, Georgia 31711, (912) 924–0343 Extension 105.

SUPPLEMENTARY INFORMATION: The purpose of the Jimmy Carter National

Historic Site Advisory Commission is to advise the Secretary of the Interior or his designee on achieving balanced and accurate interpretation of the Jimmy Carter National Historic Site.

The members of the Advisory Commission are as follows:

Dr. Henry King Stanford
Dr. James Sterling Young
Dr. Barbara J. Fields
Dr. Donald B. Schewe
Dr. Steven H. Hochman
Director, National Park Service, Ex-Officio member

The matters to be discussed at this meeting include the status of park development and planning activities. This meeting will be open to the public. However, facilities and space for accommodating members of the public are limited. Any member of the public may file with the commission a written statement concerning the matters to be discussed. Written statements may also be submitted to the Superintendent at the address above. Minutes of the meeting will be available at Park Headquarters for public inspection approximately 4 weeks after the meeting.

Dated: March 26, 1999.

Daniel W. Brown,

Regional Director Southeast Region.

[FR Doc. 99–8514 Filed 4–6–99; 8:45 am]

BILLING CODE 4310–70–M

DEPARTMENT OF THE INTERIOR

Office of Surface Mining Reclamation and Enforcement

Privacy Act of 1974, as Amended; Systems of Records

AGENCY: Office of Surface Mining, Interior.

ACTION: Notice of deletion of two systems of records.

SUMMARY: Pursuant to the provisions of the Privacy Act of 1974, as amended (5 U.S.C. 552a), notice is hereby given that the Department of the Interior is deleting two systems of records managed by the Office of Surface Mining (OSM). One system of records, entitled ''Property Control—Interior/OSMRE–4'' has been re-examined and determined that the records contained in this system of records are covered by and maintained in ''Personal Property Accountability Records—Interior/MMS–2,'' published in the **Federal Register** on February 18, 1999 (64 FR 8111). The other system of records, entitled ''Safety Files—Interior/OSM–6'' has been re-examined and determined that the records contained in this system of records are covered by and maintained in ''Safety Management Information System—Interior/DOI–60,'' published in the **Federal Register** on January 6, 1997 (62 FR 767) and ''Employee Medical File System—OPM/GOVT–10,'' published in the **Federal Register** on July 15, 1996 (61 FR 36919).

DATES: These actions will be effective April 7, 1999.

FOR FURTHER INFORMATION CONTACT: Barbara Russell, Chief, Office of Administration, Assistant Directorate, Finance and Administration, Office of Surface Mining, at (202) 208–2593.

SUPPLEMENTARY INFORMATION: Earlier Privacy Act Compilations list the systems of records with the prefix of ''OSMRE'' (e.g., OSMRE–4) when originally published in the **Federal Register**. The prefix was later changed to ''OSM'' in subsequent records systems for convenience; the content of the systems of records is the same.

The two systems of records being deleted and the reasons for deletion are listed below:

1. Interior/OSMRE–4, ''Property Control,'' previously published in the **Federal Register** on December 27, 1988 (53 FR 52241). The records contained in this system of records are covered by and maintained in Interior/MMS–2, ''Personal Property Accountability Records,'' published in the **Federal Register** on February 18, 1999 (64 FR 8111). Records can be located by contacting the System Manager(s) listed in MMS–2: Chief, Support Services Branch, Procurement and Support Services Division, Minerals Management Services Division, Minerals Management Service, Mail Stop 2520, 381 Elden Street, Herndon, Virginia 20170–4817 or Chief, Office of Administration, Office of Surface Mining, 1951 Constitution Avenue, NW, Washington, DC 20240.

2. Interior/OSM–6, ''Safety Files,'' previously published in the **Federal Register** on March 31, 1978 (43 FR 13644). The records contained in this system of records are covered by and maintained in Interior/DOI–60, ''Safety Management Information System,'' published in the **Federal Register** on January 6, 1997 (62 FR 767); and in OPM/GOVT–10, ''Employee Medical File System,'' published in the **Federal Register** on July 15, 1996 (61 FR 36919). Records can be located by contacting the System Managers and following the procedures listed in those notices.

Robert Ewing,

Chief Information Officer, Office of Surface Mining.

[FR Doc. 99–8560 Filed 4–6–99; 8:45 am]

BILLING CODE 4310–05–M

DEPARTMENT OF THE INTERIOR

Office of Surface Mining

Privacy Act of 1974, as Amended; Systems of Records

AGENCY: Office of Surface Mining, Interior.

ACTION: Notice of deletion.

SUMMARY: Pursuant to the provisions of the Privacy Act of 1974, as amended (5 U.S.C. 552a), notice is hereby given that the Department of the Interior is deleting one system of records managed by the Office of Surface Mining. The system of records entitled ''Personnel Security Files—Interior/OSMRE–7,'' is deleted because the system is covered by and maintained in two other systems of records notices.

DATE: Action will be effective April 7, 1999.

FOR FURTHER INFORMATION CONTACT: Peggy Moran-Gicker, Office of Personnel, Office of Surface Mining, at (202) 208–2762.

SUPPLEMENTARY INFORMATION: Earlier Privacy Act Compilations list the systems of records with the prefix of ''OSMRE'' (e.g, OSMRE–7) when originally published in the **Federal Register**. The prefix was later changed to ''OSM'' in subsequent records systems for convenience; the content of the systems of records was the same. ''Personnel Security Files—Interior/OSMRE–7'' was previously published in the **Federal Register** on June 6, 1989 (54 FR 24270). The Office of Surface Mining has recently completed a Privacy Act review of OSMRE–7. It was determined that this system of records is covered by and maintained in Interior/OS–45, ''Security Clearance Files and Other Reference Files'' and OPM/Central–9, ''Personnel Investigations Records.'' Therefore, we are deleting OSMRE–7 from the Privacy Act systems of records for the Department of the Interior. Records can be located by contacting the System Manager(s) and following the procedures listed in those notices.

Robert Ewing,

Chief Information Officer, Office of Surface Mining.

[FR Doc. 99–8561 Filed 4–6–99; 8:45 am]

BILLING CODE 4310–05–M

ACTION: Notice of deletion of two systems of records.

SUMMARY: Pursuant to the provisions of the Privacy Act of 1974, as amended (5 U.S.C. 552a), notice is hereby given that the Department of the Interior is deleting two systems of records managed by the Office of Surface Mining (OSM). The system of records entitled ''Net Worth Determination File—Interior/OSMRE–10'' and the system of records entitled ''Collection Management Information System (CMIS)—Interior/OSMRE-11'' both have been re-examined and determined not to be subject to the Privacy Act.

DATES: These actions will be effective April 7, 1999.

FOR FURTHER INFORMATION CONTACT: Mark H. White, Team Leader, Fee Accounting and Collections Team, Office of Surface Mining, at (303) 236–0330 X242.

SUPPLEMENTARY INFORMATION: Earlier Privacy Act Compilations list the system of records with the prefix of ''OSMRE'' (e.g., OSMRE–10 and OSMRE–11) when originally published in the **Federal Register**. The prefix was later changed to ''OSM'' in subsequent records systems for convenience; the content of the systems of records was the same. The two system of records notices being deleted and the reasons for deletion are listed below.

1. Interior, OSM–10, ''Net Worth Determination File,'' previously published in the **Federal Register** on February 14, 1991 (56 FR 6032). A Privacy Act review of OSM–10 has recently been completed by OSM. An opinion issued on August 30, 1988 by the General Counsel, Office of Management and Budget (OMB) affirmed OMB's 1975 guidelines, which interpreted the statutory term ''individual'' to exclude natural persons acting in an entrepreneurial capacity from coverage of the Privacy Act. A review of the Net Worth Determination File indicated that the records solely contain information about persons acting in an entrepreneurial capacity. Therefore, the system is not subject to the Privacy Act and the notice is being deleted from the Department's compilation of Privacy Act systems of records notices.

2. Interior, OSM–11, ''Collection Management Information System (CMIS),'' previously published in the **Federal Register** on July 11, 1989 (54 FR 29108). A Privacy Act review of OSM–11 has also been completed by OSM. An opinion issued on August 30, 1988 by the General Counsel, Office of Management and budget (OMB) affirmed OMB's 1975 guidelines, which interpreted the statutory term ''individual'' to exclude natural persons acting in an entrepreneurial capacity from coverage of the Privacy Act. A review of CMIS indicated that the records solely contain information about persons acting in an entrepreneurial capacity. Therefore, the system is not subject to the Privacy Act and the notice is being deleted from the Department's compilation of Privacy Act systems of records notices.

Robert Ewing,

Chief Information Officer, Office of Surface Mining.

[FR Doc. 99–8562 Filed 4–6–99; 8:45 am]

BILLING CODE 4310–05–M

INTERNATIONAL TRADE COMMISSION

Investigation No. 731–TA–130 (Review)

Chloropicrin from China

Determination

On the basis of the record [1] developed in the subject five-year review, the United States International Trade Commission determines, pursuant to section 751(c) of the Tariff Act of 1930 (19 U.S.C. 1675(c)) (the Act), that revocation of the antidumping duty order on chloropicrin from China would be likely to lead to continuation or recurrence of material injury to an industry in the United States within a reasonably foreseeable time.

Background

The Commission instituted this review on November 2, 1998 (63 F.R. 58761), and determined on February 4, 1999, that it would conduct an expedited review (64 F.R. 9173, Feb. 24, 1999).

The Commission is scheduled to transmit its determination in this investigation to the Secretary of Commerce on April 1, 1999. The views of the Commission will be contained in USITC Publication 3175 (April 1999), entitled Chloropicrin from China: Investigation No. 731–TA–130 (Review).

Issued: March 26, 1999.

By order of the Commission.

Donna R. Koehnke,

Secretary.

[FR Doc. 99–8603 Filed 4–6–99; 8:45 am]

BILLING CODE 7020–02–P

[1] The record is defined in sec. 207.2(f) of the Commission's Rules of Practice and Procedure (19 CFR § 207.2(f)).

INTERNATIONAL TRADE COMMISSION

[Investigation No. 731-TA–814 (Preliminary)]

Creatine Monohydrate From the People's Republic of China

Determination

On the basis of the record [1] developed in the subject investigation, the United States International Trade Commission determines, pursuant to section 733(a) of the Tariff Act of 1930 (19 U.S.C. § 1673b(a)), that there is a reasonable indication that an industry in the United States is materially injured by reason of imports from the People's Republic of China of creatine monohydrate, provided for in subheading 2925.20.90 of the Harmonized Tariff Schedule of the United States, that are alleged to be sold in the United States at less than fair value (LTFV).

Commencement of Final Phase of Investigation

Pursuant to section 207.18 of the Commission's rules, the Commission also gives notice of the commencement of the final phase of its investigation. The Commission will issue a final phase notice of scheduling which will be published in the **Federal Register** as provided in section 207.21 of the Commission's rules upon notice from the Department of Commerce (Commerce) of an affirmative preliminary determination in the investigation under section 733(b) of the Act, or, if the preliminary determination is negative, upon notice of an affirmative final determination in that investigation under section 735(a) of the Act. Parties that filed entries of appearance in the preliminary phase of the investigation need not enter a separate appearance for the final phase of the investigation. Industrial users, and, if the merchandise under investigation is sold at the retail level, representative consumer organizations have the right to appear as parties in Commission antidumping and countervailing duty investigations. The Secretary will prepare a public service list containing the names and addresses of all persons, or their representatives, who are parties to the investigation.

Background

On February 12, 1999, a petition was filed with the Commission and the Department of Commerce by Pfanstiehl Laboratories, Inc., Waukegan, IL,

[1] The record is defined in sec. 207.2(f) of the Commission's Rules of Practice and Procedure (19 CFR § 207.2(f)).

alleging that an industry in the United States is materially injured and is threatened with material injury by reason of LTFV imports of creatine monohydrate from the People's Republic of China. Accordingly, effective February 12, 1999, the Commission instituted antidumping investigation No. 731–TA–814 (Preliminary).

Notice of the institution of the Commission's investigation and of a public conference to be held in connection therewith was given by posting copies of the notice in the Office of the Secretary, U.S. International Trade Commission, Washington, DC, and by publishing the notice in the **Federal Register** of February 22, 1999 (64 FR 8629). The conference was held in Washington, DC, on March 8, 1999, and all persons who requested the opportunity were permitted to appear in person or by counsel.

The Commission transmitted its determination in this investigation to the Secretary of Commerce on April 5, 1999. The views of the Commission will be contained in USITC Publication 3177 (April 1999), entitled *Creatine Monohydrate from the People's Republic of China: Investigation No. 731–TA–814 (Preliminary).*

Issued: March 30, 1999.

By order of the Commission.

Donna R. Koehnke,

Secretary.

[FR Doc. 99–8604 Filed 4–6–99; 8:45 am]

BILLING CODE 7020–02–P

INTERNATIONAL TRADE COMMISSION

[Investigation No. 701–TA–375 (Final)]

Extruded Rubber Thread From Indonesia

AGENCY: United States International Trade Commission.

ACTION: Termination of investigation.

SUMMARY: On March 26, 1999, the Department of Commerce published notice in the **Federal Register** of a negative final determination of subsidies in connection with the subject investigation (64 FR 14695). Accordingly, pursuant to section 207.40(a) of the Commission's Rules of Practice and Procedure (19 CFR § 207.40(a)), the countervailing duty investigation concerning extruded rubber thread from Indonesia (investigation No. 701–TA–375 (Final)) is terminated.

EFFECTIVE DATE: March 26, 1999.

FOR FURTHER INFORMATION CONTACT: Jonathan Seiger (202–205–3183), Office of Investigations, U.S. International Trade Commission 500 E Street S.W., Washington, DC 20436. Hearing-impaired individuals are advised that information on this matter can be obtained by contacting the Commission's TDD terminal on 202–205–1810. Persons with mobility impairments who will need special assistance in gaining access to the Commission should contact the Office of the Secretary at 202–205–2000. General information concerning the Commission may also be obtained by accessing its internet server (http:www.usitc.gov).

Authority: This investigation is being terminated under authority of title VII of the Tariff Act of 1930; this notice is published pursuant to section 201.10 of the Commission's rules (19 CFR 201.10).

By order of the Commission.

Issued: March 30, 1999.

Donna R. Koehnke,

Secretary.

[FR Doc. 99–8605 Filed 4–6–99; 8:45 am]

BILLING CODE 7020–02–M

DEPARTMENT OF JUSTICE

Antitrust Division

International Competition Policy Advisory Committee (ICPAC); Notice of Hearings

The International Competition Policy Advisory Committee (''Advisory Committee'') will hold hearings on April 22–23, 1999. The Advisory Committee was established by the Department of Justice to provide advice regarding issues relating to international competition policy; specifically, how best to cooperate with foreign authorities to eliminate international anticompetitive agreements, how best to coordinate United States' and foreign antitrust enforcement efforts in the review of multinational mergers, and how best to address issues that interface international trade and competition policy concerns. The hearings will be held at the Center for Strategic and International Studies, B–1 Conference Center, 1800 K Street, NW, Washington, DC. The agenda and current schedule for the hearings are as follows:

Day 1—April 22, 1999

9:00–9:30 Welcoming Remarks

9:30–12:00 Session One: Presentations on Confidential Information Sharing

12:00–1:00 Session Two: Presentation by Representatives of Trade Associations (Part I)

2:00–2:45 Session Two: Presentations by Representatives of Trade Associations (Part II)

2:45–4:00 Session Three: Presentations by Members of the ABA Antitrust Section Task Force

4:15–5:45 Session Four: Presentations by Members of the ABA International Section

Day 2—April 23, 1999

9:00–9:15 Welcoming Remarks

9:15–11:15 Session One: Presentations by Members of the ABA Antitrust Section Task Force

11:30–12:30 Session Two: Presentations on the Role of International Institutions in Competition Policy

1:30–3:00 Session Three: Presentations from Representatives of U.S. Businesses

3:15–4:15 Session Four: Presentations on Institution Building and Competition Law Advocacy

4:15–5:30 Session Five: Presentations by Economists

The hearings schedule is not final and may change. For the latest information about the hearings schedule or other matters related to the hearings, please check the Advisory Committee's website at: www.usdoj.gov/atr/icpac/icpac.htm or contact Marianne Pak of the Advisory Committee staff at (202) 353–9074.

Attendance is open to the interested public, limited by the availability of space. Persons needing special assistance, such as sign language interpretation or other special accommodations, should notify the contact person listed below as soon as possible. Members of the public may submit written statements by mail, electronic mail, or facsimile at any time before or after the hearings to the contact person listed below for consideration by the Advisory Committee. All written submissions will be included in the public record of the Advisory Committee. Oral statements from the public will not be solicited or accepted at the hearings. For further information contact: Merit Janow, c/o Marianne Pak, U.S. Department of Justice, Antitrust Division, 601 D Street, NW, Room 10011, Washington, DC 20530, Telephone: (202) 353–9074, Facsimile: (202) 353–9985, Electronic mail: icpac.atr@usdoj.gov.

Merit E. Janow,

Executive Director, International Competition Policy Advisory Committee.

[FR Doc. 99–8648 Filed 4–6–99; 8:45 am]

BILLING CODE 4410–11–M

DEPARTMENT OF JUSTICE

Office of Justice Programs

[OJP(BJA)–1213]

RIN 1121–AA36

Prison Industry Enhancement Certification Program Guideline

AGENCY: Office of Justice Programs, Bureau of Justice Assistance (BJA), Justice.

ACTION: Issuance of final guideline.

SUMMARY: The Office of Justice Programs, Bureau of Justice Assistance (BJA), is issuing this final revision to its Prison Industry Enhancement Certification Program (PIECP) Guideline proposed for public comment on July 7, 1998, 63 FR 36710–36719. Under Title 18 U.S.C. 1761(c), BJA PIECP certification excepts participating agencies from certain Federal restraints placed on the marketability of prison-made goods by permitting the transport of such goods in interstate commerce and the sale of such goods to the Federal government. This Guideline addresses statutory amendments and reflects administrative experience gained by BJA since the last final PIECP Guideline published on March 29,1985 (50 FR 12661–64).

The publication of this Final Guideline is considered to be a Federal action that will not significantly affect the quality of the human environment. Therefore, preparation of an environmental impact statement is not necessary.

EFFECTIVE DATE: This Guideline is effective April 7, 1999; existing participants will have until April 7, 2000 to achieve compliance with all of the new requirements set forth in this Guideline except for those relating to the National Environmental Policy Act (NEPA). The new requirements implementing NEPA are effective immediately.

FOR FURTHER INFORMATION CONTACT: Jeffrey R. Hall, Law Enforcement Program Manager, Bureau of Justice Assistance, 810 Seventh Street, NW, Washington, DC 20531. Telephone: (202) 616–3255.

SUPPLEMENTARY INFORMATION:

Scope of Program Announcement

I. Introduction: Program Purposes and Objectives
II. Background of the Prison Industry Enhancement Certification Program (PIECP)
a. The Legislative History
1. Unregulated Prison Labor
2. Prisoner Idleness and Prisoners' Need for Job Skills Training
b. The PIECP Program
1. Current State of the Program
2. Future Challenges
c. Discussion of Comments
c. 1–11 (see Nos. pp 821–847)
III. Program Guidance
a. PIECP Purposes
b. Definitions
c. BJA's Initial Considerations for Determining Propriety of Work Pilot Project Certification
1. BJA's Exercise of Discretionary Authority To Define and Certify 50 Work Pilot Projects
2. Threshold Inquiry for Determining Applicability of PIECP Exception Status
d. Mandatory Program Criteria for PIECP Participation
1. Eligibility
2. Inmate Wages
3. Non-Inmate Worker Displacement
4. Benefits
5. Deductions
6. Voluntary PIECP Inmate Worker Participation
7. Consultation With Organized Labor
8. Consultation With Local Private Industry
9. Compliance With the National Environmental Policy Act (NEPA)
IV. PIECP Administration
a. Certificate Holders
1. Project Structure
2. Application Content
3. BJA Review
4. Standard or Provisional Certification
5. Certificate Holder Designation Authority
6. Certificate Holder Monitoring Responsibilities
b. Cost Accounting Centers' PIECP Exception Status
c. Compliance Reviews
1. Performance Reports
2. On-Site Monitoring Reviews
d. BJA's PIECP Administration
e. Exception Status Suspension/Termination
1. Notice of Possible Compliance Violation
2. Voluntary Compliance Agreements
3. Failure To Achieve Compliance and Effect of Non-Compliance
4. PIECP Exception Status Suspension and Termination

I. Introduction: Program Purposes and Objectives

The Prison Industry Enhancement Certification Program (PIECP), codified at 18 U.S.C. 1761(c), was first authorized by the Justice System Improvement Act of 1979, Pub. L. No. 96–157, 93 Stat. 1215. The PIECP was expanded from 7 to 20 pilot projects under the Justice Assistance Act of 1984, Pub. L. 98–473 § 609k(a)(1), 98 Stat. 2077, 2102. In 1990, The Crime Control Act of 1990, Public Law 101–647 § 2906, 104 Stat. 4789,4914, raised to 50 the number of PIECP projects that may be excepted by the Bureau of Justice Assistance (BJA) from certain Federal restrictions on the marketability of prisoner-made goods, including the Ashurst-Sumners Act (18 U.S.C. 1761(a)) and the Walsh-Healey Act (41 U.S.C. 35).

Since its inception in 1979, the PIECP program has certified 38 work pilot projects throughout the country. Prison administrators find PIECP participation an effective way to address idleness among ever-increasing prison populations and as a cost-efficient method for providing inmates with marketable job skills. Taxpayers benefit because PIECP wage deductions result in reductions in incarceration costs. Inmate wages benefit society, generally, in that deducted amounts are authorized to address victim compensation, inmate family support needs and taxes. Lastly, PIECP industries obtain broad market access for their products because they are excepted from the Ashurst-Sumners Act prohibition against the interstate transport of prisoner-made goods and from the Walsh-Healey Act prohibition against certain contract sales of prisoner-made goods to the Federal government.

BJA first issued a Final Guideline to implement this program on March 29, 1985, 50 FR 12661–64. After providing an opportunity for public comment on the revised Guideline on July 7, 1998 (63 FR 36710–19), the agency now publishes this Final Guideline to offer updated program clarification. In so doing, the legislative underpinnings of relevant laws are examined and the scope of their applicability is defined. Compliance expectations are explained as program guidance. Refined administrative practices reflect experience gained by BJA over the past 14 years. The background history, guidance definitions and administrative requirements described in this Guideline are specific only to the PIECP and have no bearing on or relationship to the development, goals or administrative practices of any other prison industry program.

II. Background of the Prison Industry Enhancement Certification Program (PIECP)

a. Legislative History

1. Unregulated Prison Labor

The 19th Century evolution of industrial capitalism and private sector use of prisoner labor spawned a number of conditions that adversely affected several major segments of society. By the turn of the 20th Century, these segments joined in an organized appeal to Congress and state legislatures nationwide. They collectively asserted that the production and distribution of unregulated prisoner-made goods in interstate commerce needed to be

eliminated or, at a minimum, controlled.

Human rights activists turned the public's attention to poor prison work conditions and inmate exploitation. Organized labor argued that the demand for prisoner-made products, anywhere, necessarily displaced a possible demand for the product of free labor. Free enterprise manufacturers at the time were disturbed because manufacturers of prisoner-made goods did not bear the burden of overhead costs borne by private industry competitors. Prisoner-made goods were sold at below market prices. The viability of private industry competition was thereby undercut. In December 1924, Secretary of Commerce Herbert Hoover held a conference on the subject of the ''ruinous and unfair competition between prison-made products and free industry and labor.'' 70 *Cong. Rec.* S656 (1928).

Then-Secretary Hoover authorized an advisory committee to study the problem. This committee issued a report to Congress in 1928 wherein Chairman of the Advisory Committee on Prison Industries, Arthur Davenport, submitted the following conclusions:

(1) Certain major factors in the normal cost of production which must be met by all manufacturers are entirely absent in the case of prison industries. If anything approaching normal efficiencies of operation can be attained with the use of prison facilities and labor, the total costs of production are . . . below those of the manufacturer who must meet large overhead expenses as well as employ free labor.

(2) It is the universal belief that prisoners should be usefully occupied whether as a part of their punishment or as a means of rehabilitation by teaching them the habits of industry. To this end nearly every State . . . provid[es] productive work for their prisoners . . .

(3) The volume of goods produced by prison labor is already very large in some lines, but as more prisoners are put to work, and the industries become more efficient, the output of our prisons will be greatly increased.

(4) The effect of placing on the open market a volume of goods which have been produced below normal costs, is to lower prices and disorganize the market * * * The increase in prison production which is predicted will exaggerate this evil and make it difficult if not impossible for manufacturers employing free labor to exist in trade where the prison output becomes heavy.

(5) The solution of this problem, if prison production is to continue * * * would seem to be the elimination, in one way or another, of the direct price competition of the prison products with so called ''free products''* * *. 70 *Cong. Rec.* S656 (1928).

In closing, Chairman Davenport urged that solutions be found, ''[o]therwise either prison industries must cease and prisoners kept in idleness or the manufacture of products competing with prison output will become impossible. Either of these developments would be disastrous * * *.'' *See* S. Rep. No. 344, 70th Cong., 1st Sess., re-printed, *Cong. Rec.* S656 (Dec. 15, 1928), ''Statement of Prison Labor Problems as Shown by Report of Senate Committee.''

Even if a state prohibited its own correctional institutions from producing and marketing prisoner-made goods, that same state had no jurisdiction to control such goods produced in other states, transported in interstate commerce and sold within its boundaries. As an initial solution to this problem, Congress enacted the Hawes-Cooper Act in 1929, Pub. L. 70–669, 45 Stat. 1084, recodified by Pub. L. 95–473, 92 Stat. 1449 (1978) [formerly codified at 49 U.S.C. 11507, omitted in the revision of Title 49 by Pub. L. 104–88, Title I § 102(a), 109 Stat. 804 (effective January 1, 1996); *See* S. Rep. No. 104–176]. This law divested prisoner-made products of their interstate character upon their arrival in the state of their destination and permitted the laws of that state to become operative with respect to the sale and distribution of such products. It was described, at the time of enactment, as an enabling act because it did not prohibit the transportation of prisoner-made goods or force the enactment of state legislation.

In 1935, Congress enacted the Ashurst-Sumners Act, Pub. L. 74–215, 49 Stat. 494 (1935), which authorized Federal criminal prosecutions of violations of state laws enacted pursuant to the Hawes-Cooper Act. Subsequent amendments to this law, including Pub. L. 76–851, 54 Stat. 1134 (1940), strengthened Federal enforcement authority by making any transport of prisoner-made goods in interstate commerce a Federal criminal offense. As amended, 18 U.S.C. 1761(a) now provides:

> Whoever knowingly transports in interstate commerce or from any foreign country into the United States any goods, wares, or merchandise manufactured, produced, or mined, wholly or in part by convicts or prisoners, except convicts or prisoners on parole, supervised release, or probation, or in any penal or reformatory institution, shall be fined under this title or imprisoned not more than two years, or both [herein referred to as the Ashurst-Sumners Act].

Certain prisoner-made products were excepted, by statute, from the Ashurst-Sumners Act prohibition, including ''agricultural commodities or parts for the repair of farm machinery'' as well as ''commodities manufactured in a Federal, District of Columbia or State institution for use by the Federal Government, or by the District of Columbia, or by any State or Political subdivision of a State or not-for-profit organizations.'' Title 18 U.S.C. 1761(b).

The Walsh-Healey Act, 49 Stat. 2036 (1936), as amended in 1979 by Pub. L. No. 90–351, § 827(b) and codified at 41 U.S.C. 35, also controls the production of prisoner-made goods. This statute prohibits the use of prisoner labor to fulfill general government contracts which exceed $10,000. BJA certification pursuant to § 1761(c) excepts prisoner-made goods produced at PIECP work pilot projects from the Walsh-Healey Act contracting restrictions, as well as the Ashurst-Sumners Act interstate transportation restrictions.

2. Prisoner Idleness and Prisoners' Need for Job Skills Training

The PIECP exception to the Ashurst-Sumners and the Walsh-Healey Act restrictions was introduced into the Senate in 1979 after the 1978 Pontiac, Illinois prison riot. In the wake of that uprising, Senator Charles Percy (R–Ill.) stated:

> [L]ast summer in Pontiac, Illinois, our worst fears about the conditions in the Nation's prisons erupted into a nightmarish reality. The Pontiac prison riot of 1978 ended with three guards dead, three others seriously wounded, and $4 million in property damage * * *.
>
> The shopping list of problems and deficiencies in our prison system is long and well known. Overcrowding, old and obsolete facilities, lack of training or educational programs, crime within prison walls, frustration on the part of guards and inmates are all a part of the dreary picture * * *. Recidivism is now a substantial element in our overall crime rate, and prisons are often accurately characterized as a ''school for crime,'' rather than a deterrent to crime * * *. 125 *Cong. Rec.* S11834 (1979).

These concerns caused Congress to take measures to encourage prison industries, provided that they not engage in unfair competition with private sector business and labor. Senator Percy's bill, now referred to as the Prison Industries Enhancement Act, Section 827 of the Justice System Improvement Act of 1979, Pub. L. 96–157, § 827(a), 93 Stat. 1215, was enacted on December 27, 1979. As amended, it now offers 50 certified projects an opportunity to participate in the

interstate market, provided certain safeguards to free-world labor and industry, and to prisoner-workers themselves, are met. *See* The Crime Control Act of 1990, Pub. L. 101–647, § 2906, 104 Stat. at 4914.

In describing the purpose of his introduced legislation, Senator Percy explained (125 *Cong. Rec.* S11834 (1979)):

My amendment would do two basic things: First, it would authorize the [BJA] to encourage development of pilot demonstration projects for prison industry at the State level, involving private sector industry * * *. Under this approach, prison programs benefit from the private business, develop access to new markets, and attract needed capital. The goal of these pilot projects would be to create as realistic a working environment as possible within the prison walls, while enabling an inmate to become more self-sufficient to the benefit of himself, the prison system, and the taxpayer.

Secondly, my amendment creates a partial exemption to two Federal laws which severely restrict the ability of State prison industries to market their goods * * *. When these laws were enacted decades ago, they represented significant reforms against exploitation of prison labor. Over the years, however, they have developed into heavy-handed roadblocks to growth among * * * prison industry programs * * *.

My amendment would provide limited exemptions to these restrictions where inmates have been paid a wage comparable to that paid for similar work in the private sector in the locality * * *.

The statutory exception that was enacted to establish PIECP is codified at 18 U.S.C. 1761(c):

* * * [the Federal marketability prohibitions] shall also not apply to goods, wares, or merchandise manufactured, produced, or mined by convicts or prisoners who—

(1) Are participating in one of not more than 50 non-Federal prison work pilot projects designated by the Director of the Bureau of Justice Assistance; * * *

To become eligible for Bureau of Justice Assistance (BJA) certification, an applicant department of corrections must comply with specified statutory requirements. It must pay participating prisoners ''wages not less than that paid for work of a similar nature in the locality in which the work was performed'' and cannot take more than 80 percent in deductions from gross wages for specified purposes including taxes, reasonable charges for room and board, family support and victims' compensation. 18 U.S.C. 1761(c)(2).

Certain other conditions of employment must also be met. An eligible applicant cannot deprive participating offenders, solely because of their status as offenders, of the right to participate in benefits made available by the Federal or state government to other individuals on the basis of their employment, such as workmen's compensation. Title 18 U.S.C. 1761(c)(3). PIECP inmates must also participate on a voluntary basis and must have agreed to the specific deductions made from gross wages pursuant to 18 U.S.C. 1761(c)(2), and all other financial arrangements resulting from participation in such employment. Title 18 U.S.C. 1761(c)(4).

The note following 18 U.S.C. 1761, although not codified, is public law and adds two additional PIECP requirements on certified prison industries. The note requires participating prison industries to consult with local union organizations prior to initiating any project qualifying for a 1761(c) exemption. Also, the qualifying applicant must ensure that paid PIECP inmate employment will not result in the ''displacement of employed workers, or be applied in skills, crafts, or trades in which there is a surplus of available gainful labor in the locality, or impair existing contracts for services.'' The Justice System Improvement Act of 1979 added these provisions which became § 827(c) of the Omnibus Crime Control and Safe Streets Act of 1968. *See* Pub. L. 96–157, 93 Stat. 1215, reprinted in 1979 U.S.C.C.A.N. 2471. In 1984, § 827(c) was redesignated § 819 of the Omnibus Crime Control and Safe Streets Act of 1968, as amended. *See* Pub. L. 98–473, 98 Stat. 2093.

If all eligibility requirements are met and an applicant acquires BJA certification, the agency is thereafter authorized to operate irrespective of Federal prohibitions on the marketing of state prisoner-made goods. Conversely, non-compliance with these statutory eligibility requirements could expose an industry to criminal prosecution under the Ashurst-Sumners Act. Title 18 U.S.C. 1761(a).

b. The PIECP Program

1. Current State of the Program

Currently, 38 departments of correction or umbrella authorities are PIECP Certificate Holders. Under the Justice System Improvement Act of 1979, Arizona, California, Idaho, Kansas, Minnesota, Nevada and Utah were certified. In 1984, under the Justice Assistance Act of 1984, 13 prisons work pilot projects were certified in: Alaska, Belnap County (NH), Connecticut, Iowa, Maine, Missouri, Nebraska, New Mexico, Oklahoma, Oregon, South Carolina, Strafford County (NH) and Washington State. Under the Crime Control Act of 1990, the following additional departments of correction were certified: Colorado, Delaware, Florida, Hawaii, Indiana, Louisiana, Maryland, Montana, North Carolina, Ohio, Red River County (TX), South Dakota, Tennessee, Texas, the Texas Youth Commission, Vermont, Virginia, Washington State Jail Industries Board and Wisconsin.

About 145 private sector businesses now work in partnership with PIECP certified projects to employ about 2,800 inmates. Either the department of corrections or the private sector enterprise retains project authority to direct and control inmate labor, depending on the management model used. Project implementation has resulted in the production of myriad products including such items as furniture, sheet metal, video equipment, clothing, food products, office products, mattresses, draperies, crutches and road signs. In addition, although service industries were not a threat to the private sector in 1935 and thus, were not included within the scope of the Ashurst-Sumners prohibition, a number of service industries have elected to comply with the PIECP requirements.

Between January 1979 and September 1998, PIECP projects generated approximately $113.7 million in gross inmate wages. Nearly half of this amount was diverted to non-inmate recipients: $8.9 million was deducted for victims of crime, $25.7 million was deducted for room and board payments, $5.8 million was deducted for family support and about $13.7 million was withheld in local, State and Federal taxes.

BJA monitors the performance of PIECP work pilot projects to ensure that they operate in full compliance with all legislative and administrative program requirements. Under a grant to the Correctional Industries Association (CIA), prison industry and other professionals conduct regular, on-site reviews of all PIECP projects. BJA responds to matters involving possible non-compliance by taking appropriate remedial action such as providing technical assistance or proposing a corrective action plan.

2. Future Challenges

PIECP is used nationwide as a cost-efficient way to provide inmates with work experience and training in marketable job skills, as well as to reduce idleness among growing prison populations.

Over time, the limit on the authorized number of pilot projects has been raised to meet the demands of interested applicants. When Congress last increased the project ceiling to 50, the House took into consideration a waiting

list of states and counties that had wanted to participate and noted that ''the demand for certification by state and local governments indicates a need for this amendment which will enable the program to expand and other jurisdictions to apply.'' H.R. (I), 101st Cong. 202 (1990).

BJA administers PIECP with the objective of making participation available to as many qualified applicants as possible, within limits imposed by the statutory ceiling. This Guideline provides projects with clarity as to Federal participation requirements, as well as programmatic flexibility to allow for PIECP Project growth in ways that respond to local needs. The Federal requirements are intended to ensure that the interests of local business and organized labor are protected. In this way, BJA's administrative practices address concerns reflected in the legislative history pre-dating the onset of Federal regulation of prisoner-made goods.

Finally, this revised Guideline addresses novel issues presented by new PIECP participants, the private sector prisons. These entities are unique in that they render an essential service traditionally undertaken by public agencies and they do so for profit. Thus, BJA has altered some PIECP program requirements to insure program implementation remains consistent with Congressional intent. Congress enacted PIECP to introduce public departments of correction to private sector profit-making enterprises. Therefore, private prisons are invited to participate in PIECP only as Cost Accounting Centers (CACs) designated under the authority of departments of correction.

c. Discussion of Comments

BJA published a proposed Guideline in the **Federal Register** on July 7, 1998 for public comment. Written comments from public and private organizations were received. All comments have been considered by the BJA in this publication. This Guideline is final. The following is a summary of substantive comments and BJA's response.

1. Background on PIECP

Comment: BJA should retain the legislative history and background section. It is informative and useful.

BJA should explain that the background section does not accurately describe present day political, social or economic concerns regarding the implementation of prison industry programs.

Response: BJA provides the background and legislative history section to illustrate social, political and economic concerns that were predominant prior to 1940, before the Federal government first began regulating, as a criminal matter, the interstate transport of prisoner-made goods, as well as such concerns as they existed prior to the 1979 enactment of the PIECP exception to 18 U.S.C. 1761(a). BJA provides this background to inform PIECP Cost Accounting Centers about Congress' intent when developing the program's statutory requirements and exception authority.

Accordingly, no substantive change was made in the background section of the Guideline.

2. Program Purposes

Comment: BJA should modify its program purposes to add, as a purpose, introducing government to private sector profit-making enterprises. More specifically, BJA should endorse private sector prison options as a specific way to introduce state and local government agencies to private sector profit-making enterprises.

Response: Consistent with the legislative history of the PIECP, BJA exercises its administrative authority only to endorse PIECP as a cost-efficient means to address inmate idleness and to provide inmates with work experience and training in marketable job skills. Whether private sector partnerships or private prison contracts are suitable prison industry options for any given jurisdiction, is a state and or local matter for determination. State and local interests are uniquely poised to identify appropriate private sector profit-making enterprises, if any, to partner with prison industries. Thus, as a Federal agency, BJA is not prepared to adopt such a program purpose.

Accordingly, no change was made in the program purposes provision of the Guideline.

3. Definitions

Comment: BJA should modify the definitions so that references to departments of corrections include public or not-for-profit agencies sanctioned under state law to administer the Prison Industry Enhancement Certification Program.

BJA should add a definition of ''chief state correctional officer,'' as the term is used in reference to the room and board deduction, so that it encompasses umbrella authorities where such models have been certified by BJA as prison work pilot projects.

With respect to the minimum wage definition, BJA should state that this PIECP program wage threshold is in no way intended, in and of itself, to ascribe to inmate workers ''employee'' status for purposes of other state and Federal laws.

BJA should re-define the locality definition. The proposed definition, which defers to state agencies for the making of such determinations, is too vague and subjective.

Response: BJA concurs with a number of recommendations to enhance the clarity of terms used in the Guideline. A definition for the term ''departments of correction'' is incorporated to clarify that state and local government agencies, and the instrumentalities thereof, including not-for-profit entities sanctioned under state law to administer PIECP, are eligible as potential PIECP Certificate Holders. A definition of the term ''chief state correctional officer'' is added to enhance guidance with respect to model specific implementation of the room and board deduction. Also, the scope of the minimum wage definition is more specifically defined in relation to PIECP purposes and the operation of other laws.

The locality definition has implications both with respect to the inmate wage requirement and the prohibition against private sector employee displacement. BJA directs all Cost Accounting Centers to obtain non-displacement projections and prevailing wage determinations from their appropriate state agencies and, in so doing, extends to the states an opportunity to locally influence implementation of the Federally authorized PIECP Project. BJA expects that by extending this opportunity, the states will exercise their authority so as to protect the interests of local labor groups and private sector competition. This approach was adopted to vest state agencies with authority and flexibility to respond to uniquely local economic trends and conditions. Accordingly, no change to the locality definition was made.

4. Eligibility

Comment: BJA should allow private prisons to independently qualify as Certificate Holders. Alternatively, restrictions affecting the designation of private prison industries, as Cost Accounting Centers (CAC), should be eased.

Umbrella authorities should not be allowed to qualify as eligible Certificate Holders. The certification of umbrella authorities circumvents the 50 project limit imposed on the program by Congress.

Response: Title 18 U.S.C. 1761(c)(1) authorizes BJA to exercise broad discretion in certifying PIECP prison work pilot projects. Two significant

considerations, however, weigh in favor of limiting Certificate Holder eligibility only to departments of correction and not private prisons. First, the legislative history of the PIECP reflects Congress' desire to craft an inmate work vehicle to advance state and local government interests, and specifically their need to gainfully occupy growing prison populations in marketable job skills. Second, as PIECP implementation could impact state and local private sector interests, BJA believes that the protection of those interests would be best served by reserving certification for those agencies which, by their very nature, are accountable to the public.

BJA will not authorize any PIECP certified project to designate CACs outside of its jurisdictional boundaries because the Bureau defers to individual state legislatures for determinations as to whether PIECP should be authorized within their jurisdictions. If a state legislature decides not to authorize PIECP implementation in public facilities, private facilities ought not be authorized to implement PIECP, in that same state, through a designation authorized by a Certificate Holder located in another state. BJA, however, incorporates amendments to the Final Guideline to allow any given state Certificate Holder to designate CACs within private prisons operating within that same state, even in the absence of a contract for incarceration services between that state and the private prison seeking to participate in PIECP. The BJA form used to accomplish the designation of a CAC within a private prison must reflect express approval of the designation by the Chief State Correctional Officer for the state in which the private prison CAC is located. *See* Section IV.(a)(5), *infra.*

CACs designated within private prisons must also retain on-file documentation reflecting approval of PIECP inmate worker participation by the state and local jurisdictions in which the PIECP inmate workers were convicted. In order to issue such approvals, the remanding state and local jurisdictions must also hold PIECP certificates. This requirement insures continuity of the necessary PIECP project authorization vis-a-vis the PIECP inmate workers, and is responsive to the statutory project ceiling number.

If inmate workers could not participate in PIECP within the boundaries of the state and local jurisdictions in which they were convicted, they should not be allowed to participate in PIECP in another state or local jurisdiction through an agreement for private prison incarceration services. Alternatively stated, state and local jurisdictions cannot be allowed to participate in PIECP indirectly through a contract with a private prison that has a PIECP-designated CAC, if they choose not to participate in PIECP directly, *i.e.*, had they incarcerated their inmates within their own state and local jurisdictional boundaries.

Title 18 U.S.C. 1761(c) offers BJA broad discretion with respect to defining a prison work pilot project for PIECP eligibility purposes. Umbrella authorities may represent a mix of agency members such as state and local departments of correction, and youth authorities. Any of these agency members may, through their respective umbrella authorities, designate CACs within themselves or private prisons located in their jurisdictional areas. In order to qualify for PIECP certification, umbrella authorities must be able to assure BJA that a central administration of the CACs can be accomplished to insure project-wide compliance with the guideline and the statute as well as responsible exercises of designation/undesignation authority. Since the inception of PIECP in 1980, BJA has certified several umbrella authorities. During that same period of time, Congress was advised of such projects and consistently increased the project ceiling. BJA interprets such action as tacit approval of BJA's certification of umbrella authority models.

Accordingly, changes are made in the eligibility provisions to ease restrictions on Certificate Holder designation of CACs within private prisons located within the Certificate Holder's jurisdiction. Private prisons are ineligible as independent PIECP Certificate Holders.

5. Inmate Wages

Comment: Authors of two comments claim that PIECP wage rates do not equal labor costs: BJA should allow Cost Accounting Centers (CACs) to make adjustments in prevailing wage rates to address the hidden, unusual costs of doing business in a prison environment such as the cost of transportation to rural areas, reduced production levels due to rapid turnover, and added expenses of worker training and start-up. Because these cost variables are significant and inherent in doing business within prisons, the PIECP wage requirement is not necessary to ''level the playing field'' with private sector competition.

From the perspective of one organized labor group, the proposed Guideline is an improvement over the 1985 PIECP guideline. BJA, however, is urged not only to encourage, but to require CACs to implement salary wage plans based on worker competency and seniority.

Regarding the wage self-determination option, in the proposed guideline, the following diverse comments were received: this option is an improvement in that it allows for CAC implementation in instances where state agencies are non-responsive to requests for prevailing wage determinations; this option imposes too great of an administrative burden on CACs; this option provides participants with an opportunity to avoid obtaining state agency wage determinations.

In instances where a private sector partner has both a non-inmate operation and a PIECP CAC in the same locality, the partner should be permitted to bypass a state agency's wage determination and use relevant non-inmate wage scales with respect to PIECP inmate workers performing the same job function.

BJA should clarify the meaning of the term of ''notable tasks,'' as it is used in the Guideline with respect to identifying which inmate workers should be paid a PIECP wage.

Response: Title 18 U.S.C. 1761(c)(1) expressly states that PIECP wages must be paid at a rate which ''is not less than that paid for work of a similar nature in the locality in which the work is performed.'' PIECP wage determinations must be based only on comparable non-inmate worker wages for performing work of a similar nature. Gross wages earned by PIECP inmate workers may be reduced only through an application of the four authorized wage deductions specified in 18 U.S.C. 1761(c)(2). Thus, the plain language of the PIECP exception statute provides BJA with no authority to allow wage deductions in addition to those set forth in 18 U.S.C. 1761(c)(2) and for the purpose of addressing the unusual costs of doing business in a prison environment, however meritorious such proposed adjustments might be.

The language of 18 U.S.C. 1761(c)(3) requires PIECP projects to pay wages based only on private sector wage amounts for performing similar work and it does not, as a matter of law, require the implementation of salary plans. BJA added this policy-based encouragement to advance program objectives.

The self-determination option, as reflected in the proposed guideline, was presented to address a recurring challenge confronting many PIECP Cost Accounting Centers (CACs). On occasion and through no fault of their own, CACs are unable to obtain timely, state agency responses to requests for wage determinations. The self-

determination option, which is available only when state non-responsiveness occurs, assists CACs to achieve compliance without relying on a determination by a third party. The method presented requires only the minimum amount of data collection and analysis necessary to yield a defensible, rationally-based wage determination. Availability of the self-determination option prevents CACs from paying a Federal minimum wage—the lowest possible PIECP wage, indefinitely, when payment of such a wage rate is unwarranted and the state remains non-responsive to wage determinations requests.

To ease the impact of PIECP implementation on any given locality's ecomony and labor force, BJA reserves two opportunities for states to affect the implementation of the Federal PIECP program within state boundaries. The requirement that proposed CACs must obtain wage rates from the relevant state agencies, is one of those opportunities. BJA reserves this opportunity for state participation in the program, without exception, to insure CACs respond to relevant, locally-based input from an objective source.

BJA introduces the Guideline concept of ''notable tasks'' as a way to assist CACs in identifying inmate workers to whom a PIECP prevailing wage should be paid. Questions arise as to whether inmates performing support functions, such as janitorial and maintenance services, necessary to CAC operations must be paid a PIECP wage. A more specific definition, in this regard, is not possible without compromising flexibility in the application. The Guideline offers specific administrative direction by identifying relevant considerations for determining whether a given task is ''notable.''

Accordingly, no change was made in the wage payment provisions of the Guideline.

6. Non-Inmate Worker Displacement

Comment: One representative from organized labor claimed that prisoner labor should never be allowed to compete with free-world labor because it undermines the private sector labor force and inmate rehabilitation. Another representative of organized labor generally endorsed the Guideline and the revised non-inmate worker displacement requirement, stating that it is an improvement over that which was issued in 1985.

The presumption of non-compliance, applicable when a private sector partner employs non-inmate and inmate workers in the same locality, is too vague and too restrictive on private sector partners.

The general language of this requirement makes it difficult to measure displacement in instances where other non-employee, non-inmate workers perform similar jobs or skills in the same locality. Any PIECP operation is likely to affect the private sector marketplace and, consequently, private sector jobs. The requirement ought not be construed in such a way so as to prohibit PIECP companies from engaging in normal business operations such as bidding for contracts on the open market after they have been designated as participating in a PIECP project. Also, BJA should not impede or discourage successful PIECP operations, already designated, from continuing operations even when there is a subsequent general downturn in the economy and, arguably, *de facto* displacement of non-inmate workers performing similar work in the locality.

This requirement is too restrictive in that it prohibits PIECP partners from outsourcing entry level jobs and redirecting their current private sector workforce toward higher skill level jobs.

The Guideline encourages potential Cost Accounting Centers to develop new jobs in a locality; this should not be implemented so as to adversely affect a CAC which decides not to follow the encouragement.

Response: Congress directs BJA to implement the PIECP program, a prison industry program that places prison made goods in competition with the private sector. BJA has no discretion to exercise in determining whether or not to implement this program.

One BJA purpose in revising the Guideline is to improve the program's responsiveness to organized labor's concerns. The agency is pleased that a segment of the labor community views its interests as better served through the re-issuance of the PIECP Guideline.

BJA acknowledges that implementing the non-inmate worker displacement prohibition may appear to work at cross purposes with encouraging the commercial success of PIECP Cost Accounting Centers (CACs). The agency must respond to a broad statutory mandate to insure that PIECP does not impair or displace private sector workers and is not applied in skills in which there is a surplus of available gainful labor. However, BJA cannot accomplish PIECP implementation if CAC's are prevented from attaining commercial success by engaging in typical competitive market practices. To address this concern, the guidance language is modified to reflect BJA's expectation that PIECP CACs will engage in typical business operations, such as bidding for contracts on the open market after project initiation.

While compliance is a continuing CAC responsibility, a violation of the non-displacement requirement is more likely to occur and is more discernable just prior to and immediately following CAC implementation than thereafter. For this reason, BJA will scrutinize CAC compliance with this provision just prior to and within one year following CAC implementation.

The agency devised a presumption of displacement which may be applicable in instances where a private sector partner retains non-inmate workers in the same locality. This presumption is modified in this Final Guideline to provide partners with a degree of flexibility to reallocate resources to their optimum use. Specifically, the presumption may be overcome if the private sector partner can demonstrate that non-inmate workers have been retained by the private sector partner in jobs at pay rates equal to or greater than that received in the previous position, that non-inmate employees have been provided an adequate opportunity for effective training in any new job skills and that the subject non-inmate employees are being retained by the private sector partner under reasonably similar or improved employment conditions.

BJA policy encouragement regarding the creation of new PIECP jobs is not a mandate. CACs which do not bring new jobs to their localities will not be penalized. For obvious reasons, however, CACs generating new jobs are easier for BJA to evaluate and are less likely to be the subject of local criticism.

Accordingly, changes are made in the non-inmate worker displacement provision to clarify the scope of the prohibition and to not unduly impede business decisions that lend themselves to effective commercial management and success of PIECP Cost Accounting Centers.

7. Benefits Requirement

Comment: A resolution of inconsistent Social Security requirements imposed on PIECP models should be accomplished at the Federal level between BJA, the Social Security Administration and the Internal Revenue Service. The disparate treatment of customer and employer models is arbitrary. Both models should be treated the same way for purposes of requiring projects to provide inmates with Social Security coverage.

BJA should clarify its position with respect to imposing the Federal

Unemployment Tax Act on PIECP models as a benefits requirement.

Response: The benefits requirement, as outlined in the proposed Guideline, elicited the greatest number of comments. Several Federal laws apply to wages earned by inmates in penal institutions. BJA, therefore, sought a Guideline review from both the Social Security Administration (SSA) and the Internal Revenue Service (IRS) to ascertain whether the PIECP benefits requirement, as proposed, was consistent with comparable laws administered by those Federal agencies.

Both the IRS and the SSA concluded that BJA's benefits requirement is consistent with comparable laws set forth in the Social Security Act, 42 U.S.C. 410(a)(7) and 418(c)(6)(B), and the Internal Revenue Code. Services performed in an institution by an inmate in the employ of a State, a political subdivision, or a wholly-owned instrumentality are excepted from Social Security employment by 26 U.S.C. 3121(b)(7). Section 3121(u)(2)(B)(ii)(II) also provides that such services are not subject to the Medicare tax.

In contrast to those inmate services performed in the employ of a state or governmental entity, there is no IRS or SSA exception for services of inmates performing services in the employ of a non-governmental entity (for example, a private corporation operating a prison or a private corporation operating under the PIECP employer model). PIECP Employer models must generally provide inmates with Social Security coverage.

BJA retains the customer and employer models to implement the PIECP benefits provision, 18 U.S.C. 1761(c)(3), in a manner consistent with other Federal laws addressing inmate wages. Specifically, the models are necessary in order to accord states and other governmental entities the Social Security employment or coverage exception status, as recognized by the IRS and the SSA. BJA will monitor and evaluate Cost Accounting Centers (CACs) in accordance with the guidance set forth in this Guideline, but will defer to the expertise of both the IRS and SSA should either of those agencies reach another conclusion with respect to the appropriate benefits treatment of inmate wages earned at any given CAC.

In the case of services performed by PIECP inmates, regardless of whether services are being performed under the customer or employer model, Federal Unemployment Tax Act taxes do not apply to such services. *See* Section 26 U.S.C. 3306(c)(21) which excepts from employment ''service performed by a person committed to a penal institution.''

Accordingly, no changes are made in the benefits requirement of the Guideline.

8. Deductions

Comment: BJA ought to expressly authorize the use of room and board deduction funds for the purpose of lowering costs otherwise incurred to maintain and operate a PIECP program.

The term ''Chief State Correction Officer'' should be amended to also include ''responsible umbrella authorities.''

Private prisons managing PIECP Cost Accounting Centers (CACs) should be required to demonstrate that any benefit derived through the taking of room and board deductions is passed on to states which provide public funds to cover such costs.

The authorized deduction for victims compensation ought to be made available to address a PIECP inmate's legal obligations to pay victim restitution.

Response: Consistent with the statutory mandate addressing the room and board deduction, BJA defers to state determinations—as reflected in regulations issued by Chief State Correctional Officers—with respect to determining the amounts of such deductions as well as identifying the specific needs to which such deducted amounts may be directed. BJA has authority to review room and board deductions to insure the amounts deducted are reasonable and are used to defray the costs of inmate incarceration. Specific amount determinations and budget line item uses are issues more appropriately determined at the state and local level.

In instances where the Certificate Holder is an umbrella authority, possibly composed of diverse state as well as local agencies, the umbrella authority may itself issue policy on this matter to guide its multijurisdictional membership. A definition of ''Chief State Correctional Officer'' is added to accommodate the administration of this deduction by such models.

The room and board deduction was authorized by Congress to lower incarceration costs otherwise borne by the public. Since private prison PIECP inmates' room and board expenses might otherwise be addressed in contracts for incarceration services between private prisons and public agencies, BJA requires private prison CACs to obtain written approval from their respective public agency clients before taking the room and board deduction. In devising this requirement, BJA insures notice of this possible revenue source is received by appropriate public agencies without unduly burdening contractual relations to which it is not a party.

BJA broadens its interpretation of the victims compensation authorized deduction to also include deductions deposited in funds established by law to facilitate victim restitution. Compensation and restitution serve substantially the same purpose in providing victims with financial redress for expenses incurred as a result of crime.

Although the statutory PIECP authorization, 18 U.S.C. 1761(c), does not require CACs to make tax deductions, the Internal Revenue Code requires federal income tax withholding if payments of wages are made to employees. BJA encourages all CACs to take whatever deductions, which may be necessary to comply with all Federal laws, including the Internal Revenue Code. As with the PIECP benefits provision, BJA defers to the IRS as the final authority with respect to making CAC tax withholding determinations.

Accordingly, changes are made in the deductions provision to clarify that the victims deduction may, in some instances, be used to address a PIECP worker's restitution obligations. Guidance regarding room and board deduction is simplified because of the inclusion of a definition for the term ''Chief State Correctional Officer.'' Clarification is also provided with respect to tax deductions which may be necessary to facilitate CAC compliance with the Internal Revenue Code.

9. Voluntary Inmate Participation

Comment: BJA should accept inmate signatures on deduction notices as evidence of voluntary inmate participation. BJA should not require the execution of new inmate voluntary participation agreements each time the deductions affecting inmate wages are changed.

Response: The 18 U.S.C. 1761(c) expressly requires not only voluntary inmate employment, but also inmate agreement, in advance, of all deductions and financial arrangements affecting gross wages. While an inmate's signature on a notice form may signify receipt of notice, it does not necessarily reflect inmate agreement. Thus, the proposal is inadequate to insure compliance with the statutory requirement.

Accordingly, no change is made to the voluntary participation provision.

10. Consultation With Local Labor and Business

Comment: The consulation requirements reflected in the guideline exceed BJA's statutory authority. The requirements are overly burdensome and should not be implemented so as to compromise the competitive capablity of the Cost Accounting Centers (CACs).

BJA should accept as compliance with the labor consultation requirement, the presence of an organized labor representative on the board of an umbrella authority PIECP project.

With respect to consulation with organized labor, BJA should routinely require CAC consultation with both state and local union representatives. CACs should also be required to maintain documentation of such consultation, on file.

Response: BJA's labor consultation requirement is consistent with the mandate reflected in the statutory note to 18 U.S.C. 1761(c). The provision requiring notice to local business, is consistent with a provision reflected in the 1985 guideline as well as the legislative history of the program exception. In this revised Guideline, BJA provides specific guidance on the minimum amount of information necessary to insure provision of adequate consultation; it includes general information on the scope and nature of the proposed Cost Accounting Center, the proposed initiation date as well as notice of the requirement and an invitation to comment. Implementation of the consultation requirements is not intended to compromise the market competitiveness of a CAC, but to advise local economic interests which may be impacted by the project.

Labor consultation cannot automatically be achieved through labor participation on the board of a PIECP project. Such representation does not necessarily insure notice of the proposed CAC activities to the relevant local union representative in the locality to be affected.

While BJA issues this guidance to insure provision of consultation to a labor organization (*i.e.*, notice to a state labor organization, in the event a local organization cannot be identified or does not exist), BJA has no statutory authority to require notice to both state and local labor organizations on a routine basis.

Accordingly, no change is made to the consultation provisions.

11. Compliance With the National Environmental Policy Act (NEPA)

BJA should allow PIECP projects to defer to state environmental requirements and not impose a new national requirement.

BJA should provide Cost Accounting Centers (CACs) with technical assistance to facilitate compliance with this program requirement.

Response: BJA has no authority to allow CAC applicants to defer to state environmental requirements as a substitute for implementing the provisions of the National Environmental Policy Act (NEPA), 42 U.S.C. 4321–4347 (NEPA). BJA decisions on proposed PIECP certifications and designations consitute ''Federal actions'' as defined by 40 C.F.R. 1508.18 of the Council on Environmental Quality's (CEQ) regulations for implementing NEPA. As such, BJA has a federal obligation to insure that prior to decisions being made on requested certifications and designations, BJA implements the appropriate provisions of the CEQ regulations. These Federal implementation responsibilities, which can be shared with but cannot be delegated to Federal program applicants, have existed since the enactment of NEPA.

The technical assistance needs of CACs will be addressed through BJA, itself, as well as its contractor, the Correctional Industries Association.

Accordingly, no change was made to the proposed PIECP provision implementing the NEPA.

As a result of public review and comment, the final ''Prison Industry Enhancement Certification Program'' Guideline is revised to read as follows:

III. Program Guidance

a. PIECP Purposes

- To provide a cost-efficient means to address inmate idleness and to provide inmates with work experience and training in marketable job skills. BJA encourages private sector PIECP partners to consider post-incarceration employment to PIECP inmate workers.
- Through inmate wage deductions, to increase advantages to the public by providing departments of correction with a means for collecting taxes and partially recovering inmate room and board costs, by providing crime victims with a greater opportunity to obtain compensation, as well as by promoting inmate family support.
- Through PIECP participation conditions, to prevent unfair competition between prisoner-made goods and private sector goods.
- To prevent the exploitation of prisoner labor.

b. Definitions

Benefits refers to inmate benefit coverage required by 18 U.S.C. 1761(c)(3). PIECP projects must provide inmate workers appropriate benefits comparable to those made available by the Federal or state government to private sector employees. The scope of appropriate benefits coverage is impacted by whether the Cost Accounting Center is structured as an employer or customer model and whether the inmate labor work force is controlled by a public agency or the private sector.

BJA refers to the Bureau of Justice Assistance within the Office of Justice Programs, U.S. Department of Justice.

Certificate Holder refers to a department of corrections, or an alternate umbrella authority, which is approved by BJA for PIECP Project certification. Certificate Holders assume monitoring and designation responsibilities with respect to their designated Cost Accounting Centers. All PIECP prisoner-made goods are produced within Cost Accounting Centers that a Certificate Holder designates within itself, private prisons located in the same state or jurisdiction or, in the case or an umbrella authority, within its membership agencies.

Certification refers to an exercise of BJA's discretionary authority to designate a Prison Work Pilot Project pursuant to Title 18 U.S.C. 1761(c). BJA may issue either standard or provisional certifications to applicant projects. BJA certified projects are excepted from certain Federal marketability restraints on the transport of prisoner-made goods in interstate commerce, as provided in 18 U.S.C. 1761(a), and sales to the Federal government in excess of $10,000, 41 U.S.C. 35.

Chief State Correctional Officer refers either to the highest correctional officer for the jurisdiction in which the certified work pilot project is located or, with respect to umbrella authorities that control PIECP CACs within a mix of state and local jurisdictions, the authorities themselves.

Cost Accounting Center (CAC) refers to a distinct PIECP goods production unit of the industries system that is managed as a separate accounting entity under the authority of a Certificate Holder. All PIECP production activities are conducted within the context of a designated CAC which, generally, is structured either as a customer or employer model for purposes of determining PIECP inmate benefits. All CACs must operate in compliance with the provisions set forth in 18 U.S.C. § 1761(c) and this Guideline.

Customer Model is a form of a PIECP Cost Accounting Center management structure. In this model, the private sector is engaged in a CAC enterprise only to the extent that it purchases all or a significant portion of the output of a prison-based business owned and operated by a governmental entity, political subdivision or an instrumentality thereof. A customer model private sector partner assumes no major role in industry operations, does not direct production and has no control over inmate labor. These functions are performed, rather, by a department of corrections.

Deductions. CACs may elect to take deductions from a PIECP inmate worker's wages for certain authorized items. Deductions from PIECP inmate gross wages, if taken, may be made only for those items specified in 18 U.S.C. 1761(c)(2), including: payment of taxes, reasonable charges for room and board, allocations for family support and contributions to any funds established by law to compensate victims of crime (no less than 5 percent and no more than 20 percent). In no event may a PIECP inmate worker's total deductions exceed 80 percent of gross wages and each and every PIECP inmate worker must agree, in advance, to all deductions from gross wages.

Department of Corrections refers to state or local governmental entity or a political subdivision or instrumentality thereof, including not-for-profit entities, that are legally sanctioned by state legislatures to administer prison industries.

Designation is an exercise of a Certificate Holder's discretionary authority to bring a CAC within its certified PIECP Project. This exercise of authority results in an extension of PIECP exception status and an imposition of compliance requirements on an identified CAC operating within the certified PIECP Project.

Employer Model is a form of a PIECP management structure. In this model, the private sector owns and operates the CAC by controlling the hiring, firing, training, supervision, and payment of the inmate work force. The department of corrections assumes no major role in industry operations, does not direct production, and exercises minimum control over inmate labor performance. These functions are performed, rather, by the private sector.

Goods include tangible items, wares, and merchandise.

Locality means the geographic area impacted by the presence of a PIECP CAC operation. For PIECP CACs, it is relevant with regard to: determining inmate wages, providing consultation to appropriate labor and private sector organizations, and determining whether a PIECP CAC operation will displace the private sector labor force. All locality determinations must be documented as part of a Notice of Designation. As used in the calculation of CAC wage rates, *locality* is usually a matter for definition by the appropriate state agency which normally determines wage rates (*i.e.*, the State Department of Economic Security).

Minimum wage refers to the Federal minimum wage which is the lowest possible wage that can be paid to private sector employees under the Fair Labor Standards Act, 29 U.S.C. 206. Any special wage program, excepted by law from the minimum wage requirement in the private sector, may be used by a PIECP CAC as long as the CAC meets the same program participation conditions as private sector participants. The requisite payment of at least a minimum wage, by a CAC, is in no way intended by BJA to imply that PIECP inmate workers are employees for purposes of the PIECP statute or any other Federal law.

Monitoring refers to the process of examining Prison Work Pilot Project activities to ensure continuing compliance with 18 U.S.C. 1761(c) and this Guideline. It includes, at a minimum, BJA's receipt and analysis of performance reports and on-site CAC monitoring visits by BJA, BJA contractors and Certificate Holders.

NEPA means the National Environmental Policy Act, Pub. L. 91–190, 83 Stat. 852 (1970) (codified as amended at 42 U.S.C. 4321–4347; implemented under 40 C.F.R. pt. 1500).

Participation means engaging in the activities and operations of an 18 U.S.C. 1761(c) excepted PIECP Project.

PIECP means the Prison Industry Enhancement Certification Program as authorized by 18 U.S.C. 1761(c).

PIECP Exception Status. Any PIECP Project which produces prisoner-made goods pursuant to 18 U.S.C. 1761(c) is excepted from certain Federal restraints imposed on the marketability of prisoner-made goods, including 18 U.S.C. 1761(a) and 41 U.S.C. 35.

PIECP Inmate Worker is a convict or prisoner who performs notable tasks necessary to produce or transport goods in interstate commerce and for a Prison Work Pilot Project certified under 18 U.S.C. 1761(c). The PIECP Inmate Worker benefits from PIECP by receiving training and work experience.

Prevailing wage is a wage rate which is not less than that paid for work of a similar nature in the locality in which the work is to be performed, 18 U.S.C. 1761(c)(2).

Prison Industry means an organized utilization of inmate labor to produce goods or render services.

Prison Work Pilot Project (PIECP Project) refers to one of 50 non-Federal prison work pilot projects which may be designated by the Director of BJA under 18 U.S.C. 1761(c). This term encompasses the operations of the Certificate Holder's designated Cost Accounting Centers (CACs). Any Prison Work Pilot Project may consist of one or more CACs.

Prisoner includes prison and jail inmates, convicts and incarcerated juvenile offenders, and does not include prisoners on parole, probation, or supervised release. Title 18 U.S.C. 1761(a) does not regulate the transport of goods produced by prisoners on parole, supervised release, or probation.

Prisoner-made goods include all goods, wares, and merchandise manufactured, produced, or mined, wholly or in part, by convicts or prisoners (except convicts or prisoners on parole or probation).

Production is the forming anew or transforming of marketable goods. The term includes mining and manufacture and excludes services.

Provisional Certification is issued by BJA in instances where an applicant has not yet come into full compliance with all PIECP requirements, but such compliance appears imminent. It entitles the holder to PIECP exception status for an identified period of time, may be made contingent upon the occurrence of identified conditions, and may or may not be renewed by BJA.

Statutory Exception Status refers to a prison industry which meets the statutory requirements set forth in 18 U.S.C. 1761(b), and is thereby entitled to an exception from the prohibition set forth in 18 U.S.C. 1761(a).

Supervised Release. 18 U.S.C. 1761(a) states that the Ashurst-Sumners Act prohibition does not apply to ''convicts on parole, supervised release, or probation.'' The reference to ''supervised release'' was added to 1761(a) in 1984, Pub. L. 98–473, 223, and is responsive to changes made at that same time in state and Federal Sentencing Guidelines. Policy statements issued by the U.S. Sentencing Commission explain that supervised release is a ''new form of post-imprisonment supervision created by the Sentencing Reform Act.'' *See* Federal Sentencing Guidelines, 18 U.S.C.A. ch. 7, pt. A (1997).

Umbrella Authority refers to a type of Certificate Holder which is authorized by law to administer a PIECP Project and which consists of state and/or local departments of correction located

within the same state. A certified umbrella authority may designate CACs within its membership agencies, as well as within members' private prisons, and assumes responsibility for monitoring CAC compliance.

c. BJA's Initial Considerations for Determining Propriety of Work Pilot Project Certification

1. BJA's Exercise of Discretionary Authority To Define and Certify 50 Work Pilot Projects

(A) BJA may exercise discretionary authority to designate up to 50 non-Federal work pilot projects, 18 U.S.C. 1761(c).

(B) BJA may define PIECP eligibility qualifications and, in accordance with its own definitions, may exercise agency discretion to extend or withdraw certification privileges, as it deems appropriate.

2. Threshold Inquiry for Determining Applicability of PIECP Exception Status

Appropriate PIECP participants include prison industries whose activities would likely violate the 18 U.S.C. 1761(a) prohibition and would likely not fit within an 18 U.S.C. 1761(b) exception. BJA has devised an administrative approach for identifying such industries. This approach incorporates relevant sections 1761 (a) and (b) considerations, including whether a given prisoner-made item qualifies as an excepted agricultural product, whether a given prison industry activity qualifies as an unregulated service, and whether a product distribution activity qualifies as an intrastate distribution of goods. These considerations are reflected in the following threshold inquiry, which BJA will use to determine whether a prison industry should be encouraged to apply for PIECP exception status:

(A) Is a statutory exception applicable under 18 U.S.C. 1761(b)? The following prisoner-made items are excepted from the prohibition set forth in section 1761(a):

- Parts for the repair of farm machinery; or
- Commodities manufactured in a Federal, District of Columbia, or state institution for use by the Federal Government, or by the District of Columbia or by any state or political subdivision of a state or not-for-profit organizations. This exception is intended to inure to the benefit of the public; or
- Agricultural commodities grown or cultivated on a farm which retain continuing substantial identity through processing stages, if any. In making the determination as to whether a processing stage changes a product from an agricultural commodity to a manufactured commodity, a relevant consideration is whether the processing is incidental or ancillary to agricultural commodity growth and or cultivation. If the processing is incidental or ancillary in nature and is commonly undertaken by agricultural enterprises, then it would likely fall within the scope of the statutory exception.

(B) Could the contemplated activity trigger 18 U.S.C. 1761(a) by resulting in a production of goods by inmates in any penal or reformatory institution? The production of goods, which is regulated by 18 U.S.C. 1761(a), must be distinguished from inmate services which are not regulated by the criminal prohibition. The following factors are relevant in determining whether a given activity results in the production of prison-made goods:

- Has a tangible item been produced, manufactured or mined?
- Has a tangible item been formed or transformed?
- Has the activity resulted in the creation of property or in a new, marketable item?

(C) Could the contemplated activity trigger 18 U.S.C. 1761(a) by resulting in a post-production, interstate transportation of prisoner-made goods?

- Will there be transportation of prisoner-made goods into the flow of interstate commerce, *i.e.*, across state lines or from a foreign country into the United States?
- Is there a commercial economic enterprise present?

BJA will use this preliminary threshold inquiry to instill greater consistency in PIECP eligibility decision-making. If a prison industry activity falls within the scope of the § 1761(b) statutory exception, the involved industry need not seek § 1761(c) exception status to avoid § 1761(a) criminal sanctions. Additionally, if a prison industry activity would not result in the production of goods, interstate transport of prisoner-made goods, or does not in any other way trigger § 1761(a), the involved industry need not seek compliance with the requirements set forth in § 1761(c) or this Guideline.

This threshold inquiry was devised only for 18 U.S.C. 1761(c) programmatic purposes and does not reflect the Department of Justice's 18 U.S.C. 1761(a) prosecution guidelines. Thus, reliance on this Guideline, or any BJA determination based thereon, is not a complete defense to any civil or criminal action, but would depend on other factors as well.

d. Mandatory Program Criteria for PIECP Participation

1. Eligibility

All departments of correction and juvenile justice agencies authorized by law to administer prison industry programs are eligible to apply for PIECP certification; such governmental agencies are also eligible members of umbrella authorities, authorized by law to administer prison industry programs, that are seeking certification. PIECP Certificate Holders may designate CACs within themselves, as well as within private prisons located in the same state. A private prison industry may participate in PIECP only as designated CAC of the certified PIECP Project in its respective state and upon the approval of the Chief State Correctional Officer of that same state. CACs designated within private prisons must also retain on-file documentation reflecting approval of PIECP inmate worker participation by the state and local jurisdictions in which the PIECP inmate workers were convicted. In order to issue such approvals, the remanding state and local jurisdictions must also hold PIECP certificates. Non-compliance by any one designated CAC may result in PIECP exception status suspension and/or termination as to that CAC, and if warranted, its respective Certificate Holder. Also, within a reasonable period of time after certification, each Certificate Holder must have at least one CAC producing goods and operating under its authority or risk losing certification.

2. Inmate Wages

PIECP inmate workers must receive wages at a rate which is not less than that paid for work of a similar nature in the locality in which the work is to be performed. This requirement benefits society by allowing for the development of prison industries while protecting the private sector labor force and business from unfair competition that could otherwise stem from the flow of low-cost, prisoner-made goods into the marketplace. PIECP participants must, therefore, implement the prevailing wage requirements under like conditions experienced by private sector competition. Toward this end, the following requirements are applicable:

(A) Section 1761(c) requires that the PIECP wage amount be set exclusively in relation to the amount of pay received by similarly

situated non-inmate workers. In deriving the appropriate PIECP wage, 18 U.S.C. 1761(c)(2) does not allow other cost variables to be taken into consideration, such as unique expenses incurred as a result of undertaking production within the prison environment.

(B) Prevailing wage verification must be obtained by the appropriate state agency which determines wage rates (usually the Department of Economic Security).

(C) When making PIECP prevailing wage verifications and annual re-verifications, the responsible state agency should recommend the utilization of a non-inmate wage scale which will not result in the displacement of non-inmate workers performing similar work in the relevant locality.

(D) The PIECP prevailing wage must be received by those inmate workers performing notable tasks necessary to produce and/or transport goods in interstate commerce. If a similarly situated, private sector company is paying wages to obtain services that are necessary to production, *e.g.* refuse pickup, then the PIECP CAC must also pay such wages to the inmate provider of like services. In determining which tasks are covered, the following considerations are relevant: the amount of inmate time involved, effort and skill necessary to accomplish the task, the regularity of task performance, and whether the task would have been performed by the inmate absent PIECP production.

(E) The prevailing wage must be verified prior to the initiation of PIECP participation. Annually, thereafter, the PIECP participant must re-verify the adopted wage to ensure that it continues to be comparable to wages paid for work of a similar nature in the locality in which the project is located.

(F) If no such verification can be obtained from the State Department of Economic Security, or other similar department, the PIECP participant is responsible for establishing a reasonable prevailing wage. In such instances, the participant should retain on file, for BJA's review:

(1) relevant wage data from a sufficient number of competitors in the locality;

(2) data analyses for determining a reasonable prevailing wage result; and

(3) if possible, a written assessment of the reasonableness of the resulting prevailing wage determination by an appropriate state agency which normally determines wage rates.

(G) The PIECP prevailing wage can not be set below the Federal minimum wage, as defined in the Fair Labor Standards Act (FLSA), 29 U.S.C. 201 *et seq.* Payment of the Federal minimum wage, however, does not automatically achieve compliance with the prevailing wage requirement unless the prevailing wage for the comparable private sector industries is, in fact, the Federal minimum wage.

(H) Overtime, at one and a half times the rate of regular or prevailing wage, must be paid for prisoner hours worked in excess of 40 hours per week. *See* 29 U.S.C. 207(a) (a payment standard imposed on private sector competition).

(I) If a CAC pays a wage based on piece work, the project must apply a calculation to convert regular wages paid into a comparable hourly wage. The calculation should be used as a routine check to ensure that inmate workers, paid according to piece rate work, do not receive less than the Federal minimum wage. In instances where the CAC is paying Federal minimum wage and such a wage is less than the industry standard for the prevailing wage, the CAC must be able to identify inmate worker performance variances as justification for the wage rate.

(J) BJA strongly encourages the use of wage plans that take into consideration a PIECP worker's experience, seniority, and performance.

3. Non-Inmate Worker Displacement.

PIECP CAC operations must not result in displacement of employed workers; be applied in skills, crafts, or trades in which there is a surplus of available gainful labor in the locality; or significantly impair existing contracts. The term ''displacement,'' as used in this provision, includes all such prohibited activities, as well as the inappropriate transfer of private sector job functions to PIECP inmates. This prohibition is intended to protect the private sector partner's non-inmate employees, as well as all other non-inmate workers who perform work of a similar nature in the same locality in which the CAC is located. This prohibition is not, however, intended to prohibit PIECP CACs from engaging in typical business operations, such as competing for business or bidding on contracts on the open market after their designation as Cost Accounting Centers.

(A) Regarding the possibility of displacement among non-inmate employees of private sector partners in the same locality as the CAC:

(1) BJA will presume non-compliance where there is a non-inmate worker's job function replacement by a PIECP inmate worker or where a non-inmate worker's job function is eliminated or adversely impacted, to a significant degree, and there is a concomitant assumption of a similar job function by a PIECP inmate worker. This presumption may be overcome if it can be demonstrated that the non-inmate workers have been retained by the private sector partner in jobs at pay rates equal to or greater than that received in previous positions, that non-inmate employees have been provided an adequate opportunity for effective training in any new job skills and that the subject non-inmate employees are being retained by the private sector partner under reasonably similar or improved employment conditions. When making this compliance evaluation, BJA will not consider the private sector partner's intent or economic viability.

(2) Prior to CAC initiation, the CAC applicant must provide BJA with written documentation reflecting the private sector partner's agreement not to displace its non-inmate employees with PIECP inmate labor in violation of the 18 U.S.C. 1761(c) statutory note.

(B) Prior to project initiation, all CAC applicants must show through written verification by the State Department of Economic Security (or other appropriate state agency) that the PIECP project will not result in displacement of non-inmate workers performing the same work, regardless of wage rate. In cases where an appropriate state agency cannot provide this service, the applicant CAC should propose to and confer with BJA as to alternative measures to address this requirement.

(C) While compliance is a continuing CAC obligation, BJA will scrutinize CAC compliance with the non-displacement requirement just prior to and within one year after the initiation date of CAC operations.

(D) In instances where BJA finds that CAC implementation results in private sector worker displacement, the CAC must either cease its operations or comply with a BJA-approved corrective action plan, if BJA proposes such a plan under Section IV. f. of this Guideline, *infra*.

(E) BJA strongly recommends that CAC job development be oriented toward the creation of new jobs within the locality.

4. Benefits.

PIECP projects must provide inmate workers appropriate benefits comparable to those made available by the Federal or State Government to private sector employees, including workers' compensation and, under certain circumstances, Social Security.

(A) By statute, in some states, inmates are not eligible to participate in workers' compensation programs. Provision of comparable workers' compensation benefits is acceptable as long as the CAC can demonstrate comparability of such benefits with those secured by the Federal or state Government for private sector employees.

(B) The PIECP CAC management model impacts whether the CAC must provide Social Security benefits to PIECP inmate workers. Where the employer model is utilized and the private sector directs and controls the PIECP inmate worker, the PIECP participant must provide PIECP inmate workers with Social Security benefits. Where a customer model is utilized and a governmental, or instrumentality thereof, directs or controls the PIECP inmate worker, BJA recognizes the applicability of other provisions of Federal law which may operate to preclude the provision of PIECP inmates with certain benefits, including Social Security.

5. Deductions.

Participating CACs are not required under 18 U.S.C. 1761(c) to take deductions from PIECP inmate wages. Deductions, however, may be required under other Federal statutes, such as the Internal Revenue Code. If a CAC elects to take deductions from a PIECP inmates' gross wages, such deductions can be taken only under the following conditions:

(A) Deductions from gross wages, if made, may be withheld only for the following authorized purposes:

(1) taxes (Federal, state, local);

(2) in the case of a state prisoner, reasonable charges for room and board as determined by regulations issued by the Chief State Correctional Officer;

(3) allocations for support of family pursuant to state statute, court order, or agreement by the offender; and

(4) contributions of not more than 20 percent, but not less than 5 percent of gross wages to any fund established by law to compensate the victims of crime.

Such deductions, in aggregate, cannot exceed 80 percent of gross wages.

(B) PIECP inmate workers must be paid, credited with, or otherwise benefit legally from, the 20 percent gross remainder. In this regard, the CAC may direct the 20 percent gross remainder to a PIECP inmate worker's expense accounts, savings accounts, or toward the settling of the worker's legal obligations, including the payment of fines and restitution.

(C) Each Certificate Holder, through its respective Chief State Correctional Officer, retains flexibility in determining appropriate room and board charges that may be deducted from PIECP inmate workers' gross wages. Except as to CACs within private prisons, the applicable regulations for determining this deduction are those issued by the Chief State Correctional Officer of the state in which the PIECP inmate is incarcerated.

(D) The legislative history of 18 U.S.C. 1761(c) reflects a Congressional intent to permit the use of the room and board deduction to lower costs otherwise incurred by the public for inmate incarceration. Thus, prior to making room and board deductions, private prison CACs must obtain written approval of any such proposed deductions from the Chief State Correctional Officers for those states from which the PIECP inmate workers were remanded.

(E) A PIECP inmate's gross wages may be subjected to a deduction for the purpose compensating crime victims if the deducted amount is deposited into a fund established by law for the purpose of providing crime victim compensation. State crime victim compensation funds typically qualify as authorized recipients of such deducted amounts.

The victims compensation deduction may also be used to address victim restitution as long as the deducted amounts are deposited into a fund established by law to address such victim interests. Amounts deducted by private prison CACs should be deposited in those crime victim compensation or restitution funds in states from which the PIECP inmates were remanded.

6. Voluntary PIECP Inmate Worker Participation

The Inmate Worker must indicate, in writing, that he or she:

(A) agrees voluntarily to participate in the PIECP project, and

(B) agrees voluntarily, and in advance, to specific deductions made from gross wages, as well as all other financial arrangements made as to earned PIECP wages.

7. Consultation With Organized Labor

PIECP CACs must:

(A) consult with representatives of local union central bodies or similar labor union organizations prior to the initiation of any certified or designated CAC project. CACs should consult with as many of such organizations as may have an interest in the trade or skill to be performed by the PIECP inmates. If there are no local union bodies or labor organizations, consultation must be made with the state union bodies or similar state-wide labor organizations.

(B) provide adequate information about the contemplated PIECP participation such as, at a minimum, an identification of the scope of the intended CAC and projected initiation date, as well as an explanation of the fact that statutory consultation is required and comments are invited. CACs should retain documentation reflecting provision of adequate consultation.

8. Consultation With Local Private Industry

PIECP CACs must:

(A) consult with representatives of local business that may be economically impacted by CAC production prior to beginning operations, and

(B) provide adequate information about the contemplated PIECP participation such as, at a minimum, an identification of the scope of the intended CAC and projected initiation date as well as an explanation of the fact that consultation is required and comments are invited. CACs should retain documentation reflecting provision of adequate consultation.

9. Compliance With the National Environmental Policy Act (NEPA)

The review and approval of PIECP certification applications as well as the designation of PIECP CACs must comply with NEPA and other related Federal environmental review requirements. *See* NEPA, 42 U.S.C.

4321–4347 and 40 CFR pt. 1500. *See also* 28 CFR pt. 61 (Department of Justice procedures for implementing NEPA); 28 CFR pt. 61 App. D (procedures specific to Federal actions undertaken by the Office of Justice Programs).

(A) A BJA PIECP certification, or a CAC designation under an issued certification, constitutes a ''Federal action,'' as defined by 40 CFR 1508.18 of the Council on Environmental Quality's (CEQ) regulations for implementing NEPA. Consistent with CEQ regulations, PIECP applicants and CACs are required to submit for BJA review environmental data and information regarding their proposed activities and, if necessary, environmental assessments. Applicants and CACs must also assist BJA in the preparation of any required environmental impact statements.

(B) Title 28 CFR Part 61 App. D provides NEPA compliance guidance to PIECP applicants and CACs, including the following:

(1) Actions entailing minor renovation projects or remodeling do not normally require an environment impact statement or an environmental assessment, unless, for example the actions would be located in or potentially affect a floodplain; a wetland; a listed species or critical habitat for an endangered species; or a property that is listed on or may be eligible for listing on the National Register of Historic Places.

(2) Actions that normally require an environmental assessment, but not necessarily an environmental impact statement, include: renovations and expansions that change the basic prior use of a facility or substantially change its size; change in use of an existing facility that results in the increased production of liquid, gaseous, or solid wastes; new construction; research and technology whose anticipated and future application could be expected to have an effect on the environment; and new operations involving the use of hazardous, toxic, radioactive, or odorous materials. Assessments of such activities which result in BJA ''findings of significant impact'' will necessitate the preparation of environmental impact statements in compliance with NEPA and its implementing regulations.

(3) Additionally, no certification will be approved nor can any designation be provided or maintained if the application or designation includes a facility in non-compliance with any Federal, state, or local environmental law or regulation.

IV. PIECP Administration

a. Certificate Holders

BJA may exercise its discretionary authority to certify up to 50 Non-Federal PIECP Projects. Eligible applicants may seek certification by submitting an application to BJA in accordance with the requirements set forth in BJA's PIECP Certification Application, which will be provided upon request, and subpart IV.a.2, *infra*. BJA's review of submitted applications will be conducted as outlined in subparts IV.a.3 and a.4, *infra*. Once a certificate is issued, the holder assumes the authority and responsibilities set forth in subparts IV.a.5 and a.6, *infra*.

1. Project Structure

All departments of correction, authorized by law to administer prison industry programs, are eligible to apply for BJA certification. Certified applicants may designate one or a number of Cost Accounting Centers (CACs) under their authority. Certificate Holders may also under certain conditions designate CACs within private prisons located in their respective states or jurisdictions. BJA will consider alternative program structures suggested by certification applicants, including, but not limited to, applicant umbrella authorities, as described in subpart III. d.1, *supra*.

2. Application Content

All applications for PIECP Project Certification shall include the following:

(A) *Assurances of Authority*. The Certificate Holder must provide written assurance to BJA that it has in place appropriate statutory and administrative authority to meet all mandatory program criteria and, in particular, to monitor CAC compliance throughout the proposed PIECP Project.

(B) *Documentation to Show Compliance With Mandatory Program Criteria*. The applicant must submit all documentation necessary to show CAC compliance with the nine mandatory program criteria outlined in Section III. d., *supra*.

(C) *Project Description*. The applicant must describe key project elements, including the process to be used to designate and monitor compliance of CACs with 18 U.S.C. 1761(c) and this Guideline.

3. BJA Review

PIECP applications will be reviewed by BJA on a first-come, first-served basis. Awards of certification are discretionary exercises of authority by BJA under 18 U.S.C. 1761(c). No certification will be awarded, however, unless there is a determination that the applicant has met the mandatory participation criteria outlined in this Guideline. Applicants will be notified in writing of BJA's award or denial of certification. The hearing and appeal procedures set forth in 28 C.F.R. Part 18 do not apply to denied PIECP applicants. Certified applicants will be informed of the effective date of BJA's certification.

4. Standard or Provisional Certification

A standard certification may be issued by BJA to an approved Certificate Holder applicant when all mandatory program criteria have been met. When one or more mandatory program criteria have not been met, but when steps have been taken to ensure that those criteria will be met within a reasonable period of time, then a provisional certification may be issued by BJA in instances where the withholding of certification would significantly impair the applicant's ability to further develop its project. The terms of the provisional certification will be made specific to the nature of the unmet mandatory criteria and may be made contingent upon the occurrence of identified conditions. Provisional certifications may be issued for no longer than one year from the date of issuance and may be subject to renewal, at BJA's discretion.

5. Certificate Holder Designation Authority

(A) The Certificate Holder may exercise CAC designation authority with respect to department of correction prison industries operating under its jurisdiction, including in private prisons which are located in its respective state or jurisdiction. CACs designated within private prisons must also retain on-file documentation reflecting approval of PIECP inmate worker participation by the state and local jurisdictions in which PIECP inmate workers were convicted. In order to issue such approvals, the remanding state and local jurisdictions must also hold PIECP certificates.

To exercise this authority, a Certificate Holder must first determine that a proposed CAC has complied with the requirements set forth in this Guideline and in 18 U.S.C. 1761(c).

Whenever the Certificate Holder elects to exercise this authority after certification application approval, it must submit a Notice of Designation Form to BJA that provides the following information and documentation:

(1) Cost Accounting Center Name and Location;
(2) Proposed number of workers;
(3) Item(s) to be produced;
(4) Proposed consumer market (including anticipated geographic distribution);
(5) Description of private sector involvement, including models that will be used in working with private enterprise;
(6) Locality determination, and supporting justification;
(7) Description of inmate compensation plans;
(8) Documentation of prevailing wage verification;
(9) Identification of deductions and percentage of each to be taken from PIECP inmates' gross wages;
(10) Documentation of private sector partner's agreement not to displace its non-inmate employees in the same locality with PIECP inmate labor, if applicable;
(11) Documentation of non-displacement verification; and
(12) As to any CACs within private prisons, written approval from remanding jurisdiction of any proposed room and board deduction, in compliance with Section III.d.5.(E)of this Guideline, *supra*;
(13) As to any CACs within private prisons, written approval of the designation by the Chief State Correctional Officer for the jurisdiction in which the CAC is located; and
(14) Documentation of the environmental impacts of the CAC's existing and proposed activities.

(B) The Certificate Holder may, in its own discretion, undesignate any previously designated CAC. In such instances, the Certificate Holder must submit to BJA an Undesignation Form providing the following information:

(1) Cost Accounting Center Name and Location;
(2) Reasons for Undesignation; and
(3) Effective Date of Undesignation.

(C) BJA may, at any time deemed necessary to resolve compliance concerns and upon the issuance of written notice, suspend a Certificate Holder's authority to designate additional Cost Accounting Centers.

6. Certificate Holder Monitoring Responsibilities

As to all designated CACs, the Certificate Holder must assume the following monitoring responsibilities:

(A) Undertake all reporting and evaluation activities deemed necessary to ensure continuing designated CAC compliance; and
(B) Respond to all BJA requests for information and cooperation aimed at ensuring Project compliance.

b. Cost Accounting Centers' PIECP Exception Status

A CAC is entitled to operate under PIECP exception status.

1. To retain this status, the CAC must comply with all PIECP participation obligations to its Certificate Holder and to BJA, including:

(A) Maintaining continuous compliance with the requirements set forth in 18 U.S.C. 1761(c) and in III.d), *supra*, of this Guideline; and
(B) Responding to all monitoring requests for information and cooperation aimed at maintaining continued compliance with this Guideline.

2. The CAC must promptly report to the Certificate Holder any contemplated change in operations which may affect its ability to maintain statutory and Guideline compliance.

c. Compliance Reviews

1. Performance Reports

Within 30 days following the close of each calendar quarter, each CAC must submit a quarterly performance report to its Certificate Holder in a form prescribed by BJA. The performance report describes activities undertaken during the prescribed period. A consolidated report of all CAC activity must be submitted to BJA by the Certificate Holder within 45 days following the close of each calendar quarter.

2. On-Site Monitoring Reviews

BJA and BJA technical assistance contractors are authorized to perform desk and on-site reviews of all PIECP participants, including all CACs, as deemed necessary. On-site reviewers may request access to any and all documentation necessary to assist in determining compliance with the requirements of this Guideline and 18 U.S.C. 1761. Monitored participants will be advised in writing of the results of any such reviews. Immediate corrective action must be taken to address determinations of non-compliance and/or to respond to issues that raise compliance related-concerns for BJA.

d. BJA's PIECP Administration

BJA's PIECP responsibilities include the following:

1. Review and approval of Certificate Holder PIECP applications;
2. Monitoring to determine compliance status of operations within all CACs;
3. PIECP exception status termination or suspension for cause related to substantial non-compliance;
4. Liaison with other Federal agencies that may affect PIECP operations;
5. Provision of compliance-related technical assistance; and
6. Any and all other functions necessary to administer the program in compliance with 18 U.S.C. 1761(c).

e. PIECP Exception Status Suspension/Termination

1. Notice of Possible Compliance Violation

Alleged facts indicative of non-compliance shall be communicated in writing by BJA to the involved Certificate Holder and the involved designated CAC. These parties must respond to the allegations, in writing, within 15 days after receipt of the notice of non-compliance determination. Immediate corrective action must be taken to address determinations of non-compliance.

2. Voluntary Compliance Agreements

If BJA determines that noncompliant practices persist, BJA may, in its discretion, propose a voluntary compliance agreement to the involved Certificate Holder.

3. Failure To Achieve Compliance and Effect of Non-Compliance

If a voluntary compliance agreement is not presented by BJA or is not accepted or adequately implemented by the Certificate Holder within 30 days after receipt of such an agreement, BJA may suspend the Certificate Holder's certification and/or CAC exception status.

4. PIECP Exception Status Suspension and Termination

A certification may be terminated by BJA if it has been inactive (no production within a designated CAC) or suspended for six consecutive months. A certification and/or designation may be suspended, and six months thereafter, terminated upon: (1) issuance of a notice of a determination that the Certificate Holder and/or designated CAC is not acting in compliance with

the requirements of 18 U.S.C. 1761, this Guideline or the conditions set forth in its certificate; or (2) in the discretion of the Director of BJA and upon a re-definition of a PIECP Project authorized under 18 U.S.C. 1761(c). Termination or suspension of the exception status of one designated CAC will not automatically impact the PIECP exception status of other CACs under the same certification unless the PIECP Project certification is suspended or terminated. The hearing and appeal procedures set forth in 28 C.F.R. Part 18 do not apply to PIECP applicants or participants who have had PIECP exception status suspended or terminated under this provision.

Dated: March 31, 1999.

Nancy Gist,

Director, Bureau of Justice Assistance.

[FR Doc. 99–8575 Filed 4–6–99; 8:45 am]

BILLING CODE 4410–18–P

DEPARTMENT OF JUSTICE

National Institute of Corrections

Solicitation for a Cooperative Agreement

SUMMARY: The Department of Justice (DOJ), National Institute of Corrections (NIC) announces the availability of funds in FY '99 for a cooperative agreement to fund a multi-year project entitled Gender-Specific Responses: Research Practice and Guiding Principles.

Purpose: The National Institute of Corrections is seeking proposals for a cooperative agreement to provide planning assistance in designing a multi-year project on gender responsive strategies for women offenders. The assistance will be provided to the National Institute of Corrections' (NIC) Women Offenders' Initiative, a five person, Institute-wide team comprised of representatives from each of the four program divisions. The multi-year project is entitled Gender-Specific Responses: Research, Practice and Guiding Principles, and is described on page 47 of the NIC Service Plan for Fiscal Year 1999.

Authority: Pub. L. 93–415.

Funds Available: The maximum amount available is $20,000 for one cooperative agreement for the planning/design phase of the project. The planning assistance must be completed within a three month period.

Deadline for Receipt of Applications: Applications must be postmarked by 4:00 p.m., Eastern daylight time on Friday, April 30, 1999.

Addresses and Further Information: Requests for the application kit, which includes details on the project's objectives, etc., should be directed to Judy Evens, Grants Control Office, National Institute of Corrections, 320 First St, NW, Room 5007, Washington, DC 20534 or by calling 800–995–6423, ext. 159 or 202–307–3106, ext. 159. You may also obtain a copy of the kit by e-mailing Ms. Evens at *jevens@bop.gov*.

All technical and/or programmatic information on this announcement should be directed to Ms. Phyllis Modley at the above address or by calling 800–995–6423, ext. 133 or 202–307–3106, ext, or by e-mail at: *pmodley@bop.gov*.

Eligible Applicants: An eligible applicant may be: a private organization, non-profit organization, individual or institution.

Review Consideration: Applications received under this announcement will be subjected to an NIC 3 to 5 member Peer Review Process.

Number of Awards: One (1).

NIC Application Number: 99D02.

Other Information: The person or organization which is the successful applicant for this planning phase may not apply for the subsequent, multi-year development project.

Executive Order 12372:

This program is subject to the provisions of Executive Order 12372. Executive Order 12372 allows States the option of setting up a system for reviewing applications from within their States for assistance under certain Federal programs. Applicants (other than Federally-recognized Indian tribal governments) should contact their State Single Point of Contact (SPOC), a list of which is included in the application kit, along with further instructions on proposed projects serving more than on State.

The Catalog of Federal Domestic Assistance number is: 16.603

Dated: April 1, 1999.

Morris L. Thigpen,

Director, National Institute of Corrections.

[FR Doc. 99–8529 Filed 4–6–99; 8:45 am]

BILLING CODE 4410–36–M

DEPARTMENT OF JUSTICE

Federal Bureau of Prisons

National Institute of Corrections; Agency Information Collection Activities: Reinstatement, Without Change, of a Previously Approved Collection for Which Approval Has Expired

ACTION: Notice of information collection under review; Data base of offender job training and placement service providers.

The Department of Justice, Federal Bureau of Prisons, National Institute of Corrections has submitted the following information collection request for review and clearance in accordance with the Paperwork Reduction Act of 1995. The proposed information collection is published to obtain comments from the public and affected agencies. Comments are encouraged and will be accepted until June 7, 1999.

Written comments and suggestions from the public and affected agencies concerning the proposed collection of information should address one or more of the following four points:

(1) Evaluate whether the proposed collection of information is necessary for the proper performance of the functions of the agency/component, including whether the information will have practical utility;

(2) Evaluate the accuracy of the agencies/components estimate of the burden of the proposed collection of information, including the validity of the methodology and assumptions used;

(3) Enhance the quality, utility, and clarity of the information to be collected; and

(4) Minimize the burden of the collection of information on those who are to respond, including through the use of appropriate automated, electronic, mechanical, or other technological collection techniques or other forms of information technology, e.g. permitting electronic submission of responses.

If you have additional comments, suggestions, or need a copy of the proposed information collection instrument with instructions, or additional information, please contact John E. Moore, 202–307–1300 Ext. 147, National Institute of Corrections, Office of Correctional Job Training and Placement, 320 First Street, N.W., Washington, D.C. 20534.

Overview of This Information Collection

(1) *Type of information collection:* Reinstatement, without change, of a

previously approved collection for which approval has expired.

(2) *The title of the form/collection:* Data base of Offender Job Training and Placement Service Providers.

(3) *The agency form number, if any, and the applicable component of the department sponsoring the collection:* Department of Justice, Bureau of Prisons, National Institute of Corrections, Office of Correctional Job Training and Placement.

(4) *Affected public who will be asked or required to respond, as well as a brief abstract:* Agencies and organizations involved in providing job counseling, training in job readiness skills, job development, and job placement services for offenders and/or ex-offenders to include public corrections, i.e. State and local Prison Systems; Jails; Departments of Probation and Parole; and Private For Profit and Private Not for Profit Agencies and Organizations.

Other: None.

Information gathered from the survey will be placed in a data base to be used primarily as a mailing list of service providers. The database is being used by the Office of Correctional Job Training and Placement to build a network of professionals providing these services, and it will facilitate the sharing of timely information to include notices of available training opportunities, publications, and technical assistance.

(5) *An estimate of the total number of respondents and the amount of time estimated for an average respondent too respond/reply:* It is estimated that approximately 75 surveys per year will be forwarded to programs for return and inclusion into the data base. The time burden of the 75 surveys is 10 minutes per survey.

(6) *An estimate of the total public burden (in hours) associated with the collection:* The total burden hour to complete the applications is 12 hrs. and 45 minutes annually.

If additional information is required contact: Mr. Robert B. Briggs, Clearance Officer, United States Department of Justice, Information Management and Security Staff, Justice Management Division, Suite 850, Washington Center, 1001 G Street, NW, Washington, D.C. 20530.

Dated: April 1, 1999.

Robert B. Briggs,

Department Clearance Officer, United States Department of Justice.

[FR Doc. 99–8504 Filed 4–6–99; 8:45 am]

BILLING CODE 4410–05–M

DEPARTMENT OF LABOR

Office of the Secretary

Women's Bureau; The National Women Veterans Art Design Search; Reopening and Extension of Search Period

AGENCY: Office of the Secretary, Labor.

ACTION: Reopening and Extension of the National Women Veterans Art Design Search.

SUMMARY: This document reopens and extends the period for U.S. military veterans to submit their original art work depicting the theme: ''Hire a Vet: A Model of Success.'' This action is taken to permit additional U.S. military veterans to participate in the search.

DATES: Original art work must be received no later than September 7, 1999.

ADDRESSES: Send or deliver original art work and Artist Release Form (see Section A of this Notice) to Cheryl Edwards, U.S. Department of Labor, Women's Bureau, 200 Constitution Avenue, NW, Room S–3311, Washington, DC 20210.

FOR FURTHER INFORMATION CONTACT: Cornelia H. Moore, Regional Administrator, U.S. Department of Labor Women's Bureau, Philadelphia, PA 19104, 1–800–379–9042 or visit the Women's Bureau website at http://www.dol.gov/dol/wb

SUPPLEMENTARY INFORMATION: In the **Federal Register** of September 3, 1998 (63 FR 47094), the Department of Labor published an announcement of the national women veterans original art search in which any U.S. military veteran can compete for first, second and third places for the best original art works that depict women as U.S. military veterans with a ''Hire a Vet: A Model of Success'' theme. Interested persons were requested to send or deliver their original art work on or before October 16, 1998.

Because of the continuing interest in the original art design search, the Women's Bureau believes that it is desirable to reopen and extend the period for all interested persons. Therefore, the search is reopened and extended to September 7, 1999. A copy of the September 3, 1998 **Federal Register** can be obtained from the U.S. Department of Labor, Women's Bureau, by calling 1-800–379–9042.

The winners will be notified on or before October 8, 1999. The first place winning entrant will be unveiled by the Secretary of Labor during the Department's Salute to Veterans program in November 1999.

A. Artist Licensing, Certification, and Release Form

In order for an artist to be eligible to receive any award for this National Women Veterans Original Art Search, the artist must have signed the following Artist Licensing, Certification, and Release Form:

I, ____, do hereby confer exclusive rights upon the United States Department of Labor (USDOL) to display (including on the Internet), reproduce, distribute, and sell reproductions of my entry in any form until November 30, 2001. Thereafter, I authorize USDOL the right to display my entry, as well as sell and distribute reproductions of my entry made prior to November 30, 2001.

I certify that this entry is my own original work for which I own all rights, and no other person is or will be authorized to reproduce or sell it for the duration of this agreement. I also certify that there has been no prior publication of this work. I understand that my entry will be returned with the hanging strips and blocks, used for exhibition of my entry, still attached. I hereby release USDOL, including the Women's Bureau, the Veterans' Employment and Training Service, and the United States Employment Service, from any and all liability for damage or loss of my entry.

Signature of Artist

Print Name

Address (including zip code)

Telephone Number and Fax Number (Including area codes)

* * * * *

Signed at Washington, DC, this 1st day of April 1999.

Delores L. Crockett,

Deputy Director, Women's Bureau.

[FR Doc. 99–8592 Filed 4–6–99; 8:45 am]

BILLING CODE 4510–23–P

DEPARTMENT OF LABOR

Employment and Training Administration

[TA–W–35,522]

Great Northern Paper, Millinocket, Maine; Dismissal of Application for Reconsideration

Pursuant to 29 CFR 90.18(C) an application for administrative reconsideration was filed with the Acting Director of the Office of Trade Adjustment Assistance for workers at Great Northern Paper located in

Millinocket, Maine. The review indicated that the application contained no new substantial information which would bear importantly on the Department's determination. Therefore, dismissal of the application was issued.

TA–W–35,522; Great Northern Paper Millinocket, Maine (March 24, 1999)

Signed at Washington, DC this 31st day of March, 1999.

Grant D. Beale,

Acting Director, Office of Trade Adjustment Assistance.

[FR Doc. 99–8593 Filed 4–6–99; 8:45 am]

BILLING CODE 4510–30–M

DEPARTMENT OF LABOR

Employment and Training Administration

Investigations Regarding Certifications of Eligibility To Apply for Worker Adjustment Assistance

Petitions have been filed with the Secretary of Labor under Section 221(a) of the Trade Act of 1974 (''the Act'') and are identified in the Appendix to this notice. Upon receipt of these petitions, the Acting Director of the Office of Trade Adjustment Assistance, Employment and Training Administration, has instituted investigations pursuant to Section 221(a) of the Act.

The purpose of each of the investigations is to determine whether the workers are eligible to apply for adjustment assistance under Title II, Chapter 2, of the Act. The investigations will further relate, as appropriate, to the determination of the date on which total or partial separations began or threatened to begin and the subdivision of the firm involved.

The petitioners or any other persons showing a substantial interest in the subject matter of the investigations may request a public hearing, provided such request is filed in writing with the Acting Director, Office of Trade Adjustment Assistance, at the address shown below, not later than April 19, 1999.

Interested persons are invited to submit written comments regarding the subject matter of the investigations to the Acting Director, Office of Trade Adjustment Assistance, at the address shown below, not later than April 19, 1999.

The petitions filed in this case are available for inspection at the Office of the Acting Director, Office of Trade Adjustment Assistance, Employment and Training Administration, U.S. Department of Labor, 200 Constitution Avenue, N.W., Washington, D.C. 20210.

Signed at Washington, DC, this 15th day of March 1999.

Grant D. Beale,

Acting Director, Office of Trade Adjustment Assistance.

APPENDIX

[Petitions Instituted on 03/15/1999]

TA–W	Subject firm (petitioners)	Location	Date of petition	Product(s)
35,799	Louisiana Pacific (Wkrs)	Rogue River, OR	02/23/1999	Veneer.
35,800	WACO (Wkrs)	Waterbury, CT	02/24/1999	Sleepwear.
35,801	Continental Sprayers (Co.)	El Paso, TX	02/24/1999	Plastic Trigger Sprayers.
35,802	Fleming Potter Co, Inc (Wrkrs)	Peoria, IL	02/24/1999	Labels.
35,803	Outokumpu Copper Kenosha (USWA)	Kenosha, WI	02/24/1999	Light Gauge Brass, Copper Strip.
35,804	Veritas DGC Land (Co.)	Pearl, MS	02/23/1999	Gather Seismic Data for Oil Companies.
35,805	Operators and Consulting (Wrkrs)	Lafayette, LA	02/23/1999	Offshore Disatchers.
35,806	Phelps Dodge Chino Mining (Wrkrs)	Hurley, NM	02/26/1999	Copper Mining.
35,807	Kicks Fashions, Inc (Wrkrs)	New York, NY	02/23/1999	Ladies' & Girl's Knit Tops.
35,808	Paul Sebastian Inc (Wrkrs)	Ocean, NJ	02/24/1999	Men's and Ladies' Fragrances.
35,809	Globe Construction Co. (Wrkrs)	Hobbs, NM	02/02/1999	Oil Service.
35,810	4 Way Trucking (Wrkrs)	Hays, KS	02/25/1999	Trucking Services—Oilfield.
35,811	Rockwell Automation (IAMAW)	Madison, IN	02/25/1999	AC Fractional Motors.
35,812	Silicon Graphics, Inc (Wrkrs)	Eagan, MN	02/24/1999	Supercomputers.
35,813	Fentress Industries (Co.)	Jamestown, TN	02/26/1999	Ladies' Blazers.
35,814	Fairfield Southern RR (Wrkrs)	Fairfield, AL	02/22/1999	Transport Hot, Cold Rolled Steel.
35,815	Controlled Recovery, Inc (Wrkrs)	Hobbs, NM	02/17/1999	Crude Oil.
35,816	Chapman Services (Co.)	Odessa, TX	02/26/1999	Rental Oil Equipment.
35,817	Rawlings Sporting Goods (Wrkrs)	Ava, MO	02/17/1999	Footballs.
35,818	Gesell's Pump Sales ((Wrkrs)	Whittington, IL	02/23/1999	Oilfield Services.
35,819	Gandy Drill Pipe, LTD (Wrkrs)	Midland, TX	02/23/1999	Steel Pipe.
35,820	Stone Savannah River Pulp (UPIP)	Savannah, GA	02/23/1999	Bleach Market Pulp.
35,821	PMC Global Industries (Wrkrs)	Odessa, TX	02/22/1999	Gas Measurement Instruments.
35,822	Fashions Enterprises (Co.)	El Paso, TX	02/22/1999	Ladies' Suits, Skirts, Pants.
35,823	Land Management Group (Wrkrs)	Houston, TX	02/22/1999	Exploration Services.
35,824	Emerson Electric (Wrkrs)	El Paso, TX	02/21/1999	Electrical Switches.
35,825	Keystone Powdered Metal (Wrkrs)	St. Marys, PA	02/24/1999	Automotive Parts.
35,826	Harris Mud and Chemical (Wrkrs)	Olney, IL	02/23/1999	Oil, Gas Drilling.
35,827	Pennant Service Co (Co.)	Denver, CO	02/23/1999	Oil, Gas Well Services.
35,828	Brown Jordan (USWA)	Newport, AR	02/22/1999	Patio Furniture.
35,829	Lucia, Inc (Co.)	Elkin, NC	03/02/1999	Ladies's Apparel.
35,830	Hayes Microcomputers (Wrkrs)	Norcross, GA	02/19/1999	Microcomputer Modems.
35,831	La Brava LTD (Wrkrs)	Brooklyn, NY	02/23/1999	Ladies' Sportswear.
35,832	Red's Satellite Service (Co.)	Abilene, TX	02/24/1999	Oilwell Drilling and Services.
35,833	Vanity Fair Intimates (Co.)	Milton, FL	02/22/1999	Intimate Apparel.
35,834	Gambro Renal Care (Co.)	Newport News, VA	02/19/1999	Disposable Medical Devices.
35,835	Eaton Corporation (Co.)	Hamilton, IN	02/24/1999	Valves, Sensors, Actuation Devices.
35,836	Gloria Lingerie (UNITE)	Long Island, NY	02/24/1999	T–Shirts.
35,837	Datiani Fashions LTD (Wrkrs)	New York, NY	02/18/1999	Ladies' Dresses.

APPENDIX—Continued

[Petitions Instituted on 03/15/1999]

TA–W	Subject firm (petitioners)	Location	Date of petition	Product(s)
35,838	Equistar Chemicals L.P. (IAMAW)	Port Arthur, TX	02/14/1999	Polyethylene Plastic.
35,839	Topco, Inc (Co.)	Elizabeth, NJ	02/23/1999	Metal Stampings.
35,840	Ocean Energy (Co.)	Lafayette, LA	03/01/1999	Exploration, Development of Oil.
35,841	North American Knitting (Co.)	Mansfield, OH	03/03/1999	Knit Suits.
35,842	MKE Quantum Components (Co.)	Louisville, CO	02/25/1999	Head Gimbal Assembly.
35,843	Avery Dennison Office (Co.)	Rochelle, IL	02/19/1999	Index Dividers.
35,844	Seco Products Corp (Co.)	S. Plainfield, NJ	02/26/1999	Plastic Lids.
35,845	Pool California Energy (Co.)	Bakersfield, CA	02/04/1999	Oilfield Services.
35,846	US Axle, Inc (UAW)	Pottstown, PA	02/26/1999	Axles, Shafts.
35,847	Store Ready Co (Wrkrs)	Cressona, PA	02/23/1999	Hanging, Sagging & Preparing Garments.
35,848	Pool Company (Wrkrs)	Roosevelt, UT	03/05/1999	Oil Services.
35,849	Horace Small Manufacturing (Co.)	Nashville, TN	02/26/1999	Uniform Pants.
35,850	Cooper Cameron Valve (Wrkrs)	Missouri City, TX	02/25/1999	Internal Parts for Valves.
35,851	Advantage Lift Systems (Co.)	Williamson, PA	02/26/1999	Automotive Hoists.
35,852	Reading Anthracite (UMWA)	Pottsville, PA	02/22/1999	Coal Mining.
35,853	Titan Oil, Inc (Wrkrs)	Baker, MT	02/25/1999	Crude Oil.
35,854	Carolina Maid Products (Co.)	Granite Quarry, NC	03/03/1999	Ladies' Apparel.
35,855	Puget Plastics (Co.)	Tualatin, OR	03/02/1999	Computer Plastic Parts.
35,856	Suzette Fashions (UNITE)	Jersey City, NJ	03/01/1999	Ladies' Coats.
35,857	Johnstown Corporation (USWA)	Johnstown, PA	02/26/1999	Steel Castings.
35,858	Haggar Clothing (Co.)	Weslaco, TX	02/23/1999	Men's Pants and Coats.
35,859	Heckett Multiserv (Wkrs)	Slippery Rock, PA	02/20/1999	Repair Steel Mill Equipment.
35,860	Timken Latrobe Steel Co (USWA)	Latrobe, PA	03/01/1999	Specialy Steels.
35,861	Continental Emsco (Wkrs)	Hobbs, NM	02/23/1999	Downhole Pumps.
35,862	Flex O Lite (Wkrs)	Elwood, IN	03/01/1999	Safety Equipment.
35,863	Tultex (Co.)	Mayodan, NC	03/02/1999	Crewneck Fleece Sweatshirts.

[FR Doc. 99–8595 Filed 4–6–99; 8:45 am]

BILLING CODE 4510–30–M

DEPARTMENT OF LABOR

Employment and Training Administration

[TA–W–35, 610]

Ralston Purina Now Known as Ralston Purina, Gold Products Division, Olmsted, Illinois; Dismissal of Application for Reconsideration

Pursuant to 29 CFR 90.18(C) an application for administrative reconsideration was filed with the Acting Director of the Office of Trade Adjustment Assistance for workers at Ralston Purina, now known as Ralston Purina, Gold Products Division, Olmsted, Illinois. The application contained no new substantial information which would bear importantly on the Department's determination. Therefore, dismissal of the application was issued.

TA–W–35, 610; Ralston Purina, Now Known as Ralston Purina, Gold Products Division, Olmsted, Illinois (March 31, 1999)

Signed at Washington, D.C. this 1st day of April, 1999.

Grant D. Beale,

Acting Director, Office of Trade Adjustment Assistance.

[FR Doc. 99–8597 Filed 4–6–99; 8:45 am]

BILLING CODE 4510–30–M

DEPARTMENT OF LABOR

Employment and Training Administration

Investigations Regarding Certifications of Eligibility to Apply for Worker Adjustment Assistance

Petitions have been filed with the Secretary of Labor under Section 221(a) of the Trade Act of 1974 (''the Act'') and are identified in the Appendix to this notice. Upon receipt of these petitions, the Acting Director of the Office of Trade Adjustment Assistance, Employment and Training Administration, has instituted investigations pursuant to Section 221(a) of the Act.

The purpose of each of the investigations is to determine whether the workers are eligible to apply for adjustment assistance under Title II, Chapter 2, of the Act. The investigations will further relate, as appropriate, to the determination of the date on which total or partial separations began or threatened to begin and the subdivision of the firm involved.

The petitioners or any other persons showing a substantial interest in the subject matter of the investigations may request a public hearing, provided such request is filed in writing with the Acting Director, Office of Trade Adjustment Assistance, at the address shown below, not later than April 19, 1999.

Interested persons are invited to submit written comments regarding the subject matter of the investigations to the Acting Director, Office of Trade Adjustment Assistance, at the address shown below, not later than April 19, 1999.

The petitions filed in this case are available for inspection at the Office of the Acting Director, Office of Trade Adjustment Assistance, Employment and Training Administration, U.S. Department of Labor, 200 Constitution Avenue, N.W., Washington, D.C. 20210.

Signed at Washington, D.C., this 22nd day of March, 1999.

Grant D. Beale,

Acting Director, Office of Trade Adjustment Assistance.

APPENDIX

[Petitions Instituted on 03/22/1999]

TA–W	Subject firm (petitioners)	Location	Date of petition	Product(s)
35,864	Timken Co (The) (USWA)	Canton, OH	02/22/1999	Tapered Roller Bearings.
35,865	N F and M International (USWA)	Monaca, PA	03/11/1999	Titanium Bar.
35,866	Acutus Gladwin (Comp)	Blytheville, AR	03/12/1999	Maintenance for Casters & Molds.
35,867	Exide Electronics (Comp)	Leland, NC	02/25/1999	Power Systems.
35,868	3M, West Deptford Plant (Comp)	Thorofare, NJ	02/22/1999	Electrical Crimp Terminals.
35,869	CMS Oil and Gas Co (Comp)	Traverse City, MI	02/11/1999	Exploration, Production, Oil & Gas.
35,870	Kai Jay Jeanswear (Wrks)	Nesquchoning, PA	01/21/1999	Denium Jeans.
35,871	Morven Partners (Wrks)	Gorman, TX	02/11/1999	Peanuts.
35,872	B and H Apparel, Inc (Comp)	Mullins, SC	03/08/1999	Clothing Assembly.
35,873	Brand S, Inc (Comp)	Corvallis, OR	03/04/1999	Architectural/plywood.
35,874	Southwestern Energy Co (Wrks)	Oklahoma City, OK	02/22/1999	Crude Oil and Natural Gas.
35,875	E and H Industrial Supply (Comp)	Williston, ND	03/03/1999	Pumping Unit Bridles.
35,876	Equity Oil Co (Comp)	Salt Lake City, UT	03/05/1999	Clerical Staff—Oil and Gas.
35,877	Production Testing Serv. (Wrks)	Anchorage, AK	03/01/1999	Oil and Gas Testing.
35,878	VingCard, Inc (Comp)	Dallas, TX	03/03/1999	Plastic Keycards for Hotel Rooms.
35,879	Marui International (Wrks)	El Paso, TX	03/03/1999	Automotive Parts.
35,880	Henkel Corp., Chemical (Comp)	Los Angeles, CA	03/10/1999	Olechemicals (Veg Fatty Acids).
35,881	Perry and Perry, Inc (Comp)	Midland, TX	02/25/1999	Crude Oil.
35,882	Artcraft Industries (Wrks)	Milwaukee, WI	03/01/1999	Mass Transit Seating.
35,883A	Jones Drilling (Wrks)	All Locations, TX	03/04/1999	Oil, Gas Exploration, Drilling.
35,883B	Jones Drilling (Wrks)	All Locations, OK	03/04/1999	Oil, Gas Exploration, Drilling.
35,883	Jones Drilling (Wrks)	Midland, TX	03/04/1999	Oil, Gas Exploration, Drilling.
35,884	Siebe Appliance Control (Comp)	Winterset, IA	03/04/1999	Electronic Appliance Control Assembly.
35,885	Willamette Industries Inc (USWA)	Kingsport, TN	03/06/1999	Coated Paper.
35,886	Justin Boot Co (Wrks)	Sarcoxie, MO	03/03/1999	Leather Boots.
35,887	Hydroform USA, Inc. (Comp)	Carson, CA	03/08/1999	Airframe Parts and Assemblies.
35,888	North Power LLC (Wrks)	Arcade, NY	03/10/1999	Heavy Duty Alternators.
35,889	Omimex Energy, Inc (Comp)	Mason, MI	03/08/1999	Oil and Gas.
35,890	Morris Button Co (Wrks)	New York, NY	03/04/1999	Buttons.
35,891	Corinth Acquisition (Comp)	Corinth, MS	03/09/1999	Men's Jackets.
35,892	Martin Copeland Eyeware (Wrks)	Bristol, RI	03/08/1999	Eye Glass Frames.
35,893	Natchiq, Inc (Comp)	Anchorage, AK	03/08/1999	Oilfield Services.
35,894	Revelation Bra Co (Comp)	East Boston, MA	03/03/1999	Brassieres.
35,895	Guilford of Maine (Wrks	Newport, ME	03/15/1999	Fabric.
35,896	Electroalloys Corp (Wrks)	Elyria, OH	03/12/1999	Alloys.
35,897	West Bend Co (The) (PACE)	West Bend, WI	02/26/1999	Electric Kitchens Appliances.
35,898	American Alloys, Inc (Comp)	New Haven, WV	03/03/1999	Ferrosilicon.
35,899	Consolidation Coal (UMWA)	Osage, WV	03/05/1999	Steam Coal.
35,900	Item-Eye, Inc (Wrks)	New York, NY	02/10/1999	Sportswear.
35,901	American Cabinetry, Inc (Comp)	Cranbury, NJ	03/03/1999	Kitchen Cabinetry.
35,902	General Electric Ind. Sys (Comp)	Morison, IL	03/03/1999	Wall Thermostats.
35,903	Independence Mining Co (Comp)	Elko, NV	03/05/1999	Gold.
35,904	Carhartt, Inc (UFCW)	McKenzie, TN	02/28/1999	Bib Overalls.
35,905	Hughes—JVC Technology (Comp)	Carlsbad, CA	03/05/1999	Lare Screen Projectors.
35,906	Ribbon Narrow Fabrics (UAW)	Secaucus, NJ	03/05/1999	Cut Edge and Novelty Ribbons.
35,907	Grand Fashions, Inc (Wrks)	West New York, NJ	03/02/1999	Ladies' Coats.
35,908	Block Drug, Inc (Wrks)	Dayton, NJ	03/01/1999	Toothpaste, Toilet Bowl Cleaners.
35,909	O.S. Kelly Co (The) (Comp)	Springfield, OH	02/26/1999	Piano Plates.
35,910	Hytek Microsystems, Inc (Comp)	Carson City, NV	03/03/1999	Hybrid Components.
35,911	Morrow Snowboards, Inc (Wrks)	Salem, OR	03/01/1999	Snowboards.
35,912	Yamamoto Manufacturing (Wrks)	Beaverton, OR	03/09/1999	Printed Circuit Boards.
35,913	Salant Corp (Comp)	Long Island Cty, NY	03/10/1999	Men's and Children's Belts, Tides.
35,914	Plainville Oil Well Serv. (Wrks)	Plainville, KS	01/07/1999	Oil Well Services.
35,915	VF Jeanswear (Wrks)	Richland, MO	02/16/1999	Denim Jeans.

[FR Doc. 99–8596 Filed 4–6–99; 8:45 am]

BILLING CODE 4510–30–M

DEPARTMENT OF LABOR

Employment and Training Administration

[TA–W–35,124]

Twinstar Semiconductor, Richardson, Texas; Dismissal of Application for Reconsideration

Pursuant to 29 CFR 90.18(C) an application for administrative consideration was filed with the Acting Director of the Office of Trade Adjustment Assistance for workers at Twinstar Semiconductor located in Richardson, Texas. The review indicated that the application contained no new substantial information which would bear importantly on the Department's determination. Therefore, dismissal of the application was issued.

TA–W–35,124; Twinstar Semiconductor Richardson, Texas (March 24, 1999)

Signed at Washington, D.C. this 31st day of March, 1999.

Grant D. Beale,

Acting Director, Office of Trade Adjustment Assistance.

[FR Doc. 99–8594 Filed 4–6–99; 8:45 am]

BILLING CODE 4510–30–M

NATIONAL GAMBLING IMPACT STUDY COMMISSION

Meeting

AGENCY: National Gambling Impact Study Commission.

ACTION: Notice of Public Meeting; Change of Date.

SUMMARY: At its thirteenth regular meeting the National Gambling Impact Study Commission, established under Pub. L. 104–169, dated August 3, 1996, will conduct its normal meeting business; hear possible presentations from one or more subcommittees; continue its ongoing review of Commission research on economic and social gambling impacts; and deliberate on possible findings and recommendations for the Final Report.

DATES: Monday, May 17, 8:30 a.m. to 5:30 p.m. and Tuesday, May 18, 8:30 a.m. to 5:30 p.m.

ADDRESSES: The meeting site is not yet available, but will be located in the Washington, DC area.

Written comments can be sent to the Commission at 800 North Capitol Street, NW, Suite 450, Washington, DC 20002.

STATUS: The meeting will be open to the public both days.

CONTACT PERSONS: For further information contact Craig Stevens at (202) 523–8217 or write to 800 North Capitol St., NW, Suite 450, Washington, DC 20002.

SUPPLEMENTARY INFORMATION: This meeting was originally scheduled and announced for May 11–12 but has been moved to May 17–18, 1999. The exact meeting location will be announced as soon as arrangements are finalized. This information will be faxed to all individuals on the Commission's fax list, posted to the Commission's web site, *www.ngisc.gov.*, and announced in the **Federal Register**.

Tim Bidwill,

Special Assistant to the Chairman.

[FR Doc. 99–8537 Filed 4–6–99; 8:45 am]

BILLING CODE 6802–ET–P

NATIONAL SCIENCE FOUNDATION

Commission on the Advancement of Women and Minorities in Science, Engineering and Technology Development

In accordance with Pub. L. 105–255, the National Science Foundation announces the following meeting:

Name: Commission on the Advancement of Women and Minorities in Science, Engineering and Technology Development (5270).

Date and Time: April 14 (8:30 a.m. to 5:00 p.m.).

Place: Room 1235, National Science Foundation, 4201 Wilson Blvd., Arlington, VA.

Type of Meeting: Open.

Contact Person: Karen Pearce, Executive Secretary, National Science Foundation, 4201 Wilson Blvd., Arlington, VA 22230. Phone (703) 306–1070.

Minutes: May be obtained from the Executive Secretary at the above address.

Purpose of Meeting: To conduct initial commission business, and to carry out the requirements in section 4 of Pub. L. 105–255, and Act to establish the Commission on the Advancement of Women, Minorities in Science, Engineering and Technology Development.

Agenda

Wednesday, April 14—8:30 a.m.—Breakfast Reception

1. Introduction of Commissioners and Commission Business, election of chair
2. Status of Women, Minorities, and Persons with Disabilities; An Overview
3. Academic View
4. Corporate View
5. Scope of Work and Future Meetings

Dated: April 1, 1999.

Janet Silva,

Acting Deputy Director, Division of Human Resource Management.

[FR Doc. 99–8546 Filed 4–6–99; 8:45 am]

BILLING CODE 7555–01–M

NUCLEAR REGULATORY COMMISSION

Carolina Power & Light Company; H. B. Robinson Steam Electric Plant, Unit No. 2 Environmental Assessment and Finding of No Significant Impact

Docket No. 50–261

The U.S. Nuclear Regulatory Commission (the Commission) is considering issuance of an amendment to Facility Operating License DPR–23 issued to Carolina Power and Light Company (the licensee) for operation of the H. B. Robinson Steam Electric Plant (HBRSEP), Unit 2, located at the licensee's site in Darlington County, South Carolina.

Environmental Assessment

Identification of the Proposed Action

The proposed action would amend the Facility Operating License to reflect a revision to the HBRSEP Updated Final Safety Analysis Report (UFSAR) to include the evaluation of a previously unanalyzed spent fuel cask drop scenario. The analysis also considered a second scenario of potential damage by lateral movement of the cask into plant equipment that results in damage to the valves while shipping with the valve covers removed. The cask drop scenario is hypothesized to occur during movement of spent fuel shipping cask model IF–300, without the cask valve covers installed, from the decontamination facility at the HBRSEP to the shipping railcar using a crane in a non-single-failure-proof configuration, i.e. using a non-redundant cask lifting yoke. The maximum potential height from which the cask could be dropped during the time of transfer with a non-redundant cask lifting yoke is 30 feet. The postulated accident associated with lateral movement of the cask could occur anytime during the general handling of the cask without the cask valve covers installed. The proposed action is in accordance with the licensee's request for NRC review dated August 28, 1997, as supplemented by letters dated June 17, 1998, October 29, 1998, and February 11, 1999.

The Need for the Proposed Action

At HBRSEP, Unit No. 2, loaded Spent Fuel Shipping Casks are shipped by rail

to CP&L's Shearon Harris Nuclear Power Plant (SHNPP), where the fuel is placed in long-term storage in the SHNPP spent fuel pool. With the cask valve covers installed the IF–300 shipping cask is designed to withstand being dropped from 30 feet onto an unyielding surface. The current Certificate of Compliance (CoC) for the IF–300 cask requires the valve box covers be fully installed. However, during a portion of the overall cask handling process, CP&L is constrained in its movement of this cask. The cask cannot be transferred by crane in the single-failure-proof configuration from the railcar to the cask decontamination area of the Fuel Handling Building (FHB) or returned to the railcar because the redundant lifting yoke cannot fit onto the cask while the cask is on the railcar. The maximum height of the cask while being lifted with a non-redundant yoke is 30 feet. The valve box covers must be removed to provide access to the valves for off-gas venting from the cask. Because the FHB cask decontamination area cannot accommodate installation or removal of the valve box covers, the covers are removed at the rail car and remain off the cask during all movements in the FHB. Lateral movement of the cask into plant equipment with the valve covers removed or a cask drop while the cask is being transferred using a non-redundant lifting yoke could result in damage to the valves, resulting in a release of noble gas and iodine gap activity to the environment. These scenarios create the possibility of a new or different kind of accident not previously evaluated. The consequences of the cask drop scenario would bound any consequences due to impact during lateral movement. For all of the above reasons, there is a need for a revision to the HBRSEP UFSAR to include the evaluation of a previously unanalyzed spent fuel cask drop scenario to allow the licensee to ship spent fuel using fuel handling procedures that are not currently within the plant's licensing basis.

Environmental Impacts of the Proposed Action

An evaluation has been performed by the licensee to determine the consequences of a postulated 30 foot cask drop accident with less than full integrity, i.e, with the valve box covers removed. The evaluation determined that, while the fuel components would be retained in the cask, the vent/drain valves may be damaged and thus not be gastight. Using the maximum activity loading for the IF–300 cask, this type of release has been evaluated and the whole body and thyroid doses which could result are a small fraction of those previously analyzed for the fuel handling accident in Section 15.7.3 of the UFSAR. The personnel involved in a cleanup after a postulated accident would need to decontaminate a maximum of one cubic foot of material with a dose rate of up to 10 rem/hr at one meter based on the limit established for the maximum allowable water remaining in the cask after loading operations. Personnel exposure rates could be effectively limited by use of temporary shielding and remote handling tools. The release of activity would not be sufficient to initiate the Control Room radiation alarm or pressurization mode of the Control Room ventilation system. The postulated dose to a Control Room occupant was calculated to be 3.5E–03 rem (whole body) and 7.8E–04 rem (thyroid). Dose assessments were performed using maximum potential releases assuming failure of the spent fuel within the cask and radionuclide release from damage to the valves. Calculated doses at the site boundary were 0.0072 rem (whole body) and 0.1233 rem (thyroid). This evaluation also concluded that it will also bound any consequences of the damage due to an impact during a lateral movement, since the dose risks would be a fraction of the consequences of cask drop with less than full integrity.

These results have been, in part, independently verified by the NRC staff. The NRC staff also reviewed the assumptions and methods of analysis in the licensee's radiological consequence analysis to ensure they are conservative, bounding, and consistent with the HBRSEP design basis. Based on the above evaluation, the staff concludes that the licensee has demonstrated with reasonable assurance that maximum radiological consequences of dropping an IF–300 cask at the HBRSEP are radiation doses to members of public that are a small fraction of the numerical criteria in 10 CFR Part 100 and are well within the acceptance criteria in the Standard Review Plan and, therefore, are acceptable. The Commission has completed its evaluation of the proposed action and concludes that there will be an insignificant increase in environmental impact on the dose consequences of a spent fuel cask drop with this change in shipping configuration.

The proposed action will not increase the probability or consequences of accidents previously analyzed. No changes are being made in the types of any effluents that may be released off-site and there is no significant radiological environmental impacts associated with the proposed action.

With regard to potential nonradiological impacts, the proposed action does not involve any historic sites. It does not affect nonradiological plant effluents and has no other environmental impact. Therefore, there are no significant nonradiological environmental impacts associated with the proposed action.

Accordingly, the Commission concludes that there are no significant environmental impacts associated with the proposed action.

Alternatives to the Proposed Action

The Spent Fuel Shipping Cask cannot be lifted in the single failure-proof configuration from the cask decontamination area of the FHB to the railcar with this configuration because the redundant lifting yoke cannot fit onto the cask while the cask is on the railcar. Therefore, alternatives to the proposed activity were considered which include (1) designing a new redundant lifting rig and modifying the shipping cask to allow the Spent Fuel Cask Crane to fit onto the cask while the cask is situated on the railcar; (2) modifying the FHB to accommodate installing the valve box covers on the Spent Fuel Shipping Cask in the cask decontamination area before movement of the cask to the railcar; or (3) ceasing spent fuel shipping operations and loading the spent fuel into Independent Spent Fuel Storage Installation (ISFSI) canisters. For the purposes of this review, the alternatives to the proposed action have been evaluated using the dollar value per Person-Rem of $2000 recommended by NUREG–1530, ''Reassessment of NRC's Dollar Per Person-Rem Conversion Factor Policy.'' Since the postulated consequences at the Site Boundary have been calculated to be 0.0072 Rem, the proposed change to the UFSAR can be assigned a value of approximately $15 per person. From the HBRSEP, Unit No. 2 Emergency Plan, the most populous 90° sector out to 10 miles contained a population of 23,210. Therefore, a dollar value of $350,000 was used for comparison of the proposed activity with its alternatives.

Development of a redundant yoke and modification of the Spent Fuel Cask Crane will involve the design, fabrication, and installation of a one-of-a-kind redundant yoke that can be used for lifts of the Spent Fuel Shipping Cask that include lifting of the cask to the railcar. Modifying the FHB to accommodate installation of the valve box covers prior to lifting the Spent Fuel Shipping Cask from the cask

decontamination area to the railcar would involve a major modification to the unit to enclose a larger cask decontamination area within a controlled air space. It is difficult to provide accurate estimates for the cost of these alternatives because of the numerous variables involved. It is believed that the cost for either of these alternatives will be in excess of $1,000,000.

As an alternative to the proposed amendment, the staff considered denial of the requested amendment; thus, shipment of spent fuel to SHNPP could be terminated. The result of termination of spent fuel shipment would be to require the storage of additional spent fuel onsite until all existing capacity is used or additional capacity is added to allow continued operation until the termination of the HBRSEP, Unit No. 2, operating license on July 31, 2010. The Spent Fuel Pit has already been reracked with high density fuel storage racks, and the addition of storage capacity to the Spent Fuel Pit by further re-racking is not feasible. CP&L maintains an ISFSI license for 8 ISFSI canisters currently containing 56 spent fuel assemblies. No additional capacity is available under the current ISFSI license. The license could be amended to allow additional capacity using a new canister design, or a canister licensed under a general license could be used. The estimated cost of adding sufficient ISFSI storage capacity to permit operation of the unit until the end of the current operating license has been estimated to be approximately $5,000,000.

The action proposed by the licensee of performing the cask lifting operations between the decontamination facility and the railcar with the valve covers removed and using a non-redundant cask lifting yoke has no significant impact on the environment either from routine operations or from a postulated accident in this configuration. The postulated accident dose is only a small fraction of 10 CFR Part 100 limits and within the acceptance criteria of the Standard Review Plan. Therefore, the benefits of the proposed activity substantially outweigh the costs of the alternatives to the proposed activity. Denial of the application would result in no change in current environmental impacts. The environmental impacts of the proposed action and the alternative action are similar.

Alternative Use of Resources

This action does not involve the use of any resources not previously considered in the ''Final Environmental Statement Related to the Operation of H.B. Robinson.''

Agencies and Persons Consulted

In accordance with its stated policy, on February 17, 1999, the staff consulted with the South Carolina State official, Virgil Autry, South Carolina Department of Health, Bureau of Radiological Health and Environmental Control. The State official had no comments.

Finding of No Significant Impact

On the basis of the environmental assessment, the Commission concludes that the proposed action will not have a significant effect on the quality of the human environment. Accordingly, the Commission has determined not to prepare an environmental impact statement for the proposed action.

For further details with respect to the proposed action, see the licensee's letters dated August 28, 1997, June 17, 1998, October 29, 1998, and February 11, 1999, which are available for public inspection at the Commission's Public Document Room, which is located at The Gelman Building, 2120 L Street, NW., Washington, DC, and at the local public document room located at the Hartsville Memorial Library, 147 West College, Hartsville, South Carolina 29550.

Dated at Rockville, Maryland, this 31st day of March 1999.

For the Nuclear Regulatory Commission.

Sheri R. Peterson,

Section Chief, Project Directorate II/Section II–2, Division of Licensing Project Management, Office of Nuclear Reactor Regulation.

[FR Doc. 99–8598 Filed 4–6–99; 8:45 am]

BILLING CODE 7590–01–P

NUCLEAR REGULATORY COMMISSION

Sunshine Act Meeting

DATE: Weeks of April 5, 12, 19, and 26, 1999.

PLACE: Commissioners' Conference Room, 11555 Rockville Pike, Rockville, Maryland.

STATUS: Public and Closed.

MATTERS TO BE CONSIDERED:

Week of April 5—Tentative

There are no meetings scheduled for the Week of April 5.

Week of April 12—Tentative

Wednesday, April 14

9:00 a.m. Briefing on Investigative Matters (Closed—Ex. 5 and 7)

11:00 a.m. Briefing on Remaining Issues Related to Proposed Restart of Millstone Unit 2 (Public Meeting) (Contact: William Dean, 301–415–2240)

Thursday, April 15

3:00 p.m. Affirmation Session (Public Meeting) (If needed)

Friday, April 16

9:30 a.m. Briefing on Rulemaking For Generally Licensed Devices (Public Meeting) (Contact: Patricia Holahan, 301–415–8125)

Week of April 19—Tentative

There are no meetings scheduled for the Week of April 19.

Week of April 26—Tentative

There are no meetings scheduled for the Week of April 26.

---

*The Schedule for Commission meetings is subject to change on short notice. To verify the status of meetings call (Recording)—(301) 415–1292. Contact Person for More Information: Bill Hill (301) 415–1661.

* * * * *

The NRC Commission Meeting Schedule can be found on the Internet at:

http://www.nrc.gov/SECY/smj/schedule.htm

This notice is distributed by mail to several hundred subscribers; if you no longer wish to receive it, or would like to be added to it, please contact the Office of the Secretary, Attn: Operations Branch, Washington, DC 20555 (301–415–1661). In addition, distribution of this meeting notice over the Internet system is available. If you are interested in receiving this Commission meeting schedule electronically, please send an electronic message to wmh@nrc.gov or *dkw@nrc.gov*.

Dated: April 2, 1999.

William M. Hill, Jr.,

SECY Tracking Officer, Office of the Secretary.

[FR Doc. 99–8758 Filed 4–5–99; 12:36 pm]

BILLING CODE 7590–01–M

NUCLEAR REGULATORY COMMISSION

Biweekly Notice; Applications and Amendments to Facility Operating Licenses Involving No Significant Hazards Considerations

I. Background

Pursuant to Pub. L. 97–415, the U.S. Nuclear Regulatory Commission (the Commission or NRC staff) is publishing this regular biweekly notice. Pub. L. 97–

415 revised section 189 of the Atomic Energy Act of 1954, as amended (the Act), to require the Commission to publish notice of any amendments issued, or proposed to be issued, under a new provision of section 189 of the Act. This provision grants the Commission the authority to issue and make immediately effective any amendment to an operating license upon a determination by the Commission that such amendment involves no significant hazards consideration, notwithstanding the pendency before the Commission of a request for a hearing from any person.

This biweekly notice includes all notices of amendments issued, or proposed to be issued from March 13, 1999, through March 26, 1999. The last biweekly notice was published on March 24, 1999 (64 FR 14278).

Notice of Consideration of Issuance of Amendments to Facility Operating Licenses, Proposed No Significant Hazards Consideration Determination, and Opportunity for a Hearing

The Commission has made a proposed determination that the following amendment requests involve no significant hazards consideration. Under the Commission's regulations in 10 CFR 50.92, this means that operation of the facility in accordance with the proposed amendment would not (1) involve a significant increase in the probability or consequences of an accident previously evaluated; or (2) create the possibility of a new or different kind of accident from any accident previously evaluated; or (3) involve a significant reduction in a margin of safety. The basis for this proposed determination for each amendment request is shown below.

The Commission is seeking public comments on this proposed determination. Any comments received within 30 days after the date of publication of this notice will be considered in making any final determination.

Normally, the Commission will not issue the amendment until the expiration of the 30-day notice period. However, should circumstances change during the notice period such that failure to act in a timely way would result, for example, in derating or shutdown of the facility, the Commission may issue the license amendment before the expiration of the 30-day notice period, provided that its final determination is that the amendment involves no significant hazards consideration. The final determination will consider all public and State comments received before action is taken. Should the Commission take this action, it will publish in the **Federal Register** a notice of issuance and provide for opportunity for a hearing after issuance. The Commission expects that the need to take this action will occur very infrequently.

Written comments may be submitted by mail to the Chief, Rules and Directives Branch, Division of Administration Services, Office of Administration, U.S. Nuclear Regulatory Commission, Washington, DC 20555–0001, and should cite the publication date and page number of this **Federal Register** notice. Written comments may also be delivered to Room 6D22, Two White Flint North, 11545 Rockville Pike, Rockville, Maryland from 7:30 a.m. to 4:15 p.m. Federal workdays. Copies of written comments received may be examined at the NRC Public Document Room, the Gelman Building, 2120 L Street, NW., Washington, DC. The filing of requests for a hearing and petitions for leave to intervene is discussed below.

By April 23, 1999, the licensee may file a request for a hearing with respect to issuance of the amendment to the subject facility operating license and any person whose interest may be affected by this proceeding and who wishes to participate as a party in the proceeding must file a written request for a hearing and a petition for leave to intervene. Requests for a hearing and a petition for leave to intervene shall be filed in accordance with the Commission's ''Rules of Practice for Domestic Licensing Proceedings'' in 10 CFR Part 2. Interested persons should consult a current copy of 10 CFR 2.714 which is available at the Commission's Public Document Room, the Gelman Building, 2120 L Street, NW., Washington, DC and at the local public document room for the particular facility involved. If a request for a hearing or petition for leave to intervene is filed by the above date, the Commission or an Atomic Safety and Licensing Board, designated by the Commission or by the Chairman of the Atomic Safety and Licensing Board Panel, will rule on the request and/or petition; and the Secretary or the designated Atomic Safety and Licensing Board will issue a notice of a hearing or an appropriate order.

As required by 10 CFR 2.714, a petition for leave to intervene shall set forth with particularity the interest of the petitioner in the proceeding, and how that interest may be affected by the results of the proceeding. The petition should specifically explain the reasons why intervention should be permitted with particular reference to the following factors: (1) The nature of the petitioner's right under the Act to be made a party to the proceeding; (2) the nature and extent of the petitioner's property, financial, or other interest in the proceeding; and (3) the possible effect of any order which may be entered in the proceeding on the petitioner's interest. The petition should also identify the specific aspect(s) of the subject matter of the proceeding as to which petitioner wishes to intervene. Any person who has filed a petition for leave to intervene or who has been admitted as a party may amend the petition without requesting leave of the Board up to 15 days prior to the first prehearing conference scheduled in the proceeding, but such an amended petition must satisfy the specificity requirements described above.

Not later than 15 days prior to the first prehearing conference scheduled in the proceeding, a petitioner shall file a supplement to the petition to intervene which must include a list of the contentions which are sought to be litigated in the matter. Each contention must consist of a specific statement of the issue of law or fact to be raised or controverted. In addition, the petitioner shall provide a brief explanation of the bases of the contention and a concise statement of the alleged facts or expert opinion which support the contention and on which the petitioner intends to rely in proving the contention at the hearing. The petitioner must also provide references to those specific sources and documents of which the petitioner is aware and on which the petitioner intends to rely to establish those facts or expert opinion. Petitioner must provide sufficient information to show that a genuine dispute exists with the applicant on a material issue of law or fact. Contentions shall be limited to matters within the scope of the amendment under consideration. The contention must be one which, if proven, would entitle the petitioner to relief. A petitioner who fails to file such a supplement which satisfies these requirements with respect to at least one contention will not be permitted to participate as a party.

Those permitted to intervene become parties to the proceeding, subject to any limitations in the order granting leave to intervene, and have the opportunity to participate fully in the conduct of the hearing, including the opportunity to present evidence and cross-examine witnesses.

If a hearing is requested, the Commission will make a final determination on the issue of no significant hazards consideration. The

final determination will serve to decide when the hearing is held.

If the final determination is that the amendment request involves no significant hazards consideration, the Commission may issue the amendment and make it immediately effective, notwithstanding the request for a hearing. Any hearing held would take place after issuance of the amendment.

If the final determination is that the amendment request involves a significant hazards consideration, any hearing held would take place before the issuance of any amendment.

A request for a hearing or a petition for leave to intervene must be filed with the Secretary of the Commission, U.S. Nuclear Regulatory Commission, Washington, DC 20555–0001, Attention: Rulemakings and Adjudications Staff, or may be delivered to the Commission's Public Document Room, the Gelman Building, 2120 L Street, NW., Washington DC, by the above date. A copy of the petition should also be sent to the Office of the General Counsel, U.S. Nuclear Regulatory Commission, Washington, DC 20555–0001, and to the attorney for the licensee.

Nontimely filings of petitions for leave to intervene, amended petitions, supplemental petitions and/or requests for a hearing will not be entertained absent a determination by the Commission, the presiding officer or the Atomic Safety and Licensing Board that the petition and/or request should be granted based upon a balancing of factors specified in 10 CFR 2.714(a)(1)(i)–(v) and 2.714(d).

For further details with respect to this action, see the application for amendment which is available for public inspection at the Commission's Public Document Room, the Gelman Building, 2120 L Street, NW., Washington, DC, and at the local public document room for the particular facility involved.

Arizona Public Service Company, et al., Docket Nos. STN 50–528, STN 50–529, and STN 50–530, Palo Verde Nuclear Generating Station, Units Nos. 1, 2, and 3, Maricopa County, Arizona

Date of amendments request: February 26, 1999.

Description of amendments request: The proposed amendment would revise Technical Specification (TS) 3.5.3, ''Emergency Core Cooling System—Operating,'' to extend the completion time for one inoperable low pressure safety injection subsystem from 72 hours to 7 days.

Basis for proposed no significant hazards consideration determination: As required by 10 CFR 50.91(a), the licensee has provided its analysis of the issue of no significant hazards consideration, which is presented below:

1. The proposed change does not involve a significant increase in the probability or consequences of an accident previously evaluated.

The proposed amendment does not involve a significant increase in the probability or consequences of an accident previously evaluated. The proposed amendment will extend the Completion Time for one inoperable low pressure safety injection (LPSI) subsystem in Technical Specification (TS) 3.5.3, Emergency Core Cooling Systems (ECCE)[S]—Operating, from 72 hours to 7 days. The LPSI subsystem is part of the ECCS train and part of the shutdown cooling subsystem. The LPSI components are not accident initiators in any accident previously evaluated. Therefore, this change does not involve a significant increase in the probability of an accident previously evaluated.

The LPSI system is primarily designed to mitigate the consequences of a large break loss of coolant accident (LOCA). These proposed changes do not affect any of the assumptions used in the deterministic LOCA analysis.

In order to evaluate the LPSI Completion Time extension with respect to the ECCS, probabilistic safety analysis (PSA) methods were utilized. The results of these analyses show no significant increase in the core damage frequency. As a result, there would be no significant increase in the consequences of an accident previously evaluated. These analyses are detailed in CE NPSD–995, Combustion Engineering Owners Group ''Joint Applications Report for Low Pressure Safety Injection System AOT Extension,'' May 1995, as supplemented by updated PVNGS data provided in the attachment to this enclosure.

2. The proposed change does not create the possibility of a new or different kind of accident from any accident previously evaluated.

The proposed change does not create the possibility of a new or different kind of accident from any accident previously evaluated. The proposed amendment will extend the Completion Time for one inoperable low pressure safety injection (LPSI) subsystem in Technical Specification (TS) 3.5.3, Emergency Core Cooling Systems (ECCE)[S]—Operating, from 72 hours to 7 days. The proposed change does not change the design, configuration, or method of operation of the plant. Therefore, this change does not create the possibility of a new or different kind of accident from any previously evaluated.

3. The proposed change does not involve a significant reduction in a margin of safety.

The proposed change does not involve a significant reduction in a margin of safety. The proposed amendment will extend the Completion Time for one inoperable low pressure safety injection (LPSI) subsystem in Technical Specification (TS) 3.5.3, Emergency Core Cooling Systems (ECCE)[S]—Operating, from 72 hours to 7 days. The proposed change does not affect the limiting conditions for operation or their bases used in the deterministic analyses to establish the margin of safety. PSA evaluations were used to evaluate these changes. These evaluations demonstrate that the changes will be risk neutral or risk beneficial for PVNGS. These evaluations are detailed in CE NPSD–995, as supplemented by updated data provided in the attachment to this enclosure.

The NRC staff has reviewed the licensee's analysis and, based on that review, it appears that the three standards of 50.92(c) are satisfied. Therefore, the NRC staff proposes to determine that the amendments request involve no significant hazards consideration.

Local Public Document Room location: Phoenix Public Library, 1221 N. Central Avenue, Phoenix, Arizona 85004.

Attorney for licensee: Nancy C. Loftin, Esq., Corporate Secretary and Counsel, Arizona Public Service Company, P.O. Box 53999, Mail Station 9068, Phoenix, Arizona 85072–3999.

NRC Project Director: William H. Bateman.

Consolidated Edison Company of New York, Docket No. 50–247, Indian Point Nuclear Generating Unit No. 2, Westchester County, New York

Date of amendment request: January 22, 1999.

Description of amendment request: The proposed amendment would revise Technical Specifications (TSs) Sections 3.7.D.1.g, 6.2.2.h and 6.3.1. Specifically, (1) Section 3.7.D.1.g would be revised to correct an editorial error; (2) Section 6.2.2.h would be revised to change the senior reactor operator license requirement for the Operations Manager; and (3) Section 6.3.1 would modify the qualification requirement for the Operations Manager.

Basis for proposed no significant hazards consideration determination: As required by 10 CFR 50.91(a), the licensee has provided its analysis of the issue of no significant hazards consideration, which is presented below:

1. The proposed change does not involve a significant increase in the probability or consequences of an accident previously evaluated.

The proposed change [to Section 3.7.D.1.g] is administrative in nature. It involves making an editorial change to provide the correct functional description of the breakers. This change does not affect possible initiating events for accidents previously evaluated or alter the configurations or operation of the facility. The Limiting Safety Systems Settings and Safety Limits specified in the current Technical Specifications

remain unchanged. Therefore, the proposed change to the subject Technical Specification would not increase the probability or consequences of an accident previously evaluated.

The proposed change [to Section 6.2.2.h] is administrative in nature. The individual who provides the day to day direction of the activities of the operating shift will still possess an SRO [Senior Reactor Operator] license and this proposed change is consistent with the statement in NUREG–1431, Section 5.2.2.f. This change does not affect possible initiating events for accidents previously evaluated or alter the configuration or operation of the facility. The Limiting Safety Systems Settings and Safety Limits specified in the current Technical Specifications remain unchanged. Therefore, the proposed change to the subject Technical Specification would not increase the probability or consequences of an accident previously evaluated.

The proposed change [to Section 6.3.1] is administrative in nature. The individual who provides the day to day direction of the activities of the operating shift will still possess an SRO license and this proposed change is consistent with the statement in NUREG–1431, Section 5.2.2.f. This change does not affect possible initiating events for accidents previously evaluated or alter the configuration or operation of the facility. The Limiting Safety Systems Settings and Safety Limits specified in the current Technical Specifications remain unchanged. Therefore, the proposed change to the subject Technical Specification would not increase the probability or consequences of an accident previously evaluated.

2. The proposed change does not create the possibility of a new or different kind of accident from any accident previously evaluated.

As stated above, the proposed change [to Section 3.7.D.1.g] is administrative in nature. The safety analysis of the facility remains complete and accurate. There are no physical changes to the facility and the plant conditions for which the design basis accidents have been evaluated are still valid. The operating procedures and emergency procedures are unaffected. Consequently, no new failure modes are introduced as a result of the proposed change. Therefore, the proposed change will not initiate any new or different kind of accident.

The proposed change [to Section 6.2.2.h] is administrative in nature. The safety analysis of the facility remains complete and accurate. There are no physical changes to the facility and the plant conditions for which the design basis accidents have been evaluated are still valid. The operating procedures and emergency procedures are unaffected. Consequently, no new failure modes are introduced as a result of the proposed changes. Therefore, the proposed change will not initiate any new or different kind of accident.

The proposed change [to Section 6.3.1] is administrative in nature. The safety analysis of the facility remains complete and accurate. There are no physical changes to the facility and the plant conditions for which the design basis accidents have been evaluated are still valid. The operating procedures and emergency procedures are unaffected. Consequently, no new failure modes are introduced as a result of the proposed changes. Therefore, the proposed change will not initiate any new or different kind of accident.

3. The proposed change does not involve a significant reduction in a margin of safety.

The proposed change [to Section 3.7.D.1.g] is administrative in nature. Since there are no changes to the operation of the facility or physical design the Updated Final Safety Analysis Report (UFSAR) design basis, accident assumptions, or Technical Specification Bases are not affected. Therefore, the proposed changes will not result in a reduction in the margin of safety.

The proposed change [to Section 6.2.2.h] is administrative in nature. Since there are no changes to the operation of the facility or physical design the Updated Final Safety Analysis Report (UFSAR) design basis, accident assumptions, or Technical Specification Bases are not affected. Therefore, the proposed changes will not result in a reduction in the margin of safety.

The proposed change [to Section 6.3.1] is administrative in nature. Since there are no changes to the operation of the facility or physical design the Updated Final Safety Analysis Report (UFSAR) design basis, accident assumptions, or Technical Specification Bases are not affected. Therefore, the proposed changes will not result in a reduction in the margin of safety.

The NRC staff has reviewed the licensee's analysis and, based on this review, it appears that the three standards of 50.92(c) are satisfied. Therefore, the NRC staff proposes to determine that the amendment request involves no significant hazards consideration.

Local Public Document Room location: White Plains Public Library, 100 Martine Avenue, White Plains, New York 10610.

Attorney for licensee: Brent L. Brandenburg, Esq., 4 Irving Place, New York, New York 10003.

NRC Project Director: S. Singh Bajwa, Director.

Consolidated Edison Company of New York, Docket No. 50–247, Indian Point Nuclear Generating Unit No. 2, Westchester County, New York

Date of amendment request: January 22, 1999.

Description of amendment request: The proposed amendment would revise Technical Specifications (TSs) Section 4.3. Specifically, the revision would permit the reactor coolant system (RCS) leak test to be performed at normal operating pressure after it has been closed following normal opening in lieu of a hydrostatic test being performed at 2335 psig.

Basis for proposed no significant hazards consideration determination: As required by 10 CFR 50.91(a), the licensee has provided its analysis of the issue of no significant hazards consideration, which is presented below:

1. The proposed change does not involve a significant increase in the probability or consequences of an accident previously evaluated.

The proposed license amendment does not involve a significant increase in the probability or consequences of an accident previously evaluated. The change proposes a system leakage test for the RCS that is comparable to the hydrostatic test that it replaces, as acknowledged by the NRC approval of ASME Code Case N–498, ''Alternative Rules for 10-Year Hydrostatic Pressure Testing for Class 1 and 2 Systems Section XI, Division 1,'' and the ASME [American Society for Mechanical Engineers] Boiler and Pressure Vessel Code, Section XI. [. . .] The proposed change to substitute a system leak test at normal operating pressure in lieu of the hydrostatic test at 2335 psig will minimize challenge to plant safety and demonstrate leak tightness of the RCS. Therefore, the proposed change would not involve a significant increase in the probability or consequences of an accident previously evaluated.

2. The proposed change does not create the possibility of a new or different kind of accident from any accident previously evaluated.

The proposed license amendment does not create the possibility of a new or different kind of accident from any accident previously evaluated. The proposed changes do not involve the addition of any new or different type of equipment, nor do they involve the operation of equipment required for safe operation of the facility in a manner different from those addressed in the Updated Final Safety Analysis Report. [. . .] Based on industry experience, it is expected that any leaks would be discovered by the leak test at normal operating pressure.

3. The proposed change does not involve a significant reduction in a margin of safety.

The proposed license amendment does not involve a significant reduction in a margin of safety. The proposed changes do not adversely affect performance of any safety related system or component, instrument operation, or safety system setpoints and do not result in increased severity of any of the accidents considered in the safety analysis. Although the current basis states that if the system does not leak at 2335 psig (operating pressure + 100 psig) it will be leak tight during normal operation, industry experience demonstrates that leaks are not discovered as a result of hydrostatic test pressure propagating a preexisting flaw through wall. In most cases, leaks are discovered when the system is at normal operating pressure. Also, testing will continue to be performed as required by the ASME Boiler and Pressure Vessel Code Section XI.

The NRC staff has reviewed the licensee's analysis and, based on this review, it appears that the three standards of 50.92(c) are satisfied.

Therefore, the NRC staff proposes to determine that the amendment request involves no significant hazards consideration.

Local Public Document Room location: White Plains Public Library, 100 Martine Avenue, White Plains, New York 10610.

Attorney for licensee: Brent L. Brandenburg, Esq., 4 Irving Place, New York, New York 10003.

NRC Project Director: S. Singh Bajwa, Director.

Florida Power and Light Company, Docket Nos. 50–250 and 50–251, Turkey Point Plant Units 3 and 4, Dade County, Florida

Date of amendment request: March 8, 1999.

Description of amendment request: The proposed amendments would delete certain requirements from Technical Specification (TS) Section 6.0 ''Administrative Controls'' that are adequately controlled by existing regulations, other than 10 CFR 50.36 and the TS. The amendments also relocate selected requirements from TS Section 6.0 to the licensee's controlled documents such as the Turkey Point Units 3 and 4 Updated Final Safety Analysis Report (UFSAR). The amendments also clarify certain provisions of TS Section 6.0. The proposed changes are to relocate, revise, delete, or clarify the following provisions of the TS:

Existing TS section	Subject	Proposed change
6.2.2.f	Administrative Controls on Working Hours of Plant Staff	Partly delete, partly relocate within TS.
Table 6.2–1	Minimum Shift Crew Composition	Clarify.
6.2.3	Shift Technical Advisor	Clarify.
6.4	Training	Delete.
6.5	Review and Audit	Relocate to UFSAR.
6.6	Reportable Event Action	Partly delete, partly relocate to UFSAR.
6.8.2	Review and Approval of Procedures	Relocate to UFSAR.
6.8.3	Temporary Changes to Procedures	Relocate to UFSAR.
6.8.4.b	In-Plant Radiation Monitoring	Relocate to UFSAR.
6.8.4.g	Radiological Environmental Monitoring Program	Relocate to UFSAR.
6.10	Record Retention	Relocate to UFSAR.
6.11	Radiation Protection Program	Relocate to UFSAR.
6.12	High Radiation Area	Clarify.
6.13	Process Control Program (PCP)	Relocate to UFSAR.
6.14	Offsite Dose Calculation Manual (ODCM)	Revise to reflect changes to 6.5 & 6.10.

Basis for proposed no significant hazards consideration determination: As required by 10 CFR 50.91(a), the licensee has provided its analysis of the issue of no significant hazards consideration, which is presented below:

1. Operation of the plant in accordance with the proposed amendments would not involve a significant increase in the probability or consequences of an accident previously evaluated.

The proposed amendments do not involve a significant increase in the probability or consequences of an accident previously evaluated because the proposed changes are administrative in nature. These proposed changes will not involve a significant increase in the probability or consequences of an accident previously evaluated because they do not affect assumptions contained in plant safety analyses, the physical design and/or operation of the plant, nor do they affect Technical Specifications that preserve safety analysis assumptions. None of the proposed changes involve a physical modification to the plant, a new mode of operation or a change to the UFSAR transient analyses. No Limiting Condition for Operation, ACTION statement or Surveillance Requirement is affected by any of the proposed changes. Also, these proposed changes, in themselves, do not reduce the level of qualification or training such that personnel requirements would be decreased. Further, the Proposed changes do not alter the design, function, or operation of any plant component. Therefore, the proposed changes do not affect the probability or consequences of accidents previously evaluated.

2. Operation of the plant in accordance with the proposed amendments would not create the possibility of a new or different kind of accident from any accident previously evaluated.

The proposed changes do not create the possibility of a new or different kind of accident from any accident previously evaluated. The changes being proposed are administrative in nature and do not affect assumptions contained in plant safety analyses, the physical design and/or modes of plant operation defined in the plant operating license, or Technical Specifications that preserve safety analysis assumptions. The proposed changes do not introduce a new mode of plant operation or surveillance requirement, nor involve a physical modification to the plant. The proposed changes are administrative in nature. The changes propose to revise, delete, or relocate the stated administrative control provisions from the TS to the UFSAR whereby adequate control of information is maintained. Furthermore, the proposed changes do not alter the design, function, or operation of any plant components. Therefore, the proposed changes do not create the possibility of a new or different kind of accident from any accident previously evaluated.

3. Operation of the plant in accordance with the proposed amendments would not involve a significant reduction in a margin of safety.

The proposed changes do not involve a significant reduction in a margin of safety because they are administrative in nature. The operating limits and functional capabilities of the affected systems, structures, and components are unchanged by the proposed amendments. None of the proposed changes involve a physical modification to the plant, a new mode of operation or a change to the UFSAR transient analyses. No Limiting Condition for Operation, ACTION statement, or Surveillance Requirement is affected. Additionally, the proposed changes do not alter the scope of equipment currently required to be OPERABLE or subject to surveillance testing, nor does the proposed change affect any instrument setpoints or equipment safety functions. Therefore, the change does not involve a significant reduction in a margin of safety.

The NRC staff has reviewed the licensee's analysis and, based on this review, it appears that the three standards of 50.92(c) are satisfied. Therefore, the NRC staff proposes to determine that the amendment request involves no significant hazards consideration.

Local Public Document Room location: Florida International University, University Park, Miami, Florida 33199.

Attorney for licensee: M.S. Ross, Attorney, Florida Power & Light, P.O. Box 14000, Juno Beach, Florida 33408–0420.

NRC Project Director: Cecil O. Thomas.

GPU Nuclear, Inc. etal., Docket No. 50–219, Oyster Creek Nuclear Generating Station, Ocean County, New Jersey

Date of amendment request: December 23, 1998.

Description of amendment request: The proposed Technical Specification (TS) change request will change the surveillance frequency for verifying the operability of motor-operated isolation valves and condensate makeup valves in the Isolation Condenser TS 4.8.A.1 and Bases page from once per month to once per 3 months.

Basis for proposed no significant hazards consideration determination: As required by 10 CFR 50.91(a), the licensee has provided its analysis of the issue of no significant hazards consideration, which is presented below:

1. The proposed TS change does not involve a significant increase in the probability or consequences of an accident previously evaluated.

The proposed surveillance interval change does not alter the actual surveillance requirements, nor does it alter the limits and restrictions on plant operations. The reliability of systems and components relied upon to prevent or mitigate the consequences of accidents previously evaluated is not degraded by the proposed change to the surveillance interval. Assurance of system and equipment availability is maintained. The proposed change does not alter any system or equipment configuration.

Based on the above, the proposed change does not significantly increase the probability or consequences of a[n] accident previously evaluated.

2. The proposed TS change does not create the possibility of a new or different kind of accident from any accident previously evaluated.

The proposed surveillance interval change does not alter the actual surveillance requirements, nor does it alter the limits and restrictions on plant operations. Assurance of system and equipment availability is maintained. The proposed change does not alter any system or equipment configuration nor does it introduce any new mechanisms which could contribute to the creation of a new or different kind of accident than previously evaluated.

3. The proposed TS changes do not involve a significant reduction in a margin of safety.

The proposed change extends the surveillance interval for verifying the operability of Isolation Condenser motor-operated isolation valves and condensate makeup valves from once per month to once per three months. The proposed change does not alter the actual surveillance requirements, the limits and restrictions on plant operations nor the design, function or manner of operation of any structures, systems or components. System availability and reliability are maintained. Accordingly, the proposed TS change does not involve a significant reduction in a margin of safety.

The NRC staff has reviewed the licensee's analysis and, based on this review, it appears that the three standards of 10 CFR 50.92(c) are satisfied. Therefore, the NRC staff proposes to determine that the amendment request involves no significant hazards consideration.

Local Public Document Room location: Ocean County Library, Reference Department, 101 Washington Street, Toms River, NJ 08753.

Attorney for licensee: Ernest L. Blake, Jr., Esquire, Shaw, Pittman, Potts & Trowbridge, 2300 N Street, NW., Washington, DC 20037.

NRC Project Director: Elinor G. Adensam.

GPU Nuclear, Inc. et al., Docket No. 50–219, Oyster Creek Nuclear Generating Station, Ocean County, New Jersey

Date of amendment request: February 12, 1999.

Description of amendment request: The proposed Technical Specification (TS) change will delete the organizational chart and the related organizational references from the Appendix B Environmental TS and revise the appearance and format of the Environmental TS.

Basis for proposed no significant hazards consideration determination: As required by 10 CFR 50.91(a), the licensee has provided its analysis of the issue of no significant hazards consideration, which is presented below:

1. The proposed change does not involve a significant increase in the probability or consequences of an accident previously evaluated because deletion of the organization charts and other organizational references in the [Environmental Technical Specifications] ETS does not affect plant operation. GPU Nuclear will continue to inform the NRC of organizational changes through other required controls.

2. The proposed change does not create the possibility of a new or different type of accident than previously evaluated because the proposed change is administrative in nature, and no physical alteration of plant configuration, changes to setpoints or operating parameters are proposed.

3. The proposed change does not involve a significant reduction in the margin of safety because it does not alter the design, function or manner of operation of any structures, systems or components. Organizational structure or its representation does not directly impact the margin of safety.

The NRC staff has reviewed the licensee's analysis and, based on this review, it appears that the three standards of 10 CFR 50.92(c) are satisfied. Therefore, the NRC staff proposes to determine that the amendment request involves no significant hazards consideration.

Local Public Document Room location: Ocean County Library, Reference Department, 101 Washington Street, Toms River, NJ 08753.

Attorney for licensee: Ernest L. Blake, Jr., Esquire, Shaw, Pittman, Potts & Trowbridge, 2300 N Street, NW., Washington, DC 20037.

NRC Project Director: Elinor G. Adensam.

IES Utilities Inc., Docket No. 50–331, Duane Arnold Energy Center, Linn County, Iowa.

Date of amendment request: February 18, 1999.

Description of amendment request: The proposed amendment would revise Duane Arnold Energy Center (DAEC) Technical Specification (TS) Table 3.3.6.1–1, ''Primary Containment Isolation Instrumentation,'' by deleting the manual initiation function of the high pressure coolant injection (HPCI) system and reactor core isolation cooling (RCIC) system isolation. A related condition as well as corresponding surveillance requirements and bases would also be deleted. Thus, the change would (1) revise Table 3.3.6.1–1 by removing items 3j. and 4.j.; (2) revise Note 2 to Surveillances to Licensing Condition for Operation (LCO) 3.3.6.1 by deleting information regarding items 3 j. and 4.j.; and (3) revise LCO 3.3.6.1 by removing Condition G and Surveillance Requirement 3.3.6.1.10.

Basis for proposed no significant hazards consideration determination: As required by 10 CFR 50.91(a), the licensee has provided its analysis of the issue of no significant hazards consideration, which is presented below:

After reviewing this proposed amendment, we [the licensee] have concluded:

1. The proposed amendment will not involve a significant increase in the probability or consequences of an accident previously evaluated. The Manual Initiation Function for HPCI and RCIC Isolation is not considered to be an initiator for any accident previously evaluated in the UFSAR. Therefore, this change does not involve a significant increase in the probability of any previously evaluated accidents. The Manual Initiation push button channels introduce signals into HPCI and RCIC System isolation logics that are redundant to the automatic protective instrumentation and provide manual isolation capability only if a system initiation signal is present. Technical Specification Section 3.3.6.1 Condition G requires isolation of the System flowpath, which renders the System inoperable and reduces the availability of the System due to the failure of a manually initiated isolation, an isolation which is not assumed in any transient or accident analysis in the UFSAR. Removal of the Manual Initiation Function

for HPCI and RCIC from the Primary Containment Isolation Instrumentation Section of Technical Specifications does not affect the automatic protective instrumentation and the automatic isolation capability. Therefore, this change does not significantly increase the consequences of a previously analyzed accident.

2. The proposed amendment will not create the possibility of a new or different kind of accident from any accident previously evaluated. The proposed change introduces no new mode of plant operation and does not involve physical modification to the plant. Therefore, it does not create the possibility of a new or different kind of accident from any accident previously evaluated.

3. The proposed amendment will not involve a significant reduction in a margin of safety. The proposed change deletes the Manual Initiation Function from Technical Specifications, but no significant reduction in a margin of safety is involved. Technical Specification Section 3.3.6.1 Condition G requires isolation of the System flowpath, which renders the System inoperable and reduces the availability of the System due to the failure of a manually initiated isolation, an isolation that is not assumed in any transient or accident analysis in the UFSAR. Removal of the Manual Initiation Function for HPCI and RCIC from the Primary Containment Isolation Instrumentation Section of Technical Specifications does not affect the automatic protective instrumentation and the isolation capability. This change is acceptable based on the fact that the Manual Initiation Function is not assumed in any accident or transient analysis in the UFSAR.

Based upon the above, we [licensee] have determined that the proposed amendment will not involve a significant hazards consideration.

The NRC staff has reviewed the licensee's analysis and, based on this review, it appears that the three standards of 10 CFR 50.92(c) are satisfied. Therefore, the NRC staff proposes to determine that the amendment request involves no significant hazards consideration.

Local Public Document Room location: Cedar Rapids Public Library, 500 First Street, SE., Cedar Rapids, IA 52401.

Attorney for licensee: Jack Newman, Al Gutterman, Morgan, Lewis & Bockius, 1800 M Street, NW., Washington, DC 20036–5869.

NRC Project Director: T.J. Kim, Acting.

Nebraska Public Power District, Docket No. 50–298, Cooper Nuclear Station, Nemaha County, Nebraska

Date of amendment request: March 1, 1999.

Description of amendment request: The proposed amendment would change the Cooper Nuclear Station (CNS) Technical Specifications (TSs) to revise the calibration frequency of the reactor recirculation flow transmitters from once every 184 days to once every 18 months. This calibration is required as part of TS Surveillance Requirement (SR) 3.3.1.1.10.

Basis for proposed no significant hazards consideration determination: As required by 10 CFR 50.91(a), the licensee has provided its analysis of the issue of no significant hazards consideration, which is presented below:

The proposed amendment will not involve a significant increase in the probability or consequences of an accident previously evaluated. Changing the calibration frequency of the recirculation loop flow transmitters from 184 days to 18 months may increase the amount of drift experienced by the transmitters. However, CNS calculation (NEDC 98–024 [forwarded by letter dated March 10, 1999]) takes into account the 18 month calibration intervals. This calculation, performed in accordance with the General Electric (GE) setpoint methodology for CNS, demonstrates that the expected drift is not significant, and is consistent with past operating experience. Changing the calibration frequency of the flow transmitters does not change any of the precursors assumed in the accident analysis. Therefore, changing the calibration frequency for flow transmitters from 184 days to 18 months does not involve a significant increase in the probability of an accident previously evaluated in the USAR [Updated Safety Analysis Report].

The proposed change will not create the possibility of a new or different kind of accident than evaluated in the USAR. The proposed change does not result in any physical change to plant structures, systems, or components. The proposed change does not alter the form, fit, or function of any equipment or components credited in the accident analyses described in the USAR. Therefore, changing the test frequency does not create the possibility of a new or different kind of accident.

The proposed change will not involve a significant reduction in a margin of safety. This conclusion is based on the fact that the proposed change is consistent with the drift assumptions used in CNS approved calculation (NEDC 98–024). The calibration frequency of 18 months is consistent with the operating practices prior to conversion to Improved Technical Specifications, and is consistent with past operating practice at CNS. Therefore, changing the calibration frequency from 184 days to 18 months does not involve a significant reduction in a margin of safety.

The NRC staff has reviewed the licensee's analysis and, based on this review, it appears that the three standards of 10 CFR 50.92(c) are satisfied. Therefore, the NRC staff proposes to determine that the amendment request involves no significant hazards consideration.

Local Public Document Room location: Auburn Memorial Library, 1810 Courthouse Avenue, Auburn, Nebraska 68305.

Attorney for licensee: Mr. John R. McPhail, Nebraska Public Power District, Post Office Box 499, Columbus, Nebraska 68602–0499.

NRC Project Director: George Dick, Acting.

Northeast Nuclear Energy Company (NNECO), et al., Docket Nos. 50–336 and 50–423, Millstone Nuclear Power Station, Unit Nos. 2 and 3, New London County, Connecticut

Date of amendment request: March 5, 1999.

Description of amendment request: The proposed amendment would relocate certain Technical Specification (TS) Section 6.0 administrative controls to the NRC-approved Northeast Utilities Quality Assurance Program (NUQAP) Topical Report. Specifically, Sections 6.2.3 (Unit 3 only), 6.5, 6.6 (partial), 6.7 (partial), and 6.10. The proposed amendment would also delete parts of Section 6.6 and 6.7 because their requirements are duplicated in existing regulations or elsewhere in the TS. In addition, the proposed amendment would modify the table of contents and other TS sections to incorporate the aforementioned changes (e.g., correct references).

Basis for proposed no significant hazards consideration determination: As required by 10 CFR 50.91(a), the licensee has provided its analysis of the issue of no significant hazards consideration, which is presented below:

In accordance with 10 CFR 50.92, NNECO has reviewed the attached proposed changes and has concluded that they do not involve a Significant Hazards Consideration (SHC). The basis for this conclusion is that the three criteria of 10 CFR 50.92 are not compromised. The proposed changes are not a SHC because the proposed change will not:

1. Involve a significant increase in the probability or consequence of an accident previously evaluated.

No design basis accidents are affected by these proposed changes. The proposed changes relocate portions of the Technical Specifications to the NUQAP Topical Report or remove duplicate sections and are being proposed to eliminate the need for a T.S. change each time there is a related change in the administrative controls for the site.

2. Create the possibility of a new or different kind of accident from any accident previously evaluated.

There are no changes in the way the plant is operated due to these revisions. The potential for an unanalyzed accident is not created. There is no impact on plant response, and no new failure modes are introduced. The proposed deletions and

editorial changes have no impact on safety limits or design basis accidents, and have no potential to create a new or unanalyzed event.

3. Involve a significant reduction in a margin of safety.

These changes do not directly affect any protective boundaries nor do they impact the safety limits for the protective boundaries. These proposed changes relocate portions of the administrative controls to the NUQAP Topical Report or are editorial in nature. Therefore, there is no reduction in the margin of safety.

The NRC staff has reviewed the licensee's analysis and, based on this review, it appears that the three standards of 10 CFR 50.92(c) are satisfied. Therefore, the NRC staff proposes to determine that the amendment request involves no significant hazards consideration.

Local Public Document Room location: Learning Resources Center, Three Rivers Community-Technical College, 574 New London Turnpike, Norwich, Connecticut, and the Waterford Library, ATTN: Vince Juliano, 49 Rope Ferry Road, Waterford, Connecticut.

Attorney for licensee: Lillian M. Cuoco, Esq., Senior Nuclear Counsel, Northeast Utilities Service Company, P.O. Box 270, Hartford, Connecticut.

NRC Project Director: Elinor G. Adensam.

PECO Energy Company, Docket No. 50–353, Limerick Generating Station, Unit 2, Montgomery County, Pennsylvania

Date of amendment request: March 11, 1999.

Description of amendment request: The proposed revision to the Technical Specifications (TSs) involves a change to TS Section 2.1 and its associated TS Bases to revise the minimum critical power ratio (MCPR) Safety Limits for Cycle 6.

Basis for proposed no significant hazards consideration determination: As required by 10 CFR 50.91(a), the licensee has provided its analysis of the issue of no significant hazards consideration, which is presented below:

1. The proposed TS changes do not involve a significant increase in the probability or consequences of an accident previously evaluated.

The revised MCPR Safety Limits for LGS Unit 2 Technical Specifications, and their use to determine cycle-specific thermal limits, have been calculated using NRC-approved methods (i. e, GESTAR–II, Rev. 13) and are based on LGS, Unit 2, Cycle 6 specific inputs. The use of these methods assures that the SLMCPR [safety limit minimum critical power ratio] value is within the existing design and licensing basis, and cannot increase the probability or severity of an accident.

The basis for the MCPR Safety Limit calculation is to ensure that greater than 99.9 percent of all fuel rods in the core avoid transition boiling if the limit is not violated. The MCPR Safety Limit preserves the existing margin to transition boiling and fuel damage in the event of a postulated accident. The probability of fuel damage is not increased.

Therefore, the proposed TS changes do not involve an increase in the probability or consequences of an accident previously evaluated.

2. The proposed TS changes do not create the possibility of a new or different kind of accident from any accident previously evaluated.

The MCPR Safety Limit is a Technical Specification numerical value designed to ensure that fuel damage from transition boiling does not occur as a result of the limiting postulated accident. The MCPR Safety Limit is not an accident initiator; therefore, it cannot create the possibility of any new type of accident. The new MCPR Safety Limits are calculated using NRC-approved methods (i.e., GESTAR–II, Rev. 13) and are based on LGS, Unit 2, Cycle 6 specific inputs.

Therefore, the proposed TS changes do not create the possibility of a new or different kind of accident from any accident previously evaluated.

3. The proposed TS changes do not involve a significant reduction in the margin of safety.

The margin of safety as defined in the TS Bases will remain the same. The new MCPR Safety Limits are calculated using NRC-approved methods (i.e., GESTAR–II, Rev. 13), which are in accordance with the current fuel design and licensing criteria, and are based on LGS, Unit 2, Cycle 6 specific inputs. The MCPR Safety Limit remains high enough to ensure that greater than 99.9 percent of all fuel rods in the core will avoid transition boiling if the limit is not violated, thereby preserving the fuel cladding integrity.

Therefore, the proposed TS changes do not involve a reduction in the margin of safety.

The NRC staff has reviewed the licensee's analysis and, based on this review, it appears that the three standards of 10 CFR 50.92(c) are satisfied. Therefore, the NRC staff proposes to determine that the amendment request involves no significant hazards consideration.

Local Public Document Room location: Pottstown Public Library, 500 High Street, Pottstown, PA 19464.

Attorney for licensee: J. W. Durham, Sr., Esquire, Sr. V.P. and General Counsel, PECO Energy Company, 2301 Market Street, Philadelphia, PA 19101.

NRC Project Director: Elinor G. Adensam.

PP&L, Inc., Docket No. 50–387, Susquehanna Steam Electric Station, Unit 1, Luzerne County, Pennsylvania

Date of amendment request: March 12, 1999.

Description of amendment request: The amendment would modify the Susquehanna Steam Electric Station, Unit 1, Technical Specifications Table 3.3.5.1–1 ''Emergency Core Cooling System Instrumentation.'' The change updates the allowable values for both the Core Spray (CS) and Low Pressure Coolant Injection System (LPCI) ''Reactor Steam Dome Pressure—Low'' functions for initiation and injection permissive. Specifically, the allowable values are being changed from a specified minimum pressure to a specified allowable pressure band. This more restrictive allowable value range will prevent CS and LPCI system overpressurization while still permitting injection to prevent fuel clad temperature limits from being exceeded.

Basis for proposed no significant hazards consideration determination: As required by 10 CFR 50.91(a), the licensee has provided its analysis of the issue of no significant hazards consideration, which is presented below:

1. The proposed change does not involve a significant increase in the probability or consequences of an accident previously evaluated.

This proposal does not involve an increase in the probability or consequences of an accident previously evaluated. The proposed amendment changes the ''Reactor Steam Dome Pressure-Low'' Allowable Values so to provide further assurance that the Core Spray and RHR systems will perform their LOCA [Loss-of-coolant accident] design basis function.

The functional design basis of the Core Spray and LPCI is to inject water into the reactor vessel to cool the core during a LOCA by opening the Core Spray and LPCI injection valves when reactor pressure drops below the reactor vessel low pressure permissive. The upper analytical limit for the permissive is the Core Spray and LPCI systems' maximum design pressure, and the lower analytical limit is the lowest pressure which allows injection to prevent exceeding the fuel cladding temperature limit. The new allowable values were selected to lie within the upper and lower limits to ensure there will be no change in the required logic or functions of the Core Spray and LPCI systems. These new values do not affect the LOCA or its ''limiting fault'' frequency of occurrence and do not introduce any new accidents or malfunctions of equipment important to safety. Since they do not affect the LOCA, they do not change the probability of occurrence of the LOCA. The new allowable values do not change the logic or function of the reactor vessel low pressure permissive. These new values simply provide the basis for which the associated pressure

instruments are to be set to ensure proper operation of Core Spray and LPCI within the design pressures as described above. Therefore, the change in allowable values does not increase the probability of occurrence or the consequences of an accident or malfunction of equipment important to safety.

Based upon the analysis presented above, PP&L [PP&L, Inc.] concludes that the proposed action does not involve an increase in the probability or consequences of an accident previously evaluated.

2. The proposed change does not create the possibility of a new or different kind of accident from any accident previously evaluated.

This proposal does not create the probability of a new or different type of accident from any accident previously evaluated. The new allowable values do not change any plant systems, structures, or components, nor do they change any existing or create any new Core Spray and LPCI logic or functions. The new allowable values were selected to ensure the required operation of the Core Spray and LPCI systems within the design pressures described above.

Therefore, the proposed change does not create the possibility of a new or different kind of accident from any accident previously evaluated.

3. The proposed change does not involve a significant reduction in the margin of safety.

The change does not involve a reduction in the margin of safety. Technical Specification Bases Section B3.3.5.1 9 (ECCS Instrumentation) identifies that the low reactor steam dome pressure signals are used as permissives for operation of the low pressure ECCS subsystems. The new allowable values were selected so to not impact the logic, redundancy, operability or surveillance requirements for these subsystems. The new allowable values maintain the margin requirements that the Core Spray and LPCI system pressures such that they do not exceed their system maximum design pressures and that system pressures are high enough to ensure that the ECCS injection prevents the fuel peak cladding temperature from exceeding the limits of 10CFR50.46.

The margin of safety is unaffected by the proposed changes.

The NRC staff has reviewed the licensee's analysis and, based on this review, it appears that the three standards of 10 CFR 50.92(C) are satisfied. Therefore, the NRC staff proposed to determine that the amendment request involves no significant hazards consideration.

Local Public Document Room location: Osterhout Free Library, Reference Department, 71 South Franklin Street, Wilkes-Barre, PA 18701.

Attorney for licensee: Bryan A. Snapp, Esquire, Assoc. General Counsel, PP&L, Inc., 2 North Ninth St., GENTW3, Allentown, PA 18101–1179.

NRC Project Director: Elinor G. Adensam.

PP&L, Inc., Docket No. 50–387, Susquehanna Steam Electric Station, Unit 1, Luzerne County, Pennsylvania

Date of amendment request: March 12, 1999.

Description of amendment request: This proposed amendment would revise the minimum critical power ratio safety limit in Technical Specification (TS) Section 2.1.1.2. Also, the proposed amendment would modify the references in TS Section 5.6.5 in order to include only those references that directly support the generation of the Core Operating Limit and to remove the reference for the Lead Use Assemblies, which will be discharged during the next Unit 1 refueling outage.

Basis for proposed no significant hazards consideration determination: As required by 10 CFR 50.91(a), the licensee has provided its analysis of the issue of no significant hazards consideration, which is presented below:

1. The proposed change does not involve a significant increase in the probability or consequences of an accident previously evaluated.

The applicable sections of the FSAR are Chapters 4.4 and 15. FSAR Chapter 4.4 describes the MCPR Safety Limit, and Chapter 15 describes the transient and accident analyses. The reference to be added to Section 5.6.5 of the Unit 1 Technical Specifications describes a NRC approved critical power correlation for ATRIUM™-10 fuel. This correlation is appropriate for use in conservative methodologies for generating MCPR Safety Limits and MCPR Operating Limits to assure safe operation of Unit 1 with ATRIUM™-10 fuel. A discussion of the impact of the proposed Technical Specification change is provided below.

The proposed change in critical power correlation does not physically affect the plant or its systems. Thus, it does not increase the probability of an accident previously evaluated.

A Unit 1 Cycle 12 MCPR Safety Limit analysis was performed for PP&L by SPC. This analysis used NRC approved methods described in ANF–524(P)(A), Revision 2 and Supplement 1 Revision 2. These methods will be used each cycle to calculate the Unit 1 Safety Limits. For Unit 1 Cycle 12, the critical power performance of the 9×9–2 and ATRIUM™-10 fuel was determined using the NRC approved ANFB and ANFB–10 correlations, respectively. The SAFETY LIMIT MCPR calculations statistically combine uncertainties on feedwater flow, feedwater temperature, core flow, core pressure, core power distribution, and uncertainties in the Critical Power Correlation. The SPC analysis used cycle specific power distributions and calculated MCPR values such that at least 99.9% of the fuel rods are expected to avoid boiling transition during normal operation or anticipated operational occurrences. The resulting two-loop and single-loop MCPR Safety Limits are included in the proposed Technical Specification change. Thus, the cladding integrity and its ability to contain fission products are not adversely affected.

Analyses of the Single Loop Pump Seizure accident with the NRC approved ANFB–10 correlation for ATRIUM™-10 fuel (Reference 1) will be performed to demonstrate that the NRC acceptance criterion (i.e., small fraction of 10CFR100 dose limits) is met. Analyses will also be performed to validate the conclusion that two-loop transients are more severe than those events analyzed in single-loop operation.

Changes to Section 2.1.1.2 reflect the change from a flow dependent MCPR Safety Limit to a single value MCPR Safety Limit for two-loop operation and single-loop operation.

Changes to Reference 5.6.5 delete the methodology used for critical power analyses for ATRIUM™-10 fuel and add the NRC approved ANFB–10 methodology to the list of approved methodologies. Other changes in Reference 5.6.5 are administrative in nature because they delete references not directly related to the generation of Core Operating Limits. No new analysis approaches are used due to these changes.

Changes to BASES Sections 2.1.1 and 3.2.2 reflect the inclusion of the ANFB–10 critical power correlation. The range of the applicability of the ANFB–10 is valid for pressures > 571 psia and bundle mass fluxes > 0.115×10^6 lb/hr-ft^2. These values assure that a valid CPR calculation will result at or above 25% of rated core thermal power, that is, reactor steam dome pressure ≥ 785 psig and core flow ≥ 10 Mlbm/hr.

Changes to BASES Sections 3.2.1, 3.2.2, 3.2.3, and 3.2.4 reflect the removal of Reference 7 for the ABB LUAs, since the four LUAs will be discharged from Unit 1 during the Unit 1 11th Refueling and Inspection Outage.

The consequences of transients and accidents will remain within the criteria approved by the NRC. The methodology used to perform the analyses has been previously approved by the NRC. Thus, analysis results using the new methodology will continue to provide assurance that the reactor will perform its design safety function during normal operation and design basis events. Therefore, the proposed action does not involve an increase in the probability or consequences of an accident previously evaluated.

2. The proposed change does not create the possibility of a new or different kind of accident from any accident previously evaluated.

The proposed changes to the Unit 1 Technical Specifications (MCPR Safety Limits, removal of methodology references not directly supporting the generation of Core Operating Limits, removal of the two references describing previously approved methodology for applying ANFB to ATRIUM™-10 fuel, removal of the ABB LUA reference, and inclusion of the ANFB–10 correlation reference) do not require any physical plant modifications, physically affect any plant components, or entail changes in plant operation. Removal of the Unit 1 Cycle 11 footnote allows Unit 1 Cycle 12 and future cycle operation with NRC

approved methodology. Thus, the proposed change does not create the possibility of a previously unevaluated operator error or a new single failure. The consequences of transients and accidents will remain within the criteria approved by the NRC. Therefore, the proposed change does not create the possibility of a new or different kind of accident from any accident previously evaluated.

3. The proposed change does not involve a significant reduction in a margin of safety.

The applicable Technical Specification Sections include 2.1.1.2 and 5.6.5.

The changes to the Unit 1 Technical Specifications discussed in Item 1 above do not require any physical plant modifications, physically affect any plant components, or entail changes in plant operation. Therefore, the proposed change will not jeopardize or degrade the function or operation of any plant system or component governed by Technical Specifications. The consequences of transients and accidents will remain within the criteria approved by the NRC. The proposed MCPR Safety Limits and use of the ANFB–10 critical power correlation described in the reference added to Section 5.6.5 do not involve a significant reduction in the margin of safety as currently defined in the Bases of the applicable Technical Specification sections.

Therefore, the proposed change does not involve a significant reduction in the margin of safety.

The NRC staff has reviewed the licensee's analysis and, based on this review, it appears that the three standards of 10 CFR 50.92(c) are satisfied. Therefore, the NRC staff proposes to determine that the amendment request involves no significant hazards consideration.

Local Public Document Room location: Osterhout Free Library, Reference Department, 71 South Franklin Street, Wilkes-Barre, PA 18701.

Attorney for licensee: Bryan A. Snapp, Esquire, PP&L, Inc., 2 North Ninth St., Allentown, PA 18101.

NRC Project Director: Elinor G. Adensam.

STP Nuclear Operating Company, Docket Nos. 50–498 and 50–499, South Texas Project, Units 1 and 2, Matagorda County, Texas

Date of amendment request: March 2, 1999.

Description of amendment request: The proposed amendment would clarify the use of a ''check valve with flow through the valve secured'' as a means to isolate an affected containment penetration (i.e., a penetration with an inoperable penetration barrier) in Technical Specification 3.6.3 Action b.

Basis for proposed no significant hazards consideration determination: As required by 10 CFR 50.91(a), the licensee has provided its analysis of the issue of no significant hazards consideration, which is presented below:

1. Does the change involve a significant increase in the probability or consequences of an accident previously evaluated?

The proposed change does not involve an increase in the probability or consequences of an accident previously evaluated. The proposed change does not involve any hardware changes. The proposed change will clarify Technical Specification 3.6.3 Action b to allow the use of a check valve with the flow through the valve secured as a means to isolate an inoperable containment penetration. This change is consistent with the changes identified in NUREG–1431, ''Improved Standard Technical Specifications for Westinghouse Plants'', Specification 3.6.3 (Containment Isolation Valves), which identifies check valves with flow through the valve secured as a type of deactivated automatic valve, and with 10 CFR 50 Appendix A General Design Criteria 55 and 56, which include the use of check valves as ''automatic isolation valves''. The proposed change will not affect the containment isolation valve OPERABILITY requirements or associated isolation time limits established in the Specifications. Therefore the proposed change will not affect any safety margin or safety limit applicable to the facility. Therefore no increase in the probability or consequences of any accident previously evaluated will occur.

2. Does the change create the possibility of a new or different kind of accident from any accident previously evaluated?

The proposed change will clarify Technical Specification 3.6.3 Action b to allow the use of a check valve with the flow through the valve secured as a means to isolate an inoperable containment penetration. The proposed change will not involve any physical change to plant systems, structures, or components (SSC). This change is consistent with the changes identified in NUREG–1431, ''Improved Standard Technical Specifications for Westinghouse Plants'', Specification 3.6.3 (Containment Isolation Valves), which identifies check valves with flow through the valve secured as a type of deactivated automatic valve, and with 10 CFR 50 Appendix A General Design Criteria 55 and 56, which include the use of check valves as ''automatic isolation valves''. The proposed change only provides clarification to the existing Specification 3.6.3, and will not affect the established containment isolation valve OPERABILITY requirements or associated isolation time limits. Since the proposed change does not impact operation of the facility as presently approved, no possibility exists for a new or different kind of accident from those previously evaluated.

3. Does this change involve a significant reduction in a margin of safety?

The proposed change will clarify Technical Specification 3.6.3 Action b to allow the use of a check valve with the flow through the valve secured as a means to isolate an inoperable containment penetration. This change is consistent with the changes identified in NUREG–1431, ''Improved Standard Technical Specifications for Westinghouse Plants'', Specification 3.6.3 (Containment Isolation Valves), which identifies check valves with flow through the valve secured as a type of deactivated automatic valve, and with 10 CFR 50 Appendix A General Design Criteria 55 and 56, which include the use of check valves as ''automatic isolation valves''. The proposed change only provides clarification to the existing Specification 3.6.3, and will not affect the established containment isolation valve OPERABILITY requirements or associated isolation time limits. The proposed change does not involve a significant reduction in a margin of safety because the ability to isolate containment in the event of a release of radioactive material to the containment atmosphere or pressurization of the containment will be maintained. The margin of safety is defined by the established containment isolation valve OPERABILITY requirements and associated isolation time limits. The proposed change does not alter these operating restrictions and the margin of safety which assures the ability to isolate containment is not affected.

The NRC staff has reviewed the licensee's analysis and, based on this review, it appears that the standards of 10 CFR 50.92(c) are satisfied. Therefore, the NRC staff proposes to determine that the request for amendments involves no significant hazards consideration.

Local Public Document Room location: Wharton County Junior College, J. M. Hodges Learning Center, 911 Boling Highway, Wharton, Texas 77488.

Attorney for licensee: Jack R. Newman, Esq., Morgan, Lewis & Bockius, 1800 M Street, NW., Washington, DC 20036–5869.

NRC Project Director: George Dick, Acting.

STP Nuclear Operating Company, Docket Nos. 50–498 and 50–499, South Texas Project, Units 1 and 2, Matagorda County, Texas

Date of amendment request: March 9, 1999.

Description of amendment request: The amendment request proposes that reference to the Independent Safety Engineering Group be removed from Technical Specification requirements, with supporting changes to the Operations Quality Assurance Plan.

Basis for proposed no significant hazards consideration determination: As required by 10 CFR 50.91(a), the licensee has provided its analysis of the issue of no significant hazards consideration, which is presented below:

The proposed change does not involve a significant increase in the probability or consequences of an accident previously evaluated.

The proposed amendment is a programmatic and administrative change that

does not physically alter safety-related systems, nor does it affect the way in which safety-related systems perform their functions. The functions assigned to the Independent Safety Engineering Group are addressed by other organizations. Because the design of the facility and system operating parameters are not being changed, the proposed amendment does not involve an increase in the probability or consequences of any accident previously evaluated.

The proposed amendment does not create the possibility of a new or different kind of accident from any accident previously evaluated.

The proposed amendment is a programmatic and administrative change that does not physically alter safety-related systems, nor does it affect the way in which safety-related systems perform their functions. The functions assigned to the Independent Safety Engineering Group are addressed by other organizations. Because the design of the facility and system operating parameters are not being changed, the proposed amendment does not create the possibility of a new or different kind of accident previously evaluated.

The proposed change does not involve a significant reduction in a margin of safety.

The proposed amendment is a programmatic and administrative change that provides assurance that plant operations continue to be conducted in a safe manner. The functions assigned to the Independent Safety Engineering Group are addressed by other organizations. As stated above the proposed amendment does not physically alter safety-related systems, nor does it affect the way in which safety-related systems perform their functions. Because the design of the facility and system operating parameters are not being changed, the proposed amendment does not involve a significant reduction in the margin of safety.

The NRC staff has reviewed the licensee's analysis and, based on this review, it appears that the standards of 10 CFR 50.92(c) are satisfied. Therefore, the NRC staff proposes to determine that the request for amendments involves no significant hazards consideration.

Local Public Document Room location: Wharton County Junior College, J. M. Hodges Learning Center, 911 Boling Highway, Wharton, Texas 77488.

Attorney for licensee: Jack R. Newman, Esq., Morgan, Lewis & Bockius, 1800 M Street, NW., Washington, DC 20036–5869.

NRC Project Director: George F. Dick, Acting.

STP Nuclear Operating Company, Docket Nos. 50–498 and 50–499, South Texas Project, Units 1 and 2, Matagorda County, Texas

Date of amendment request: March 15, 1999 (Supplement to October 29, 1998).

Description of amendment request: The proposed amendments were submitted by application dated October 29, 1998, to relocate Technical Specification (TS) 3/4.7.9 requirements for snubbers to the Technical Requirements Manual. The Commission issued a Notice of Consideration of Issuance of Amendments regarding its proposed no significant hazards consideration determination that was published in the **Federal Register** on December 16, 1998 (63 FR 69346).

Subsequently, by letter dated March 15, 1999, supplemental information was submitted to include TS 6.10.3.l to be relocated to the Technical Requirements Manual. This information is being noticed to provide for public comment on the issue of no significant hazards consideration.

Basis for proposed no significant hazards consideration determination: As required by 10 CFR 50.91(a), the licensee has provided its analysis of the issue of no significant hazards consideration, which is presented below:

1. Does the change involve a significant increase in the probability or consequences of an accident previously evaluated?

The supplement to the amendment request relocates the record keeping requirements of Technical Specification 6.10.3.l to the Technical Requirements Manual. The change does not involve a physical alteration of the plant (no new or different type of equipment will be installed) or make changes in the methods governing normal plant operation. The change will not impose different requirements, and adequate control of information will be maintained. This change will not alter assumptions made in the safety analysis and licensing basis.

The Technical Requirements Manual is incorporated in the South Texas Project Updated Final Safety Analysis Report and will be maintained pursuant to 10 CFR 50.59. In addition, snubber operability is addressed in existing surveillance procedures that are also controlled by 10 CFR 50.59 and subject to the change control provisions imposed by plant administrative procedures, which endorse applicable regulations and standards.

Therefore, the supplement to the proposed change does not involve a significant increase in the probability or consequences of an accident previously evaluated.

2. Does the change create the possibility of a new or different kind of accident from any accident previously evaluated?

The supplement to the amendment request relocates the record keeping requirements of Technical Specification 6.10.3.l to the Technical Requirements Manual. The change does not involve a physical alteration of the plant (no new or different type of equipment will be installed) or make changes in the methods governing normal plant operation. The change will not impose different requirements, and adequate control of information will be maintained. This change will not alter assumptions made in the safety analysis and licensing basis.

The Technical Requirements Manual is incorporated in the South Texas Project Updated Final Safety Analysis Report and will be maintained pursuant to 10 CFR 50.59. In addition, snubber operability is addressed in existing surveillance procedures that are also controlled by 10CFR50.59 and subject to the change control provisions imposed by plant administrative procedures, which endorse applicable regulations and standards.

Therefore, the change does not create the possibility of a new or different kind of accident from any accident previously evaluated.

3. Does the change involve a significant reduction in a margin of safety?

The supplement to the amendment request relocates the record keeping requirements of Technical Specification 6.10.3.l to the Technical Requirements Manual. The relocated requirements remain the same as the existing Technical Specifications. The change will not reduce a margin of safety because it has no impact on any safety analysis assumptions. Future changes to the relocated requirements will be evaluated per the requirements of 10CFR50.59.

Therefore, the supplement will not result in a reduction in a margin of safety.

The NRC staff has reviewed the licensee's analysis and, based on this review, it appears that the standards of 10 CFR 50.92(c) are satisfied. Therefore, the NRC staff proposes to determine that the request for amendments involves no significant hazards consideration.

Local Public Document Room location: Wharton County Junior College, J. M. Hodges Learning Center, 911 Boling Highway, Wharton, Texas 77488.

Attorney for licensee: Jack R. Newman, Esq., Morgan, Lewis & Bockius, 1800 M Street, NW., Washington, DC 20036–5869.

NRC Project Director: George F. Dick, Acting.

Wisconsin Public Service Corporation, Docket No. 50–305, Kewaunee Nuclear Power Plant, Kewaunee County, Wisconsin

Date of amendment request: February 15, 1999.

Description of amendment request: The proposed amendment would revise requirements of Technical Specifications Section 6, ''Administrative Controls,'' related to (1) plant manager's responsibilities, (2) plant staff titles and organization, (3) offsite and onsite review committee (4) reportable events, and (5) actions required in event of a safety limit violation.

Basis for proposed no significant hazards consideration determination: As required by 10 CFR 50.91(a), the licensee has provided its analysis of the issue of no significant hazards

consideration, which is presented below:

The proposed amendment will not change the intent of the TS or decrease WPSC's management support or involvement in activities at the Kewaunee Plant. Furthermore, it will not result in a decrease in the engineering or technical support supplied by the plant staff or the corporate support staff. The proposed changes are administrative in nature. They primarily involve the relocation of existing requirements to owner controlled documents; therefore, there are no significant hazards associated with this change. As an administrative change this will not result in a significant increase in the probability of occurrence or consequences of an accident. As an administrative change this will not create the possibility of a new or different kind of accident from any previously analyzed. This administrative change relocates existing requirements, and therefore, will not involve a significant decrease in the margin of safety.

In addition, the staff analyzed the proposed changes in accordance with the provisions of 10 CFR 50.92. The proposed change will not:

1. Involve a significant increase in the probability or consequence of an accident previously evaluated.

The analyses for the previously evaluated accidents are presented in Chapter 14 of the Updated Safety Analysis Report. There are 19 postulated accidents addressed therein. The proposed amendment would not affect the safety analysis assumptions or analytical models used for any of these analyses. Also, the calculated dose consequences for analyzed accidents would be unaffected. Therefore the proposed changes do not involve a significant increase in the probability or consequence of an accident previously evaluated.

2. Create the possibility of a new or different kind of accident from any previously evaluated.

The proposed accident does not involve any physical change to the design of the physicality, or operation of the facility outside the bounds of the existing analyses. Thus, there is no possibility of creating a new or different kind of accident.

3. Involve a significant reduction in the margin of safety.

The proposed changes do not involve any physical changes to any of the fission product barriers or to the design or operation of any safety systems. Also, no safety limits, limiting safety systems settings, limiting conditions for operation or testing requirements would be affected. Therefore, the proposed changes do not involve a significant reduction in the margin of safety.

Based on this review, it appears that the three standards of 10 CFR 50.92(c) are satisfied. Therefore, the NRC staff proposes to determine that the amendment request involves no significant hazards consideration.

Local Public Document Room location: University of Wisconsin, Cofrin Library, 2420 Nicolet Drive, Green Bay, WI 54311–7001.

Attorney for licensee: Bradley D. Jackson, Esq., Foley and Lardner, P.O. Box 1497, Madison, WI 53701–1497.

NRC Project Director: Cynthia A. Carpenter.

Yankee Atomic Electric Company, Docket No. 50–29, Yankee Nuclear Power Station, Franklin County, Massachusetts

Date of amendment request: March 17, 1999.

Description of amendment request: Licensee submitted a License Amendment request to delete administrative Technical Specification (TS) requirements related to overtime restrictions. The licensee stated it will provide appropriate constraints on excessive overtime in its Administrative Procedures.

Basis for proposed no significant hazards consideration determination: As required by 10 CFR 50.91(a), the licensee has provided its analysis of the issue of no significant hazards consideration, which is presented below:

The proposed changes are administrative in nature and simply eliminate outdated requirements from the YNPS Technical Specifications. As such the changes will not:

1. Involve a significant increase in the probability or consequences of an accident previously evaluated. The administrative nature of the changes will not affect safety-related systems or components or their mode of operation and therefore, will not involve a significant increase in the probability or consequences of an accident previously evaluated.

2. Create the possibility of a new or different accident from any previously evaluated. The proposed changes do not modify any plant systems or components and, therefore, do not create the possibility of a new or different accident from any previously evaluated.

3. Involve a significant reduction in the margin of safety. The changes are administrative in nature involving the deletion of outdated requirements in the technical specifications; therefore, there will be no reduction in the margin of safety.

Based on the considerations noted above, it is concluded that the proposed changes will not endanger the public health and safety.

The NRC staff has reviewed the licensee's analysis and, based on this review, it appears that the three standards of 10 CFR 50.92(c) are satisfied. Therefore, the NRC staff proposes to determine that the amendment request involves no significant hazards consideration.

Local Public Document Room location: Greenfield Community College, 1 College Drive, Greenfield, Massachusetts 01301.

Attorney for licensee: Thomas Dignan, Esquire, Ropes and Gray, One International Place, Boston, Massachusetts 02110–2624.

NRC Project Director: Seymour H. Weiss.

Yankee Atomic Electric Company, Docket No. 50–29, Yankee Nuclear Power Station, Franklin County, Massachusetts

Date of amendment request: March 17, 1999.

Description of amendment request: Licensee submitted a License Amendment request to transfer Technical Specification Sections 6.7—Procedures and Programs and 6.9—Record Retention to the Yankee Decommissioning Quality Assurance Program (YDQAP).

Basis for proposed no significant hazards consideration determination: As required by 10 CFR 50.91(a), the licensee has provided its analysis of the issue of no significant hazards consideration, which is presented below:

The proposed changes are administrative in nature. Administrative requirements in Sections 6.7 and 6.9 of the YNPS Technical Specifications are to be transferred to the YDQAP which is the current location of related administrative requirements. As such the changes will not:

1. Involve a significant increase in the probability or consequences of an accident previously evaluated. The administrative nature of the changes will not affect safety-related systems or components or their mode of operation and therefore, will not involve a significant increase in the probability or consequences of an accident previously evaluated.

2. Create the possibility of a new or different accident from any previously evaluated. The proposed changes do not modify any plant systems or components and, therefore, will not create the possibility of a new or different accident from any previously evaluated.

3. Involve a significant reduction in the margin of safety. The changes are administrative in nature involving the relocation of administrative requirements from one licensing document to another licensing document currently containing related requirements; therefore, there will be no significant reduction in the margin of safety.

Based on the considerations noted above, it is concluded that the proposed changes will not endanger the public health and safety.

The NRC staff has reviewed the licensee's analysis and, based on this

review, it appears that the three standards of 10 CFR 50.92(c) are satisfied. Therefore, the NRC staff proposes to determine that the amendment request involves no significant hazards consideration.

Local Public Document Room location: Greenfield Community College, 1 College Drive, Greenfield, Massachusetts 01301.

Attorney for licensee: Thomas Dignan, Esquire, Ropes and Gray, One International Place, Boston, Massachusetts 02110–2624.

NRC Project Director: Seymour H. Weiss.

Yankee Atomic Electric Company, Docket No. 50–29, Yankee Nuclear Power Station, Franklin County, Massachusetts

Date of amendment request: March 17, 1999.

Description of amendment request: Licensee submitted a License Amendment request to consolidate management positions and to transfer Technical Specification review and audit functions to the Yankee Decommissioning Quality Assurance Program (YDQAP).

Basis for proposed no significant hazards consideration determination: As required by 10 CFR 50.91(a), the licensee has provided its analysis of the issue of no significant hazards consideration, which is presented below:

The proposed changes are administrative in nature and reflect a streamlining of the YAEC/YNPS management structure and procedures consistent with the on-going requirement to complete the remaining scope of YNPS decommissioning safely and efficiently. As such the changes will not:

1. Involve a significant increase in the probability or consequences of an accident previously evaluated. The administrative nature of the changes will not affect safety-related systems or components or their mode of operation and therefore, will not involve a significant increase in the probability or consequences of an accident previously evaluated.

2. Create the possibility of a new or different accident from any previously evaluated. The proposed changes do not modify any plant systems or components and, therefore, will not create the possibility of a new or different accident from any previously evaluated.

3. Involve a significant reduction in the margin of safety. Elimination of the Manager of Operations position and the Plant Superintendent position will not eliminate any of the responsibilities or functions currently assigned to these positions. These responsibilities or functions will be reassigned to an appropriately qualified YAEC/YNPS manager, i.e., the Decommissioning Manager. This change and replacement of the PORC and the NSARC review and audit functions with an independent safety review and an IRAC are consistent with the significant reduction in the scope and the complexity of activities at YNPS as the facility moves into the later stages of the decommissioning effort; therefore, there will be no significant reduction in the margin of safety.

Based on the considerations noted above, it is concluded that the proposed changes will not endanger the public health and safety.

The NRC staff has reviewed the licensee's analysis and, based on this review, it appears that the three standards of 10 CFR 50.92(c) are satisfied. Therefore, the NRC staff proposes to determine that the amendment request involves no significant hazards consideration.

Local Public Document Room location: Greenfield Community College, 1 College Drive, Greenfield, Massachusetts 01301.

Attorney for licensee: Thomas Dignan, Esquire, Ropes and Gray, One International Place, Boston, Massachusetts 02110–2624.

NRC Project Director: Seymour H. Weiss.

Previously Published Notices of Consideration of Issuance of Amendments to Facility Operating Licenses, Proposed No Significant Hazards Consideration Determination, and Opportunity for a Hearing

The following notices were previously published as separate individual notices. The notice content was the same as above. They were published as individual notices either because time did not allow the Commission to wait for this biweekly notice or because the action involved exigent circumstances. They are repeated here because the biweekly notice lists all amendments issued or proposed to be issued involving no significant hazards consideration.

For details, see the individual notice in the **Federal Register** on the day and page cited. This notice does not extend the notice period of the original notice.

Entergy Operations, Inc., Docket No. 50–368, Arkansas Nuclear One, Unit No. 2, Pope County, Arkansas

Date of application for amendment: February 24, 1999.

Brief description of amendment: The amendment would revise Technical Specification Table 3.3–1, ''Reactor Protective Instrumentation,'' Action 2, for Arkansas Nuclear One, Unit No. 2. The proposed change would add a footnote to Action 2 that would allow startup and operation with the functional units associated with the Channel ''D'' ex-core nuclear instrumentation to be maintained in the bypassed or tripped condition following the restart from Refueling Outage 2R13. This footnote is intended to support normal plant operations until such time that the Channel ''D'' ex-core detector assembly can be restored to an operable status.

Date of publication of individual notice in **Federal Register**: March 8, 1999 (64 FR 11067).

Expiration date of individual notice: April 7, 1999.

Local Public Document Room location: Tomlinson Library, Arkansas Tech University, Russellville, AR 72801.

Notice of Issuance of Amendments to Facility Operating Licenses

During the period since publication of the last biweekly notice, the Commission has issued the following amendments. The Commission has determined for each of these amendments that the application complies with the standards and requirements of the Atomic Energy Act of 1954, as amended (the Act), and the Commission's rules and regulations. The Commission has made appropriate findings as required by the Act and the Commission's rules and regulations in 10 CFR Chapter I, which are set forth in the license amendment.

Notice of Consideration of Issuance of Amendment to Facility Operating License, Proposed No Significant Hazards Consideration Determination, and Opportunity for A Hearing in connection with these actions was published in the **Federal Register** as indicated.

Unless otherwise indicated, the Commission has determined that these amendments satisfy the criteria for categorical exclusion in accordance with 10 CFR 51.22. Therefore, pursuant to 10 CFR 51.22(b), no environmental impact statement or environmental assessment need be prepared for these amendments. If the Commission has prepared an environmental assessment under the special circumstances provision in 10 CFR 51.12(b) and has made a determination based on that assessment, it is so indicated.

For further details with respect to the action see (1) the applications for amendment, (2) the amendment, and (3) the Commission's related letter, Safety Evaluation and/or Environmental Assessment as indicated. All of these items are available for public inspection at the Commission's Public Document Room, the Gelman Building, 2120 L Street, NW., Washington, DC, and at the local public document rooms for the particular facilities involved.

CBS Corporation, Docket No. 50–22, Westinghouse Test Reactor, Waltz Mill, Pennsylvania

Date of application for amendment: September 28, 1998 supplemented on November 17, 1998.

Brief description of amendment: This amendment changes the license to reflect the new legal name of the licensee for the Westinghouse Test Reactor to CBS Corporation.

Date of issuance: March 25, 1999.

Effective Date: March 25, 1999.

Amendment No: 9.

Facility License No. TR–2: This amendment changes the license.

Date of initial notice in **Federal Register**: December 16, 1998, (63 FR 69334).

The Commission has issued a Safety Evaluation for this amendment dated March 25, 1999.

No significant hazards consideration comments received: No.

Local Public Document: N/A.

Commonwealth Edison Company, Docket Nos. 50–237 and 50–249, Dresden Nuclear Power Station, Units 2 and 3, Grundy County, Illinois

Docket Nos. 50–254 and 50–265, Quad Cities Nuclear Power Station, Units 1 and 2, Rock Island County, Illinois

Docket Nos. 50–373 and 50–374, LaSalle County Station, Units 1 and 2, LaSalle County, Illinois

Date of application for amendments: December 17, 1998.

Brief description of amendments: The amendments revised the respective facility Technical Specifications (TS) by adding a new Limiting Condition for Operations that provided an administrative enhancement by allowing testing required to return equipment to service to be conducted under administrative controls.

Date of issuance: March 16, 1999.

Effective date: Immediately, to be implemented within 60 days.

Amendment Nos.: 172, 167; 184, 181; 132, 117.

Facility Operating License Nos. DPR–19, DPR–25, DPR–29, DPR–30, NPF–11 and NPF–18.

The amendments revised the Technical Specifications.

Date of initial notice in **Federal Register**: January 27, 1999 (64 FR 4153) The Commission's related evaluation of the amendments is contained in a Safety Evaluation dated March 16, 1999.

No significant hazards consideration comments received: No.

Local Public Document Room location: for Dresden, Morris Area Public Library District, 604 Liberty Street, Morris, Illinois 60450; for Quad Cities, Dixon Public Library, 221 Hennepin Avenue, Dixon, Illinois 61021; for LaSalle, the Jacobs Memorial Library, 815 North Orlando Smith Avenue, Illinois Valley Community College, Oglesby, Illinois 61348–9692.

Commonwealth Edison Company, Docket Nos. 50–373 and 50–374, LaSalle County Station, Units 1 and 2, LaSalle County, Illinois

Date of application for amendments: August 14, 1998, as supplemented on October 13 and December 23, 1998.

Brief description of amendments: The amendments revised the Technical Specifications (TSs) to reflect the use of Siemens Power Corporation (SPC) ATRIUM–9B fuel. Specifically, the amendments incorporate the following into the TSs: (1) new methodologies that will enhance operational flexibility and reduce the likelihood of future plant derates; (2) administrative changes that adopt Improved Standard Technical Specification (iSTS) language where appropriate; and (3) changes to the Minimum Critical Power Ratio.

Date of issuance: March 16, 1999.

Effective date: Immediately, to be implemented prior to startup of Cycle 9 for Unit 1 and prior to startup of Cycle 8 for Unit 2.

Amendment Nos.: 131, 116.

Facility Operating License Nos. NPF–11 and NPF–18: The amendments revised the TSs.

Date of initial notice in **Federal Register**: November 4, 1998 (63 FR 59588). The December 23, 1998, submittal provided additional clarifying information that did not change the initial proposed no significant hazards consideration determination. The Commission's related evaluation of the amendments is contained in a Safety Evaluation dated March 16, 1999.

No significant hazards consideration comments received: No.

Local Public Document Room location: Jacobs Memorial Library, 815 North Orlando Smith Avenue, Illinois Valley Community College, Oglesby, Illinois 61348–9692.

Commonwealth Edison Company, Docket Nos. 50–254 and 50–265, Quad Cities Nuclear Power Station, Units 1 and 2, Rock Island County, Illinois

Date of application for amendments: August 14, 1998, as supplemented by letters dated October 13, 1998, and December 23, 1998.

Brief description of amendments: The amendments changed the Quad Cities Technical Specifications (TS) to reflect the use of Siemens Power Corporation (SPC) ATRIUM–9B fuel. Specifically, the amendments incorporate the following into the TS: (a) new methodologies that will enhance operational flexibility and reduce the likelihood of future plant derates; (b) administrative changes that eliminate the cycle-specific implementation of ATRIUM–9B fuel and adopt Improved Standard Technical Specification language where appropriate; and (c) changes to the Minimum Critical Power Ratio (MCPR).

The amendment for Unit 1 also reflects the removal of Unit 1 specific pages incorporated into Unit 1 TS by Amendment No. 182 and are no longer applicable. The August 14, 1998, application superseded an August 29, 1997, application in its entirety (63 FR 2274).

Date of issuance: March 17, 1999.

Effective date: Immediately, to be implemented within 60 days.

Amendment Nos.: 185 & 182.

Facility Operating License Nos. DPR–29, DPR–30: The amendments revised the Technical Specifications.

Date of initial notice in **Federal Register**: September 9, 1998 (63 FR 48258) and November 4, 1998 (63 FR 59588). The October 13, 1998, submittal changed a reference to a recently NRC-approved additive constant uncertainty (ACU) generic methodology for ATRIUM–9B fuel (ANF–1125 (P)(A), supplement 1, Appendix E) from Appendix D which provided an interim value for ACU. This change was noticed on November 4, 1998 (63 FR 48258). The December 23, 1998, submittal provided additional clarifying information that did not change the initial proposed no significant hazards consideration determination. The Commission's related evaluation of the amendments is contained in a Safety Evaluation dated March 17, 1999.

No significant hazards consideration comments received: No.

Local Public Document Room location: Dixon Public Library, 221 Hennepin Avenue, Dixon, Illinois 61021.

Commonwealth Edison Company, Docket Nos. 50–254 and 50–265, Quad Cities Nuclear Power Station, Units 1 and 2, Rock Island County, Illinois

Date of application for amendments: November 30, 1998.

Brief description of amendments: The amendments changed the technical specifications (TSs) by decreasing the Allowed Outage Time (AOT) from 67 days to 14 days for the Safe Shutdown Makeup Pump (SSMP).

Date of issuance: March 26, 1999.

Effective date: Immediately, to be implemented within 60 days.

Amendment Nos.: 186 & 183.

Facility Operating License Nos. DPR–29 and DPR–30: The amendments revised the Technical Specifications.

Date of initial notice in **Federal Register**: January 13, 1999 (64 FR 2246).

The Commission's related evaluation of the amendments is contained in a Safety Evaluation dated March 26, 1999.

No significant hazards consideration comments received: No.

Local Public Document Room location: Dixon Public Library, 221 Hennepin Avenue, Dixon, Illinois 61021.

Duke Energy Corporation, Docket Nos. 50–269, 50–270, and 50–287, Oconee Nuclear Station, Units 1, 2, and 3, Oconee County, South Carolina.

Date of application of amendments: September 30, 1998.

Brief description of amendments: The amendments increase the maximum fuel rod internal pressure in the spent fuel pool from 1200 pounds per square inch gauge (psig) to 1300 psig by changing the Updated Final Analysis Report (UFSAR) reference to the computer code used to determine the fuel rod internal pressure (TACO3 computer code would be added) in UFSAR Chapter 15. In addition, the amendments justify not increasing the overall effective decontamination factor for iodine as a consequence of a fuel handling accident and change the terminology used in the UFSAR from ''fuel assembly gap gas pressure'' to ''fuel rod internal pressure.''

Date of Issuance: March 26, 1999.

Effective date: As of the date of issuance and shall be implemented within 30 days from the date of issuance.

Amendment Nos.: Unit 1–301; Unit 2–301; Unit 3–301.

Facility Operating License Nos. DPR–38, DPR–47, and DPR–55: Amendments authorized change(s) to the FSAR.

Date of initial notice in **Federal Register**: November 4, 1998 (63 FR 59590).

The Commission's related evaluation of the amendments is contained in a Safety Evaluation dated March 26, 1999.

No significant hazards consideration comments received: No.

Local Public Document Room location: Oconee County Library, 501 West South Broad Street, Walhalla, South Carolina.

Entergy Operations, Inc., Docket No. 50–368, Arkansas Nuclear One, Unit No. 2, Pope County, Arkansas.

Date of application for amendment: February 25, 1999.

Brief description of amendment: This amendment revises Technical Specification (TS) Table 3.3–1, ''Reactor Protective Instrumentation,'' Action 2, for Arkansas Nuclear One, Unit No. 2 (ANO–2). This change adds a footnote to Action 2 that allows startup and operation with the functional units associated with the Channel ''D'' ex-core nuclear instrumentation to be maintained in the bypassed or tripped condition following the restart from Refueling Outage 2R13. This footnote is intended to support normal plant operations until such time that the Channel ''D'' ex-core detector assembly can be restored to an operable status. This footnote will be in effect for a time period not to extend beyond Mid-Cycle Outage 2P99, which is the next planned entry into cold shutdown conditions for ANO–2. A Notice of Enforcement Discretion (NOED) related to TS Table 3.3–1, Action 2, was issued verbally on February 23, 1999. The NOED is documented in a letter dated February 25, 1999.

Date of issuance: March 23, 1999.

Effective date: As of the date of issuance.

Amendment No.: 202.

Facility Operating License No. NPF–6: Amendment revised the Technical Specifications.

Public comments requested as to proposed no significant hazards consideration (NSHC): Yes (64 FR 11067 dated March 8, 1999). The notice provided an opportunity to submit comments on the Commission's proposed NSHC determination. No comments have been received. The notice also provided for an opportunity to request a hearing by April 7, 1999, but indicated that if the Commission makes a final NSHC determination, any such hearing would take place after issuance of the amendment.

The Commission's related evaluation of the amendment, finding of exigent circumstances, and final NSHC determination are contained in a Safety Evaluation dated March 23, 1999.

Attorney for Licensee: Nicholas S. Reynolds, Esquire, Winston and Strawn, 1400 L Street, NW., Washington DC 20005–3502.

Local Public Document Room location: Tomlinson Library, Arkansas Tech University, Russellville, Arkansas 72801.

FirstEnergy Nuclear Operating Company, Docket No. 50–440, Perry Nuclear Power Plant, Unit 1, Lake County, Ohio.

Date of application for amendment: November 2, 1995, and as supplemented by submittal dated January 7, 1999.

Brief description of amendment: This amendment revises technical specification requirements for handling irradiated fuel in the Primary Containment and the Fuel Handling Building, and selected specifications associated with performing core alterations.

Date of issuance: March 11, 1999.

Effective date: March 11, 1999.

Amendment No.: 102.

Facility Operating License No. NPF–58: This amendment revised the Technical Specifications.

Date of initial notice in **Federal Register**: December 6, 1995 (60 FR 62497).

The supplemental information contained clarifying information and did not change the initial no significant hazards consideration determination and did not change the scope of the original application.

The Commission's related evaluation of the amendment is contained in a Safety Evaluation dated March 11, 1999.

No significant hazards consideration comments received: No.

Local Public Document Room location: Perry Public Library, 3753 Main Street, Perry, OH 44081.

FirstEnergy Nuclear Operating Company, Docket No. 50–440, Perry Nuclear Power Plant, Unit 1, Lake County, Ohio.

Date of application for amendment: August 27, 1996, as supplemented by submittals dated April 9, 1997, July 22, 1998, December 3, 1998, and January 18, 1999.

Brief description of amendment: This amendment revised Technical Specification 3.6.1.3, ''Primary Containment Isolation Valves (PCIVs),'' and 3.6.1.9, ''Main Steam Isolation Valve (MSIV) Leakage Control System (LCS).'' The amendment reflects implementation of the revised accident source term in NUREG–1465, ''Accident Source Terms for Light-Water Nuclear Power Plants'' and permits the licensee to eliminate the MSIV LCS and increase the allowable leak rates of the MSIVs.

Date of issuance: March 26, 1999:

Effective date: March 26, 1999.

Amendment No.: 103.

Facility Operating License No. NPF–58: This amendment revised the Technical Specifications.

Date of initial notice in **Federal Register**: October 7, 1998 (63 FR 53958).

The supplemental information contained clarifying information and did not change the initial no significant hazards consideration determination and did not expand the scope of the original application.

The Commission's related evaluation of the amendment is contained in a Safety Evaluation dated March 26, 1999.

No significant hazards consideration comments received: No.

Local Public Document Room location: Perry Public Library, 3753 Main Street, Perry, OH 44081.

FirstEnergy Nuclear Operating Company, Docket No. 50–440, Perry Nuclear Power Plant, Unit 1, Lake County, Ohio.

Date of application for amendment: October 27, 1998.

Brief description of amendment: This amendment revised the minimum critical power ratio (MCPR) safety limit contained in TS 2.1.1.2. In addition, the amendment removes a note to TS 2.1.1.2 and a footnote to TS 5.6.5.b that references MCPR safety limit values as cycle specific.

Date of issuance: March 26, 1999:

Effective date: March 26, 1999.

Amendment No.: 104.

Facility Operating License No. NPF–58: This amendment revised the Technical Specifications.

Date of initial notice in **Federal Register**: December 2, 1998 (63 FR 66603).

The Commission's related evaluation of the amendment is contained in a Safety Evaluation dated March 26, 1999.

No significant hazards consideration comments received: No.

Local Public Document Room location: Perry Public Library, 3753 Main Street, Perry, OH 44081.

FirstEnergy Nuclear Operating Company, Docket No. 50–440, Perry Nuclear Power Plant, Unit 1, Lake County, Ohio.

Date of application for amendment: September 9, 1998, as supplemented by submittals dated January 6, March 4, and March 18, 1999.

Brief description of amendment: This amendment revises the design and licensing basis of containment isolation valves in the feedwater system. The amendment revises (1) Surveillance Requirement 3.6.1.3.11 of Technical Specification (TS) 3.6.1.3, ''Primary Containment Isolation Valves (PCIVs)'' to exclude the feedwater check valves from the hydrostatic test program, (2) TS 5.5.2, ''Primary Coolant Sources Outside Containment,'' to stipulate that water leakage past the feedwater motor-operated containment isolation valves and the reactor water cleanup system return to feedwater line is added to the program, and (3) TS 5.5.12, ''Primary Containment Leakage Rate Testing Program,'' to state that the feedwater check valves will be tested in accordance with the Inservice Testing Program (TS 5.5.6).

Date of issuance: March 26, 1999.

Effective date: March 26, 1999.

Amendment No.: 105.

Facility Operating License No. NPF–58: This amendment revised the Technical Specifications.

Date of initial notice in **Federal Register**: October 21, 1998 (63 FR 56262).

The supplemental information contained clarifying information and did not change the initial no significant hazards consideration determination and did not expand the scope of the original Federal Register notice.

The Commission's related evaluation of the amendment is contained in a Safety Evaluation dated March 26, 1999.

No significant hazards consideration comments received: No.

Local Public Document Room location: Perry Public Library, 3753 Main Street, Perry, OH 44081.

Florida Power and Light Company, et al., Docket Nos. 50–335 and 50–389, St. Lucie Plant, Unit Nos. 1 and 2, St. Lucie County, Florida.

Date of application for amendments: August 24, 1998.

Brief description of amendments: These amendments change the St. Lucie Technical Specifications (TSs) by both removing obsolete license conditions and revising the TSs. The amendments change the TSs to modify the St. Lucie Unit 1 TSs to add components, not previously described in the TSs, to the list of components that comprise an operable control room emergency ventilation system, to modify the Unit 1 and Unit 2 TSs surveillance requirements to clarify component operations, not previously described, that must be verified in response to a containment sump recirculation actuation signal, to delete from the facility operating license No. NPF–16 for Unit 2, license condition 2.C.19 to reflect the completion of the Unit 1 spent fuel pool re-rack and delete license condition 2.I to reflect the resolution of litigation and to modify license condition 2.B.5 to restore the original syntax of the license condition and license condition 2.F to update the references to current license conditions.

Date of Issuance: March 17, 1999.

Effective Date: These amendments shall be implemented within 30 days of receipt.

Amendment Nos.: 160 and 99.

Facility Operating License Nos. DPR–67 and NPF–16: Amendments revised the TSs.

Date of initial notice in **Federal Register**: September 23, 1998 (63 FR 50937).

The Commission's related evaluation of the amendments is contained in a Safety Evaluation dated March 17, 1999.

No significant hazards consideration comments received: No.

Local Public Document Room location: Indian River Junior College Library, 3209 Virginia Avenue, Fort Pierce, Florida 34954–9003.

GPU Nuclear, Inc. et al., Docket No. 50–219, Oyster Creek Nuclear Generating Station, Ocean County, New Jersey.

Date of application for amendment: September 3, 1998.

Brief description of amendment: The amendment revises Technical Specifications 3.4.A.10.e and 3.5.a.2.e to incorporate a Condensate Storage Tank water level of greater than 35 feet.

Date of Issuance: March 17, 1999.

Effective date: March 17, 1999, to be implemented within 30 days

Amendment No.: 204.

Facility Operating License No. DPR–16. Amendment revised the Technical Specifications.

Date of initial notice in **Federal Register**: February 10, 1999 (64 FR 6698).

The Commission's related evaluation of this amendment is contained in a Safety Evaluation dated March 17, 1999.

No significant hazards consideration comments received: No.

Local Public Document Room location: Ocean County Library, Reference Department, 101 Washington Street, Toms River, NJ 08753.

Illinois Power Company, Docket No. 50–461, Clinton Power Station, Unit 1, DeWitt County, Illinois.

Date of application for amendment: January 20, 1999, as supplemented February 4, 8, and 25, and March 5, 1999.

Brief description of amendment: The amendment changes the undervoltage relay setpoints.

Date of issuance: March 26, 1999.

Effective date: March 26, 1999.

Amendment No.: 122.

Facility Operating License No. NPF–62: The amendment revised the Technical Specifications.

Date of initial notice in **Federal Register**: January 28, 1999 (64 FR 4474).

The four supplemental submittals provided additional information and did not change the requested amendment or affect the proposed no significant hazards consideration.

The Commission's related evaluation of the amendment is contained in a Safety Evaluation dated March 26, 1999.

No significant hazards consideration comments received: No.

Local Public Document Room location: The Vespasian Warner Public Library, 120 West Johnson Street, Clinton, IL 61727.

Maine Yankee Atomic Power Company, Docket No. 50–309, Maine Yankee Atomic Power Station, Lincoln County, Maine

Date of application for amendment: April 13, 1998, as supplemented November 5, 1998.

Brief description of amendment: The proposed amendment would revise the Appendix A Technical Specifications to base the Limiting Condition for Operation for the fuel storage pool water level on a revised analysis of the fuel handling accident and a new analysis for radiological shielding during movement of irradiated fuel.

Date of issuance: March 16, 1999.

Effective date: March 16, 1999 (and shall be implemented no later than 30 days).

Amendment No.: 162.

Facility Operating License No. DPR–36: The amendment revised the Technical Specifications.

Date of initial notice in **Federal Register**: May 20, 1998 (63 FR 27763). The November 5, 1998, submittal provided additional clarifying information and did not change the initial proposed no significant hazards determination and did not expand the scope of the original application.

The Commission's related evaluation of the amendment is contained in a Safety Evaluation dated March 16, 1999.

No significant hazards consideration comments received: No.

Local Public Document Room location: Wiscasset Public Library, High Street, P.O. Box 367, Wiscasset, ME 04578.

Niagara Mohawk Power Corporation, Docket No. 50–220, Nine Mile Point Nuclear Station Unit No. 1, Oswego County, New York

Date of application for amendment: December 30, 1998.

Brief description of amendment: The amendment changes Technical Specification (TS) Tables 3.6.14–2 and 4.6.14–2 regarding the noble gas activity monitor channel operability requirement and daily sensor check surveillance requirement to be consistent with the conditions specified in TS 3.1.3.a for operability of the emergency cooling system. Also, this amendment corrects a clerical error in TS 4.6.15.d.

Date of issuance: March 16, 1999.

Effective date: As of the date of issuance to be implemented within 30 days.

Amendment No.: 165.

Facility Operating License No. DPR–63: Amendment revises the Technical Specifications.

Date of initial notice in **Federal Register**: February 10, 1999 (64 FR 6699).

The Commission's related evaluation of the amendment is contained in a Safety Evaluation dated March 16, 1999.

No significant hazards consideration comments received: No.

Local Public Document Room location: Reference and Documents Department, Penfield Library, State University of New York, Oswego, New York 13126.

Niagara Mohawk Power Corporation, Docket No. 50–410, Nine Mile Point Nuclear Station, Unit 2, Oswego County, New York

Date of application for amendment: November 19, 1998.

Brief description of amendment: This amendment changes surveillance frequencies in Technical Specifications 4.8.4.4a and 4.8.4.5a to require testing of the Electrical Protection Assemblies once every 6 months with the plant on-line rather than shut down.

Date of issuance: March 18, 1999.

Effective date: As of the date of issuance to be implemented within 30 days.

Amendment No.: 86.

Facility Operating License No. NPF–69: Amendment revises the Technical Specifications

Date of initial notice in **Federal Register**: December 30, 1998 (63 FR 71970).

The Commission's related evaluation of the amendment is contained in a Safety Evaluation dated March 18, 1999.

No significant hazards consideration comments received: No.

Local Public Document Room location: Reference and Documents Department, Penfield Library, State University of New York, Oswego, New York 13126.

North Atlantic Energy Service Corporation, et al., Docket No. 50–443, Seabrook Station, Unit No. 1, Rockingham County, New Hampshire

Date of amendment request: May 20, 1998, as supplemented by letter dated January 28, 1999.

Description of amendment request: Revise Technical Specifications Table 3.3–4 and associated bases to depict a change to the refueling water storage tank low-low level setpoint

Date of issuance: March 12, 1999.

Effective date: As of its date of issuance, to be implemented within 60 days.

Amendment No.: 60.

Facility Operating License No. NPF–86. Amendment revised the Technical Specifications

Date of initial notice in **Federal Register**: August 12, 1998 (63 FR 43205).

The supplemental letter provided clarifying information and did not change the staff's proposed no significant hazards determination.

The Commission's related evaluation of the amendment is contained in a Safety Evaluation dated March 12, 1999.

No significant hazards consideration comments received: No.

Local Public Document Room location: Exeter Public Library, Founders Park, Exeter, NH 03833.

Northeast Nuclear Energy Company, et al., Docket No. 50–336, Millstone Nuclear Power Station, Unit No. 2, New London County, Connecticut

Date of application for amendment: September 9, 1998, as supplemented February 19 and 26, 1999.

Brief description of amendment: The amendment resolves several previously identified technical specifications (TSs) compliance issues. Specifically, the amendment: (1) changed TS definitions 1.24, ''Core Operating Limits Report,'' 1.27, ''Engineering Safety Feature Response Time,'' and 1.31, ''Radiological Effluent Monitoring and Offsite Dose Calculation Manual (REMODCM)''; (2) changed TS 3.0.2, ''Limiting Condition for Operation,'' by adding a new TS 3.0.6 to the Limiting Condition for Operation TS section; (3) changed TS 4.0.5, ''Surveillance Requirements''; (4) changed the mode applicability of TS 3.2.3, ''Total Unrodded Integrated Radial Peaking—F_r^T''; (5) changed TS 3.3.2.1, ''Engineered Safety Features Actuation System Instrumentation,'' by modifying TS Table 4.3–2 Table Notation (1) which it references; and (6) changed TS 3.4.1.1, ''Reactor Coolant System—Reactor Coolant System Vents.'' The associated TS Bases sections were also changed.

Date of issuance: March 11, 1999.

Effective date: As of the date of issuance to be implemented within 60 days from the date of issuance.

Amendment No.: 230.

Facility Operating License No. DPR–65: Amendment revised the Technical Specifications.

Date of initial notice in **Federal Register**: October 21, 1998 (63 FR 56251).

The supplemental letters provided clarifying information that did not change the original proposed no significant hazards consideration determination or expand the scope of the original **Federal Register** notice.

The Commission's related evaluation of the amendment is contained in a Safety Evaluation dated March 11, 1999.

No significant hazards consideration comments received: No.

Local Public Document Room location: Learning Resources Center, Three Rivers Community-Technical College, 574 New London Turnpike, Norwich, Connecticut, and the Waterford Library, ATTN: Vince Juliano, 49 Rope Ferry Road, Waterford, Connecticut.

Northeast Nuclear Energy Company, et al., Docket No. 50–336, Millstone Nuclear Power Station, Unit No. 2, New London County, Connecticut

Date of application for amendment: July 17, 1998, as supplemented November 10, 1998, and February 11, 1999.

Brief description of amendment: The amendment revises certain diesel generator (DG) action statements and surveillance requirements to improve overall DG reliability and availability.

Date of issuance: March 12, 1999.

Effective date: As of the date of issuance to be implemented within 60 days from the date of issuance.

Amendment No.: 231.

Facility Operating License No. DPR–65: Amendment revised the Technical Specifications.

Date of initial notice in **Federal Register:** August 12, 1998 (63 FR 43207).

The Commission's related evaluation of the amendment is contained in a Safety Evaluation dated March 12, 1999.

No significant hazards consideration comments received: No.

Local Public Document Room location: Learning Resources Center, Three Rivers Community-Technical College, 574 New London Turnpike, Norwich, Connecticut, and the Waterford Library, ATTN: Vince Juliano, 49 Rope Ferry Road, Waterford, Connecticut.

Northern States Power Company, Docket No. 50–263, Monticello Nuclear Generating Plant, Wright County, Minnesota

Date of application for amendment: November 25, 1997, as supplemented September 25 and November 11, 1998, and January 28, 1999.

Brief description of amendment: The amendment revises the Technical Specifications for the condensate storage tank (CST) low level suction transfer setpoint for the high pressure coolant injection (HPCI) and reactor core isolation cooling (RCIC) systems to allow removing one CST from service for maintenance.

Date of issuance: March 19, 1999.

Effective date: March 19, 1999, with full implementation within 30 days.

Amendment No.: 105.

Facility Operating License No. DPR–22. Amendment revised the Technical Specifications.

Date of initial notice in **Federal Register**: December 18, 1998 (63 FR 69344) The November 25, 1997, letter and September 25 and November 11, 1998, supplements were referenced in the original **Federal Register** notice. The January 28, 1999, supplement provided an updated Technical Specification page following the incorporation of Amendment 103, issued December 23, 1998. This information was within the scope of the original **Federal Register** notice and did not change the staff's initial proposed no significant hazards considerations determination.

The Commission's related evaluation of the amendment is contained in a Safety Evaluation dated March 19, 1999.

No significant hazards consideration comments received: No.

Local Public Document Room location: Minneapolis Public Library, Technology and Science Department, 300 Nicollet Mall, Minneapolis, Minnesota 55401.

Northern States Power Company, Docket Nos. 50–282 and 50–306, Prairie Island Nuclear Generating Plant, Units 1 and 2, Goodhue County, Minnesota

Date of application for amendments: November 25, 1998.

Brief description of amendments: The amendments revise Technical Specifications 3.2 and Table 3.5–2B to allow limited inoperability of boric acid storage tank level channels and transfer logic channels to provide for required testing and maintenance of the associated components.

Date of issuance: March 17, 1999.

Effective date: March 17, 1999, with full implementation within 30 days

Amendment Nos.: 143 and 134.

Facility Operating License Nos. DPR–42 and DPR–60. Amendments revised the Technical Specifications.

Date of initial notice in **Federal Register**: December 16, 1998 (63 FR 69345).

The Commission's related evaluation of the amendments is contained in a Safety Evaluation dated March 19, 1999.

No significant hazards consideration comments received: No.

Local Public Document Room location: Minneapolis Public Library, Technology and Science Department, 300 Nicollet Mall, Minneapolis, Minnesota 55401.

Pacific Gas and Electric Company, Docket Nos. 50–275 and 50–323, Diablo Canyon Nuclear Power Plant, Unit Nos. 1 and 2, San Luis Obispo County, California

Date of application for amendments: July 30, 1997, as supplemented by letter dated December 23, 1998.

Brief description of amendments: The amendments revise the combined Technical Specifications (TS) for the Diablo Canyon Power Plant (DCPP) Unit Nos. 1 and 2 by adding a Limiting Condition for Operation, trip setpoints, and surveillance requirements for a residual heat removal pump trip on refueling water storage tank level-low.

Date of issuance: March 26, 1999.

Effective date: March 26, 1999, to be implemented within 30 days from the date of issuance.

Amendment Nos.: Unit 1—130; Unit 2—128.

Facility Operating License Nos. DPR–80 and DPR–82: The amendments revised the Technical Specifications.

Date of initial notice in **Federal Register**: December 31, 1997 (62 FR 68312).

The December 31, 1997 supplemental letter provided additional clarifying information, did not expand the scope of the application as originally noted, and did not change the staff's proposed no significant hazards consideration determination.

The Commission's related evaluation of the amendments is contained in a Safety Evaluation dated March 26, 1999.

No significant hazards consideration comments received: No.

Local Public Document Room location: California Polytechnic State University, Robert E. Kennedy Library, Government Documents and Maps Department, San Luis Obispo, California 93407.

Pacific Gas and Electric Company, Docket Nos. 50–275 and 50–323, Diablo Canyon Nuclear Power Plant, Unit Nos. 1 and 2, San Luis Obispo County, California

Date of application for amendments: August 26, 1997, as supplemented by letters dated October 14 and November 13, 1997, and January 29, 1998.

Brief description of amendments: The amendments approve a modification to the Diablo Canyon Power Plant (DCPP), Unit Nos. 1 and 2 auxiliary saltwater (ASW) system to bypass approximately 800 feet of Unit 1 and 200 feet of Unit 2 Class 1 ASW pipe, a portion of which is buried below sea level in the tidal zone outside the intake structure.

Date of issuance: March 26, 1999.

Effective date: March 26, 1999, and shall be implemented in the next

periodic update to the FSAR Update in accordance with 10 CFR 50.71(e).

Amendment Nos.: Unit 1—131; Unit 2—129.

Facility Operating License Nos. DPR–80 and DPR–82: The amendments revised the Final Safety Analysis Report Update.

Date of initial notice in **Federal Register**: September 16, 1997 (62 FR 48677).

The October 14 and November 13, 1997, and January 29, 1998, supplemental letters provided additional clarifying information, did not expand the scope of the application as originally noticed, and did not change the staff's original proposed no significant hazards consideration determination.

The Commission's related evaluation of the amendments is contained in a Safety Evaluation dated March 26, 1999.

No significant hazards consideration comments received: No.

Local Public Document Room location: California Polytechnic State University, Robert E. Kennedy Library, Government Documents and Maps Department, San Luis Obispo, California 93407.

Public Service Electric & Gas Company, Docket Nos. 50–272 and 50–311, Salem Nuclear Generating Station, Unit Nos. 1 and 2, Salem County, New Jersey

Date of application for amendments: September 25, 1996, as supplemented on October 29, 1997, March 16, 1998, and February 8, 1999.

Brief description of amendments: The amendments revise the Technical Specifications by revising the voltage and frequency acceptance criteria and the start-timing methodology for the emergency diesel generator surveillance testing.

Date of issuance: March 23, 1999.

Effective date: As of date of issuance, to be implemented within 60 days.

Amendment Nos: 218 and 200.

Facility Operating License Nos. DPR–70 and DPR–75. The amendments revised the Technical Specifications.

Date of initial notice in **Federal Register**: October 23, 1996 (61 FR 5039).

The October 29, 1997, March 16, 1998, and February 9, 1999, letters provided clarifying information that did not change the initial proposed no significant hazards consideration determination.

The Commission's related evaluation of the amendments is contained in a Safety Evaluation dated March 23, 1999.

No significant hazards consideration comments received: No.

Local Public Document Room location: Salem Free Public Library, 112 West Broadway, Salem, NJ 08079.

Public Service Electric & Gas Company, Docket Nos. 50–272 and 50–311, Salem Nuclear Generating Station, Unit Nos. 1 and 2, Salem County, New Jersey

Date of application for amendments: September 17, 1998.

Brief description of amendments: The amendments revise Technical Specification 3/4.8.2, ''Electrical Power Sources—Shutdown,'' for the AC distribution system and the 125-volt and 28-volt DC distribution systems. Specifically, the amendments change the Applicability and Action Statements, if less than the complement of equipment and buses are operable, to eliminate the need to establish containment integrity and to add the action to suspend core alterations, positive reactivity additions, and movement of irradiated fuel assemblies.

Date of issuance: March 24, 1999.

Effective date: As of the date of issuance, to be implemented within 60 days.

Amendment Nos.: 219 and 201.

Facility Operating License Nos. DPR–70 and DPR–75. The amendments revised the Technical Specifications.

Date of initial notice in **Federal Register**: October 21, 1998 (63 FR 56257).

The Commission's related evaluation of the amendments is contained in a Safety Evaluation dated March 24, 1999.

No significant hazards consideration comments received: No.

Local Public Document Room location: Salem Free Public Library, 112 West Broadway, Salem, NJ 08079.

Tennessee Valley Authority, Docket Nos. 50–327 and 50–328, Sequoyah Nuclear Plant, Units 1 and 2, Hamilton County, Tennessee

Date of application for amendments: April 6, 1995, as supplemented on August 21, 1995. (TS 95–19).

Brief description of amendments: The amendments change the licenses for Sequoyah Nuclear Plant, Units 1 and 2 by removing the license conditions that reference the post-accident sampling system (PASS). The PASS information has been placed in the Sequoyah Final Safety Analysis Report (FSAR). This Change is consistent with NUREG–1431, ''Standard Technical Specifications—Westinghouse Plants.''

Date of issuance: March 16, 1999.

Effective date: March 16, 1999.

Amendment Nos.: 243 and 233.

Facility Operating License Nos. DPR–77 and DPR–79: The amendments revise the licenses.

Date of initial notice in **Federal Register**: April 26, 1995 (60 FR 20527). The August 21, 1995, letter provided clarifying information that did not change the original no significant hazards consideration determination.

The Commission's related evaluation of the amendment is contained in a Safety Evaluation dated March 16, 1999.

No significant hazards consideration comments received: None.

Local Public Document Room location: Chattanooga-Hamilton County Library, 1001 Broad Street, Chattanooga, Tennessee 37402.

Vermont Yankee Nuclear Power Corporation, Docket No. 50–271, Vermont Yankee Nuclear Power Station, Vernon, Vermont

Date of application for amendment: April 23, 1998, as supplemented on January 25, 1999.

Brief description of amendment: The amendment changes the existing requirements for the Residual Heat Removal Service Water (RHRSW), Station Service Water (SSW) and Alternate Cooling Tower Systems (ACS) as identified in Technical Specifications (TSs) 4.5.C and 3/4.5.D.

Specifically, the changes are as follows:

(1) Specifications 3.5.D.3 and 4.5.D.3: This requirement is revised to delete the existing allowance for 7 days of operation after both SSW subsystems are made or found to be inoperable.

(2) Specification 4.5.C.1 and Specification 4.5.D.1: These requirements have been revised to relocate testing information related to pump flow and pressure testing characteristics for the RHRSW and SSW Systems, respectively, to the Technical Requirements Manual.

(3) Specifications 3.5.D.1, 3.5.D.2, 3.5.D.3, 4.5.D.2, 4.5.D.3, and associated Bases: All references to SSW ''subsystem'' have been replaced by ''essential equipment cooling loop'' to more accurately reflect the Vermont Yankee design and operation. In addition, certain operability clarifications have been made to the Bases relative to affected Specifications.

(4) Bases for Specification 3.5.D: The Bases have been revised to omit statements that imply that the ACS could provide adequate heat removal following a postulated accident. Other Bases additions have been made that include certain operability clarifications relative to affected Specifications.

Date of Issuance: March 11, 1999.

Effective date: As of the date of issuance, to be implemented within 30 days.

Amendment No.: 169.

Facility Operating License No. DPR–28: Amendment revised the Technical Specifications.

Date of initial notice in **Federal Register**: February 10, 1999 (64 FR 6713).

The January 25, 1999, supplement did not affect the original proposed no significant hazards consideration.

The Commission's related evaluation of this amendment is contained in a Safety Evaluation dated March 11, 1999.

No significant hazards consideration comments received: No.

Local Public Document Room location: Brooks Memorial Library, 224 Main Street, Brattleboro, Vermont 05301.

Wolf Creek Nuclear Operating Corporation, Docket No. 50–482, Wolf Creek Generating Station, Coffey County, Kansas

Date of amendment request: March 20, 1998, as supplemented by letters dated May 28, June 30, August 28, September 4, November 20, and December 8, 1998.

Brief description of amendment: The amendment revised the technical specifications (TS) to support a modification to the plant to increase the storage capacity of the spent fuel pool and increase the nominal fuel enrichment to 5% weight percent of U–235. The amendment also revised the TS to allow the storage of an additional 279 assemblies in the cask loading pit.

Date of issuance: March 22, 1999.

Effective date: March 22, 1999, to be fully implemented no later than December 31, 1999, except that the racks in the cask loading pit may be installed at a future time after the completion of the next refueling outage.

Amendment No.: 120.

Facility Operating License No. NPF–42: The amendment revised the Technical Specifications.

Date of initial notice in **Federal Register**: July 13, 1998 (63 FR 37601). The June 30, August 28, September 4, November 20, and December 8, 1998, supplemental letters provided additional clarifying information, did not expand the scope of the application as originally noticed, and did not change the staff's proposed no significant hazards consideration determination.

The Commission's related evaluation of the amendment is contained in a Safety Evaluation dated March 22, 1999.

No significant hazards consideration comments received: No.

Local Public Document Room locations: Emporia State University, William Allen White Library, 1200 Commercial Street, Emporia, Kansas 66801 and Washburn University School of Law Library, Topeka, Kansas 66621.

Wolf Creek Nuclear Operating Corporation, Docket No. 50–482, Wolf Creek Generating Station, Coffey County, Kansas

Date of amendment request: February 4, 1998, as supplemented by letter dated October 20, 1998.

Brief description of amendment: The amendment revises the requirements in Technical Specification Tables 3.3–3, 3.3–4 and 4.3–2 regarding the engineered safety features actuation system (ESFAS) Functional Unit 6.f, and adds a note to Table 4.3–2 to clarify the verification of time delays associated with ESFAS Functional Units 8.a and 8.b.

Date of issuance: March 23, 1999.

Effective date: March 23, 1999, to be implemented within 30 days from the date of issuance.

Amendment No.: 121.

Facility Operating License No. NPF–42. The amendment revised the Technical Specifications.

Date of initial notice in **Federal Register**: March 25, 1998 (63 FR 14491). The October 20, 1998, supplemental letter provided additional clarifying information, did not expand the scope of the application as originally noticed and did not change the staff's original proposed no significant hazards consideration determination. The Commission's related evaluation of the amendment is contained in a Safety Evaluation dated March 23, 1999.

No significant hazards consideration comments received: No.

Local Public Document Room locations: Emporia State University, William Allen White Library, 1200 Commercial Street, Emporia, Kansas 66801 and Washburn University School of Law Library, Topeka, Kansas 66621.

Dated at Rockville, Maryland, this 31st day of March 1999.

For the Nuclear Regulatory Commission.

Suzanne C. Black,

Acting Director, Division of Licensing Project Management, Office of Nuclear Reactor Regulation.

[FR Doc. 99–8503 Filed 4–6–99; 8:45 am]

BILLING CODE 7590–01–P

NUCLEAR REGULATORY COMMISSION

State of Ohio: NRC Staff Assessment of a Proposed Agreement Between the Nuclear Regulatory Commission and the Sate of Ohio; Correction

AGENCY: Nuclear Regulatory Commission.

ACTION: Notice of a proposed agreement with the State of Ohio; Correction.

SUMMARY: This document corrects two notices appearing in the **Federal Register** on March 18, 1999 (64 FR 13453), and March 25, 1999 (64 FR 14473). This action is necessary to correct the comment period expiration date in each notice.

FOR FURTHER INFORMATION CONTACT: David L. Meyer, Chief, Rules and Directives Branch, Division of Administrative Services, Office of Administration, Washington, D.C. 20555–0001, telephone 301–415–7162, e-mail *dlm1@nrc.gov*.

1. In the **Federal Register** dated March 18, 1999, on page 13453, in the second column, under the **DATES** heading, April 19, 1999, is corrected to read April 12, 1999.

2. In the **Federal Register** dated March 25, 1999, on page 14473, in the second column, under the **DATES** heading, April 26, 1999, is corrected to read April 12, 1999.

Dated at Rockville, Maryland, this 1st day of April 1999.

For the Nuclear Regulatory Commission.

David L. Meyer,

Chief Rules and Directives Branch, Division of Administrative Services, Office of Administration.

[FR Doc. 99–8599 Filed 4–6–99; 8:45 am]

BILLING CODE 7590–01–P

PENSION BENEFIT GUARANTY CORPORATION

Request for Extension of Approval of a Collection of Information Under the Paperwork Reduction Act; Customer Service Focus Groups and Surveys

AGENCY: Pension Benefit Guaranty Corporation.

ACTION: Notice of request for extension of OMB approval.

SUMMARY: The Pension Benefit Guaranty Corporation is requesting that the Office of Management and Budget extend its approval of a collection of information under the Paperwork Reduction Act. The purpose of the information collection, which will be conducted through focus groups and surveys over a three-year period, is to help the PBGC assess the efficiency and effectiveness with which it serves its customers and to design actions to address identified problems.

DATES: Written comments should be submitted to OMB at the address below within 30 days after April 7, 1999.

ADDRESSES: All written comments should be addressed to: Office of Information and Regulatory Affairs, OMB, Attention: Desk Officer for the

Pension Benefit Guaranty Corporation, 725 17th Street, NW., Room 10235, Washington, DC 20503. The request for approval and copies of the proposed collection of information will be available for public inspection at the PBGC Communications and Public Affairs Department, suite 240, 1200 K Street, NW., Washington, DC 20005, between the hours of 9 a.m. and 4 p.m.

FOR FURTHER INFORMATION CONTACT: Marc L. Jordan, Attorney, Office of the General Counsel, Suite 340, 1200 K Street, NW., Washington, DC 20005, 202–326–4024. (For TTY/TDD users, call the Federal relay service toll-free at 1–800–877–8339 and ask to be connected to 202–326–4024.)

SUPPLEMENTARY INFORMATION: An agency may not conduct or sponsor, and a person is not required to respond to, a collection of information unless it displays a currently valid OMB control number.

The PBGC is requesting that OMB extend its approval, for a three-year period, of a generic collection of information consisting of customer satisfaction focus groups and surveys (OMB control number 1212–0053; expires April 30, 1999). The collection is in furtherance of the goals described in Executive Order 12862, Setting Customer Service Standards, which states that, in order to carry out the principles of the National Partnership for Reinventing Government (formerly, the National Performance Review), the Federal Government must be customer-driven. The Executive Order directs all executive departments and agencies that provide significant services directly to the public to provide those services in a manner that seeks to meet the customer service standards established in the Executive Order.

This collection of information enables the PBGC to explore issues of mutual concern (*e.g.*, kind and quality of desired services) with its major outside client groups, *i.e.*, participants and beneficiaries, plan sponsors and their affiliates, plan administrators, pension practitioners and others involved in the establishment, operation and termination of plans covered by the PBGC's insurance program. The areas of concern to the PBGC and its client groups change over time, and it is important that the PBGC have the ability to evaluate customer concerns quickly.

Participation in the focus groups and surveys will be voluntary. The PBGC will consult with OMB regarding each specific information collection during the approval period.

This voluntary collection of information will put a slight burden on a very small percentage of the public. The PBGC expects to conduct focus groups involving a total of approximately 225 persons each year, with a total annual burden of approximately 675 hours, including travel time. (Some portion of this time may be spent completing surveys at focus group meetings.) In addition, the PBGC expects to distribute written surveys to approximately 1,600 persons each year (in most cases as an adjunct to a focus group), with a total annual burden of approximately 200 hours.

On January 15, 1999, the PBGC published in the **Federal Register** a notice of intention to request extension of OMB approval of this collection. No comments were received in response to the notice.

Issued at Washington, D.C., this 31st day of March, 1999.

Stuart Sirkin,

Director, Corporate Policy and Research Department, Pension Benefit Guaranty Corporation.

[FR Doc. 99–8586 Filed 4–6–99; 8:45 am]

BILLING CODE 7708–01–P

RAILROAD RETIREMENT BOARD

Privacy Act of 1974; Proposed Changes to System of Records

AGENCY: Railroad Retirement Board.

ACTION: Notice of a proposed routine use.

SUMMARY: The purpose of this document is to give notice of a proposed routine use to one of the RRB's Privacy Act systems of records.

DATES: The new routine use will be effective 30 calendar days from the date of this publication (May 7, 1999), unless comments are received before this date which would result in a contrary determination.

ADDRESSES: Send comments to Beatrice Ezerski, Secretary to the Board, Railroad Retirement Board, 844 North Rush Street, Chicago, Illinois 60611–2092.

FOR FURTHER INFORMATION CONTACT: LeRoy Blommaert, Privacy Act Officer, Railroad Retirement Board, 844 North Rush Street, Chicago, Illinois 60611–2092, (312) 751–4548.

SUPPLEMENTARY INFORMATION:

I. Discussion of Proposed Routine Use

The Railroad Retirement Board currently furnishes the Bureau of Labor Statistics with the city, state, and five digit zip code of each person who receives unemployment benefits from the RRB. The Social Security Number is scrambled so that the information furnished is not individually identifiable. The Bureau uses this information to aggregate unemployment claims by county in its Local Area Unemployment Statistics (LAUS) program. The Bureau has requested that in addition the RRB furnish the physical street address. Furnishing the physical street address would, in cases where the address is a single family residence or where the apartment number is part of the address, identify the household of the person who received unemployment benefits. The Bureau has requested this additional information because they have found that a city and zip code does not always produce a unique county location (a zip code area may straddle two or more counties). A physical street address will always produce a valid county location.

The RRB currently discloses scrambled SSN, city and state address information pursuant to 5 U.S.C. 552a(b)(5), namely, ''to a recipient who has provided the agency with advance adequate written assurance that the record will be used solely as a statistical research or reporting record and the record is to be transferred in a form that is not individually identifiable'' It is the RRB's interpretation that furnishing the physical address requires the publication of a routine use because of the possibility that the record with this additional information would be individually identifiable.

II. Compatibility of Proposed Routine Use

We are proposing this routine use in accordance with the Privacy Act (5 U.S.C. 552a(b)(3)). The Privacy Act permits the disclosure of information about individuals without their consent for a routine use where the information will be used for a purpose which is compatible with the purpose for which the information was originally collected. The Office of management and Budget has indicated that a ''compatible'' use is a use which is necessary and proper. The RRB considers the disclosure of statistical information to the Department of Labor for use in developing unemployment statistics on a local area basis a proper use. To the extent that the disclosure of the physical address is necessary to achieve accurate local area unemployment statistics, the RRB believes the use is necessary as well.

III. Altered system report

On March 29, 1999, the Railroad Retirement Board filed an altered system report for this system with the chairmen of the designated Senate and House committees and with the Office of management and Budget. This was

done to comply with section 3 of the Private Act of 1974 and OMB Circular No. A–130, Appendix I.

By authority of the Board.

Beatrice Ezerski,

Secretary to the Board.

RRB–21

SYSTEM NAME: Railroad Unemployment and Sickness Insurance Benefit System—RRB.

* * * * *

ROUTINE USES OF RECORDS MAINTAINED IN THE SYSTEM, INCLUDING CATEGORIES OF USERS AND THE PURPOSES OF SUCH USES:

* * * * *

Paragraph ''ff'' is added to read as follows:

* * * * *

ff. Scrambled Social Security Number and complete home address information of unemployment claimants may be furnished to the Bureau of Labor Statistics for use in its Local Area Unemployment Statistics (LAUS) program.

[FR Doc. 99–8539 Filed 4–6–99; 8:45 am]

BILLING CODE 7905–01

SECURITIES AND EXCHANGE COMMISSION

Issuer Delisting; Notice of Application To Withdraw From Listing and Registration; (K2 Design,Inc., Common Stock, $.01 Par Value, and Redeemable Common Stock Purchase Warrants) File No. 1–11873

March 31, 1999.

K2 Design, Inc. (''Company'') has filed an application with the Securities and Exchange Commission (''Commission''), pursuant to Section 12(d) of the Securities Exchange Act of 1934 (''Act'') and Rule 12d2–2(d) promulgated thereunder, to withdraw the above specified securities (''Securities'') from listing and registration on the Boston Stock Exchange, Inc. (''BSE'' or ''Exchange'').

The reasons cited in the application for withdrawing the Securities from listing and registration include the following:

The Securities of the Company have been listed for trading on the BSE and the Nasdaq SmallCap Market since July 26, 1996, pursuant to a Registration Statement on Form SB–2 which became effective on said date.

The Company has complied with the rules of the BSE by filing with the Exchange a certified copy of the resolutions adopted by the Company's Board of Directors authorizing the withdrawal of its Securities from listing on the BSE and by setting forth in detail to the Exchange the reasons for the proposed withdrawal and the facts in support thereof. In making the decision to withdraw its Securities from listing on the BSE, the Company considered the direct and indirect costs of maintaining dual listings of its Securities on the BSE and the Nasdaq SmallCap Market. The Company does not see any particular advantage in the dual trading of its Securities and believes that the dual listing, if continued, would fragment the market for its Securities.

The BSE has informed the Company that it has no objection to the Company's application to withdraw its Securities from listing on the Exchange.

The Company's application relates solely to the withdrawal from listing of its Securities from the BSE and shall have no effect upon the continued listing of the Securities on the Nasdaq SmallCap Market. By reason of Section 12(g) of the Act and the rules and regulations of the Commission thereunder, the Company shall continue to be obligated to file reports under Section 13 of the Act with the Commission.

Any interested person may, on or before April 21, 1999, submit by letter to the Secretary of the Securities and Exchange Commission, 450 Fifth Street, N.W., Washington, D.C. 20549–0609, facts bearing upon whether the application has been made in accordance with the rules of the Exchange and what terms, if any, should be imposed by the Commission for the protection of investors. The Commission, based on the information submitted to it, will issue an order granting the application after the date mentioned above, unless the Commission determines to order a hearing on the matter.

For the Commission, by the Division of Market Regulation, pursuant to delegated authority.

Margaret H. McFarland,

Deputy Secretary.

[FR Doc. 99–8516 Filed 4–6–99; 8:45 am]

BILLING CODE 8010–01–M

SECURITIES AND EXCHANGE COMMISSION

[Release No. 33–7664, File No. S7–12–99]

Securities Uniformity; Annual Conference on Uniformity of Securities Laws

AGENCY: Securities and Exchange Commission.

ACTION: Notice of conference; request for comments.

SUMMARY: The Commission and the North American Securities Administrators Association, Inc. today announced a request for comments on the proposed agenda for their annual conference to be held on April 19, 1999. This meeting seeks to carry out the policies and purposes of section 19(c) of the Securities Act of 1933, which are to increase cooperation between the Commission and state securities regulatory authorities in order to maximize the effectiveness and efficiency of securities regulation.

DATES: The conference will be held on April 19, 1999. We must receive your written comments by April 14, 1999 in order to be considered by conference participants.

ADDRESSES: Please send three copies of written comments to Jonathan G. Katz, Secretary, Securities and Exchange Commission, 450 5th Street, NW, Washington, DC 20549–0609. Comments also can be sent electronically to the following E-mail address: rule-comments@sec.gov. Comment letters should refer to File No. S7–12–99; if E-mail is used, please include this file number on the subject line. Anyone can inspect and copy the comment letters at our Public Reference Room, 450 5th Street, NW, Washington, DC 20549. All electronic comment letters will be posted on the Commission's internet web site (http://www.sec.gov).

FOR FURTHER INFORMATION CONTACT: John D. Reynolds, Office of Small Business Review, Division of Corporation Finance, Securities and Exchange Commission, 450 5th Street, NW, Washington, DC 20549, Stop 3–4, (202) 942–2950.

SUPPLEMENTARY INFORMATION:

I. Discussion

The federal government and the states have jointly regulated securities offerings since the adoption of the federal regulatory structure in the Securities Act of 1933 (the ''Securities Act'').[1] Issuers trying to raise capital through securities offerings, as well as participants in the secondary trading markets, must comply with the federal securities laws as well as all applicable state laws and regulations. Parties involved in this process have long recognized the need to increase uniformity and cooperation between the federal and state regulatory systems so that capital formation can be made

[1] 15 U.S.C. 77a *et seq.*

easier while investor protections are retained.

Congress endorsed greater uniformity in securities regulation with the enactment of section 19(c) of the Securities Act in the Small Business Investment Incentive Act of 1980.[2] Section 19(c) authorizes the Commission to cooperate with any association of state securities regulators which can assist in carrying out that section's policy and purpose. Section 19(c) mandates greater federal and state cooperation in securities matters in order to:

- Maximize effectiveness of regulation;
- Maximize uniformity in federal and state standards;
- Minimize interference with the business of capital formation; and
- Reduce the costs, paperwork and burdens of raising investment capital, particularly by small business, and also reduce the costs of the government programs involved.

The Commission is required to conduct an annual conference to establish ways to achieve these goals. The 1999 meeting will be the sixteenth conference.

During 1996, Congress again examined the system of dual federal and state securities regulation. It considered the need for regulatory changes to promote capital formation, eliminate duplicative regulation, decrease the cost of capital and encourage competition, while at the same time promoting investor protection. Congress passed The National Securities Markets Improvement Act of 1996[3] (the ''1996 Act'') as a result of this reexamination. The 1996 Act contains significant provisions that realign the partnership between federal and state regulators. The legislation reallocates responsibility for regulation of the nation's securities markets between the federal government and the states in order to eliminate duplicative costs and burdens and improve efficiency, while preserving investor protections.

II. 1999 Conference

The Commission and the North American Securities Administrators Association, Inc. (''NASAA'')[4] are planning the 1999 Conference on Federal-State Securities Regulation to be held April 19, 1999 in Washington, DC. At the conference, Commission and NASAA representatives will divide into working groups in the areas of corporation finance, market regulation and oversight, investment management, investor education, and enforcement. Each group will discuss methods to enhance cooperation in securities matters and improve the efficiency and effectiveness of federal and state securities regulation. Generally, only Commission and NASAA representatives may attend the conference to encourage open and frank discussion. However, each working group in its discretion may invite certain self-regulatory organizations to attend and participate in certain sessions.

The Commission and NASAA are preparing the conference agenda. We invite the public, securities associations, self-regulatory organizations, agencies, and private organizations to participate by submitting written comments on the issues set forth below. In addition, we request comment on other appropriate subjects. Conference attendees will consider all comments.

III. Tentative Agenda and Request for Comments

The tentative agenda for the conference consists of the following topics in the areas of corporation finance, investment management, market regulation and oversight, investor education, and enforcement.

(1) Corporation Finance Issues

The 1996 Act amended section 18 of the Securities Act[5] to preempt state blue-sky registration and review of offerings of ''covered securities.''[6] ''Covered securities'' are defined by section 18 and include several types of securities, including securities traded on the New York Stock Exchange, Inc. (''NYSE''), American Stock Exchange (''Amex'') and the Nasdaq National Market System (''Nasdaq/NMS'') (these securities as a group are called ''nationally-traded'' securities). Covered securities also include registered investment company securities and certain exempt securities and offerings.

The states retain some authority in connection with offerings of covered securities despite this preemption. Except for covered securities that are classified as nationally-traded securities, the states have the right to require fee payments and notice filings. The states also retain anti-fraud authority over all securities offerings, including offerings of covered securities.

Securities that are not ''covered securities remain subject to state registration requirements. These securities generally include the securities of smaller companies, such as those quoted on the Nasdaq SmallCap market or the NASD's over-the-counter Bulletin Board, or in the ''pink sheets.'' Securities issued in a private offering under section 4(2) of the Securities Act are not covered securities if the offering does not meet the safe harbor requirements of Rule 506 of Regulation D.[7] Also, securities issued under Regulation A[8] and Rules 504 and 505 of Regulation D are not covered securities.[9]

The states' authority over securities offerings, particularly their ability to register and review offerings of non-covered securities, continues the need for uniformity between the federal and state registration systems, where consistent with investor protection. The group will discuss ways to increase uniformity between the systems. Conferees will focus primarily on the following topics:

A. Reform of the Securities Offering Process

For many years, the Commission has been actively reexamining the regulatory framework for the offer and sale of securities under the federal securities laws. As a result of this work, the Commission issued a release in November 1998 proposing significant changes in the regulation of securities offerings and the disclosure system that applies to publicly reporting companies.[10] The proposals relate to five areas:

- Registration system reform;
- Communications around the time of a securities offering;
- Prospectus delivery requirements;
- Integration of private and public offerings; and
- Periodic reporting under the Securities Exchange Act of 1934 (the ''Exchange Act'').

The Commission's staff will summarize these proposals and describe the responses from the public received to date. While the group may consider various aspects of the proposals, the representatives will discuss primarily how the proposals would affect state regulation of offerings of non-covered securities. The group will focus on some or all of the following matters:

[2] Pub. L. 96–477, 94 Stat. 2275 (October 21, 1980).

[3] Pub. L. 104–290, 110 Stat. 3416 (October 11, 1996).

[4] NASAA is an association of securities administrators from each of the 50 states, the District of Columbia, Puerto Rico, Mexico and twelve Canadian Provinces and Territories.

[5] 15 U.S.C. 77r.

[6] 15 U.S.C. 77r (a) and (b).

[7] 17 CFR 230.501 through 230.508.

[8] 17 CFR 230.251 through 230.263.

[9] Other securities also are not considered covered securities. These include securities traded on regional exchanges and asset-backed and mortgage-backed securities.

[10] Securities Act Release No. 7606 (November 3, 1998) [63 FR 67174].

1. Registration System Reforms

The Commission proposed new Form B for large issuers that meet certain reporting and annual report requirements and had registered previously an offering of securities under the Securities Act which was declared effective by the Commission's staff. Form B also would be available to smaller issuers which meet the same requirements, but only when they offer securities to relatively sophisticated investors or knowledgeable investors.

These smaller issuers could use Form B for offerings to qualified institutional buyers as defined in Rule 144A[11] and for offerings to certain existing security holders, such as: rights offerings; securities offered under dividend or interest reinvestment plans; and offerings to holders of common stock, options, warrants and convertible securities.

Form B would replace Form S–3, the current abbreviated registration statement form, and provide issuers with more flexibility than under the current system. The issuer would be able to delay filing the Form B registration statement until shortly before the first sale of securities and would be able to determine when its registration statement becomes effective.

The Commission proposed new Form A for medium-sized issuers.[12] It would replace Form S–1, the current registration statement form used by most issuers. Form A would be used by issuers that do not meet the requirements to use Form B. Some Form A issuers would be able to specify the time of effectiveness of their registration statements. Form A issuers that are able to incorporate company information into their prospectuses would be able to control the timing of effectiveness if either:

- They have a public float equal to or greater than $75 million; or
- The Exchange Act annual report that is incorporated into the Form A registration statement was reviewed by the Commission's staff and amended to comply with any staff comments.

The group will discuss these proposed registration statement reforms and consider how they would operate with state registration procedures for offerings of non-covered securities.

2. Communications Around the Time of an Offering

Under current federal regulation, an issuer's communications to investors and the market are strictly limited around the time of an offering. The Commission's proposals in this area would loosen these restrictions while preserving the legal remedies to investors for inadequate disclosures.

The approach would depend upon the type of offering. For Form B offerings, issuers would be able to make oral and written communications in any format at any time regardless of whether the offering is imminent or ongoing. Those communciations of course would be subject to the liability provisions of the federal securities laws and would need to be filed with the Commission.

For non-Form B offerings, the Commission has proposed a bright-line safe harbor for all communications made before the 30-day period before the date of filing the registration statement. Communications within 30 days of filing would remain restricted although the Commission has proposed safe harbors for factual business communications and regularly released, forward-looking information. After the registration statement is filed, the Commission proposes to lift restrictions on communications. These post-filing communications would be subject to the liability provisions and would have to be filed with the Commission.

The group will discuss the proposed federal approach to communications. The conferees also will consider how the Commission's proposals would coordinate with state regulations applicable to communications.

3. Integration of Offerings

An issuer of securities that has commenced a private offering may decide to switch to a registered public offering. Similarly, an issuer may decide to end a registered offering and offer securities under a private exemption. The current federal rules prevent most companies from switching from registration to a private offering, and vice versa, in a timely fashion. The Commission has proposed changes to remove most of these impediments.

The Commission has proposed a safe harbor for issuers that have started a registered offering and wish to switch to a private offering. Under the safe harbor, the issuer may withdraw its registration statement and either wait 30 days to sell privately or sell privately sooner if it accepts a higher liability standard for written disclosures provided to purchasers.

Another safe harbor would apply to an issuer that has started a private offering and later decides to abandon it and file a registration statement. Under this proposal, the issuer could file a registration statement for a public offering immediately after abandonment of the private offering, unless it had offered the securities to persons ineligible to buy in a private offering. In that case, the issuer would need to wait 30 days before filing its registration statement.

The group will discuss the proposed integration safe harbors and consider how they would coordinate with state rules that apply in these situations.

B. Small Business Initiatives

1. Registration System Reform—Effects on Small Business Issuers

Certain Commission registration reform proposals are tailored to benefit smaller issuers. One important proposal would modify the definition of ''small business issuer.'' In 1992 and 1993, the Commission adopted special forms for small issuers to use in registering under the Securities Act and Exchange Act and in reporting under the Exchange Act. The disclosure requirements of these forms are less extensive than those applicable to larger issuers. The Commission adopted the definition of ''small business issuer'' to distinguish the class of smaller issuers that would be permitted to use these special forms. A small business issuer generally is a company with revenues of less than $25 million and a public float of less than $25 million.[13]

The Commission proposed to change the definition by increasing the revenue level to $50 million and removing the public float limitation. This proposal would update the definition for the significant economic and market changes that have occurred since the definition was adopted in 1992. The proposal would significantly increase the number of public companies that would qualify as small business issuers.

Another important reform proposal would allow small business issuers to use Form B when offering securities to relatively sophisticated or knowledgeable investors. Small business issuers would be able to enjoy the various benefits of Form B in these offerings.[14]

Other reform proposals also would benefit smaller issuers. Under one proposal, a small business issuer whose registration statement has become effective would be allowed to increase the size of its offering by up to 50% of the maximum offering price of the earlier effective registration statement. The second registration statement for the additional offering amount would become effective automatically under certain circumstances. Another proposal

[11] 17 CFR 230.144A.

[12] The effects of the reform proposals on small business issuers are discussed under (1) B.1. below.

[13] 17 CFR 228.10. Other requirements also must be met.

[14] See discussion under (1) A.1. above.

would permit incorporation by reference of Exchange Act reports into Form SB–2, the basic registration statement for small business issuers. This change would permit earlier incorporation by reference than allowed currently.[15] Also, the Commission proposed a new Form SB–3, a registration statement form designed especially for small business issuers to use in business combinations.

The Commission's integration proposal, although applicable to all issuers, may benefit small business issuers in particular. Because small business issuers often have no market or only a limited market for their securities before a securities offering, they may be unable to predict investors' interest in their offerings. Once a smaller issuer begins an offering, it may wish to switch between a registered offering and an exempt offering depending upon the amount of investor interest in its securities. The integration proposal would permit an issuer to switch between registration and an exemption in a timely manner if certain conditions are met.[16]

The group will discuss the impact of these proposed changes, if adopted, and the need for any additional rulemaking in the small business area.

2. Rule 504

Rule 504 of Regulation D provides an exemption from the Securities Act registration requirements for offerings up to $1 million in any 12-month period, if certain conditions are met. Generally, Rule 504 is available only to the smallest companies that do not report under the Exchange Act. Under prior Rule 504, issuers were permitted to generally solicit and advertise in Rule 504 offerings, and the securities issued in those offerings were freely tradeable. The Commission recently amended Rule 504 to address concerns with the previous approach.[17] The revised rule limits the circumstances where general solicitation is permitted and freely tradeable securities are issued under the rule. Specifically, issuers may generally solicit and advertise and issue freely tradeable securities only in transactions that are either:

- Registered under state law requiring public filing and delivery of a substantive disclosure document to investors before sale; or
- Exempted under state law permitting general solicitation and general advertising so long as sales are made only to ''accredited investors.''[18]

Only companies that do not report under the Exchange Act may use Rule 504. Where an issuer becomes a reporting company during an ongoing Rule 504 offering, the issuer may not continue to rely on the rule after it becomes a reporting company. To address this case, one of the Commission's reform proposals would amend Rule 504 to permit an issuer that becomes a reporting company during an ongoing Rule 504 offering to continue to rely on the rule in that offering, if certain conditions are met.

The group will discuss the revisions and proposed amendment to Rule 504. Conferees will consider whether other changes are needed in the rule while at the same time preserving the ability of small companies to raise capital.

3. State Initiatives

The group will discuss several state initiatives designed to facilitate offerings by smaller issuers. These include:

- The Coordinated Equity Review (''CER'') program;
- The Small Company Offering Registration (''SCOR'') form; and
- The state regional review program for SCOR and Regulation A filings (the ''Regional Review Program'').

The CER program provides for a coordinated state review process for offerings of equity securities registered at the federal level. Under CER, the participating states coordinate with each other to produce one comment letter to an issuer which addresses both substantive and disclosure matters. To date, 38 states (out of 42 states that require registration of these offerings) have agreed to participate in the program. The states have reviewed approximately 32 registration statements under this program.

Many states use a similar coordinated program to review state registrations using the SCOR form, the ''Regional Review Program.'' The SCOR form is a simplified question and answer format used for the registration of securities offerings with approximately 47 states. This form is used to register securities offerings exempt from federal registration under Rule 504 of Regulation D or Regulation A. Under the Regional Review Program, states in certain regions of the country elect one state to lead the review and issue comments on the filing. Three regional programs have been started to date and include about 22 of the states requiring registration of these offerings.[19] About 37 SCOR filings have been reviewed under the Regional Review Program. The SCOR form was adopted by NASAA in 1989. NASAA's Small Business Capital Formation and Regional Review Committee is considering certain revisions to update and modernize the form.

NASAA's representatives will discuss their experiences with the SCOR form and the state coordinated review programs, including issues which have arisen in their use. Participants will consider how these programs may be improved to increase uniformity between the federal and state levels.

C. Definition of Qualified Purchaser and Accredited Investor; NASAA's Model Accredited Investor Exemption

Section 18 of the Securities Act, after the 1996 Act, excludes from state regulation and review securities offerings to purchasers who are defined by Commission's rules to be ''qualified purchasers.''[20] A security sold to a ''qualified purchaser'' is a ''covered security'' subject to the same regulatory approach as other covered securities. The Commission is planning to propose a definition of ''qualified purchaser'' for this purpose. In this process, the Commission is considering whether changes should be made to the definition of ''accredited investors'' under the Securities Act, and whether the definitions of ''qualified purchasers'' and ''accredited investors'' should be similar or different. The Commission and state representatives will discuss the appropriate criteria for these two definitions.

The group also will discuss NASAA's Model Accredited Investor Exemption which was adopted in 1997. Generally, the model rule exempts offers and sales of securities from state registration requirements if, among other things, the securities are sold only to persons who are, or are reasonably believed to be, accredited investors. To date, 16 states have adopted the exemption and other states indicate that they intend to adopt the exemption in the near future. State representatives will share their

[15] Existing Form S–2 permits incorporation by reference if the issuer has been reporting for a three year period and meets other requirements. Proposed Form SB–2 would reduce the three year period to two years.

[16] See the discussion under (1) A. 3. above.

[17] Securities Act Release No. 7644 (February 25, 1999) [64 FR 11090].

[18] 17 CFR 230.501(a). The term *accredited investor*, as defined by the Securities Act and the Commission's rules, is intended to encompass those persons whose financial sophistication render the protections of the Securities Act registration process unnecessary. Offers and sales to these investors are afforded special treatment under the federal securities laws.

[19] A fourth regional program is forming now. It will consist of six states in the mid-Atlantic region and expects to accept filings in late spring 1999.

[20] 15 U.S.C. 77r(b)(3).

experiences with the exemption, including any issues that have arisen.

D. Plain English Disclosure

Beginning October 1, 1998, issuers filing Securities Act registration statements must use plain English writing principles when drafting the front part of prospectuses, *i.e.*, the cover page and the summary and risk factors sections.[21] These plain English principles include: active voice; short sentences; everyday language; tabular presentation or ''bullet lists'' for complex material, if possible; no legal jargon or highly technical business terms; and, no multiple negatives.

The Division of Corporation Finance, in its full review of a registration statement, examines the prospectus for compliance with the plain English requirements. If appropriate, the Division staff will issue comments to obtain improved plain English disclosures. The Division representatives will discuss their experiences with the plain English system. The group will consider any issues that have arisen and federal and state coordination needed to facilitate success of the system.

E. Year 2000 Disclosure Issues

The Commission and its staff have published several statements which provide guidance about the disclosure requirements of public companies facing year 2000 technology problems. The Commission recently provided guidance in a July 1998 release.[22] That release provides advice to public companies so they can determine whether their year 2000 issues should be disclosed in the Management's Discussion and Analysis of Financial Condition and Results of Operations section of their disclosure documents. The release also advises public companies to consider Year 2000 issues when preparing their financial statements and drafting other disclosures, such as risk factors and business description disclosures. The working group will consider this issue and discuss how to require and review disclosures on this matter in a consistent manner.

(2) Market Regulation Issues

A. Books and Records

Section 103 of the 1996 Act prohibits any state from imposing broker-dealer books and records requirements that differ from, or are in addition to, the Commission's requirements. In addition, the same section directs the Commission to consult periodically with the state securities authorities concerning the adequacy of the Commission's books and records requirements.

On October 2, 1998, the Commission reproposed amendments to the books and records rules to clarify and expand recordkeeping requirements with respect to purchase and sale documents, customer records, associated person records, customer complaints, and certain other matters. The reproposed amendments also specified the books and records that broker-dealers would make available at their local offices. The Commission modified the reproposed amendments to reduce the burden on broker-dealers without substantially detracting from the original objective of establishing rules that would facilitate examinations and enforcement activities of the Commission, self regulatory organizations (''SROs''), and state securities regulators.[23] Among other changes in the reproposed amendments, the Commission redefined the term ''local office'' to include a place where two or more associated persons regularly conduct a securities business. The original proposal[24] defined the term local office to include a place where one associated person conducted a securities business. Furthermore, as reproposed, a broker-dealer would be required to update its customer account records at least once every three years. The original proposal required broker-dealers to update the customer account records annually.

The comment period closed December 9, 1998. The Commission received approximately 120 comment letters in response to the release re-proposing the amendments. The Commission's staff has been reviewing the comments that have been submitted. The working group will discuss these efforts to amend Rules 17a–3 and 17a–4.

B. Central Registration Depository

The CRD system is a computer system operated by the National Association of Securities Dealers, Inc. (''NASD'') and used by the Commission, the states and the SROs primarily as a means to facilitate registration of broker-dealers and their associated persons. The NASD is in the process of implementing a comprehensive plan to modernize the CRD and to expand its use by federal and state securities regulators as a tool for broker-dealer regulation. As a result of the NASD's efforts, the modernized CRD system ultimately is expected to provide the Commission, the SROs, and state securities regulators with: (1) Streamlined capture and display of data; (2) better access to registration and disciplinary information through the use of standardized and specialized computer searches; and (3) electronic filing of uniform registration and licensing forms, including Forms U–4, U–5, BD and BDW.

The NASD is preparing to implement the web-based form filing component of the modernized CRD system in the third quarter of 1999. In the past year, NASAA, the NASD, the Commission and others have worked together to modify Forms U–4, U–5 and BD in order to accommodate the electronic filing environment that will exist in the modernized CRD. At NASAA's Annual Fall conference held in October 1998, NASAA adopted new versions of Forms U–4 and U–5. The NASD has submitted, and the Commission is reviewing, a rule proposal to modify Forms U–4 and U–5. The NASD rule proposes additional formatting and technical changes to the forms in order to fully implement the web-based CRD system. Also, the Commission is considering revisions to the Form BD to accommodate web-based form filing.

In anticipation of the conversion to the web-based CRD system, the NASD is planning a two week transition period during which time registration activities will not be processed. This two week period is currently scheduled for the beginning of August 1999.

The conference participants will discuss the CRD modernization process, including the proposed changes to the forms and the transition period.

C. Micro-cap Fraud Rules

Rule 15c2–11 under the Exchange Act requires a broker-dealer to review current information about an issuer before it publishes a quotation for the issuer's security in the non-Nasdaq over-the-counter markets. Because of the rule's ''piggyback'' provision, generally only the first broker-dealer has to review this information. Once the security is quoted regularly for 30 days, other broker-dealers can ''piggyback'' off those quotes without reviewing any information about the issuer.

On February 17, 1998, the Commission proposed amendments to Rule 15c2–11 that would strengthen the rule in a number of ways.[25] The Commission received approximately

[21] Securities Act Release No. 7497 (January 28, 1998) [63 FR 6370].

[22] Securities Act Release No. 7558 (July 29, 1998) [63 FR 41394].

[23] Exchange Act Rel. No. 40518 (October 2, 1998) [63 FR 54404].

[24] Exchange Act Rel. No. 37850 (October 22, 1996) [61 FR 55593].

[25] Exchange Act Release No. 39670 (February 17, 1998) [63 FR 9661].

199 written comments from 193 commenters, including 68 identical letters from OTC Bulletin Board issuers in response to the release proposing amendments. Broker-dealers, trade associations, and law firms representing broker-dealers submitted 45% of the comment letters. OTC Bulletin Board issuers submitted 30% of the comment letters. State securities regulators and NASAA accounted for 5% of the comment letters. The majority of the comment letters opposed the proposed amendments. Because of the significant comments received, the Commission decided to modify some of these amendments and repropose them for public comment.[26] The reproposal acknowledges commenters' concerns about the initial proposal by limiting the scope of the rule principally to priced quotations and to those securities that are more likely to be the subject of improper activities. The provisions relating to the broker-dealer's obligations under the rule and the specified issuer information that the broker-dealer must obtain and review are essentially unchanged from the initial proposal. The reproposed amendments would:

- Eliminate the rule's piggyback provision and require all broker-dealers to review current issuer information before publishing priced quotations for a security;
- Limit the rule's applicability to priced quotations only (except in the case of the first broker-dealer to quote the security);
- Require broker-dealers publishing priced quotations for a security to review current information about the issuer at least annually;
- Require documentation of the broker-dealer's compliance with the rule; and
- Require broker-dealers publishing quotes in compliance with the rule to make the issuer information available at the request of customers, prospective customers, information repositories, and other broker-dealers to the extent that such information is not available through EDGAR, any other federal or state electronic information system, or an information repository.

However, the new amendments would narrow the scope of the rule to those kinds of securities most frequently involved in micro-cap fraud schemes by excluding the following securities:

- Securities with a worldwide average daily trading volume value of at least $100,000 during each of the six full calendar months immediately preceding the date of publication of a quotation, and convertible securities where the underlying security satisfies this threshold;
- Securities with a bid price of at least $50 per share;
- Securities of issuers with net tangible assets in excess of $10,000,000, based on audited financial statements; and
- Non-convertible debt, non-participatory preferred stock, and investment grade asset-backed securities.

The amendments also reorganize and simplify the rule's provisions consistent with the Commission's plain English program. The goals of the amendments are to deter fraudulent or manipulative quotations for OTC securities, improve the integrity of quotations for OTC securities, enhance broker-dealer responsibility for quotations for OTC securities, and provide market professionals, investors, and others with greater access to issuer information. The participants will discuss the recent reproposal and the effects of such reproposal, if adopted, and other ways to promote investor protection in the OTC market arena.

D. NASD Proposals

The NASD has undertaken several regulatory initiatives in the past two years. A new rule change limited the securities that a member can quote on the OTC Bulletin Board to the securities of issuers that are registered under section 12 of the Exchange Act, certain insurance companies, and registered closed-end investment companies, but only if they are current in their reporting obligations.

A proposed rule amendment would require clearing firms to (1) forward customer complaints about an introducing firm to the introducing firm and the introducing firm's designated examining authority (''DEA''), (2) notify complaining customers that the complaint has been forwarded to the introducing member and the introducing member's DEA, (3) provide introducing firms with a list of exception reports available to help the introducing firms supervise their activities, and (4) permit introducing firms to issue checks drawn on the clearing firm's account only after the introducing firm has notified the clearing firm, in writing, that it has established and will maintain and enforce appropriate supervisory procedures.

The NASD submitted a proposed rule that would provide guidelines that apply to the employment and supervision of unregistered persons who contact prospective and existing customers, and provide for heightened supervision of cold callers. This proposal is currently out for comment.

Finally, a new rule proposed by the NASD in 1998 would require a member to review current financial statements of an issuer prior to recommending a transaction in the issuer's OTC securities to a customer, and to deliver a disclosure statement to its customer prior to making an initial purchase of an OTC security for the customer, and annually thereafter.

These four initiatives are still being reviewed by the Commission. The working group will discuss the impact of the new rules, the status of the proposals, the comments received to date, and their implications for small businesses and NASAA members.

E. Arbitration

The NASD submitted to the Commission rule filings that focus on and deal with the eligibility rule, the contract rule, the creation of a discovery guide for arbitrators, whether punitive damages should be capped in arbitration, and the use of interim injunctive relief in arbitration. On June 22, 1998, the Commission approved an NASD rule filing which eliminated the NASD's regulatory requirement that securities industry employees arbitrate statutory employment discrimination claims.[27] Additionally, on December 29, 1998, the Commission approved by delegated authority the NYSE's proposal to exclude statutory employment discrimination claims from its arbitration forum unless all parties agreed to the arbitration after the claim arose.[28] On October 14, 1998, the Commission approved the NASD's rule change altering the system for selecting arbitrators by substituting for the current system of administrative appointment of arbitrators by NASD staff a new system whereby parties are provided with lists of arbitrators that they may rank by preference.[29] Recently, the Commission approved an NASD rule proposal to increase NASD

[26] Exchange Act Release No. 41110 (February 25, 1999) [64 FR 11124].

[27] Exchange Act Release No. 40109 (June 22, 1998) [63 FR 35299].

[28] Exchange Act Release No. 40858 (December 29, 1998) [64 FR 1051]. Commission staff is working with the regional exchanges to assure conforming changes to their rules. In December 1998, the Commission approved proposals substantially similar to the NYSE's filed by the Boston Stock Exchange and Chicago Stock Exchange. Exchange Act Release No. 40861 (December 29, 1998) [64 FR 1039] (Boston); Exchange Act Release No. 40873 (December 31, 1998) [64 FR 1253] (Chicago).

[29] Exchange Act Release No. 40556 (October 14, 1998) [63 FR 56957].

Regulation's arbitration fees and the honoraria it pays its arbitrators.[30]

The NASD filings resulted in part from its work with the Securities Industry Conference on Arbitration (''SICA''). The participants are likely to address some or all of the above proposed changes in the securities arbitration process.

F. Day Trading

''Day trading'' has been in the news a great deal recently. A ''day trader'' can be loosely defined as someone who buys and sells stocks during the day, often within minutes, hoping to take profitable advantage of intraday swings in share prices. What particularly distinguishes a day trader from a more typical retail investor is that he or she, generally, will (1) not carry a position overnight; (2) try to make money on the ''spreads'' between the bids and offers; (3) trade through automatic order execution systems, and not on-line through the Internet, in order to obtain nearly instantaneous order execution; (4) look at historical buying patterns in order to determine if the stock is most actively sought during certain hours of the day, times of the year, etc., rather than looking at a company's fundamentals or growth prospects; (5) have the mind set of a ''trader'' rather than a long term investor; and (6) focus on trading in volatile stocks.

The Commission is looking carefully at the activity of firms that facilitate day trading. Areas that the Commission is looking into include: (1) Activities that may require broker-dealer or investment adviser registration with the Commission, or that may require registration with the Commission of sales of shares of day trading accounts or firms; (2) compliance by day trading firms with margin and short sale rules, including loans made to customers; (3) capital requirements; (4) the manner in which client funds are used; and (5) suitability requirements.

In early 1998, NASAA formed a task force to examine day trading. The work of the task force is ongoing. The participants are likely to address the task force's work.

G. Migration of Rogue Brokers

The federal securities laws do not currently prevent persons subject to disciplinary findings by state securities and insurance commissions, and federal banking agencies,[31] from entering the securities industry (and vice-versa). A 1994 General Accounting Office (''GAO'') study raised similar concerns about the migration of unscrupulous brokers into the financial services industry, such as banking and insurance.[32] The GAO recommended that the Department of Treasury work with the Commission and other financial regulators to (1) increase disclosure of CRD information so that regulators can consider a broker's disciplinary history in allocating examination resources and employers can use the information in making hiring decisions and (2) determine whether legislation or additional reciprocal agreements between the Commission and other financial regulators are necessary to prevent the migration of unscrupulous brokers to other financial services industries.

In 1996, the Commission's staff met with representatives from the NASD, NASAA, and the National Association of Insurance Commissioners (''NAIC''), to discuss steps that could be taken to stem the migration of unscrupulous brokers. At that meeting, it was agreed that an important first step would be to complete the ongoing CRD modernization project. The participants also discussed ways for additional regulatory authorities to obtain access to the insurance industry's Producer Information Network (''PIN'').[33]

The participants are likely to discuss the CRD modernization program and other avenues of information sharing between federal and state securities, insurance and banking regulators in order to address the possible migration of unscrupulous brokers.

Similarly, the group also expects to discuss whether it would be appropriate to amend the Exchange Act, to make persons subject to a ''statutory disqualification'' [34] if they have been found by a state securities or insurance commission, or state or federal banking agency, to have committed certain fraudulent acts or violated the statutes enforced by these agencies.

H. Year 2000

The Commission has been very active in addressing the potential problems for securities industry computer systems as a consequence of the date change on January 1, 2000 (''Year 2000'').

In particular, the Commission adopted rules that require broker-dealers, non-bank transfer agents, and investment advisers to file with the Commission (and, in the case of broker-dealers, with their designated examining authority) reports regarding their Year 2000 efforts.[35] The first reports for broker-dealers and transfer agents were due August 31, 1998; the first reports for investment advisers were due December 7, 1998. The Commission brought enforcement actions against 37 broker-dealers and 9 transfer agents who failed to file the first report or filed it late, while the NASD brought 59 similar actions against broker-dealers.[36]

Broker-dealers and non-bank transfer agents are required to file a second report on April 30, 1999; larger broker-dealers and non-bank transfer agents are also required to file a report prepared by an independent public accountant regarding the broker-dealers' and the non-bank transfer agents' processes for preparing for the Year 2000. Investment advisers are required to file a second report on June 7, 1999.[37]

Also during the past year, the Commission has supported the industry's efforts to conduct an industry wide test for Year 2000 problems in March 1999. Commission staff has worked with test organizers and the SROs to identify key test participants. In particular, the Commission has approved new SRO rules that allow the SROs to mandate their member firms conduct Year 2000 testing. Commission staff also meets regularly with the SROs to discuss member readiness for Year 2000 and contingency planning.

Other Commission efforts regarding Year 2000 efforts include a moratorium on the implementation of new Commission rules that require major reprogramming of computer systems by Commission-regulated entities between June 1, 1999 and March 31, 2000 [38] and surveys of Year 2000 remediation efforts

[30] Exchange Act Release No. 41056 (February 16, 1999) [64 FR 10041].

[31] This includes the Comptroller of the Currency, the Board of Governors of the Federal Reserve System, the Federal Deposit Insurance Corporation and the Office of Thrift Supervision.

[32] Securities Markets: Actions Needed to Better Protect Investors Against Unscrupulous Brokers (Letter Report, September 14, 1994, GAO/GGD–94–208).

[33] The NAIC's five year strategic plan, issued in 1993, included the development of a producer database and common insurance/producer licensing procedures. PIN, developed in 1995, is one of the tools to modernize the insurance licensing process. The insurance industry will have access to the Producer Database (''PDB'') through PIN. PDB access will include all non-confidential information such as the states in which a producer is licensed, what type of license is held as well as the status of the license and lines of authority.

[34] Exchange Act Section 3(a)(39).

[35] Exchange Act Release Nos. 40162 and 40163 (July 2, 1998) [63 FR 37668, 37688]; Investment Advisers Act Release No. 1769 (October 1, 1998) [63 FR 54308].

[36] Exchange Act Release No. 40573 and 40574 (October 20, 1998) and 40895 (January 7, 1999).

[37] Exchange Act Release Nos. 40608 (October 28, 1998) [63 FR 59208] and 40587 (October 22, 1998) [63 FR 58630].

[38] Exchange Act Release No. 40377 (August 27, 1998) [63 FR 47051].

at the exchanges, Nasdaq and clearing agencies.

I. Examination Issues

State and federal regulators also will discuss various examination-related issues of mutual interest, including: summits and examination coordination; branch office examinations; micro-cap issues; and day trading.

(3) Investment Management Issues

A. Division of Regulatory Authority

Title III of the 1996 Act amended the Investment Advisers Act of 1940 (''Advisers Act'')[39] to divide regulatory responsibility for investment advisers between the Commission and state securities regulators. The law generally requires advisers that have assets under management of $25 million or more, or that advise registered investment companies, to register with the Commission.[40] Advisers that have assets under management of less than $25 million must register with the appropriate state securities authorities.

On May 15, 1997, the Commission adopted rules to implement this division of regulatory authority,[41] including a requirement that each Commission-registered adviser indicate whether it was eligible for continued registration with the Commission and, if not, withdraw from Commission registration. Approximately 11,800 advisers withdrew from Commission registration and the Commission canceled the registrations of 4,200 advisers that failed to indicate whether they were eligible for continued registration with the Commission.[42] Approximately 8,500 investment advisers are currently registered with the Commission.

The conferees will discuss cooperation between Commission and state adviser programs, including sharing information about past examinations and monitoring advisers switching between federal and state registration.

B. Electronic Filing System

The 1996 Act requires the Commission to establish and maintain a ''readily accessible telephonic or other electronic process'' to receive public inquiries about the disciplinary histories of investment advisers and persons associated with investment advisers.[43] In October 1998, Commission staff announced that they would recommend that the Commission designate NASD Regulation, Inc. (''NASDR'') to operate an electronic investment adviser registration system.[44] This decision was made jointly with a NASAA committee.

The Commission has been working with NASAA, the state securities authorities, and NASDR to develop a one-stop electronic filing system that investment advisers will use to apply for registration with the Commission or the appropriate state securities authorities, and to update their registration. The Commission and state authorities will have access to the resulting database to review adviser registration materials and the database will be available to the public on an Internet web site. Clients and prospective clients of investment advisers will be able to quickly obtain disciplinary and other information about investment advisers and persons associated with investment advisers.

The conferees will discuss the progress to date in creating this new electronic filing system.

C. Revised Registration and Disclosure Forms

The Commission and NASAA are revising the investment adviser registration and disclosure forms. The revised registration form would provide more useful information to the Commission and the state securities regulators. The new disclosure form would require advisers to provide clear and complete disclosures in plain English to clients and prospective clients.

The conferees will consider and discuss ways in which the forms can be made most useful to the Commission and state securities authorities, and clients and prospective clients of investment advisers.

(4) Investor Education and Assistance

The Commission currently pursues a number of programs to educate investors on how to invest wisely and to protect themselves from fraud and abuse. The states and NASAA have a longstanding commitment to investor education, and the Commission intends to complement those efforts to the greatest extent possible. The working group will discuss the following investor education initiatives and potential joint projects:

A. Financial Literacy 2001

In the spring of 1998, NASAA, the NASD, and the Investor Protection Trust (''IPT'') joined forces to launch ''Financial Literacy 2001'' (''FL2001''), an unprecedented $1 million campaign targeting 25,000 high school teachers across America. The goal of FL2001 is to encourage—and make it easier for—teachers in every state to teach the basics on saving and investing. Working together, NASAA, the NASD, and the IPT have developed a state-by-state customized classroom guide and have begun to provide aggressive distribution and teacher training. During the working group session, the states will brief the Commission's staff on the progress of FL2001 and plans for dissemination of the FL2001 program in the coming year.

B. Plain English Update

In January 1998, the Commission approved new rules that require issuers to write the cover page, summary, and risk factors section of prospectuses in plain English. These rules apply to all registration statements filed with the Commission on or after October 1, 1998, and to all mutual fund disclosure statements filed on or after December 1, 1998. During the working group session, the participants will discuss the status of the Commission's plain English initiative.

C. Facts on Saving and Investing Campaign

In the spring of 1998, NASAA and the Commission, in conjunction with the Council of Securities Regulators of the Americas, launched the ''Facts on Saving and Investing Campaign.'' The campaign is an ongoing, grassroots effort to educate individuals about saving, investing, and avoiding financial fraud. Twenty-one countries throughout the Western Hemisphere participated in the campaign's enormously successful kick-off week. In the U.S., campaign partners—including more than thirty government agencies, consumer organizations, and financial industry associations—held educational events and distributed information on saving and investing throughout the country. In the coming year, the campaign plans to target two key audiences—schools and

[39] 15 U.S.C. 80b–1 et seq.

[40] Advisers Act Section 203A(a), 15 U.S.C. 80b–3a. The Advisers Act also provides for registration with the Commission of advisers that have their principal office and place of business in a state that has not enacted an investment adviser statute (currently, Wyoming), or that have their principal office and place of business outside the United States. In addition, the Commission has adopted rules exempting five categories of investment advisers from the prohibition on registration with the Commission. See Rule 203A–2, 17 CFR 275.203A–2.

[41] Investment Advisers Act Rel. No. 1633 (May 15, 1997) [62 FR 28112].

[42] The Commission published a Notice of Intention to Cancel Registrations of Certain Investment Advisers on March 9, 1998. See Investment Advisers Act Rel. No. 1705 [63 FR 12526].

[43] 1996 Act Section 306.

[44] SEC News Release 98–120.

the workplace. During the working group session, participants will discuss the campaign and future campaign initiatives. The group also will discuss other initiatives for international investor education.

D. New Investor Education Programs

Participants in the working group session will brainstorm ideas for new investor education programs, including joint NASAA and Commission initiatives.

E. Investor Education Resources

Participants in the working group session will assess existing resources for investor education—including brochures, videotapes, online materials, and other media—and identify gaps. Conferees also will discuss the most efficient and effective ways to provide educational resources to individuals at the grassroots level.

(5) Enforcement Issues

In addition to the above topics, state and federal regulators will discuss various enforcement-related issues which are of mutual interest.

(6) General

There are a number of matters which are applicable to all, or a number, of the areas noted above. These include EDGAR, the Commission's electronic disclosure system, rulemaking procedures, training and education of staff examiners and analysts and sharing of information.

The Commission and NASAA request specific public comments and recommendations on the above-mentioned topics. Commenters should focus on the agenda but may also discuss or comment on other proposals which would enhance uniformity in the existing scheme of state and federal regulation, while helping to maintain high standards of investor protection.

Dated: March 31, 1999.

By the Commission.

Margaret H. McFarland,

Deputy Secretary.

[FR Doc. 99–8515 Filed 4–6–99; 8:45 am]

BILLING CODE 8010–01–P

SMALL BUSINESS ADMINISTRATION

Request for Proposal for the Drug-Free Workplace Demonstration Program

AGENCY: U.S. Small Business Administration.

ACTION: Request for Proposal.

SUMMARY: The U.S. Small Business Administration (SBA) plans to issue request for proposal (RFP) no. SBDC–99–0001 to invite applications from eligible intermediaries in accordance with the Drug-Free Workplace Act of 1998 (Act). The authorizing legislation is the Small Business Act, Section 21(c)(3)(T) and Section 27, 15 U.S.C. 648(c)(3)(T) and 654, (Title IX of Pub. L. 105–277).

The Act permits the SBA to make grants to eligible intermediaries for the purpose of providing financial and technical assistance to small businesses seeking to establish drug-free workplace programs. In establishing these DFWP programs, as contemplated by the Act, eligible intermediaries should provide outreach to the small business community and provide additional voluntary education for parents. Outreach must include educating small businesses on the benefits of a drug-free workplace and encouraging small business employers and employees to participate in drug-free workplace programs. Education for parents must include teaching them how to keep their children drug-free.

All applicants must meet the definition of ''Eligible Intermediary'' as defined in the Act. Any applicants not meeting the definition will be considered non-responsive and their proposals will not be technically evaluated. The Act defines ''Eligible Intermediary'' as an organization that:

1. has at least two years of experience in carrying out drug-free workplace programs;

2. has a drug-free workplace policy in effect;

3. is located in a State, the District of Columbia, or a territory of the United States; *and*

4. has as its purpose the development of comprehensive drug-free workplace programs, or supplying drug-free workplace services, or providing other forms of assistance and services to small businesses.

SBA is looking for applications that include innovative and creative approaches to address the Drug-Free Workplace Act of 1998. The grants should be viewed as an opportunity to develop a community-wide collaborative effort in which a plan for a system of action aimed at reducing drug abuse in small businesses can serve as a national demonstration model.

SBA will select successful applicants through a competitive process. Evaluation criteria will be included in the RFP. The successful applicants will receive a 12-month grant award to provide financial and technical assistance to small businesses seeking to implement drug-free workplace programs.

DATES: SBA will mail the RFP to interested parties between mid and late April 1999. The closing date will be 30 days later. SBA Headquarters must receive the applications/proposals by the date and time that will be specified in the RFP.

FOR FURTHER INFORMATION CONTACT: Joan Bready, Office of Small Business Development Centers, SBA, at (202) 205–7384 or Mina Wales, Office of Procurement and Grants Management, SBA, at (202) 205–7080.

Dated: April 1, 1999.

Johnnie Albertson,

Associate Administrator, Small Business Development Centers.

[FR Doc. 99–8531 Filed 4–6–99; 8:45 am]

BILLING CODE 8025–01–P

SMALL BUSINESS ADMINISTRATION

[License No. 05/05–5210]

Cactus Capital Company; Notice of Surrender of License

Notice is hereby given that Cactus Capital Company, 6660 N. High Street, #1B, Worthington, Ohio 43085, has surrendered its license to operate as a small business investment company under the Small Business Investment Act of 1958, as amended (the Act). Cactus Capital Company was licensed by the Small Business Administration on September 22, 1989.

Under the authority vested by the Act and pursuant to the regulations promulgated thereunder, the surrender was effective as of February 28, 1999, and accordingly, all rights, privileges, and franchises derived therefrom have been terminated. (Catalog of Federal Domestic Assistance Program No. 59.011, Small Business Investment Companies).

Dated: March 30, 1999.

Don A. Christensen,

Associate Administrator for Investment.

[FR Doc. 99–8532 Filed 4–6–99; 8:45 am]

BILLING CODE 8025–01–P

SMALL BUSINESS ADMINISTRATION

Southeastern States Regional Fairness Board Public Hearing

The Small Business Administration Region IV Heartland States Regional Fairness Board located in the geographical area of Omaha, Nebraska, will hold a public meeting at 12:30 p.m. on Friday, June 11, 1999 at the Executive West Hotel-Drinkwater Room,

830 Phillips Lane, Louisville, KY 40209. To receive comments and testimony from small businesses and representatives of trade associations concerning regulatory enforcement or compliance taken by federal agencies.

Transcripts of these proceedings will be posted on the Internet. These transcripts are subject only to limited review by the National Ombudsman.

For further information, write or call, Gary P. Peele (312) 353–0880.

Shirl Thomas,

Director, Office of External Affairs.

[FR Doc. 99–8535 Filed 4–6–99; 8:45 am]

BILLING CODE 8025–01–P

SMALL BUSINESS ADMINISTRATION

Region II Advisory Council Meeting; Public Meeting

The U.S. Small Business Administration Region II Advisory Council located in the geographical area of Buffalo, New York, will hold a public meeting at 10:00 a.m. on April 28, 1999, at the Protocol Restaurant 6766 Transit Road, Williamsville, New York, to discuss matters that may be presented by members of the Advisory Council, staff of the U.S. Small Business Administration or others present.

For further information, write or call Franklin J. Sciortino, District Director, (716) 551–4301, U.S. Small Business Administration, Room 1311, 111 West Huron Street, Buffalo, New York 14202.

Shirl Thomas,

Director of External Affairs.

[FR Doc. 99–8533 Filed 4–6–99; 8:45 am]

BILLING CODE 8025–01–P

SMALL BUSINESS ADMINISTRATION

Heartland States Regional Fairness Board Public Hearing

The Small Business Administration Region VI Heartland States Regional Fairness Board located in the geographical area of Omaha, Nebraska, will hold a public meeting at 1:00 p.m. on Tuesday, May 11, 1999 at the Greater Omaha Chamber of Commerce, 1301 Harney, Omaha, NE 68102. The space is being donated by the Chamber of Commerce. To receive comments and testimony from small businesses and representatives of trade associations concerning regulatory enforcement or compliance taken by federal agencies.

Transcripts of these proceedings will be posted on the Internet. These transcripts are subject only to limited review by the National Ombudsman.

For further information, write or call, Gary P. Peele (312) 353–0880.

Shirl Thomas,

Director, Office of External Affairs.

[FR Doc. 99–8534 Filed 4–6–99; 8:45 am]

BILLING CODE 8025–01–P

SMALL BUSINESS ADMINISTRATION

Reporting and Recordkeeping Requirements Under OMB Review

AGENCY: Small Business Administration.

ACTION: Notice of Reporting Requirements Submitted for OMB Review.

SUMMARY: Under the provisions of the Paperwork Reduction Act (44 U.S.C. Chapter 35), agencies are required to submit proposed reporting and recordkeeping requirements to OMB for review and approval, and to publish a notice in the **Federal Register** notifying the public that the agency has made such a submission.

DATES: Submit comments on or before May 7, 1999. If you intend to comment but cannot prepare comments promptly, please advise the OMB Reviewer and the Agency Clearance Officer before the deadline.

COPIES: Request for clearance (OMB 83–1), supporting statement, and other documents submitted to OMB for review may be obtained from the Agency Clearance Officer.

ADDRESSES: Address all comments concerning this notice to: *Agency Clearance Officer*, Jacqueline White, Small Business Administration, 409 3rd Street, SW, 5th Floor, Washington, DC 20416; and *OMB Reviewer*, Office of Information and Regulatory Affairs, Office of Management and Budget, New Executive Office Building, Washington, DC 20503.

FOR FURTHER INFORMATION CONTACT: Jacqueline White, Agency Clearance Officer, (202) 205–6629.

SUPPLEMENTARY INFORMATION:

Title: Title VII Study and Report.

Form No: 2107.

Frequency: On Occasion.

Description of Respondents: Service-Disabled Veterans who own and operate Small Businesses

Annual Responses: 3,000.

Annual Burden: 2,000.

Dated: March 29, 1999.

Jacqueline White,

Chief, Administrative Information Branch.

[FR Doc. 99–8530 Filed 4–6–99; 8:45 am]

BILLING CODE 8025–01–P

SOCIAL SECURITY ADMINISTRATION

Agency Information Collection Activities: Proposed Request and Comment Request

I. In compliance with Pub. L. 104–13, the Paperwork Reduction Act of 1995, SSA is providing notice of its information collection packages that require submission to the Office of Management and Budget (OMB). SSA is soliciting comments on the accuracy of the agency's burden estimate; the need for the information; its practical utility; ways to enhance its quality, utility and clarity; and on ways to minimize burden on respondents, including the use of automated collection techniques or other forms of information technology.

The information collections, listed below, will be submitted to OMB within 60 days from the date of this notice. Comments and recommendations regarding the information collections would be most useful if received by the Agency within 60 days from the date of this publication. Comments should be directed to the SSA Reports Clearance Officer at the address listed at the end of this notice.

1. Coverage of Employees of State and Local Governments—20 CFR Part 404—0960–0425. This current rule contains reporting and recordkeeping requirements in 20 CFR Part 404 (see table below). The regulation sections cited require State and/or interstate instrumentalities to provide certain information to SSA that is needed to extend Social Security coverage to public sector workers for pre-1987 tax years, and to maintain accurate records of social security agreements. SSA would not be able to provide coverage to these workers and would be in violation of the statute requiring coverage if the information was not collected.

This rule applies to 52 state agencies who could submit modifications to their Social Security coverage agreements and 3 interstate instrumentalities who could submit agreements for coverage, and one annual response for each. In actuality, SSA may receive any number of reports from a few States and no reports from the remainder. From past experience, SSA anticipates that no error modifications will be filed for tax years prior to 1987, nor wage reports and contributions payments for an error situation where wages have never been reported for those years. In addition, the reporting requirements in sections 404.1242, .1251 and .1271(a)& (c) no longer exist so we are showing no public reporting burden for these sections. SSA plans to publish a Notice

of Proposed Rulemaking to eliminate the obsolete reporting requirements from these sections. For the remaining sections, SSA is basing the public burden estimates on the total number of respondents that could potentially report to us, although we anticipate the actual number will be less.

Section	Number of States	Frequency of response	Individual burden	Annual burden (in hours)
404.1203(a)	52	1	1 hour	52
404.1204(a) & (b)	52	1	30 minutes	26
404.1214(d)	[1] 3	1	1 hour	3
404.1215	52	1	1 hour	52
404.1216(a) & (b)	52	1	1 hour	52
404.1220(b) & (c)	52	1	5 minutes	4
404.1225(a) & (b)	52	1	1 hour	52
404.1237(a), (b) & (c); .1239; .1243(a), (b), (c)	52	1	1 hour	52
404.1242	0	0	0	0
404.1247	52	1	1 hour	52
404.1249(a), (b) &(c)	52	52	1 hour	52
404.1251	0	0	0	0
404.1265	3	1	1 hour	3
404.1271(a) & (c)	0	0	hour	0
404.1271(b)	2	2	4 hours	16
404.1272	3	1	1	3
404.1292	3	1	5	15
Total				434

[1] Interstate Instrumentalities.

2. Current Rule Regarding Continuation of Full Benefit Standard for Persons Institutionalized—0960–0516. The information collected by the Social Security Administration will be used to determine if a recipient of Supplemental Security Income benefits, who is temporarily institutionalized, is eligible to receive a full benefit. The respondents will be such recipients and their physicians.

Number of Respondents: 60,000.

Frequency of Response: 1.

Average Burden Per Response: 5 minutes.

Estimated Average Burden: 5,000 hours.

II. The information collection listed below has been submitted to OMB for clearance. Written comments and recommendations on the information collection would be most useful if received within 30 days from the date of this publication. Comments should be directed to the SSA Reports Clearance Officer and the OMB Desk Officer at the addresses listed at the end of this notice. You can obtain a copy of the OMB clearance package by calling the SSA Reports Clearance Officer on (410) 965–4145, or by writing to him.

Statement Regarding the Inferred Death of an Individual by Reason of Continued and Unexplained Absence-0960–0002. The information collected on form SSA–723 is used to determine if the Social Security Administration may infer that a missing person is deceased. The respondents are individuals who know or are related to the missing person.

Number of Respondents: 3,000.

Frequency of Response: 1.

Average Burden Per Response: 30 minutes.

Estimated Average Burden: 1,500 hours.

SSA Address: Social Security Administration, DCFAM, Attn: Frederick W. Brickenkamp, 6401 Security Blvd., 1–A–21 Operations Bldg., Baltimore, MD 21235.

OMB Address: Office of Management and Budget, OIRA, Attn: Lori Schack, New Executive Office Building, Room 10230, 725 17th St., NW, Washington, D.C. 20503.

Dated: March 31, 1999.

Frederick W. Brickenkamp,

Reports Clearance Officer, Social Security Administration.

[FR Doc. 99–8508 Filed 4–6–99; 8:45 am]

BILLING CODE 4190–29–P

DEPARTMENT OF STATE

Office of the Deputy Assistant Secretary for Energy, Sanctions, and Commodities

[Public Notice 3023]

Receipt of Application for a Presidential Permit for Pipeline Facilities To Be Converted To Crude Oil Service on the Border of the United States

AGENCY: Department of State.

SUMMARY: The Department of State has received an application from Portland Pipe Line Corporation requesting a Presidential permit, pursuant to Executive Order 11423 of August 16, 1968, as amended by Executive Order 12847 of May 17, 1993, authorizing Portland to return to crude oil service an existing 18-inch pipeline, and to connect, operate and maintain this pipeline crossing the international boundary between the United States and Canada at a point near North Troy, Vermont. The pipeline has been operated in interstate natural gas transmission service by Granite State Gas Transmission, Inc. under a lease from Portland Pipe Line Corporation since 1987. Portland Pipe Line Corporation is a Maine corporation with its principal place of business in South Portland, Maine. The applicant proposes to return the pipeline to crude oil service no later than October 1, 1999.

DATES: Interested parties are invited to submit, in duplicate, comments relative to this proposal on or before May 15, 1999.

FOR FURTHER INFORMATION CONTACT: Matthew McManus, Division Chief, Energy Producing Countries, Department of State, Washington, DC. 20520. (202) 647–4557.

Matthew McManus,

Division Chief, Energy Producing Countries, Bureau of Economic and Business Affairs.

[FR Doc. 99–8617 Filed 4–6–99; 8:45 am]

BILLING CODE 4710–07–P

OFFICE OF THE U.S. TRADE REPRESENTATIVE

Identification of Priority Foreign Country Practices and Foreign Countries Engaging in Discriminatory Procurement Practices; Request for Public Comment

AGENCY: Office of the United States Trade Representative.

ACTION: Request for written submissions from the public.

SUMMARY: Executive Order 13116 of March 31, 1999 requires the United States Trade Representative (USTR): to review United States trade expansion priorities and to identify priority foreign country practices, the elimination of which is likely to have the most significant potential to increase United States exports, either directly or through the establishment of a beneficial precedent; and to identify foreign countries engaging in discriminatory government procurement practices. USTR is requesting written submissions from the public concerning practices that should be considered by the USTR for these purposes.

DATES: Submissions must be received by 12:00 noon on April 19, 1999.

ADDRESSES: Office of the U.S. Trade Representative, 600 17th Street, NW, Washington, D.C. 20508.

FOR FURTHER INFORMATION CONTACT: Questions concerning the filing of submissions should be directed to Sybia Harrison, Staff Assistant to Section 301 Committee, (202) 395–3432; legal questions regarding Executive Order 13116 and Super 301 should be addressed to Demetrios Marantis, Assistant General Counsel, (202) 395–9626; and legal questions regarding Title VII should be addressed to Stephen Kho, Assistant General Counsel, (202) 395–3581.

SUPPLEMENTARY INFORMATION: Pursuant to section 310 of the Trade Act of 1974 (referred to as ''Super 301''), Executive Orders 12901 of March 3, 1994 (59 F.R. 10727) and 12973 of September 17, 1995 (60 F.R. 516655), and section 314 of the Uruguay Round Agreements Act, USTR submitted annual reports to the appropriate Congressional committees in calendar years 1989–90 and 1994–97 reviewing U.S. trade expansion priorities and identifying priority foreign country practices, the elimination of which is likely to have the most significant potential to increase U.S. exports. Pursuant to Title VII of the Omnibus Trade and Competitiveness Act of 1988, as amended, the President submitted annual reports to Congress in calendar years 1989–96 identifying foreign countries that failed to comply with their obligations under the Agreement on Government Procurement (GPA) and other government procurement agreements, or otherwise discriminated against U.S. products and services in government procurement.

By Executive Order 13116 of March 31, 1999, the President re-instituted Super 301 and Title VII procedures for calendar years 1999–2001. Part I of Executive Order 13116 requires the USTR, no later than April 30, to review United States trade expansion priorities and identify priority foreign country practices, the elimination of which is likely to have the most significant potential to increase United States exports, either directly or through the establishment of a beneficial precedent. Part II of Executive Order 13116 requires the USTR, no later than April 30, to review and identify other countries' compliance with the GPA and other government procurement agreement obligations, or otherwise maintain, in government procurement, a significant and persistent practice of discrimination against U.S. products or services which results in identifiable harm to United States businesses and whose products or services are acquired in significant amounts by the United States Government. The USTR must submit to the congressional committees of jurisdiction a report on the priority foreign country practices identified under Part I of the Executive Order and on countries identified under Part II of the Executive Order and publish the report(s) in the **Federal Register**. The USTR also may describe in the report(s) foreign country practices that may warrant identification in the future or that were not identified because they are being addressed by provisions under U.S. trade law, existing bilateral trade agreements, or in trade negotiations and progress is being made toward their elimination.

Executive Order 13116 also requires the Trade Representative to initiate investigations under section 302(b)(1) of the Trade Act of 1974 as amended (19 U.S.C. 2412 (b)(1)), no later than 90 days after submission of the report(s), with respect to any of the identified practices that have not been satisfactorily resolved in the interim.

Requirements for Submissions

The USTR invites submissions on priority foreign country practices and countries engaging in discriminatory government procurement practices that should be considered for identification under Executive Order 13116. If the practice was the subject of comments previously submitted in connection with the 1999 National Trade Estimate Report on Foreign Trade Barriers (1999 NTE Report), the present submission should identify the related comments in the NTE public docket and include any additional pertinent information, including information explaining why the practice rises to the level of a ''priority foreign country practice'' within the meaning of Executive Order 13116. If the practice was not the subject of comments submitted in connection with the 1999 NTE Report, the submission should: (1) include information on the nature and significance of the practice; (2) identify the United States product, service, intellectual property right, or foreign direct investment matter which is affected by the practice; and (3) provide any other information considered relevant. Such information may include information on the relevant trade or government procurement agreements to which a foreign country is a party, its compliance with those agreements, and any other information related to the factors set forth in Parts I and II of Executive Order 13116 for identification of priority foreign country practices and countries that engage in discriminatory government procurement practices.

Interested persons must provide twenty copies of any submission, in English, to Sybia Harrison, Staff Assistant to Section 301 Committee, Office of the United States Trade Representative, by noon on April 19, 1999. Because submissions will be placed in a public file, open to public inspection at USTR, business-confidential information should not be submitted. Inspection is by appointment only with the staff of the USTR Public Reading Room and can be arranged by calling Brenda Webb (202) 395–6186. The Reading Room is open to the public from 9:30 a.m. to 12 noon, and from 1 p.m. to 4 p.m., Monday through Friday.

Joanna McIntosh,

Chairman, Section 301 Committee.

[FR Doc. 99–8647 Filed 4–5–99; 8:45 am]

BILLING CODE 3190–U–P

DEPARTMENT OF TRANSPORTATION

Coast Guard

[ALJ 99–0002 CIV]

In the Matter of Ashland, Inc.

AGENCY: United States Coast Guard, DOT.

ACTION: Notice of proposed penalty; opportunity to participate.

SUMMARY: The United States Coast Guard gives notice of the proposed

assessment of a Class II administrative penalty against Ashland Inc. for violations of the Federal Water Pollution Control Act (FWPCA). The alleged violations involve the discharge of approximately 1100 barrels of oil into and upon the waters of the Big Sandy River, Catlettsburg, Kentucky and adjoining navigable waters of the United States on or about December 21, 1997. Interested persons may participate or file comments in this proceeding.

DATES: Filings in this matter must be received no later than May 7, 1999.

ADDRESSES: Interested persons must submit all filings in this proceeding to the Hearing Docket Clerk. Filings should reference ALJ Docket number 99–0002–CIV.

If you file by mail, the address is Hearing Docket Clerk, Administrative Law Judge Docketing Center, United States Coast Guard, 40 South Gay Street, Room 412, Baltimore, Maryland 21202–4022.

If you file by fax, then send to (410) 962–1742.

If you file in person, then deliver the filings to the same address at Room 412 between 8 a.m. and 3 p.m., Monday through Friday, except Federal holidays.

The public may inspect the administrative record for this Class II civil penalty proceeding at the same address and times.

FOR FURTHER INFORMATION CONTACT: Mr. George J. Jordan, Director of Judicial Administration, Office of the Chief Administrative Law Judge, Commandant (G-CJ), U.S. Coast Guard, 2100 Second Street SW., Washington, DC 20593–0001, Telephone (202) 267–2940.

SUPPLEMENTARY INFORMATION: This is a Class II civil penalty proceeding brought under section 311(b) of the Federal Water Pollution Control Act (33 U.S.C. 1251 et seq.), as amended by the Oil Pollution Act of 1990 (33 U.S.C. 1321(b)). The FWPCA requires that the Coast Guard publish notice of the proposed issuance of an order assessing a Class II civil penalty in the **Federal Register**.

If you wish to be an interested person, you must file written comments on the proceeding or written notice of intent to present evidence at any hearing held in this Class II civil penalty proceeding with the Hearing Docket Clerk. You must file no later than May 7, 1999. (33 CFR 20.404).

The following table explains how interested persons may participate in a Class II civil penalty proceeding.

If—	Then—
a hearing is scheduled	You will be given • Notice of any hearing; • A reasonable opportunity to be heard and to present evidence during any hearing; and • Notice and a copy of the decision 33 CFR 20.404
the proceeding is concluded without a hearing.	You may petition the Commandant of the Coast Guard to set aside the order and to provide a hearing. You must file the petition within 30 days after issuance of the administrative law judge's order. 33 CFR 20.1102

You can find the regulations concerning Class II civil penalty proceedings in 33 CFR Part 20.

This proceeding (ALJ Docket Number: 99–0002–CIV) results from an alleged discharge of approximately 1100 barrels of oil into Big Sandy River, Catlettsburg, Kentucky and adjoining navigable waters of the United States on or about December 21, 1997 and the following alleged violations of pollution prevention regulations.

(1) failure to terminate a transfer between the facility and a tank vessel when the person in charge of the vessel departed,

(2) failure to remain with the vessel during a transfer between the tank vessel and the facility;

(3) failure to maintain surveillance of that vessel by using a person who is responsible for the security of the vessel; and,

(4) failure to have a means of communication between the person in charge of the vessel transfer operation and the facility transfer operation.

The Coast Guard filed the Complaint on January 11, 1999 at New Orleans, LA.

The Respondent is Ashland, Inc., 1000 Ashland Drive, Russell, Kentucky 41169.

The Coast Guard seeks a civil penalty of $50,000.

Dated: March 25, 1999.

George J. Jordan,

Director of Judicial Administration, Office of the Chief Administrative, Law Judge, United States Coast Guard.

[FR Doc. 99–8570 Filed 4–6–99; 8:45 am]

BILLING CODE 4910–15–P

DEPARTMENT OF TRANSPORTATION

Coast Guard

[ALJ 99–0003–CIV]

In the Matter of TransAmerican Refining Corp.

AGENCY: Coast Guard, DOT.

ACTION: Notice of proposed penalty; opportunity to participate.

SUMMARY: The Coast Guard gives notice of the proposed assessment of a Class II administrative penalty against TransAmerican Refining Corp. for violations of the Federal Water Pollution Control Act (FWPCA). The alleged violations involve twenty-nine (29) oil transfer operations conducted at an onshore facility located at 15272 River Road, mile 125.5, New Orleans, LA that occurred on or about September 19, 1997 and continued through and including September 24, 1997. Interested persons may participate or file comments in this proceeding.

DATES: Comments must reach the Coast Guard no later than May 7, 1999.

ADDRESSES: You may mail comments to the Hearing Docket Clerk, Administrative Law Judge Docketing Center, United States Coast Guard, 40 South Gay Street, Room 412, Baltimore, Maryland 21202–4022. Comments may also be personally delivered to Room 412 at the same address between 8 a.m. and 3 p.m., Monday through Friday, except Federal holidays. The telephone number is (410) 962–7434. You may also fax your comments to (410) 962–1742.

The Administrative Law Judge Docketing Center maintains the public docket for this matter. Comments will become part of this docket and will be available for inspection or copying in Room 412 at the address listed above.

FOR FURTHER INFORMATION CONTACT: Mr. George J. Jordan, Director of Judicial Administration, Office of the Chief Administrative Law Judge, Commandant (G-CJ), U.S. Coast Guard,

2100 Second Street SW., Washington, DC 20593–0001. The telephone number is (202) 267–2940.

SUPPLEMENTARY INFORMATION:

Request for Comments

The Coast Guard encourages interested persons to submit written comments. Persons submitting comments should include their name, address, identify this document (ALJ 99–0003-CIV), and state the reason for each specific comment. Please submit all comments and attachments in an unbound format on white paper no longer than 8½ by 11 inches, suitable for copying and electronic filing. Persons wanting acknowledgment or receipt of comments should enclose self-addressed, stamped postcards or envelopes.

Discussion

This is a Class II civil penalty proceeding brought under section 311(j) of the Federal Water Pollution Control Act (33 U.S.C. 1251 *et. seq.*) (FWCPA), as amended by the Oil Pollution Act of 1990 (33 U.S.C. 1321(j)). The FWPCA requires the Coast Guard to publish notice of the proposed issuance of an order assessing a Class II civil penalty in the **Federal Register**.

If you wish to be an interested person, you must file written comments on the proceeding or written notice of intent to present evidence at any hearing held in this Class II civil penalty proceeding with the Hearing Docket Clerk.

The following table explains how interested persons may participate in a Class II civil penalty proceeding.

If—	Then—
a hearing is scheduled	You will be given • Notice of any hearing; • A reasonable opportunity to be heard and to present evidence during any hearing; and • Notice and a copy of the decision 33 CFR 20.404
the proceeding is concluded without a hearing.	You may petition the Commandant of the Coast Guard to set aside the order and to provide a hearing. You must file the petition within 30 days after issuance of the administrative law judge's order. 33 CFR 20.1102

You can find the regulations concerning Class II civil penalty proceedings in 33 CFR Part 20.

This proceeding (ALJ 99–0003–CIV) results from 29 oil transfer operations violations that occurred at an onshore facility located at 15272 River Road, mile 125.5, New Orleans, LA on or about September 19, 1997 and continuing through and including September 24, 1997. The Coast Guard alleges that TransAmerican Refining Corp. conducted oil transfer operations without submitting the following items to the Captain of the Port New Orleans:

(1) A letter of intent to transfer oil;

(2) A facility response plan; and

(3) Two (2) copies of an operations manual for examination.

The Coast Guard further alleges that TransAmerican Refining Corp. failed to log the date and time of completion on twenty-nine (29) declarations of inspections and make an examined operations manual available to the person in charge during the oil transfers.

The Coast Guard filed the complaint on March 5, 1999 at New Orleans, LA.

The Respondent is TransAmerican Refining Corporation, Attention: Mr. Burgess E. McCraine, Jr., Campbell, McCraine, Sistrunk, Anzelmo, & Hardy, 3445 North Causeway Blvd, Suite 800, Metairie, LA 70002.

The Coast Guard seeks a civil penalty of $700,000.

Dated: March 25, 1999.

George J. Jordan,

Director of Judicial Administration, Office of the Chief Administrative Law Judge, United States Coast Guard.

[FR Doc. 99–8571 Filed 4–6–99; 8:45 am]

BILLING CODE 4910–15–P

DEPARTMENT OF TRANSPORTATION

Federal Aviation Administration

Notice of Intent To Request Renewal From the Office of Management and Budget (OMB) of Current Public Collections of Information

AGENCY: Federal Aviation Administration (FAA), DOT.

ACTION: Notice.

SUMMARY: In compliance with the Paperwork Reduction Act (44 U.S.C. 3501 *et seq.*) the FAA invites public comment on 4 currently approved public information collections which will be submitted to OMB for renewal.

DATES: Comments must be received on or before June 7, 1999.

ADDRESSES: Comments on any of these collections may be mailed or delivered to the FAA at the following address: Ms. Judith Street, Room 612, Federal Aviation Administration, Standards and Information Division, APF–100, 800 Independence Ave., SW., Washington, DC 20591.

FOR FURTHER INFORMATION CONTACT: Ms. Judith Street at the above address or on (202) 267–9895.

SUPPLEMENTARY INFORMATION: The FAA solicits comments on any of the current collections of information in order to evaluate the necessity of the collection, the accuracy of the agency's estimate of the burden, the quality, utility, and clarity of the information to be collected, and possible ways to minimize the burden of the collection. Following are short synopses of the 4 currently approved public information collection activities, which will be submitted to OMB for review and renewal:

1. 2120–0009, Pilot Schools—FAR 141. The information is required from applicants who wish to be issued pilot school certificates and associated ratings. The number of applicants is estimated to be 860. Part 141 prescribes the requirements for issuing pilot school certificates, provisional pilot school certificates, and associated ratings to qualified applicants. The information on FAA Form 8420–8, Application for Pilot School certificates, is required from applicants who wish to be issued pilot school certificates and associated ratings. Pilot schools train private, commercial, flight instructor, and airline transport pilots, along with training for associated ratings on various types of aircraft. The information from the form is also necessary to assure continuing compliance with Part 141, renewal of certificate every 24 months, and for any amendments to pilot school certificates. The estimated total annual burden is 47,000 hours.

2. 2120–0027, Application for Certificate of Waiver or Authorization.

The respondents are those persons wishing authorization to deviate from certain prescribed regulations. The estimated number of applications is 25,000 with an annual burden of approximately 13,500 hours. This public reporting burden is imposed on persons that have a need to deviate from the provisions of the Federal Aviation Regulations (FAR) that govern use of airspace with the United States. This request also describes the burden associated with authorizations to make parachute jumps.

3. 2120–0507, Development of Major Repair Data. SFAR–36. This SFAR relieves qualifying applicants (aircraft maintenance, commercial aviation, aircraft repair stations, air carriers, air taxi and commercial operators) of the burden of obtaining FAA approval of data developed by them for major repair on a case-by-case basis and provides for one-time approvals. The estimated number of respondents is 20. The estimated annual burden is 500 hours.

4. 2120–0574, Aviation Safety Counselor of the Year Award. There is an estimated 200 people who will nominate a person to be considered for the Aviation Safety Counselor of the Year Award. The estimated total annual burden is 200 hours. This form is used to nominate private citizens for recognition of their volunteer services to the FAA. The agency will use the information on the form to select nine regional winners and one national winner. The respondents are private citizens involved in aviation.

Issued in Washington, DC, on April 1, 1999.

Patricia W. Carter,

Acting Manager, Standards and Information Division, APF–100.

[FR Doc. 99–8646 Filed 4–6–99; 8:45 am]

BILLING CODE 4910–13–M

DEPARTMENT OF TRANSPORTATION

Federal Aviation Administration

Notice of Intent to Rule on Application to Impose and Use the Revenue from a Passenger Facility Charge (PFC) at MBS International Airport, Saginaw, Michigan

AGENCY: Federal Aviation Administration (FAA), DOT.

ACTION: Notice of Intent to Rule on Application.

SUMMARY: The FAA proposes to rule and invites public comment on the application to impose and use the revenue from a PFC at MBS International Airport under the provisions of the Aviation Safety and Capacity Expansion Act of 1990 (Title IX of the Omnibus Budget Reconciliation Act of 1990) (Pub. L. 101–508) and Part 158 of the Federal Aviation Regulations (14 CFR Part 158).

DATES: Comments must be received on or before May 7, 1999.

ADDRESSES: Comments on this application may be mailed or delivered in triplicate to the FAA at the following address: Federal Aviation Administration, Detroit Airports District Office, Willow Run Airport, East, 8820 Beck Road, Belleville, MI 48111.

In addition, one copy of any comments submitted to the FAA must be mailed or delivered to Ms. Elizabeth Owen, Airport Manager of the MBS International Airport, at the following address: MBS International Airport Commission, P.O. Box P, 8500 Garfield Road, Freeland, MI 48623.

Air carriers and foreign air carriers may submit copies of written comments previously provided to the MBS International Airport Commission under section 158.23 of Part 158.

FOR FURTHER INFORMATION CONTACT: Mr. Jon Gilbert, Program Manager, Federal Aviation Administration, Detroit Airports District Office, Willow Run Airport, East, 8820 Beck Road, Belleville, MI 48111 (734–487–7281). The application may be reviewed in person at this same location.

SUPPLMENTARY INFORMATION: The FAA proposes to rule and invites public comment on the application to impose and use the revenue from a PFC at MBS International Airport under the provisions of the Aviation Safety and Capacity Expansion Act of 1990 (Title IX of the Omnibus Budget Reconciliation Act of 1990) (Public Law 101–508) and Part 158 of the Federal Aviation Regulations (14 CFR Part 158).

On March 2, 1999, the FAA determined that the application to impose and use the revenue from a PFC submitted by MBS International Airport Commission was substantially complete within the requirements of § 158.25 of Part 158. The FAA will approve or disapprove the application, in whole or in part, no later than June 11, 1999.

The following is a brief overview of the application.

PFC Application No.: 99–03–C–00–MBS.

Level of the proposed PFC: $3.00.

Proposed charge effective date: January 1, 2000.

Proposed charge expiration date: August 31, 2005.

Total estimated PFC revenue: $4,234,048,000.

Brief description of proposed projects: (1) Acquire SRE plow with sand spreader, (2) Improve airport drainage (Phase I), (3) Primary power/telephone rehabilitation, (4) PFC preparation reimbursement, (5) Y2K compliance testing, (6) Master Plan update, (7) Improve airport drainage (Phase II), (8) Rehabilitate SRE ARFF access road, (9) Acquire SRE plow with dump box, (10) Rehabilitate entrance drive, (11) Rehabilitate service drive, (12) Perimeter fencing, (13) Rehabilitate Taxiway ''C'' and connectors, (14) Rehabilitate Runway 5/23, (15) Rehabilitate Runway 14/32, (16) Rehabilitate Taxiway ''A'', (17) Acquire SRE Snowblower Unit 41, and (18) Acquire SRE Snowblower Unit 20. Class or classes of air carriers which the public agency has requested not be required to collect PFCs: Part 135, Air Taxi/Commercial Operators filing FAA Form 1800–31.

Any person may inspect the application in person at the FAA office listed above under **FOR FURTHER INFORMATION CONTACT**.

In addition, any person may, upon request, inspect the application, notice, and other documents germane to the application in person at the MBS International Airport Commission.

Issued in Des Plaines, Illinois, on March 31, 1999.

Philip M. Smithmeyer,

Acting Manager, Planning/Programming Branch, Airports Division, Great Lakes Region.

[FR Doc. 99–8645 Filed 4–6–99; 8:45 am]

BILLING CODE 4910–13–M

DEPARTMENT OF TRANSPORTATION

Surface Transportation Board

[STB Docket No. AB–33 (Sub-No. 134X)]

Union Pacific Railroad Company—Abandonment and Discontinuance of Trackage Rights Exemption—in Los Angeles County, CA

Union Pacific Railroad Company (UP) has filed a notice of exemption under 49 CFR 1152 Subpart F—*Exempt Abandonments and Discontinuances of Service and Trackage Rights* to abandon a 1.44-mile line of railroad on the Lincoln Park Drill (the Line) from milepost 486.30 near State Street to the end of the line at milepost 487.74 near Lincoln Park, and for discontinuance of overhead trackage rights over a 0.8-mile line of the Southern California Regional Rail Authority's (SCRRA Track) San Gabriel Subdivision from milepost 485.30 to milepost 486.10 near State Street, in Los Angeles County, CA. The

line traverses United States Postal Service Zip Codes 90032 and 90033.[1]

UP has certified that: (1) no local traffic has moved over the Line for at least 2 years; (2) there has been no overhead traffic on the SCRRA track during the past 2 years and any overhead traffic could be rerouted over other lines; (3) no formal complaint filed by a user of rail service on the line (or by a state or local government entity acting on behalf of such user) regarding cessation of service over the line either is pending with the Surface Transportation Board (Board) or with any U.S. District Court or has been decided in favor of complainant within the 2-year period; and (4) the requirements at 49 CFR 1105.7 (environmental reports), 49 CFR 1105.8 (historic reports), 49 CFR 1105.11 (transmittal letter), 49 CFR 1105.12 (newspaper publication), and 49 CFR 1152.50(d)(1) (notice to governmental agencies) have been met.

As a condition to this exemption, any employee adversely affected by the abandonment and discontinuance shall be protected under *Oregon Short Line R. Co.— Abandonment—Goshen,* 360 I.C.C. 91 (1979). To address whether this condition adequately protects affected employees, a petition for partial revocation under 49 U.S.C. 10502(d) must be filed. Provided no formal expression of intent to file an offer of financial assistance (OFA) has been received, this exemption will be effective on May 7, 1999, unless stayed pending reconsideration. Petitions to stay that do not involve environmental issues,[2] formal expressions of intent to file an OFA under 49 CFR 1152.27(c)(2),[3] and trail use/rail banking requests under 49 CFR 1152.29 must be filed by April 19, 1999. Petitions to reopen or requests for public use conditions under 49 CFR 1152.28 must be filed by April 27, 1999, with: Surface Transportation Board, Office of the Secretary, Case Control Unit, 1925 K Street, NW, Washington, DC 20423.

A copy of any petition filed with the Board should be sent to applicant's representative: Joseph D. Anthofer, General Attorney, Union Pacific Railroad Company, 1416 Dodge Street, Room 830, Omaha, NE 68179.

If the verified notice contains false or misleading information, the exemption is void *ab initio.*

UP has filed an environmental report which addresses the effects, if any, of the abandonment and discontinuances on the environment and historic resources. The Section of Environmental Analysis (SEA) will issue an environmental assessment (EA) by April 12, 1999. Interested persons may obtain a copy of the EA by writing to SEA (Room 500, Surface Transportation Board, Washington, DC 20423) or by calling SEA, at (202) 565–1545. Comments on environmental and historic preservation matters must be filed within 15 days after the EA becomes available to the public.

Environmental, historic preservation, public use, or trail use/rail banking conditions will be imposed, where appropriate, in a subsequent decision.

Pursuant to the provisions of 49 CFR 1152.29(e)(2), UP shall file a notice of consummation with the Board to signify that it has exercised the authority granted and fully abandoned its line. If consummation has not been effected by UP's filing of a notice of consummation by April 7, 2000, and there are no legal or regulatory barriers to consummation, the authority to abandon will automatically expire.

Board decisions and notices are available on our website at ''WWW.STB.DOT.GOV.''

Decided: March 31, 1999.

By the Board, David M. Konschnik, Director, Office of Proceedings.

Vernon A. Williams,

Secretary.

[FR Doc. 99–8326 Filed 4–6–99; 8:45 am]

BILLING CODE 4915–00–P

[1] UP states that the SCRRA Track will continue to be operated by SCRRA.

[2] The Board will grant a stay if an informed decision on environmental issues (whether raised by a party or by the Board's Section of Environmental Analysis in its independent investigation) cannot be made before the exemption's effective date. *See Exemption of Out-of-Service Rail Lines,* 5 I.C.C.2d 377 (1989). Any request for a stay should be filed as soon as possible so that the Board may take appropriate action before the exemption's effective date.

[3] Each offer of financial assistance must be accompanied by the filing fee, which currently is set at $1000. *See* 49 CFR 1002.2(f)(25).

DEPARTMENT OF THE TREASURY

Internal Revenue Service

[FI–28–96]

Proposed Collection; Comment Request for Regulation Project

AGENCY: Internal Revenue Service (IRS), Treasury.

ACTION: Notice and request for comments.

SUMMARY: The Department of the Treasury, as part of its continuing effort to reduce paperwork and respondent burden, invites the general public and other Federal agencies to take this opportunity to comment on proposed and/or continuing information collections, as required by the Paperwork Reduction Act of 1995, Public Law 104–13 (44 U.S.C. 3506(c)(2)(A)). Currently, the IRS is soliciting comments concerning an existing final regulation, FI–28–96 (TD 8801), Arbitrage Restrictions on Tax-Exempt Bonds (§ 1.148–5).

DATES: Written comments should be received on or before June 7, 1999 to be assured of consideration.

ADDRESSES: Direct all written comments to Garrick R. Shear, Internal Revenue Service, room 5571, 1111 Constitution Avenue NW., Washington, DC 20224.

FOR FURTHER INFORMATION CONTACT: Requests for additional information or copies of the regulation should be directed to Carol Savage, (202) 622–3945, Internal Revenue Service, room 5569, 1111 Constitution Avenue NW., Washington, DC 20224.

SUPPLEMENTARY INFORMATION:

Title: Arbitrage Restrictions on Tax-Exempt Bonds.

OMB Number: 1545–1490.

Regulation Project Number: FI–28–96.

Abstract: This regulation provides guidance concerning the arbitrage restrictions applicable to tax-exempt bonds issued by state and local governments and contains rules regarding the use of proceeds of state and local bonds to acquire higher yielding investments. The regulation provides safe harbors for establishing the fair market value of all investments purchased for yield restricted defeasance escrows. Further, the regulation requires that issuers must retain certain records and information with the bond documents. The recordkeeping requirements are necessary for the IRS to determine that an issuer of tax-exempt bonds has not paid more than fair market value for nonpurpose investments under section 148 of the Internal Revenue Code.

Current Actions: There is no change to this existing regulation.

Type of Review: Extension of a currently approved collection.

Affected Public: State, local, or tribal governments, and not-for-profit institutions.

Estimated Number of Respondents: 1,400.

Estimated Time Per Respondent: 1 hour.

Estimated Total Annual Burden Hours: 1,425.

The following paragraph applies to all of the collections of information covered by this notice:

An agency may not conduct or sponsor, and a person is not required to respond to, a collection of information

unless the collection of information displays a valid OMB control number. Books or records relating to a collection of information must be retained as long as their contents may become material in the administration of any internal revenue law. Generally, tax returns and tax return information are confidential, as required by 26 U.S.C. 6103.

Request for Comments

Comments submitted in response to this notice will be summarized and/or included in the request for OMB approval. All comments will become a matter of public record. Comments are invited on: (a) Whether the collection of information is necessary for the proper performance of the functions of the agency, including whether the information shall have practical utility; (b) the accuracy of the agency's estimate of the burden of the collection of information; (c) ways to enhance the quality, utility, and clarity of the information to be collected; (d) ways to minimize the burden of the collection of information on respondents, including through the use of automated collection techniques or other forms of information technology; and (e) estimates of capital or start-up costs and costs of operation, maintenance, and purchase of services to provide information.

Approved: April 1, 1999.

Garrick R. Shear,

IRS Reports Clearance Officer.

[FR Doc. 99–8639 Filed 4–6–99; 8:45 am]

BILLING CODE 4830–01–U

DEPARTMENT OF THE TREASURY

Internal Revenue Service

Proposed Collection; Comment Request for Form 2555

AGENCY: Internal Revenue Service (IRS), Treasury.

ACTION: Notice and request for comments.

SUMMARY: The Department of the Treasury, as part of its continuing effort to reduce paperwork and respondent burden, invites the general public and other Federal agencies to take this opportunity to comment on proposed and/or continuing information collections, as required by the Paperwork Reduction Act of 1995, Public Law 104–13 (44 U.S.C. 3506(c)(2)(A)). Currently, the IRS is soliciting comments concerning Form 2555, Foreign Earned Income.

DATES: Written comments should be received on or before June 7, 1999 to be assured of consideration.

ADDRESSES: Direct all written comments to Garrick R. Shear, Internal Revenue Service, room 5571, 1111 Constitution Avenue NW., Washington, DC 20224.

FOR FURTHER INFORMATION CONTACT: Requests for additional information or copies of the form and instructions should be directed to Faye Bruce, (202) 622–6665, Internal Revenue Service, room 5577, 1111 Constitution Avenue NW., Washington, DC 20224.

SUPPLEMENTARY INFORMATION:

Title: Foreign Earned Income.

OMB Number: 1545–0067.

Form Number: 2555.

Abstract: Form 2555 is filed by U.S. citizens and resident aliens who qualify for the foreign earned income exclusion and/or the foreign housing exclusion or deduction. This information is used by the IRS to determine if a taxpayer qualifies for the exclusion(s) or deduction.

Current Actions: There are no changes being made to the form at this time.

Type of Review: Extension of a currently approved collection.

Affected Public: Individuals or households.

Estimated Number of Respondents: 181,626.

Estimated Time Per Respondent: 3 hrs., 53 min.

Estimated Total Annual Burden Hours: 704,709.

The following paragraph applies to all of the collections of information covered by this notice:

An agency may not conduct or sponsor, and a person is not required to respond to, a collection of information unless the collection of information displays a valid OMB control number. Books or records relating to a collection of information must be retained as long as their contents may become material in the administration of any internal revenue law. Generally, tax returns and tax return information are confidential, as required by 26 U.S.C. 6103.

Request for Comments

Comments submitted in response to this notice will be summarized and/or included in the request for OMB approval. All comments will become a matter of public record. Comments are invited on: (a) Whether the collection of information is necessary for the proper performance of the functions of the agency, including whether the information shall have practical utility; (b) the accuracy of the agency's estimate of the burden of the collection of information; (c) ways to enhance the quality, utility, and clarity of the information to be collected; (d) ways to minimize the burden of the collection of information on respondents, including through the use of automated collection techniques or other forms of information technology; and (e) estimates of capital or start-up costs and costs of operation, maintenance, and purchase of services to provide information.

Approved: March 31, 1999.

Garrick R. Shear,

IRS Reports Clearance Officer.

[FR Doc. 99–8640 Filed 4–6–99; 8:45 am]

BILLING CODE 4830–01–U

DEPARTMENT OF THE TREASURY

Internal Revenue Service

Proposed Collection; Comment Request for Form 8814

AGENCY: Internal Revenue Service (IRS), Treasury.

ACTION: Notice and request for comments.

SUMMARY: The Department of the Treasury, as part of its continuing effort to reduce paperwork and respondent burden, invites the general public and other Federal agencies to take this opportunity to comment on proposed and/or continuing information collections, as required by the Paperwork Reduction Act of 1995, Public Law 104–13 (44 U.S.C. 3506(c)(2)(A)). Currently, the IRS is soliciting comments concerning Form 8814, Parents' Election To Report Child's Interest and Dividends.

DATES: Written comments should be received on or before June 7, 1999 to be assured of consideration.

ADDRESSES: Direct all written comments to Garrick R. Shear, Internal Revenue Service, Room 5571, 1111 Constitution Avenue NW., Washington, DC 20224.

FOR FURTHER INFORMATION CONTACT: Requests for additional information or copies of the form and instructions should be directed to Faye Bruce, (202) 622–6665, Internal Revenue Service, Room 5577, 1111 Constitution Avenue NW., Washington, DC 20224.

SUPPLEMENTARY INFORMATION:

Title: Parents' Election To Report Child's Interest and Dividends.

OMB Number: 1545–1128.

Form Number: 8814.

Abstract: Form 8814 is used by parents who elect to report the interest and dividend income of their child under age 14 on their own tax return. If this election is made, the child is not required to file a return.

Current Actions: There are no changes being made to Form 8814 at this time.

Type of Review: Extension of a currently approved collection.

Affected Public: Individuals or households.

Estimated Number of Respondents: 1,100,000.

Estimated Time Per Respondent: 53 min.

Estimated Total Annual Burden Hours: 979,000.

The following paragraph applies to all of the collections of information covered by this notice:

An agency may not conduct or sponsor, and a person is not required to respond to, a collection of information unless the collection of information displays a valid OMB control number. Books or records relating to a collection of information must be retained as long as their contents may become material in the administration of any internal revenue law. Generally, tax returns and tax return information are confidential, as required by 26 U.S.C. 6103.

Request for Comments

Comments submitted in response to this notice will be summarized and/or included in the request for OMB approval. All comments will become a matter of public record. Comments are invited on: (a) Whether the collection of information is necessary for the proper performance of the functions of the agency, including whether the information shall have practical utility; (b) the accuracy of the agency's estimate of the burden of the collection of information; (c) ways to enhance the quality, utility, and clarity of the information to be collected; (d) ways to minimize the burden of the collection of information on respondents, including through the use of automated collection techniques or other forms of information technology; and (e) estimates of capital or start-up costs and costs of operation, maintenance, and purchase of services to provide information.

Approved: March 31, 1999.

Garrick R. Shear,

IRS Reports Clearance Officer.

[FR Doc. 99–8641 Filed 4–6–99; 8:45 am]

BILLING CODE 4830–01–U

DEPARTMENT OF THE TREASURY

Internal Revenue Service

Proposed Collection; Comment Request for Form 6251

AGENCY: Internal Revenue Service (IRS), Treasury.

ACTION: Notice and request for comments.

SUMMARY: The Department of the Treasury, as part of its continuing effort to reduce paperwork and respondent burden, invites the general public and other Federal agencies to take this opportunity to comment on proposed and/or continuing information collections, as required by the Paperwork Reduction Act of 1995, Public Law 104–13 (44 U.S.C. 3506(c)(2)(A)). Currently, the IRS is soliciting comments concerning Form 6251, Alternative Minimum Tax—Individuals.

DATES: Written comments should be received on or before June 7, 1999 to be assured of consideration.

ADDRESSES: Direct all written comments to Garrick R. Shear, Internal Revenue Service, room 5571, 1111 Constitution Avenue NW., Washington, DC 20224.

FOR FURTHER INFORMATION CONTACT: Requests for additional information or copies of the form and instructions should be directed to Faye Bruce, (202) 622–6665, Internal Revenue Service, Room 5577, 1111 Constitution Avenue NW., Washington, DC 20224.

SUPPLEMENTARY INFORMATION:

Title: Alternative Minimum Tax—Individuals.

OMB Number: 1545–0227.

Form Number: 6251.

Abstract: Form 6251 is used by individuals with adjustments, tax preference items, taxable income above certain exemption amounts, or certain credits to compute the alternative minimum tax, which is added to regular tax. The information on Form 6251 is used by the IRS to verify that the taxpayer correctly figured the tax.

Current Actions: There are no changes being made to Form 6251 at this time.

Type of Review: Extension of a currently approved collection.

Affected Public: Individuals or households.

Estimated Number of Respondents: 414,106.

Estimated Time Per Respondent: 6 hrs., 16 min.

Estimated Total Annual Burden Hours: 2,596,445.

The following paragraph applies to all of the collections of information covered by this notice:

An agency may not conduct or sponsor, and a person is not required to respond to, a collection of information unless the collection of information displays a valid OMB control number. Books or records relating to a collection of information must be retained as long as their contents may become material in the administration of any internal revenue law. Generally, tax returns and tax return information are confidential, as required by 26 U.S.C. 6103.

Request for Comments

Comments submitted in response to this notice will be summarized and/or included in the request for OMB approval. All comments will become a matter of public record. Comments are invited on: (a) Whether the collection of information is necessary for the proper performance of the functions of the agency, including whether the information shall have practical utility; (b) the accuracy of the agency's estimate of the burden of the collection of information; (c) ways to enhance the quality, utility, and clarity of the information to be collected; (d) ways to minimize the burden of the collection of information on respondents, including through the use of automated collection techniques or other forms of information technology; and (e) estimates of capital or start-up costs and costs of operation, maintenance, and purchase of services to provide information.

Approved: March 31, 1999.

Garrick R. Shear,

IRS Reports Clearance Officer.

[FR Doc. 99–8642 Filed 4–6–99; 8:45 am]

BILLING CODE 4830–01–U

DEPARTMENT OF THE TREASURY

Internal Revenue Service

Proposed Collection; Comment Request for Form 8801

AGENCY: Internal Revenue Service (IRS), Treasury.

ACTION: Notice and request for comments.

SUMMARY: The Department of the Treasury, as part of its continuing effort to reduce paperwork and respondent burden, invites the general public and other Federal agencies to take this opportunity to comment on proposed and/or continuing information collections, as required by the Paperwork Reduction Act of 1995, Public Law 104–13 (44 U.S.C. 3506(c)(2)(A)). Currently, the IRS is soliciting comments concerning Form 8801, Credit For Prior Year Minimum Tax—Individuals, Estates and Trusts.

DATES: Written comments should be received on or before June 7, 1999 to be assured of consideration.

ADDRESSES: Direct all written comments to Garrick R. Shear, Internal Revenue Service, room 5571, 1111 Constitution Avenue NW., Washington, DC 20224.

FOR FURTHER INFORMATION CONTACT: Requests for additional information or copies of the form and instructions should be directed to Faye Bruce, (202)

622–6665, Internal Revenue Service, Room 5577, 1111 Constitution Avenue NW., Washington, DC 20224.

SUPPLEMENTARY INFORMATION:

Title: Credit For Prior Year Minimum Tax—Individuals, Estates and Trusts.

OMB Number: 1545–1073.

Form Number: 8801.

Abstract: Form 8801 is used by individuals, estates, and trusts to compute the minimum tax credit, if any, available from a tax year beginning after 1986 to be used in the current year or to be carried forward for use in a future year.

Current Actions: There are no changes being made to Form 8801 at this time.

Type of Review: Extension of a currently approved collection.

Affected Public: Individuals or households.

Estimated Number of Respondents: 38,744.

Estimated Time Per Respondent: 5 hr., 52 min.

Estimated Total Annual Burden Hours: 227,427.

The following paragraph applies to all of the collections of information covered by this notice:

An agency may not conduct or sponsor, and a person is not required to respond to, a collection of information unless the collection of information displays a valid OMB control number. Books or records relating to a collection of information must be retained as long as their contents may become material in the administration of any internal revenue law. Generally, tax returns and tax return information are confidential, as required by 26 U.S.C. 6103.

Request for Comments

Comments submitted in response to this notice will be summarized and/or included in the request for OMB approval. All comments will become a matter of public record. Comments are invited on: (a) Whether the collection of information is necessary for the proper performance of the functions of the agency, including whether the information shall have practical utility; (b) the accuracy of the agency's estimate of the burden of the collection of information; (c) ways to enhance the quality, utility, and clarity of the information to be collected; (d) ways to minimize the burden of the collection of information on respondents, including through the use of automated collection techniques or other forms of information technology; and (e) estimates of capital or start-up costs and costs of operation, maintenance, and purchase of services to provide information.

Approved: March 31, 1999.

Garrick R. Shear,

IRS Reports Clearance Officer.

[FR Doc. 99–8643 Filed 4–6–99; 8:45 am]

BILLING CODE 4830–01–U

UNITED STATES INFORMATION AGENCY

Culturally Significant Objects Imported for Exhibition Determinations: ''Dresden in the Ages of Splendor and Enlightenment: 18th Century Painting from the Old Masters Picture Gallery''

AGENCY: United States Information Agency.

ACTION: Notice.

SUMMARY: Notice is hereby given of the following determinations: Pursuant to the authority vested in me by the Act of October 19, 1965 (79 Stat. 985, 22 U.S.C. 2459), Executive Order 12047 of March 27, 1978 (43 FR 13359, March 29, 1978), and Delegation Order No. 85–5 of June 27, 1985 (50 FR 27393, July 2, 1985). I hereby determine that the objects to be included in the exhibit ''Dresden in the Ages of Splendor and Enlightenment: 18th Century Painting from the Old Masters Picture Gallery,'' imported from abroad for temporary exhibition without profit within the United States, are of cultural significance. These objects are imported pursuant to a loan agreement with the foreign lenders. I also determine that the exhibition or display of the listed exhibit objects at the Columbus Museum of Art, Columbus, OH, from on or about April 23, 1999, to on or about October 24, 1999, is in the national interest. Public Notice of these determinations is ordered to be published in the **Federal Register**.

FOR FURTHER INFORMATION CONTACT: For a copy of the list of exhibit objects or for further information, contact Paul Manning, Assistant General Counsel, Office of the General Counsel, United States Information Agency, at 202/619–5997, or USIA, 301 4th Street, SW, Room 700, Washington, D.C. 20547–0001.

Dated: April 2, 1999.

Les Jin,

General Counsel.

[FR Doc. 99–8608 Filed 4–6–99; 8:45 am]

BILLING CODE 8230–01–M

federal register

Wednesday
April 7, 1999

Part II

Department of Transportation

Federal Transit Administration

49 CFR Part 611

Major Capital Investment Projects; Proposed Rule

DEPARTMENT OF TRANSPORTATION

Federal Transit Administration

49 CFR Part 611

[Docket No. FTA–99–5474]

RIN 2132–AA63

Major Capital Investment Projects

AGENCY: Federal Transit Administration (FTA), DOT.

ACTION: Notice of proposed rulemaking.

SUMMARY: The Transportation Equity Act for the 21st Century (TEA–21) requires the Federal Transit Administration (FTA) to issue regulations on the manner in which candidate projects for capital investment grants and loans for new fixed guideway systems and extensions to existing systems (''new starts'') will be evaluated and rated. This Notice of Proposed Rulemaking (NPRM) describes the procedures that FTA proposes to use in the project evaluation and rating process. When finalized, this rule will enable FTA and Congress to identify those new starts projects that should be funded, in part, by the Federal government.

DATES: Comments on this proposed rule must be submitted by July 6, 1999. Late-filed comments will be considered to the extent practicable.

ADDRESSES: Written comments must refer to the docket number appearing above and must be submitted to the United States Department of Transportation, Central Dockets Office, PL–401, 400 Seventh Street SW, Washington, DC 20590. All comments received will be available for inspection at the above address from 10:00 a.m. to 5:00 p.m., Monday through Friday, except Federal holidays. Those desiring the agency to acknowledge receipt of their comments should include a stamped, self-addressed postcard with their comments.

FOR FURTHER INFORMATION CONTACT: For program issues, John Day, Office of Policy Development, FTA, (202) 366–4060. For legal issues, Scott A. Biehl, Assistant Chief Counsel, FTA, (202) 366–4063.

SUPPLEMENTARY INFORMATION:

Electronic Access

Electronic access to this and other documents is available through FTA's home page on the World Wide Web, at http://www.fta.dot.gov.

Internet users can access all comments received by the U.S. DOT Dockets, Room PL–401, via the Docket Management System (DMS) on the DOT home page, at http://dms.dot.gov. The DMS is available 24 hours each day, 365 days each year. Please follow the instructions online for more information and help.

An electronic copy of this document may be downloaded using a modem and suitable communications software from the Government Printing Office's (GPO) Electronic Bulletin Board Service at (202) 512–1661. Internet users may reach the Federal Register's home page, at *http://www.nara.gov/fedreg*, and the GPO database, at http://www.access.gpo.gov/nara.

Table of Contents

I. Background
II. History
A. The First Policy Statement (1976)
B. Policy on Rail Transit (1978)
C. Statement of Policy on Major Urban Mass Transportation Capital Investments (1984)
D. Surface Transportation and Uniform Relocation Assistance Act of 1987 (STURAA)
E. Intermodal Surface Transportation Efficiency Act of 1991 (ISTEA)
F. Executive Order 12893 (1994)
G. Policy Discussion Paper (1994)
H. The 1996 Statement of Policy
III. Transportation Equity Act for the 21st Century (TEA–21)
A. Significant Changes
B. Other Changes
IV. Government Performance and Results Act of 1993
V. Outreach
VI. Today's Proposed Rule
VII. Section-By-Section Analysis
VIII. Request for Comments on Particular Issues
IX. Regulatory Evaluation
X. Regulatory Process Matters

I. Background

The Federal Transit Administration (FTA) is issuing this NPRM to carry out the requirements of Section 3009(e)(5) of TEA–21. The proposed regulation defines the process FTA will use to evaluate candidate new starts under 49 USC 5309.

These procedures will replace those in force since the December 19, 1996 **Federal Register** Notice [61 FR 67093–106], and the November 12, 1997 amendments to this Notice [62 FR 60756–58], which described the measures then used by FTA to evaluate candidate projects for discretionary new starts funding under the statutory criteria at that time.

This rule, together with the FTA/Federal Highway Administration (FHWA) planning and environmental regulations at 23 CFR Parts 450 and 771, will flesh out the requirements of 49 U.S.C. 5309(e). The statute now requires candidate projects to be ''(A) based on the results of an alternatives analysis and preliminary engineering, (B) justified based on a comprehensive review of its mobility improvements, environmental benefits, cost effectiveness, and operating efficiencies, and (C) supported by an acceptable degree of local financial commitment, including evidence of stable and dependable financing sources to construct, maintain, and operate the system or extension.'' This rule sets forth the approach FTA proposes to use to evaluate candidate projects in terms of their justification and local financial commitment. Consistent with 49 U.S.C. 5309(e)(6), as amended by Section 3009(e) of TEA–21, these procedures will be used to approve candidate projects for entry into preliminary engineering and final design. These procedures will also be used to evaluate projects in order to make recommendations for funding in the annual report to Congress required by 49 U.S.C. 5309(o)(1).

II. History

Since the early 1970's, the Federal government has provided a large share of the Nation's capital investment in urban mass transportation, particularly for ''new starts'' (major new fixed guideway transit systems or extensions to existing fixed guideway systems). By the mid-1970's, because of the magnitude of the New Start commitments being proposed, the Department found it useful to publish a statement of Federal policy to ensure that the available resources would be used in the most prudent and effective manner.

A. The First Policy Statement (1976)

The first policy statement was issued in 1976 [41 FR 41512–14 (9/22/76)]. It introduced a process-oriented approach with the requirement that New Start projects be subjected to an analysis of alternatives, including a Transportation System Management (TSM) alternative that used no-capital and low-capital measures to make the best use of the existing transportation system. The Statement also required projects to be ''cost-effective.''

B. Policy on Rail Transit (1978)

The original policy was supplemented in 1978 by a ''Policy on Rail Transit'' [43 FR 9428–30 (3/7/78)]. This Statement reiterated the requirement for Alternatives Analysis, established requirements for local financial commitments to the project, established the concept of a contract providing for a multi-year commitment of Federal funds, with a maximum limit of Federal participation (the Full Funding Grant

Agreement—FFGA), and required that local governments undertake supporting local land use actions. This was supplemented by a 1980 policy statement that linked the Alternatives Analysis requirement to the Environmental Impact Statement development process [45 FR 71986–87 (10/30/80)].

C. Statement of Policy on Major Urban Mass Transportation Capital Investments (1984)

These principles were reiterated and refined in a May 18, 1984, Statement of Policy on Major Urban Mass Transportation Capital Investments [49 FR 21284–91]. The major feature of this Policy Statement was the introduction of an approach for making comparisons between competing projects. To do so, a rating system was established under which projects were evaluated in terms of a cost effectiveness index of forecast incremental cost per incremental rider for the build alternative, compared with the TSM alternative as the base. Further, index threshold values were established which projects had to pass in order to be considered for funding. In addition, the criteria to be used to judge local financial commitment were spelled out.

D. Surface Transportation and Uniform Relocation Assistance Act of 1987 (STURAA)

The principles of the 1984 policy statement were later incorporated into law with enactment by Congress of the Surface Transportation and Uniform Relocation Assistance Act of 1987 (STURAA) (Pub. L. 100–17). This act established in law a set of criteria which new starts projects had to meet in order to be eligible for Federal discretionary grants. Specifically, projects had to be ''cost-effective'' and ''supported by an adequate degree of local financial commitment.'' STURAA also added a requirement for an annual report to Congress laying out the Department's recommendations for discretionary funding for new starts for the subsequent fiscal year.

To effectuate the requirements set forth in STURAA, on April 25, 1989 FTA (then the Urban Mass Transportation Administration) issued a Notice of Proposed Rulemaking [54 FR 17878–92]. This Proposed Rule would have codified the requirements of the 1984 Policy Statement and made the ''Cost Per New Rider'' Index and threshold values regulatory. However, in the FY 1990 and FY 1991 Appropriations Acts, Congress directed that this rulemaking not be advanced [See the Department of Transportation and Related Agencies Appropriations Act, 1990 (Pub. L. 101–164) and Department of Transportation and Related Agencies Appropriations Act, 1991 (Pub. L. 101–516)]. Thus, on February 3, 1993, this rulemaking was withdrawn [58 FR 6948].

E. Intermodal Surface Transportation Efficiency Act of 1991 (ISTEA)

The Intermodal Surface Transportation Efficiency Act of 1991 (ISTEA) made substantial changes to the legislative basis for the criteria used to evaluate candidate projects. Specifically, the original requirement that a project be ''cost-effective'' was expanded; the new requirement specified that projects be ''justified, based on a comprehensive review of its mobility improvements, environmental benefits, cost-effectiveness, and operating efficiencies.'' In addition, certain ''considerations'' and ''guidelines'' were established that were to be taken into account in determining how well the project meets the criteria.

F. Executive Order 12893 (1994)

On January 26, 1994, the President issued Executive Order 12893 [59 FR 4233–5], describing the principles which Federal agencies are to apply in determining how to invest in all forms of infrastructure, including transportation. The Order requires a systematic analysis of the costs and benefits of proposed investments, and sets out the parameters for such analysis. It calls for efficient management of infrastructure, including a focus on the operation and maintenance of facilities, as well as the use of pricing to manage demand, and calls for comparison of a comprehensive set of options and consideration of quantifiable and qualitative measures of benefits for all programs.

G. Policy Discussion Paper (1994)

Thereafter, in September 1994, FTA circulated a ''policy discussion paper'' to the transit industry and other stakeholders for comment. This paper detailed various approaches for evaluating proposed projects under the ISTEA criteria, and requested comment on nine specific issues. Interest was extensive, and a period of public comment, further analysis, additional industry input, and additional analysis ensued.

H. The 1996 Statement of Policy

On December 19, 1996, FTA issued a Notice in the **Federal Register** that formally adopted the ISTEA project justification criteria [61 FR 67093–106]. This Notice defined the criteria, established the process, and described the measures that would be used to evaluate candidate projects for discretionary new starts funding. This Notice also established a multiple-measure method of project evaluation, in a manner consistent with Executive Order 12893.

This Statement of Policy was amended on November 12, 1997, to incorporate Departmental guidance establishing a Department-wide standard for valuing travel time, and make other technical corrections [62 FR 60756–58].

III. Transportation Equity Act for the 21st Century (TEA–21)

On June 9, 1998, the Transportation Equity Act for the 21st Century (TEA–21) (Pub. L. 105–178) was enacted. TEA–21 leaves much of past law and policy regarding new starts intact, including the basic project justification criteria and the multiple-measure method of project evaluation. However, a number of significant changes were introduced.

A. Significant Changes

- Integration of the Major Investment Study (MIS) requirement into the FTA/FHWA planning and environmental regulations (23 CFR Part 450 and 23 CFR Part 771), elimination of the MIS as a separate requirement (see Section 1308 of TEA–21), and required streamlining of the environmental process (see Section 1309 of TEA–21);
- The requirement for FTA to establish overall project ratings of ''highly recommended,'' ''recommended,'' or ''not recommended;''
- The requirement for FTA approval for a project to advance to the final design stage of the project development process; and
- The requirement that FTA publish regulations on the manner in which proposed projects will be evaluated and rated (the purpose of this rule).

B. Other Changes

- Several additional statutory ''considerations'' have been added to the project evaluation process, including the cost of sprawl, infrastructure cost savings due to compact land use, population density and current transit ridership in a corridor, and the technical capacity of the grantee to undertake the project.
- TEA–21 expressly prohibits FTA from considering the dollar value of mobility improvements (see Section 3010).
- The ISTEA exemptions from the FTA statutory project evaluation process, for proposed projects that

require less than one-third of the project funding from 49 U.S.C. 5309 or are part of a State Improvement Plan for air quality, were eliminated. The exemption remains for projects requiring less than $25 million in 49 U.S.C. 5309 funding.

- For evaluating local financial commitment, the consideration for local funding beyond the required non-Federal share has been incorporated into statute.
- A second annual report to Congress, in addition to the existing *Report on Funding Levels and Allocations of Funds,* is now required. This new ''Supplemental New Starts Report,'' due each August, will include updated ratings for projects that have completed the alternatives analysis and preliminary engineering stages of development since the date of the last *Report on Funding Levels and Allocations of Funds.*

IV. Government Performance and Results Act of 1993

The Government Performance and Results Act (GPRA) was enacted in 1993 to provide for the establishment of strategic planning and performance measurement in the Federal Government. It is primarily intended to improve Federal program effectiveness and public accountability by promoting a new focus on results, service quality, and customer satisfaction.

In recognition of the GPRA's results-oriented focus, FTA intends to develop performance measures to evaluate our administration of the new starts program, and to measure the performance of Federal new starts investments. Both of these measures would be incorporated into FTA's management of new starts projects.

To evaluate FTA's own performance in the administration of the new starts program, we plan to develop indicators to measure the progress and cost of projects at the time they open for revenue service against the schedule and cost estimated in the FFGA (accounting for the fact that the actual project funding stream is dependent on Congressional appropriations). FTA invites comment on what indicators may be appropriate for this evaluation.

FTA is also interested in measuring the actual benefits of new starts once they have opened for revenue service. Toward that end, we plan to incorporate a ''follow-up'' mechanism into the new starts project development process to monitor the actual performance of a new starts project after it opens for revenue service. Measures should address the full range of benefits of new starts investments, such as those embodied in the statutory project justification criteria, while not imposing a large reporting burden on project sponsors. FTA invites comment on appropriate measures and timeframes for evaluation.

V. Outreach

The development of this proposed rule began with a series of outreach sessions conducted during the months of September and October 1998. Three workshops were held around the country: one in Portland, Oregon, in conjunction with the RailVolution Conference on September 14; one in Washington, DC on September 25; and one in New York City, in conjunction with the Annual Meeting of the American Public Transit Association (APTA) on October 8.

The purpose of these outreach sessions was to describe the changes made by TEA–21 to the new starts program, discuss how we plan to implement them, and solicit general comment on FTA's policies and procedures in managing the new starts program.

The comments received during this outreach process were generally supportive of our proposed approach to this rule, including the retention of the basic principles of the 1996 Statement of Policy.

VI. Today's Proposed Rule

This rule defines the process FTA proposes to use to make the statutory evaluation of project justification under 49 U.S.C. 5309(e) (1)-(4), and to approve entry into the preliminary engineering and final design stages of project development as required by 49 U.S.C. 5309(e)(6), for new starts projects proposed for funding under 49 U.S.C. 5309.

To a large degree, this proposed rule builds upon the December 19, 1996 Notice (as amended). The project justification criteria and the evaluation measures are largely unchanged by TEA–21. However, there are a number of important changes to the new starts program that are reflected in this rule. Major elements of the proposed rule are discussed below.

Major Elements of This Proposed Rule

- Establishment of overall project ratings of ''highly recommended,'' ''recommended,'' or ''not recommended'' to determine the eligibility of proposed projects for funding.
- Requirement for FTA approval before a proposed project can advance into preliminary engineering or final design, based on the evaluation and rating of the project.
- Incorporation of additional factors for consideration in FTA project evaluations, including reductions in infrastructure cost achieved through compact land use development, the cost of urban sprawl, population density, current transit ridership in the corridor, and the technical capacity of the grant recipient to construct the proposed project.
- Elimination of the exemption from the 49 U.S.C. 5309(e) project evaluation process for proposed projects with a Federal share of less than one-third, or that are part of State Implementation Plans for air quality.

VII. Section-by-Section Analysis

A. Section 611.1: Purpose and Contents

This section states that this rule is issued to meet the statutory requirement of Title 49, United States Code, Section 5309(e)(5).

This rule establishes the methodology by which FTA will evaluate proposed new starts projects as required by 49 U.S.C. 5309(e). The data collected as part of the planning and project development processes and related regulations, conducted under 23 CFR 450 and 23 CFR 771, will provide the basis for this evaluation. Applicants must follow these rules to be considered eligible for capital investment grants and loans for new fixed guideway systems or extensions (''new starts'').

The results of this evaluation will be used by FTA to make the findings required by statute for proposed projects to advance into the preliminary engineering and final design stages of project development, and to develop funding recommendations for the President's annual budget request. They will also be used to determine which projects are eligible for funding commitments under Full Funding Grant Agreements.

The information collected and ratings developed under this rule will form the basis for the annual Report on Funding Levels and Allocations of Funds, as required under 49 U.S.C. 5309(o)(1), and the ''Supplemental New Starts Report,'' as required by 49 U.S.C. 5309(o)(2). To ensure timely publication of these reports, this rule establishes cutoff dates for submission of project-specific information to be included in these reports.

B. Section 611.3: Applicability

This section states that this rule applies only to the evaluation of projects seeking Federal capital investment funds for new transit fixed guideway and extension projects (''new starts'') under 49 U.S.C. 5309.

It also states that proposed projects are exempt from evaluation under this rule if the total amount of funding under 49 U.S.C. 5309 is less than $25,000,000, or if they are specifically exempt by statute. Such projects must still meet the requirements under 23 CFR 450 and 23 CFR 771, and the project development process described in this rule. Further, FTA must still have a basis to approve entry into preliminary engineering and final design, and make decisions regarding funding commitments—even for exempt projects. Sponsors of proposed projects that they believe to be exempt are therefore strongly urged to submit project evaluation information to FTA.

Finally, this section notes that projects for which a Federal funding commitment (FFGA) has been issued are not subject to reevaluation under this rule.

C. Section 611.5: Definitions

This section defines key terms used in this Part.

D. Section 611.7: Relation to Planning and Project Development Processes

New start projects, like all transportation investments in metropolitan areas, must emerge from a regional multimodal transportation planning process in order to be eligible for Federal funding. In addition, 49 U.S.C. 5309(e)(1) specifies that discretionary grants or loans for new starts may only be approved if a proposed project is based on the results of alternatives analysis and preliminary engineering, and that certain project justification and financial criteria have been met. To be eligible for FTA capital investment funds for a new start project, the proposed project must emerge from the metropolitan and/or Statewide planning process. Local officials must perform a corridor-level analysis of mode and alignment alternatives. This *alternatives analysis* will provide information on the benefits, costs, and impacts of alternative strategies, leading to the selection of a locally-preferred solution to the community's mobility needs. The FTA/FHWA planning and environmental regulations (23 CFR Parts 450 and 771), which required a Major Investment Study (MIS) that fulfilled the requirement for alternatives analysis, are being revised in accordance with TEA–21.

The approach taken in this regulation envisions alternatives analysis as a key planning tool, supplemented by subsequent project development analyses, for determining appropriate solutions to transportation issues. As FTA and FHWA approach modification of their joint planning and environmental regulations, this rule may have implications for that effort and vice versa. FTA is particularly interested in comments about the relationship between the alternatives analysis requirement and its relationship to the planning and project development processes. The agency also welcomes comments regarding appropriate strategies for considering management and operation strategies, including the TSM and no build options, in the context of planning and project development.

Federal financial support for the planning process is derived from a number of sources, including the Metropolitan Planning Program under 49 U.S.C. 5303, the State National Planning and Research Program under 49 U.S.C. 5313, and planning programs administered by the Federal Highway Administration. FTA Urbanized Area Formula funds under 49 U.S.C. 5307 and flexible funds under the Surface Transportation Program (STP) and the Congestion Mitigation and Air Quality (CMAQ) Program may also be used to support certain planning activities. Given the significant demands placed on the new start program, FTA does not support the use of 49 U.S.C. 5309 funds for initial planning activities. Moreover, as amended by TEA–21, 49 U.S.C. 5309(m)(2) limits the amount of new starts funding that can be used for purposes other than final design and construction to not more than 8 percent of funds appropriated. In evaluating the local financial commitment to a proposed project, FTA will therefore consider the degree to which initial planning activities are conducted without funding from section 5309.

When the sponsoring agency for a new start project desires to initiate the preliminary engineering phase of project development, it must submit a request to the FTA regional office. The request must provide information on the metropolitan and/or Statewide plan that identifies the project, including the adoption of the project into the metropolitan transportation plan and the programming of the preliminary engineering study in the TIP. The request must also address the project justification and local financial commitment criteria outlined below. (This information is normally developed as part of an alternatives analysis.) FTA will then evaluate the proposed project as required by 49 U.S.C. 5309(e)(6) and determine whether or not to advance the project into preliminary engineering. FTA approval to initiate preliminary engineering is not a commitment to fund final design or construction.

Where the sponsoring agency believes that a proposed project is exempt from evaluation under this rule, submission of project justification and financial commitment information to FTA is not required. However, without such information FTA will have no basis for approving an exempt project for entry into preliminary engineering and final design, and will be unable to make decisions on whether to recommend Federal funding commitments. Therefore, sponsors of exempt projects are strongly encouraged to submit information on project justification and financial commitment.

During the preliminary engineering phase, local project sponsors refine the design of the proposal, taking into consideration all reasonable design alternatives. The process results in estimates of project costs, benefits and impacts in which there is a higher degree of confidence. In addition, NEPA requirements are completed (for new starts, this will normally entail the completion of an environmental impact statement), project management concepts are finalized, any required funding sources are put in place, and safety matters are addressed. Information on project justification and the degree of local financial commitment will be continually updated and reported as appropriate. As part of their preliminary engineering activities, localities are encouraged to consider policies and actions designed to enhance the benefits of the project and its financial feasibility.

Project sponsors should ensure that safety considerations are weighed during the preliminary engineering phase. With regard to rail projects that will be subjected to Federal Railroad (FRA) safety jurisdiction, FTA will notify FRA of pending new starts because important decisions impacting rail safety should be made early in the planning and grant development process. FRA will forward any recommendations it has to FTA, which will forward them to the project sponsor.

A comprehensive preliminary engineering effort should address the evaluation criteria described in this rule.

Preliminary engineering is typically financed with 49 U.S.C. 5303 and 5307 funds, local revenues, and flexible funds under the STP and CMAQ programs.

Final Design is the last phase of project development, and includes right-of-way acquisition, utility relocation, and the preparation of final construction plans (including construction management plans), detailed specifications, construction

cost estimates, and bid documents. The final design stage cannot be initiated until environmental requirements have been satisfied, as evidenced by a Record of Decision (ROD) or a Finding of No Significant Impact (FONSI). Consistent with 49 U.S.C. 5309(e)(6), FTA will approve entry into final design based on the results of the project evaluation process. Final design is typically eligible for 49 U.S.C. 5309 new start funds.

E. Section 611.9: Project Justification Criteria

To make the statutory approvals required for a project to enter preliminary engineering and final design; for execution of an FFGA; and annual project funding recommendations, FTA will evaluate information developed through the planning and project development processes. The method used to make these determinations is a multiple measure approach in which the merits of candidate projects will be evaluated against a set of measures. These measures will also be used to determine which projects to recommend for funding in the report required by 49 U.S.C. 5309(o)(1). The ratings for each measure will be updated throughout the preliminary engineering and final design processes, as costs, benefits and impacts are more precisely defined. As a candidate project proceeds through the stages of the project development process, a greater degree of certainty is expected with respect to these measures. Measures have been established for each of the following criteria:

1. Mobility improvements;
2. Environmental benefits;
3. Operating efficiencies;
4. Cost effectiveness;
5. Transit-supportive existing land use policies and future patterns; and
6. Other factors, including:

(a) the degree to which the policies and programs (local transportation planning, programming and parking policies, etc.) are in place as assumed in the forecasts;

(b) project management capability; and

(c) additional factors relevant to local and national priorities and relevant to the success of the project.

In all cases, the proposed new start will be evaluated against both a no-build and TSM alternative. For each proposed project, FTA will assign one of five descriptive ratings (''high,'' ''medium-high,'' ''medium,'' ''low-medium,'' or ''low'') for each of these six criteria.

The measures for these criteria are described in Appendix A to this proposed rule. FTA may amend or modify these measures in response to the results of ongoing research into methods for evaluating the benefits of transit investments.

''Transit-supportive land use policies and future patterns'' is not listed among the project justification criteria contained in 49 U.S.C. 5309(e)(1)(B), but is listed as one of the ''considerations'' under 49 U.S.C. 5309(e)(3) that FTA must take into account when determining a proposed project's ''justification.'' Consistent with past practice, we have included land use among the project justification criteria for a number of reasons. Transit-supportive local land use policies, which target development around the Federally-assisted project, have been an important indicator of future project success. Additionally, TEA–21 added two new land-use-related considerations to the project evaluation process: the reduction in local infrastructure costs achieved through compact land use development (49 U.S.C. 5309(e)(3)(B)), and the cost of suburban sprawl (49 U.S.C. 5309(e)(3)(C)). This appears to be a clear intent by Congress to give additional attention to this issue. In making the determination of project justification, 49 U.S.C. 5309(e)(3) requires the FTA to consider a variety of factors, as follows:

1. The direct and indirect costs of relevant alternatives;
2. Factors such as congestion relief, improved mobility, air pollution, noise pollution, energy consumption, and all associated ancillary and mitigation costs necessary to carry out each alternative analyzed and to recognize reductions in local infrastructure costs achieved through compact land use development;
3. Mass transportation-supportive existing land use policies and future patterns, and the cost of suburban sprawl;
4. The degree to which the project increases the mobility of the mass transportation dependent population or promotes economic development;
5. Population density and current transit ridership in the corridor;
6. The technical capability of the grant recipient to construct the project;
7. Differences in local land, construction, and operating costs; and
8. Other factors that the Secretary determines appropriate.

This represents a modest expansion of the ''considerations'' established by ISTEA. Specifically, Section 3009(e) of TEA–21 added the consideration for the cost of suburban sprawl noted in (3) above; for population density and current transit ridership in the corridor in (5) above; and for the technical capacity of the grantee to carry out the proposed project in (6) above. The ''considerations'' serve to illustrate the project justification criteria, providing further detail on specific information that should be collected and how the criteria should be evaluated. Much of the data required to consider these factors is already developed as part of the existing planning and project development processes, however, as required under 23 CFR 450 and 23 CFR 771.

When evaluating proposed new starts projects, FTA will apply these criteria to the project as proposed for Federal funding under 49 U.S.C. 5309. This means that if local project sponsors are seeking new starts funding at this time for a segment of a larger planned transit investment, only that specific segment will be evaluated.

F. Section 611.11: Local Financial Commitment

Section 5309(e)(1)(C) requires that proposed projects also be supported by an acceptable degree of local financial commitment, including evidence of stable and dependable financing sources to construct, maintain and operate the system or extension. This proposed rule retains the following criteria for evaluation of the local financial commitment to a proposed project:

1. The proposed share of total project costs from sources other than Section 5309, including Federal formula and flexible funds, the local match required by Federal law, any additional capital funding (''overmatch''), and the degree to which initial planning activities have been carried out without relying on funds from section 5309.
2. The strength of the proposed capital financing plan (rated ''high,'' ''medium-high,'' ''medium,'' ''low-medium,'' or ''low'').
3. The ability of the sponsoring agency to fund operation and maintenance of the entire system as planned once the guideway project is built. Ratings of ''high,'' ''medium-high,'' ''medium,'' ''low-medium,'' or ''low'' will be used to describe stability and reliability of operating revenue.

The measures for these criteria are carried over intact from those used previously, and are more fully explained in Appendix A. The only change is that ''overmatch'' was added as a statutory consideration by TEA–21.

G. Section 611.13: Overall Project Ratings

Perhaps the most significant change to this process brought by TEA 21 is the

requirement that FTA establish summary recommendations for each project, in addition to the ratings for each of the project justification criteria. Section 5309(e)(6) requires FTA to ''evaluate and rate [each] project as 'highly recommended,' 'recommended,' or 'not recommended,'" based on the results of the project evaluation process. It also requires that ratings be assigned to each of the individual evaluation criteria.

FTA will combine the ratings for each of the financial rating factors and project justification criteria into overall ''finance'' and ''justification'' ratings. These ratings will then be combined into the single, overall project ratings required by TEA–21. For a proposed project to be rated as ''recommended,'' it must be rated at least ''medium'' in terms of both finance and justification. To be ''highly recommended,'' a proposed project must be rated at least ''medium-high'' for both finance and at justification. Proposed projects not rated at least ''medium'' in both finance and justification will be rated as ''not recommended.''

These ratings will be used both to approve entry into preliminary engineering and final design, and to recommend proposed projects for Federal funding commitments. A proposed project must receive a rating of at least ''recommended'' in order to be approved for any of these purposes.

It is important to note that a *rating* of ''recommended'' does not translate directly into a *funding* recommendation in any given fiscal year. Rather, the overall project ratings are intended by this proposed rule to reflect overall project merit. Proposed projects that are rated ''recommended'' or ''highly recommended,'' *and* have been sufficiently developed for consideration of a Federal funding commitment (i.e., FFGA), will be eligible for funding recommendations in the Administration's proposed budget for a given fiscal year.

VIII. Request for Comments on Particular Issues

FTA seeks comment on the following issues, in particular:

1. Consistent with FTA's 1996 Statement of Policy and prior practice, this proposed rule does not establish ''threshold'' values for the statutory project justification criteria. Instead, we rate each project as ''high,'' ''medium-high,'' ''medium,'' ''low-medium,'' or ''low'' according to its individual merits under each of the measures. Should FTA establish ''threshold'' or ''pass/fail'' values for evaluating each of these criteria? If so, what thresholds are appropriate for each criterion?

2. FTA has historically relied on the measure of ''cost per new rider'' (more precisely, incremental cost per incremental rider) to indicate cost effectiveness, an approach retained in this proposed rule. Are there other means for measuring the cost effectiveness of a proposed new starts project?

3. 49 U.S.C. 5309(e)(3) establishes a number of ''factors'' that FTA must consider when evaluating proposed projects under the justification criteria. In particular, 49 U.S.C. 5309(e)(3)(F) directs us to ''consider the technical capability of the grant recipient to construct the project,'' and 49 U.S.C. 5309(e)(3)(H) directs FTA to consider ''other factors'' as ''appropriate.'' How should FTA evaluate the ''technical capability'' of project sponsors? What ''other factors'' might be appropriate?

4. FTA also seeks comment on how much relative attention should be given to each of the project justification criteria (mobility improvements, environmental benefits, operating efficiencies, cost effectiveness, land use and other factors) to establish the overall project ratings.

IX. Regulatory Evaluation

The Federal Transit Administration (FTA) has evaluated the industry-wide costs and benefits of the rule, Major Capital Investment Projects, which is required by section 3009(e) of the TEA–21. This rule will determine the process that FTA will use to evaluate and rate major capital investments under the statutory criteria in 49 U.S.C. 5309(e), which requires FTA to establish overall project ratings of ''highly recommended,'' ''recommended,'' or ''not recommended,'' and to consider new criteria elements. The changes required by TEA–21 to FTA's pre-existing statutory criteria are relatively minor and affect FTA program management operations more than a recipient's operations. The preliminary regulatory evaluation is available for public inspection in the docket established for this rulemaking.

X. Regulatory Process Matters

A. Executive Order 12688

The FTA has evaluated the industry costs and benefits of the major capital investments rule and has determined that it is a significant rule under E.O. 12688 because of the significant policy issues involved in federally funding major capital investments. This rule will not, however, have an impact on the economy of $100 million or more.

B. Departmental Significance

This rule is a ''significant regulation'' as defined by the Department's Regulatory Policies and Procedures, because it involves an important departmental policy and will probably generate a great deal of public interest. The purpose of this rule is to establish how the Secretary will rate various major capital investment projects.

C. Regulatory Flexibility Act

In accordance with the Regulatory Flexibility Act, 5 U.S.C. 601 *et seq.*, the FTA has evaluated the effects of this rule on small entities. Based on this evaluation, the FTA hereby certifies that this action will not have a significant economic impact on a substantial number of small entities because this rule concerns only major capital investments, which are not usually undertaken by small entities.

D. Paperwork Reduction Act

This rule includes information collection requirements subject to the Paperwork Reduction Act; however, due to the fact that TEA–21 eliminated the MIS as a stand-alone requirement, the agency believes that a reduction in the paperwork burden is the likeliest outcome. Because the rule is related to two other proposed rulemakings, Environmental Procedures (currently codified at 49 CFR 622 and 23 CFR 771) and Planning (49 CFR 613 and 23 CFR 450) concerning similar issues, the agency is unable to determine the actual reduction in the paperwork burden. The NPRMs for these rules are expected to be issued later this year. The agency will submit a request for a Paperwork Reduction Act approval with the proposed Environmental and Planning rules. FTA currently collects information under an approved Paperwork Reduction Act request (control #2132–0529).

E. Executive Order 12612

This action has been analyzed in accordance with the principles and criteria contained in Executive Order 12612 and it has been determined that the proposed rule does not have sufficient Federalism implications to warrant the preparation of a Federalism Assessment.

F. National Environmental Policy Act

The agency has determined that this proposed rule, if adopted, will have positive effects on the environment by encouraging the use of mass transit, which may reduce the use of single occupancy vehicles.

G. Energy Act Implications

This regulation should have a positive effect on energy consumption because, through the Federal investment mass transit projects, it would increase the use of mass transit.

H. Effects on the Year 2000 Computer Problem

This rule does not mandate business process changes or require modifications to computer systems that will detract recipients from using resources to address any possible year 2000 computer problems.

I. Unfunded Mandates Reform Act

This rule will not result in the expenditure by State, local, and tribal governments, in the aggregate, of $100,000,000 or more in any one year.

List of Subjects in 49 CFR Part 611

Government Contracts, Grant programs—Transportation, Mass transportation.

Accordingly, for the reasons set out in the preamble, the Federal Transit Administration proposes to add 49 CFR part 611, reading as follows:

PART 611—MAJOR CAPITAL INVESTMENT PROJECTS

Sec.
611.1 Purpose and contents
611.3 Applicability
611.5 Definitions
611.7 Relation to Planning and Project Development Processes
611.9 Project Justification Criteria for Grants and Loans for Fixed Guideway Systems
611.11 Local financial commitment criteria
611.13 Overall Project Ratings

Appendix A to Part 611—Description of Measures Used for Project Evaluation

Authority: 49 U.S.C. 5309; 49 CFR 1.51

§ 611.1 Purpose and contents.

(a) This part prescribes the process that applicants must follow to be considered eligible for capital investment grants and loans for new fixed guideway systems or extensions to existing systems (''new starts''). Also, this part prescribes the procedures used by FTA to evaluate proposed new starts projects as required by 49 U.S.C. 5309(e), and the scheduling of project reviews required by 49 U.S.C. 5328(a).

(b) This part defines how the results of the evaluation described in paragraph (a) of this section will be used to:

(1) Approve entry into preliminary engineering and final design, as required by 49 U.S.C. 5309(e)(6);

(2) Rate projects as ''highly recommended,'' ''recommended,'' or ''not recommended,'' as required by 49 U.S.C. 5309(e)(6);

(3) Assign individual ratings for each of the project justification criteria specified in 49 U.S.C. 5309(e)(1)(B) and (C);

(4) Determine project eligibility for Federal funding commitments, in the form of Full Funding Grant Agreements; and

(5) Determine funding recommendations for this program for the Administration's annual budget request.

(c) The information collected and ratings developed under this part will form the basis for the annual reports to Congress, required by 49 U.S.C. 5309(o)(1) and (2). For purposes of these reports, project information will be considered current as of the following dates:

(1) December 1 of each year, for the annual Report on Funding Levels and Allocations of Funds required by 49 U.S.C. 5309(o)(1) and due not later than the first Monday of each February; and

(2) July 1 of each year, for the annual Supplemental New Starts Report required by 49 U.S.C. 5309(o)(2) and due on the 31st day of August of each year.

§ 611.3 Applicability.

(a) This part applies to all proposals for Federal capital investment funds under 49 U.S.C. 5309 for new transit fixed guideway systems and extensions to existing systems.

(b) Projects described in paragraph (a) of this section are not subject to evaluation under this part if the total amount of funding from 49 U.S.C. 5309 will be less than $25 million, or if such projects are otherwise exempt from evaluation by statute.

(1) Exempt projects must still be rated by FTA for purposes of approving entry into preliminary engineering or final design, as required by 49 U.S.C. 5309(e)(6), or entering into a Federal funding commitment as required by 49 U.S.C. 5309(e)(7). Sponsors who believe their projects to be exempt are strongly encouraged to submit data for project evaluation as described in this part.

(2) Such projects are still subject to the requirements of 23 CFR part 450 and 23 CFR part 771.

(3) This part does not apply to projects for which a Federal funding commitment (FFGA) has already been issued.

(c) Consistent with 49 U.S.C. 5309(e)(8)(B), FTA will make decisions on the justification of proposed projects using expedited procedures as appropriate, for proposed projects that are:

(1) Located in a nonattainment area;

(2) Transportation control measures as defined by the Clean Air Act (42 U.S.C. 7401 *et. seq.*); and

(3) Required to carry out a State Implementation Plan.

(4) For such projects, FTA will complete action on approving entry into preliminary engineering and final design in less than the normal time.

§ 611.5 Definitions.

The definitions established by Titles 12 and 49 of the United States Code, the Council on Environmental Quality's regulation at 40 CFR parts 1500 through 1508, and FHWA–FTA regulations at 23 CFR parts 450 and 771 are applicable. In addition, the following definitions apply:

Alternatives analysis is a corridor level analysis which evaluates all reasonable mode and alignment alternatives for addressing a transportation problem, and results in the adoption of a locally preferred alternative by the appropriate State and local agencies and official boards.

Extension to existing fixed-guideway system means a newly-constructed extension to an existing fixed guideway system.

FFGA means a Full Funding Grant Agreement.

Final design is the final phase of project development, and includes the preparation of final construction plans (including construction management plans), detailed specifications, construction cost estimates, and bid documents.

Fixed guideway system means a mass transportation facility which utilizes and occupies a separate right-of-way, or rail line, for the exclusive use of mass transportation and other high occupancy vehicles, or uses a fixed catenary system and a right of way usable by other forms of transportation. This includes, but is not limited to, rapid rail, light rail, commuter rail, automated guideway transit, people movers, and exclusive facilities for buses and other high occupancy vehicles.

FTA means the Federal Transit Administration.

Full Funding Grant Agreement means an instrument that defines the scope of a project, the Federal financial contribution, and other terms and conditions.

Major transit investment means any project that involves the construction of a new fixed guideway system or extension of an existing fixed guideway system for use by mass transit vehicles.

New fixed guideway system means a newly-constructed fixed guideway system where no such system exists.

New start means a new fixed guideway system, or an extension to an existing fixed guideway system.

NEPA process means those procedures necessary to meet the requirements of the National Environmental Policy Act of 1969, as amended (NEPA), at 23 CFR part 771; the NEPA process is completed when a Record of Decision (ROD) or Findings of No Significant Impact (FONSI) is issued.

No-build alternative means a baseline case consisting of those elements in a region's transportation plan excluding the proposed new start.

Preliminary Engineering is the process by which the design of the proposed project is refined, estimates of project costs, benefits and impacts are developed, NEPA requirements are completed (for new starts, this will normally entail the completion of an environmental impact statement), project management concepts are finalized, and required funding sources are put in place.

Secretary means the Secretary of Transportation.

TEA–21 means the Transportation Equity Act for the 21st Century.

Transportation system management (TSM) alternative means a package of low to moderate cost improvements designed to make more efficient use of an existing transportation system. TSM alternatives typically include elements such as traffic engineering and signalization, transit operational changes, and modest capital.

§ 611.7 Relation to planning and project development processes.

To be eligible for FTA capital investment funding, a proposed project must be based on the results of alternatives analysis and preliminary engineering. The selected strategy must be included in the metropolitan transportation plan.

(a) *Planning considerations.* All new start projects proposed for funding assistance under 49 U.S.C. 5309 must emerge from the metropolitan and Statewide planning process, consistent with 23 CFR part 450.

(b) *Alternatives analysis. (1) To be eligible for FTA capital investment funding for a major fixed guideway transit project, local project sponsors must perform an alternatives analysis.*

(2) The alternatives analysis develops information on the benefits, costs, and impacts of alternative strategies, leading to the adoption of a locally preferred alternative.

(3) The alternative strategies evaluated in an alternatives analysis must include a TSM and no-build alternative, as well as the proposed new start.

(4) Exceptions:

(i) The requirement for an alternatives analysis shall not apply to certain new start projects that, by statute, are exempt from evaluation under this part.

(ii) Consistent with 49 U.S.C. 5309(e)(8), proposed projects are exempt from the project rating process if the amount of Section 5309 assistance being sought for the project is less than $25 million.

(iii) Projects for which FFGAs have been issued prior to [the effective date of the final rule] shall not be re-evaluated under this part.

(c) *Preliminary engineering.* Consistent with 49 U.S.C. 5309(e)(6) and 5328(a)(2), FTA will approve entry of a proposed project into preliminary engineering within 30 days of receipt of a formal request from the project sponsor(s).

(1) FTA's approval will be based on the results of its evaluation as described in this part.

(2) At a minimum, a proposed project must receive an overall rating of ''recommended'' to be approved for entry into preliminary engineering.

(d) *Final design.* (1) The final design stage cannot be initiated until environmental requirements have been satisfied, as evidenced by completion of the NEPA process.

(2) Consistent with 49 U.S.C. 5309(e)(6) and 5328(a)(3), FTA will approve entry of a proposed project into final design within 120 days of receipt of a formal request from the project sponsor(s).

(i) FTA's approval will be based on the results of the project evaluation described in this part.

(ii) At a minimum, a proposed project must receive an overall rating of ''recommended'' to be approved for entry into final design.

(e) *Full Funding Grant Agreements.* (1) FTA will determine whether to execute an FFGA based on the evaluations and ratings established by this part.

(2) An FFGA shall not be executed for a project that is not authorized for final design and construction by Federal law.

(3) FFGAs will be executed only for those projects which are rated as ''recommended'' or ''highly recommended'' and which are ready to utilize Federal new starts funds, consistent with available program authorization.

(4) In any instance in which FTA decides to provide financial assistance for construction of a new start project, FTA will negotiate an FFGA with the grantee during final design of that project. Pursuant to the terms and conditions of the FFGA:

(i) A maximum level of Federal financial contribution will be fixed;

(ii) The grantee will be required to complete construction of the project, as defined, to the point of initiation of revenue operations, and to absorb any additional costs incurred or necessitated;

(iii) FTA and the grantee will set a mutually agreeable schedule for anticipating Federal contributions during the final design and construction period; and

(iv) Specific annual contributions under the FFGA will be subject to the availability of budget authority and the ability of the grantee to use the funds effectively.

(5) The total amount of Federal obligations under Full Funding Grant Agreements and potential obligations under Letters of Intent will not exceed the amount authorized for new starts under 49 U.S.C. 5309.

(6) FTA may also make a ''contingent commitment,'' which is subject to future congressional authorizations and appropriations, pursuant to 49 U.S.C. 5309(g), 5338(b), and 5338(h).

§ 611.9 Project justification criteria for grants and loans for fixed guideway systems.

In order to approve a grant or loan under 49 U.S.C. 5309, FTA must find that the proposed project is justified as described in section 5309(e)(1)(B).

(a) To make the statutory evaluations and assign ratings for proposed projects, as required by section 5309(e)(6), FTA will evaluate information developed locally through alternatives analyses and refined through preliminary engineering and final design.

(1) The method used to make this determination will be a Multiple Measure approach in which the merits of candidate projects will be evaluated against each of the criteria specified by section 5309(e)(1)(B).

(2) The measures for these criteria are specified in Appendix A to this part.

(3) The measures for these criteria will also be used to determine which projects to recommend for funding in the report required by section 5309(o)(1).

(4) The measures will be applied to the project as it has been proposed to FTA for funding under 49 U.S.C. 5309.

(5) The ratings for each of the criteria will be expressed in terms of descriptive indicators, as follows: ''high,'' ''medium-high,'' ''medium,'' ''low-medium,'' or ''low.''

(6) The ratings for each criterion will be updated throughout the preliminary

engineering and final design stages of project development, as costs, benefits and impacts are more precisely defined.

(7) As a candidate project proceeds through preliminary engineering and final design, a greater degree of certainty is expected with respect to these criteria.

(8) The proposed new start will be compared to both the TSM and no-build alternatives.

(b) The criteria are as follows:

(1) *Mobility improvements.*

(2) *Environmental benefits.*

(3) *Operating efficiencies.*

(4) *Cost-effectiveness.*

(5) *Transit supportive existing land use policies and future patterns.*

(6) *Other factors.* Additional factors, including but not limited to:

(i) The degree to which the programs and policies (local transportation planning, programming and parking policies, etc.) are in place as assumed in the forecasts,

(ii) Project management capability, including the technical capability of the grant recipient to construct the project, and

(iii) Additional factors relevant to local and national priorities and relevant to the success of the project.

(c) In evaluating proposed new starts projects under these criteria in paragraph (b) of the section, the following factors shall be considered:

(1) The direct and indirect costs of relevant alternatives;

(2) Factors such as congestion relief, improved mobility, air pollution, noise pollution, energy consumption, and all associated ancillary and mitigation costs necessary to carry out each alternative analyzed, and recognize reductions in local infrastructure costs achieved through compact land use development;

(3) Mass transportation-supportive existing land use policies and future patterns, and the cost of urban sprawl;

(4) The degree to which the project increases the mobility of the mass transportation dependent population or promotes economic development;

(5) Population density and current transit ridership in the corridor;

(6) The technical capability of the grant recipient to construct the project;

(7) Differences in local land, construction, and operating costs; and

(8) Other factors as appropriate.

(d) FTA may amend the measures for the criteria in paragraph (b) of this section, pending the results of ongoing studies regarding transit benefit evaluation methods.

(e) The individual ratings for each of the criteria in paragraph (b) of this section will be combined into a summary rating for project justification. ''Other factors'' will be considered as appropriate.

§ 611.11 Local financial commitment criteria.

In order to approve a grant or loan under 49 U.S.C. 5309, FTA must find that the proposed project is supported by an acceptable degree of local financial commitment, as required by section 5309(e)(1)(C). The local financial commitment to a proposed project will be evaluated according to the following measures:

(a) The proposed local share of project costs, defined as the percentage of capital costs to be met using funds from sources other than 49 U.S.C. 5309, including both the local match required by Federal law and any additional capital funding (''overmatch''), and the degree to which initial planning activities have been carried out without funding from section 5309;

(b) The strength of the proposed capital financing plan; and

(c) The ability of the local transit agency to fund operation of the system as planned once the guideway project is built.

(d) For each proposed project, ratings for paragraphs (b) and (c) of this section will be reported in terms of descriptive indicators, as follows: ''high,'' ''medium-high,'' ''medium,'' ''low-medium,'' or ''low.'' For paragraph (a), of this section the percentage of Federal funding sought from 49 U.S.C. 5309 will be reported.

(e) The individual ratings for each measure described in this section will be combined into a summary rating for local financial commitment.

§ 611.13 Overall project ratings.

(a) The ratings developed for each of the project justification criteria and for local financial commitment (§§ 611.9 and 611.11) will form the basis for the overall rating for each project.

(b) Overall ratings of ''highly recommended,'' ''recommended,'' and ''not recommended,'' as required by 49 U.S.C. 5309(e)(6), will be assigned to each proposed project.

(c) These ratings will be used to:

(1) Approve advancement of a proposed project into preliminary engineering and final design;

(2) Approve projects for FFGAs; and

(3) Make annual funding recommendations to Congress in the annual report on funding levels and allocations of funds required by 49 U.S.C. 5309(o)(1).

(d) Projects will receive overall ratings based on the following conditions:

(1) Projects will be rated as ''recommended'' if they receive a rating of ''medium'' or higher for both project justification (§ 611.9) and local financial commitment (§ 611.11)

(2) Projects will be rated as ''highly recommended'' if they receive a rating higher than ''medium'' for both local financial commitment and project justification.

(3) Projects will be rated as ''not recommended'' if they do not receive a rating of at least ''medium'' for both project justification and local financial commitment.

Appendix A to Part 611—Description of Measures Used for Project Evaluation

Project Justification

1. FTA will use several measures to evaluate candidate new starts projects according to the criteria established by 49 U.S.C. 5309(e)(1)(B). These measures have been developed according to the considerations identified at 49 U.S.C. 5309(e)(3) (''Project Justification''), consistent with Executive Order 12893. From time to time, FTA has published technical guidance on the application of these measures, and the agency expects it will continue to do so. Moreover, FTA may well choose to amend these measures, pending the results of ongoing studies regarding transit benefit evaluation methods.

2. The first four criteria listed in paragraphs (a) through (d) represent the benefits of proposed new start projects by comparing the new start project to either the TSM or no-build alternative. In order for this comparison to fairly reflect the benefit of the new start project, it is mandatory that planning factors external to the new start project and its supporting corridor bus service be the same among the TSM, no-build and new start project alternatives. For these alternatives, this means that highway and transit networks should be the same outside the corridor of the new start project, and the policies affecting travel demand and cost such as parking costs and land use, should also be the same.

3. The fifth criterion, ''transit supportive existing land use policies and future patterns,'' reflects the importance of transit-supportive local land use policies as an indicator of ultimate project success.

(a) *Mobility Improvements.*

(1) The aggregate travel time savings per year (forecast year) anticipated from the new investment, compared to both the no-build and TSM alternatives. This aggregate includes the travel time savings of people using competitive modes, along with those on the trips made by transit. Travel time savings for those switching from highways to transit will be calculated using a consumer surplus approach, taking one-half of the total travel time savings for those riders assumed in the no-build or TSM alternatives. The net figure will be expressed in terms of the total projected travel time savings for the region.

(2) The net figure of travel time savings for low income households affected by the new start alternative, in comparison with the no-build and TSM alternatives.

(3) The absolute number of low income households located within ½ mile of

boarding points associated with the proposed system increment.

(b) *Environmental Benefits.*

(1) The annual forecast change in criteria pollutant emissions and in greenhouse gas emissions, ascribable to the proposed new investment, calculated in terms of tons for each criteria pollutant or gas;

(2) The forecast net change per year (forecast year) in the regional consumption of energy, ascribable to the proposed new investment, expressed in British Thermal Units (BTU);

(3) Current Environmental Protection Agency designations for the region's compliance with National Ambient Air Quality Standards.

(4) The new start alternative will be compared to both the no-build and TSM alternatives.

(c) *Operating Efficiencies.* The forecast change in operating cost per passenger-mile (forecast year), for the entire transit system. The new start will be compared to both the TSM and no-build alternatives.

(d) *Cost-Effectiveness.* The cost effectiveness of a proposed project shall be evaluated according to the incremental change in total capital and operating cost per incremental passenger, based on the forecast change in annual transit ridership (forecast year) and the annualized total (Federal and local) capital investment and operating cost. The new start will be compared to the no-build and TSM alternatives.

(e) *Transit supportive existing land use policies and future patterns.* Transit-supportive land use policies and patterns shall be evaluated according to the degree to which local land use policies are likely to foster transit supportive land use, measured in terms of the kinds of policies in place, and the commitment to these policies. The following seven factors will form the basis for this evaluation:

(1) Existing land use;

(2) Containment of sprawl;

(3) Transit-supportive corridor policies;

(4) Supportive zoning regulations near transit stations;

(5) Tools to implement land use policies;

(6) The performance of land use policies; and

(7) The value of any reductions in local infrastructure costs achieved through compact land use development.

(f) *Other factors.* Other factors that will be considered when evaluating projects for funding commitments include:

(1) The degree to which the policies and programs (local transportation planning, programming and parking policies, etc.) are in place as assumed in the forecasts;

(2) Project management capability, including the technical capability of the grant recipient to construct the project;

(3) Population and employment density in the corridor within ½ mile of the transit stops of the new start project, for current and forecast years;

(4) Current ridership potential for the new start project, determined by forecasting ridership for the new start project using today's land use and modifying the current transit network by inserting the new start project and necessary feeder bus service; and

(5) Additional factors relevant to local and national priorities and to the success of the project.

Local Financial Commitment

FTA will use the following measures to evaluate the local financial commitment to a proposed project:

(a) The proposed local share of project costs, defined as the percentage of capital costs to be met using funds from sources other than 49 U.S.C. 5309, including both the local match required by Federal law and any additional capital funding (''overmatch''). Consideration will be given to:

(1) The use of innovative financing techniques, as described in the May 9, 1995, **Federal Register** notice on *FTA's Innovative Financing Initiative* (60 FR 24682);

(2) The use of ''flexible funds'' as provided under the CMAQ and STP programs;

(3) The degree to which alternatives analysis and preliminary engineering activities were carried out without funding from section 5309; and

(4) The actual local share of the cost of recently-completed or simultaneously undertaken fixed guideway systems and extensions that are related to the proposed project under review (FTA's intent is to recognize that a region's local financial commitment to fixed guideway systems and extensions may not be limited to a single project).

(b) The strength of the proposed capital financing plan, according to:

(1) The stability and reliability of each proposed source of local match, including inter-governmental grants, tax sources, and debt obligations, with an emphasis on availability within the project development timetable;

(2) Whether adequate provisions have been made to cover unanticipated cost overruns; and

(c) The ability of the local transit agency to fund operation of the system as planned once the guideway project is built, according to:

(1) An evaluation of the operating revenue base; and

(2) Its ability to expand to meet the incremental operating costs associated with a new fixed guideway investment and any other new services and facilities.

Issued: April 1, 1999.

Gordon J. Linton,

Administrator.

[FR Doc. 99–8477 Filed 4–6–99; 8:45 am]

BILLING CODE 4910–57–P

federal register

Wednesday
April 7, 1999

Part III

The President

Proclamation 7177—Cancer Control Month, 1999

Proclamation 7178—National Child Abuse Prevention Month, 1999

Federal Register
Vol. 64, No. 66
Wednesday, April 7, 1999

Presidential Documents

Title 3—

The President

Proclamation 7177 of April 1, 1999

Cancer Control Month, 1999

By the President of the United States of America

A Proclamation

Each year for more than half a century, our Nation has dedicated the month of April to reaffirming our commitment to developing more effective prevention, detection, and treatment of cancer and to recognizing the progress that we have made in fighting this devastating disease.

Today we are reaping the rewards of our long-standing efforts to combat cancer as researchers make remarkable progress virtually every day. Over the past several years, for example, scientists have identified genes involved in a number of cancers, including cancers of the breast, prostate, kidney, skin, and colon. In the first year of the Cancer Genome Anatomy Project at the National Cancer Institute (NCI), researchers succeeded in identifying more than 300,000 DNA sequences and 12,000 new genes—double the initial expectation. The newly created Cancer Genetics Network will help scientists answer the many clinical questions raised by these discoveries. This national network will link participating cancer research centers and strengthen their efforts not only to identify genes that predispose people to cancer, but also to learn better methods for counseling, testing, and monitoring people for cancer susceptibility. These and other recent advances are providing Americans with our most powerful weapons to defeat cancer: early detection and immediate treatment.

Recognizing the great promise such findings hold for our battle against cancer, my Administration has dedicated unprecedented Federal resources toward cancer research. The omnibus appropriations bill I signed this past October increased funding for the NCI by $400 million. This increase—the single largest increase in funding for cancer and medical research in history—sets the NCI budget at nearly $3 billion, enabling it to fund critical new research, including 10 new clinical trials for breast cancer treatment. Last year we saw one of the most significant advances to date in cancer prevention research with the discoveries from the landmark Breast Cancer Prevention Trial. This study, a national clinical trial sponsored by the NCI, found that the incidence of breast cancer fell by 49 percent among women taking the anti-estrogen drug tamoxifen. Based upon this finding, last October, the Food and Drug Administration approved tamoxifen for preventative use by women at risk for breast cancer.

Through the Department of Defense, we are also awarding $60 million in grants for prostate cancer research. These grants are funding innovative new studies to determine the causes of prostate cancer, develop new methods of prevention and detection, and discover groundbreaking new treatments to save lives. In addition, we have worked to accelerate the approval process for new cancer drugs to ensure that cancer patients have access to the latest and most effective treatments, all while maintaining the highest of safety standards.

Although these and other recent advances are encouraging, we must not be complacent. The occurrence of cancer is still too common, and the suffering it causes is incalculable. As we stand on the threshold of a new millennium, let us draw strength from the successes of the past and reaffirm our determination to treat, prevent, and ultimately eradicate cancer.

In 1938, the Congress of the United States passed a joint resolution (52 Stat. 148; 36 U.S.C. 150) requesting the President to issue an annual proclamation declaring April to be ''Cancer Control Month.''

NOW, THEREFORE, I, WILLIAM J. CLINTON, President of the United States of America, do hereby proclaim April 1999 as Cancer Control Month. I invite the Governors of the 50 States and the Commonwealth of Puerto Rico, the Mayor of the District of Columbia, and the appropriate officials of all other areasunder the American flag to issue similar proclamations. I also ask health care professionals, private industry, community groups, insurance and managed care companies, and all other interested organizations and individuals to unite in renewing our Nation's commitment to controlling cancer.

IN WITNESS WHEREOF, I have hereunto set my hand this first day of April, in the year of our Lord nineteen hundred and ninety-nine, and of the Independence of the United States of America the two hundred and twenty-third.

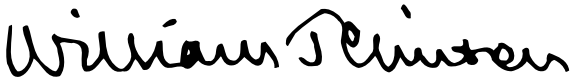

[FR Doc. 99–8819
Filed 4–6–99; 8:45 am]
Billing code 3195–01–P

Presidential Documents

Proclamation 7178 of April 1, 1999

National Child Abuse Prevention Month, 1999

By the President of the United States of America

A Proclamation

Children bring happiness to our lives and hope to our future; they are our greatest joy and our most important responsibility. Whether as loving parents or concerned citizens, we must do everything we can to nurture them, protect them, raise them in an atmosphere of love and respect, and create for them an environment in which they can grow into healthy, well-adjusted, and productive adults.

Tragically, however, statistics confirm that not all of America's children enjoy the benefits of a safe, loving home. Instead, hundreds of thousands of children each year suffer abuse and neglect, most often at the hands of their own parents or other family members. The horrors of physical or emotional trauma deny these young people their childhood, and our abused children carry the psychological scars of their mistreatment throughout their lives. Worse yet, for some—particularly those under 3 years old—the abuse they endure is fatal.

My Administration is committed to promoting effective policies and innovative programs to protect children from harm and to mitigate the stresses on families that can ignite violence in the home. We have implemented a comprehensive agenda that includes increased funding at the State level to ensure that maternal and child health programs are expanded to include child protection, family preservation, and support; we have released prevention grants for community-based family services in all 50 States; and we have worked with the Congress to pass the Adoption and Safe Families Act of 1997, the Violent Crime Control and Law Enforcement Act of 1994, and the National Child Protection Act of 1993, all of which support child abuse prevention efforts in State and local jurisdictions.

Yet government programs alone cannot prevent child abuse. As a society that cares about the health and well-being of our children, we must forge caring, cooperative alliances that include government as a partner, but also involve schools, community organizations, businesses, religious groups, and especially parents and family members themselves—indeed, everyone who has a stake in the future of American families. During this special month, as we focus our Nation's attention on the disturbing problem of child abuse, let us remember that behind every heartbreaking statistic is a child whose health, happiness, and future depend on our ability to recognize the signs of abuse and our refusal to tolerate abuse in our homes and communities.

NOW, THEREFORE, I, WILLIAM J. CLINTON, President of the United States of America, by virtue of the authority vested in me by the Constitution and laws of the United States, do hereby proclaim April 1999 as National Child Abuse Prevention Month. I call upon all Americans to observe this month by demonstrating our gratitude to those who work to keep our children safe, and by taking action in our own communities to make them healthier places in which children can grow and thrive.

IN WITNESS WHEREOF, I have hereunto set my hand this first day of April, in the year of our Lord nineteen hundred and ninety-nine, and of

the Independence of the United States of America the two hundred and twenty-third.

William J. Clinton

[FR Doc. 99–8820
Filed 4–6–99; 8:45 am]
Billing code 3195–01–P

Reader Aids

Federal Register

Vol. 64, No. 66

Wednesday, April 7, 1999

CUSTOMER SERVICE AND INFORMATION

Federal Register/Code of Federal Regulations

General Information, indexes and other finding aids	**202–523–5227**
Laws	**523–5227**
Presidential Documents	
Executive orders and proclamations	**523–5227**
The United States Government Manual	**523–5227**
Other Services	
Electronic and on-line services (voice)	**523–4534**
Privacy Act Compilation	**523–3187**
Public Laws Update Service (numbers, dates, etc.)	**523–6641**
TTY for the deaf-and-hard-of-hearing	**523–5229**

ELECTRONIC RESEARCH

World Wide Web

Full text of the daily Federal Register, CFR and other publications:

http://www.access.gpo.gov/nara

Federal Register information and research tools, including Public Inspection List, indexes, and links to GPO Access:

http://www.nara.gov/fedreg

E-mail

PENS (Public Law Electronic Notification Service) is an E-mail service that delivers information about recently enacted Public Laws. To subscribe, send E-mail to

listproc@lucky.fed.gov

with the text message:

subscribe publaws-l <firstname> <lastname>

Use listproc@lucky.fed.gov only to subscribe or unsubscribe to PENS. We cannot respond to specific inquiries at that address.

Reference questions. Send questions and comments about the Federal Register system to:

info@fedreg.nara.gov

The Federal Register staff cannot interpret specific documents or regulations.

FEDERAL REGISTER PAGES AND DATES, APRIL

15633–15914 1
15915–16332 2
16333–16600 5
16601–16796 6
16797–17078 7

CFR PARTS AFFECTED DURING APRIL

At the end of each month, the Office of the Federal Register publishes separately a List of CFR Sections Affected (LSA), which lists parts and sections affected by documents published since the revision date of each title.

3 CFR

Proclamations:
7177 17075
7178 17077

Executive Orders:
11223 (Amended by EO 13118) 16595
11269 (Amended by EO 13118) 16595
11958 (Amended by EO 13118) 16595
12163 (Amended by EO 13118) 16595
12188 (Amended by EO 13118) 16595
12260 (Amended by EO 13118) 16595
12293 (Amended by EO 13118) 16595
12301 (Amended by EO 13118) 16595
12599 (Amended by EO 13118) 16595
12703 (Amended by EO 13118) 16595
12884 (Amended by EO 13118) 16595
12981 (Amended by EO 13117) 16391
13116 16333
13117 16591
13118 16595

Memorandums:
March 23, 1999 (Amended by EO 13118) 16595

Administrative Orders:
Presidential Determination No. 99-18 of March 25, 1999 16337

5 CFR

351 16797
532 15915
870 16601
890 15633
1200 15916

7 CFR

301 15916
1753 16602

Proposed Rules:
28 15937
340 16364
905 15634
944 15634
1000 16026
1001 16026
1002 16026
1004 16026
1005 16026
1006 16026
1007 16026
1012 16026
1013 16026
1030 16026
1032 16026
1033 16026
1036 16026
1040 16026
1044 16026
1046 16026
1049 16026
1050 16026
1064 16026
1065 16026
1068 16026
1076 16026
1079 16026
1106 16026
1124 16026
1126 16026
1131 16026
1134 16026
1135 16026
1137 16026
1138 16026
1139 16026

9 CFR

1 15918
3 15918

Proposed Rules:
93 16655
201 15938

10 CFR

2 ..... 15636, 15920
10 15636
11 15636
25 15636
95 15636

Proposed Rules:
170 15876
171 15876

12 CFR

213 16612
226 16614
330 15653
611 16617
620 16617
935 ..... 16618, 16788

Proposed Rules:
933 16792
934 16792
935 16792

13 CFR

Proposed Rules:
120 15942
121 15708

14 CFR

39 ..... 15657, 15659, 15661,

15669, 15920, 16339, 16621, 16624, 16625, 16801, 16803, 16805, 16808, 16810
71 .....15673, 15674, 15675, 15676, 15678, 15679, 16024, 16340, 16341, 16342, 16343, 16344
91.....15912
Proposed Rules:
39 .....16364, 16366, 16656
71 .....15708, 16024, 16368, 16369, 16370, 16371
119.....16298
121.....16298
129.....16298
135.....16298
183.....16298

17 CFR

275.....15680
279.....15680

19 CFR

178.....16635
192.....16635
10.....16345
18.....16345
113.....16345
178.....16345
Proposed Rules:
19.....16865
146.....15873

21 CFR

26.....16347
510.....15683
520.....15683, 15684
522.....15683, 15685
558.....15683
Proposed Rules:
1.....15944
101.....15948

22 CFR

Ch. II.....15685
Ch. VI.....15686

23 CFR

Proposed Rules:
777.....16870

24 CFR

100.....16324

26 CFR

1.....15686, 15687
7.....15687
31.....15687
301.....16640
602 .....15687, 15688, 15873
Proposed Rules:
1.....16372

30 CFR

Proposed Rules:
206.....15949

33 CFR

100 .....16348, 16812, 16813
117.....16350, 16641
165 .....16348, 16641, 16642
Proposed Rules:
175.....15709
177.....15709
179.....15709
181.....15709
183.....15709

39 CFR

111.....16814

40 CFR

52.....15688, 15922
90.....16526
180 .....16840, 16843, 16850, 16856
261.....16643
300.....15926, 16351
Proposed Rules:
52 .....15711, 15949, 16659
70.....16659
82.....16373
180.....16874
185.....16874
186.....16874

41 CFR

Ch. 301.....16352
60-250.....15690
60-999.....15690

45 CFR

Proposed Rules:
1635.....16383

46 CFR

Proposed Rules:
10.....15709
15.....15709
24.....15709
25.....15709
26.....15709
28.....15709
70.....15709
169.....15709
175.....15709

47 CFR

69.....16353
Proposed Rules:
0.....16388
1.....16661
2.....16687
25.....16880
25.....16687
69.....16389
73 .....15712, 15713, 15714, 15715, 16388, 16396
76.....16388

48 CFR

701.....16647
703.....16647
715.....16647
731.....16647
752.....16647
909.....16649
970.....16649
1333.....16651

49 CFR

195.....15926
533.....16860
571.....16358
581.....16359
Proposed Rules:
171.....16882
177.....16882
178.....16882
180.....16882
192.....16882, 16885
195.....16882, 16885
578.....16690
611.....17062

50 CFR

17.....15691
600.....16862
648 .....15704, 16361, 16362
660.....16862
679 .....16361, 16362, 16654
Proposed Rules:
17.....16397, 16890
223.....16396, 16397
224.....16397
226.....16397
600.....16414
648.....16417, 16891

REMINDERS

The items in this list were editorially compiled as an aid to Federal Register users. Inclusion or exclusion from this list has no legal significance.

RULES GOING INTO EFFECT APRIL 7, 1999

ENVIRONMENTAL PROTECTION AGENCY

Pesticides; tolerances in food, animal feeds, and raw agricultural commodities:

Avermectin; published 4-7-99

Propamocarb hydrochloride; published 4-7-99

Tebufenozide; published 4-7-99

Trichloderma hazianum KRL-AG2(ATCC →20847) etc.; published 4-7-99

HEALTH AND HUMAN SERVICES DEPARTMENT

Food and Drug Administration

Human drugs:

Drug products discontinued from sale for reasons of safety or effectiveness; list; published 3-8-99

Medical devices:

Ear, nose, and throat devices—

Nasal dilator, intranasal splint, and bone particle collector; published 3-8-99

SECURITIES AND EXCHANGE COMMISSION

Securities:

Compensatory benefit arrangements; offers and sales exemption; published 3-8-99

Form S-8; securities offer and sale to consultants and advisors, and exercise of stock options by family members of employee optionees; published 3-8-99

Seed capital exemption; published 3-8-99

STATE DEPARTMENT

Privacy Act; implementation; published 3-8-99

TRANSPORTATION DEPARTMENT

Federal Aviation Administration

Airworthiness directives:

Eurocopter France; published 3-3-99

Sikorsky; published 3-23-99

COMMENTS DUE NEXT WEEK

AGRICULTURE DEPARTMENT

Agricultural Marketing Service

Avocados grown in—

South Florida; comments due by 4-16-99; published 3-17-99

Prunes (dried) produced in California; comments due by 4-15-99; published 1-25-99

AGRICULTURE DEPARTMENT

Farm Service Agency

Program regulations:

Preferred lender program implementation and guaranteed loan regulations streamlining; comments due by 4-13-99; published 2-12-99

AGRICULTURE DEPARTMENT

Rural Business-Cooperative Service

Program regulations:

Preferred lender program implementation and guaranteed loan regulations streamlining; comments due by 4-13-99; published 2-12-99

AGRICULTURE DEPARTMENT

Rural Housing Service

Program regulations:

Preferred lender program implementation and guaranteed loan regulations streamlining; comments due by 4-13-99; published 2-12-99

AGRICULTURE DEPARTMENT

Rural Utilities Service

Program regulations:

Preferred lender program implementation and guaranteed loan regulations streamlining; comments due by 4-13-99; published 2-12-99

COMMERCE DEPARTMENT

Census Bureau

Foreign trade statistics:

Automated Export System; shipper's export data; electronic filing; comments due by 4-13-99; published 2-12-99

COMMERCE DEPARTMENT

National Oceanic and Atmospheric Administration

Fisheries assistance programs; fishing capacity reduction program; comments due by 4-12-99; published 2-11-99

Fishery conservation and management:

Northeastern United States fisheries—

Northeast multispecies; comments due by 4-13-99; published 3-29-99

DEFENSE DEPARTMENT

Federal Acquisition Regulation (FAR):

Progress payments and related financing policies; comments due by 4-12-99; published 2-10-99

EDUCATION DEPARTMENT

Special education and rehabilitative services:

Infants and toddlers with disabilities early intervention program; advice and recommendations request; comments due by 4-12-99; published 3-12-99

ENVIRONMENTAL PROTECTION AGENCY

Air pollutants, hazardous; national emission standards:

Secondary aluminum production; comments due by 4-12-99; published 2-11-99

Air pollution control; new motor vehicles and engines:

New nonroad spark-ignition engines rated above 19 kilowatts and new land-based recreational spark-ignition engines; comments due by 4-12-99; published 2-8-99

Air quality implementation plans; approval and promulgation; various States:

Delaware; comments due by 4-12-99; published 3-11-99

Iowa; comments due by 4-12-99; published 3-11-99

Kentucky; comments due by 4-14-99; published 3-15-99

Air quality implementation plans; approval and promulgation; various States; air quality planning purposes; designation of areas:

Ohio; comments due by 4-16-99; published 3-17-99

Air quality implementation plans; approval and promulgation; various States:

Oregon; comments due by 4-14-99; published 3-15-99

Texas; comments due by 4-14-99; published 3-15-99

Hazardous waste:

Mixed low-level radioactive waste; storage, treatment, and disposition; comments due by 4-15-99; published 3-1-99

FEDERAL COMMUNICATIONS COMMISSION

Common carrier services:

Inter-carrier compensation for Internet service provider (ISP)-bound traffic; comments due by 4-12-99; published 3-24-99

Radio broadcasting:

Broadcast and cable EEO rules and policies; extension; comments due by 4-15-99; published 4-5-99

Low power FM radio service; creation and operation; comments due by 4-12-99; published 2-16-99

FEDERAL HOUSING FINANCE BOARD

Federal home loan bank system:

Consolidated obligations; joint and several liability allocation; comments due by 4-12-99; published 2-11-99

FEDERAL RETIREMENT THRIFT INVESTMENT BOARD

Thrift savings plan:

Death benefits; transfer into G Fund after participant's death; comments due by 4-12-99; published 2-11-99

GENERAL SERVICES ADMINISTRATION

Federal Acquisition Regulation (FAR):

Progress payments and related financing policies; comments due by 4-12-99; published 2-10-99

Federal property management:

Purchase or lease determinations guidelines and use of private inspection, testing, and grading services; comments due by 4-12-99; published 2-10-99

Federal travel:

Travel and relocation expenses test programs; comments due by 4-12-99; published 2-10-99

HEALTH AND HUMAN SERVICES DEPARTMENT

Children and Families Administration

Personal Responsibility and Work Opportunity

Reconciliation Act of 1996; implementation:

Child support enforcement program; revision or elimination of obsolete or inconsistent provisions; comments due by 4-12-99; published 2-9-99

HEALTH AND HUMAN SERVICES DEPARTMENT

Food and Drug Administration

Food for human consumption:

Food labeling—

Nutrient content claims; ''healthy'' definition; partial stay extension; comments due by 4-15-99; published 3-16-99

Human drugs and biological products:

In vivo radiopharmaceuticals used for diagnosis and monitoring—

Evaluation and approval; developing medical imaging drugs and biologics; guidance availability; comments due by 4-14-99; published 2-16-99

HEALTH AND HUMAN SERVICES DEPARTMENT

Health Care Financing Administration

Medicare:

Outpatient diabetes self-management training services; expanded coverage; comments due by 4-12-99; published 2-11-99

HOUSING AND URBAN DEVELOPMENT DEPARTMENT

Fair housing:

Fair Housing Act violations; civil penalties; comments due by 4-12-99; published 2-10-99

INTERIOR DEPARTMENT

Minerals Management Service

Royalty management:

Audit functions; delegation to States; comments due by 4-12-99; published 2-10-99

Federal and Indian leases; oil valuation; comments due by 4-12-99; published 3-12-99

INTERIOR DEPARTMENT

Reclamation Bureau

Farm operation in excess 960 acres, information requirements; and formerly excess land eligibility to receive non-full cost irrigation water; comments due by 4-12-99; published 3-11-99

INTERIOR DEPARTMENT

Surface Mining Reclamation and Enforcement Office

Permanent program and abandoned mine land reclamation plan submissions:

Pennsylvania; comments due by 4-12-99; published 3-12-99

Surface coal mining and reclamation operations:

Ownership and control mining operations; definitions, permit requirements, enforcement actions, etc.; comments due by 4-15-99; published 3-31-99

JUSTICE DEPARTMENT

Drug Enforcement Administration

Records, reports, and exports of listed chemicals:

Chemical mixtures that contain regulated chemicals; comments due by 4-16-99; published 2-12-99

JUSTICE DEPARTMENT

Immigration and Naturalization Service

Immigration:

Aliens—

Employment eligibility verification; acceptable receipts; comments due by 4-12-99; published 2-9-99

JUSTICE DEPARTMENT

Illegal Immigration Reform and Immigrant Responsibility Act and Debt Collection Improvement Act; implementation:

Employer sanctions, unfair immigration-related employment practice cases, and immigration-related document fraud; comments due by 4-13-99; published 2-12-99

NATIONAL AERONAUTICS AND SPACE ADMINISTRATION

Federal Acquisition Regulation (FAR):

Progress payments and related financing policies; comments due by 4-12-99; published 2-10-99

SECURITIES AND EXCHANGE COMMISSION

Securities and investment companies:

Electronic Data Gathering, Analysis, and Retrieval (EDGAR) system modernization; comments due by 4-15-99; published 3-16-99

Securities:

International disclosure standards; foreign private issuers conformance; comments due by 4-12-99; published 2-9-99

Registered broker dealers and transfer agents and Year 2000 compliance; operational capability requirements; comments due by 4-12-99; published 3-11-99

TRANSPORTATION DEPARTMENT

Coast Guard

Drawbridge operations:

Florida; comments due by 4-12-99; published 2-9-99

Massachusetts; comments due by 4-14-99; published 3-15-99

Ports and waterways safety:

Hudson River, NY; safety zone; comments due by 4-13-99; published 2-12-99

TRANSPORTATION DEPARTMENT

Federal Aviation Administration

Airworthiness directives:

Fairchild; comments due by 4-12-99; published 2-18-99

Fokker; comments due by 4-14-99; published 3-15-99

McDonnell Douglas; comments due by 4-16-99; published 3-2-99

Rolls-Royce Ltd.; comments due by 4-12-99; published 2-10-99

Texton Lycoming; comments due by 4-12-99; published 2-10-99

Class E airspace; comments due by 4-15-99; published 3-8-99

Restricted areas; comments due by 4-12-99; published 2-26-99

TRANSPORTATION DEPARTMENT

National Highway Traffic Safety Administration

Fuel economy standards:

Passenger autombiles; low volume manufacturer exemptions; comments due by 4-12-99; published 3-11-99

TREASURY DEPARTMENT

Alcohol, Tobacco and Firearms Bureau

Alcoholic beverages:

Distilled spirits, wine, and malt beverages; labeling and advertising—

Fill standards; comments due by 4-12-99; published 2-9-99

TREASURY DEPARTMENT

Customs Service

Automated Export System:

Shipper's export declarations and outbound vessel manifest information; electronic transmission; cross reference to Census Bureau regulations; comments due by 4-13-99; published 2-12-99

TREASURY DEPARTMENT

Internal Revenue Service

Income taxes:

Group-term life insurance coverage costs; uniform premium table; comments due by 4-13-99; published 1-13-99

Procedure and administration:

Timely mailing treated as timely filing/electronic postmark; comments due by 4-15-99; published 1-15-99

LIST OF PUBLIC LAWS

This is a continuing list of public bills from the current session of Congress which have become Federal laws. It may be used in conjunction with ''P L U S'' (Public Laws Update Service) on 202–523–6641. This list is also available online at http://www.nara.gov/fedreg.

The text of laws is not published in the **Federal Register** but may be ordered in ''slip law'' (individual pamphlet) form from the Superintendent of Documents, U.S. Government Printing Office, Washington, DC 20402 (phone, 202–512–1808). The text will also be made available on the Internet from GPO Access at http://www.access.gpo.gov/nara/index.html. Some laws may not yet be available.

S. 314/P.L. 106–8

Small Business Year 2000 Readiness Act (Apr. 2, 1999; 113 Stat. 13)

H.R. 68/P.L. 106–9

Small Business Investment Improvement Act of 1999 (Apr. 5, 1999; 113 Stat. 17)

H.R. 92/P.L. 106–10

To designate the Federal building and United States

courthouse located at 251 North Main Street in Winston-Salem, North Carolina, as the ''Hiram H. Ward Federal Building and United States Courthouse''. (Apr. 5, 1999; 113 Stat. 20)

H.R. 158/P.L. 106–11

To designate the United States courthouse located at 316 North 26th Street in Billings, Montana, as the ''James F. Battin United States Courthouse''. (Apr. 5, 1999; 113 Stat. 21)

H.R. 233/P.L. 106–12

To designate the Federal building located at 700 East San Antonio Street in El Paso, Texas, as the ''Richard C. White Federal Building''. (Apr. 5, 1999; 113 Stat. 22)

H.R. 396/P.L. 106–13

To designate the Federal building located at 1301 Clay Street in Oakland, California, as the ''Ronald V. Dellums Federal Building''. (Apr. 5, 1999; 113 Stat. 23)

Last List April 5, 1999.

Public Laws Electronic Notification Service (PENS)

PENS is a free electronic mail notification service of newly enacted public laws. To subscribe, send E-mail to **listproc@lucky.fed.gov** with the text message:

subscribe PUBLAWS-L Your Name.

Note: This service is strictly for E-mail notification of new public laws. The text of laws is not available through this service. **PENS** cannot respond to specific inquiries sent to this address.