10–6–99
Vol. 64 No. 193
Pages 54199–54498

federal register

Wednesday
October 6, 1999

The **FEDERAL REGISTER** is published daily, Monday through Friday, except official holidays, by the Office of the Federal Register, National Archives and Records Administration, Washington, DC 20408, under the Federal Register Act (44 U.S.C. Ch. 15) and the regulations of the Administrative Committee of the Federal Register (1 CFR Ch. I). The Superintendent of Documents, U.S. Government Printing Office, Washington, DC 20402 is the exclusive distributor of the official edition.

The **Federal Register** provides a uniform system for making available to the public regulations and legal notices issued by Federal agencies. These include Presidential proclamations and Executive Orders, Federal agency documents having general applicability and legal effect, documents required to be published by act of Congress, and other Federal agency documents of public interest.

Documents are on file for public inspection in the Office of the Federal Register the day before they are published, unless the issuing agency requests earlier filing. For a list of documents currently on file for public inspection, see http://www.nara.gov/fedreg.

The seal of the National Archives and Records Administration authenticates the Federal Register as the official serial publication established under the Federal Register Act. Under 44 U.S.C. 1507, the contents of the **Federal Register** shall be judicially noticed.

The **Federal Register** is published in paper and on 24x microfiche. It is also available online at no charge as one of the databases on GPO Access, a service of the U.S. Government Printing Office.

The online edition of the **Federal Register** is issued under the authority of the Administrative Committee of the Federal Register as the official legal equivalent of the paper and microfiche editions (44 U.S.C. 4101 and 1 CFR 5.10). It is updated by 6 a.m. each day the **Federal Register** is published and it includes both text and graphics from Volume 59, Number 1 (January 2, 1994) forward.

GPO Access users can choose to retrieve online **Federal Register** documents as TEXT (ASCII text, graphics omitted), PDF (Adobe Portable Document Format, including full text and all graphics), or SUMMARY (abbreviated text) files. Users should carefully check retrieved material to ensure that documents were properly downloaded.

On the World Wide Web, connect to the **Federal Register** at http://www.access.gpo.gov/nara. Those without World Wide Web access can also connect with a local WAIS client, by Telnet to swais.access.gpo.gov, or by dialing (202) 512-1661 with a computer and modem. When using Telnet or modem, type swais, then log in as guest with no password.

For more information about GPO Access, contact the GPO Access User Support Team by E-mail at gpoaccess@gpo.gov; by fax at (202) 512–1262; or call (202) 512–1530 or 1–888–293–6498 (toll free) between 7 a.m. and 5 p.m. Eastern time, Monday–Friday, except Federal holidays.

The annual subscription price for the **Federal Register** paper edition is $555, or $607 for a combined **Federal Register,** Federal Register Index and List of CFR Sections Affected (LSA) subscription; the microfiche edition of the **Federal Register** including the Federal Register Index and LSA is $220. Six month subscriptions are available for one-half the annual rate. The charge for individual copies in paper form is $8.00 for each issue, or $8.00 for each group of pages as actually bound; or $1.50 for each issue in microfiche form. All prices include regular domestic postage and handling. International customers please add 25% for foreign handling. Remit check or money order, made payable to the Superintendent of Documents, or charge to your GPO Deposit Account, VISA, MasterCard or Discover. Mail to: New Orders, Superintendent of Documents, P.O. Box 371954, Pittsburgh, PA 15250–7954.

There are no restrictions on the republication of material appearing in the **Federal Register.**

How To Cite This Publication: Use the volume number and the page number. Example: 64 FR 12345.

SUBSCRIPTIONS AND COPIES

PUBLIC	
Subscriptions:	
Paper or fiche	**202–512–1800**
Assistance with public subscriptions	**512–1806**
General online information	**202–512–1530; 1–888–293–6498**
Single copies/back copies:	
Paper or fiche	**512–1800**
Assistance with public single copies	**512–1803**
FEDERAL AGENCIES	
Subscriptions:	
Paper or fiche	**523–5243**
Assistance with Federal agency subscriptions	**523–5243**

Printed on recycled paper.

Contents

Federal Register

Vol. 64, No. 193

Wednesday, October 6, 1999

Administration on Aging
See Aging Administration

Agency for Health Care Policy and Research
NOTICES
Meetings:
Health Services Research Initial Review Group; correction, 54329

Aging Administration
NOTICES
Grant and cooperative agreement awards:
National Council on the Aging et al., 54329

Arts and Humanities, National Foundation
See National Foundation on the Arts and the Humanities

Centers for Disease Control and Prevention
NOTICES
Meetings:
Healthcare Infection Control Practices Advisory Committee, 54329
National Institute for Occupational Safety and Health—
Scientific Counselors Board, 54329–54330

Children and Families Administration
NOTICES
Organization, functions, and authority delegations:
Children, Youth and Families Administration et al., 54330–54334

Coast Guard
PROPOSED RULES
Ports and waterways safety:
New York Harbor, NY; safety zone, 54252–54254

Commerce Department
See National Oceanic and Atmospheric Administration

Consumer Product Safety Commission
NOTICES
Agency information collection activities:
Proposed collection; comment request, 54276–54277

Copyright Office, Library of Congress
NOTICES
Privacy Act:
Systems of records, 54361–54364

Defense Department
See Navy Department
NOTICES
Meetings:
Strategic Command Strategic Advisory Group, 54277

Drug Enforcement Administration
NOTICES
Applications, hearings, determinations, etc.:
ISP Freetown Fine Chemicals, Inc., 54356
Pettigrew Rexall Drugs, 54356–54357
Research Triangle Institute, 54357

Education Department
PROPOSED RULES
Elementary and secondary education:
Safe and Drug-Free Schools and Communities Act Native Hawaiian Program, 54254–54255
NOTICES
Grantback arrangements; award of funds:
Ohio, 54443–54445
Grants and cooperative agreements; availability, etc.:
Postsecondary education—
Improvement fund, 54278–54279
Special education and rehabilitative services—
Children with disabilities programs; correction, 54279

Employment and Training Administration
NOTICES
Agency information collection activities:
Proposed collection; comment request, 54413–54442

Energy Department
See Federal Energy Regulatory Commission
See Southwestern Power Administration
NOTICES
Meetings:
Basic Energy Sciences Advisory Committee, 54281
Environmental Management Site-Specific Advisory Board—
Paducah Gaseous Diffusion Plant, KY, 54281–54282
Pantex Plant, TX, 54282
Reports and guidance documents; availability, etc.:
Environmental cleanup program at sites; long-term stewardship activities and issues; national study, 54279–54281

Environmental Protection Agency
RULES
Pesticides; tolerances in food, animal feeds, and raw agricultural commodities:
Imazapic-ammonium, 54218–54224
NOTICES
Agency information collection activities:
Reporting and recordkeeping requirements, 54295–54296
Environmental statements; availability, etc.:
Coastal nonpoint pollution control programs; States and territories—
Maryland, 54274
Pesticide, food, and feed additive petitions:
American Cyanamid Co., 54300–54303
Pesticide programs:
Organophosphates; risk assessments and public participation in risk management—
Chlorpyrifos methyl, 54296–54298
Naled and temephos, 54298–54300
Pesticide registration, cancellation, etc.:
Colgate-Palmolive Co., 54303–54304
Quimica, 54304–54305
Toxic and hazardous substances control:
New chemicals; receipt and status information, 54307–54316
Premanufacture exemption approvals, 54305–54307, 54316–54317

Federal Aviation Administration
RULES
Airworthiness directives:
Bombardier, 54199–54200
Eurocopter France, 54200–54201
McDonnell Douglas, 54202–54203
Class E airspace, 54203–54206
PROPOSED RULES
Airworthiness directives:
Airbus, 54248–54252
Boeing, 54227–54230, 54240–54242, 54246–54248
Fairchild, 54242–54245
Lockheed, 54230–54234
REVO, Inc., 54234–54237
Short Brothers, 54237–54240
Commercial space transportation:
Licensed reentry activities; financial responsibility requirements, 54447–54472
NOTICES
Meetings:
RTCA, Inc., 54399
Reports and guidance documents; availability, etc.:
Transport airplane flight decks certification; human factors certification plans, 54399–54410

Federal Communications Commission
RULES
Radio stations; table of assignments:
California, 54224–54225
New York, 54225
Television broadcasting:
Broadcast television; national ownership rule compliance Effective date, 54225
PROPOSED RULES
Digital television stations; table of assignments:
Oklahoma, 54268–54269
Oregon, 54269
Radio stations; table of assignments:
Colorado, 54270
New York, 54269–54270
NOTICES
Agency information collection activities:
Submission for OMB review; comment request, 54317–54319

Federal Deposit Insurance Corporation
NOTICES
Agency information collection activities:
Proposed collection; comment request, 54319–54320

Federal Energy Regulatory Commission
NOTICES
Electric rate and corporate regulation filings:
Strategic Energy, L.L.C., et al., 54287–54288
Electric utilities (Federal Power Act):
Open access same-time information system (OASIS) and standards of conduct—
Coral Power, L.L.C., et al.; motion for clarification, 54289–54290
Hydroelectric applications, 54290–54291
National Register of Historic Places:
Programmatic agreement for managing properties; restricted service list—
Pacific Gas & Electric Co.; correction, 54291–54292
Applications, hearings, determinations, etc.:
Destin Pipeline Co., L.L.C., 54282–54283
Dow Intrastate Gas Co., 54283
Natural Gas Pipeline Co. of America, 54283
Northwest Pipeline Corp., 54283–54284
Panhandle Eastern Pipe Line Co. et al., 54284
PG&E Gas Transmission, Northwest Corp., 54284
Questar Pipeline Co., 54285
Tennessee Gas Pipeline Co., 54285–54286
TransColorado Gas Transmission Co., 54286
Trunkline Gas Co., 54286–54287

Federal Railroad Administration
NOTICES
Orders:
Automatic train control and advanced civil speed enforcement system; requirements for Northeast Corridor railroads, 54410

Federal Reserve System
NOTICES
Banks and bank holding companies:
Change in bank control, 54320–54321
Formations, acquisitions, and mergers, 54321
Formations, acquisitions, and mergers; correction, 54321
Permissible nonbanking activities, 54321–54322
Permissible nonbanking activities; correction, 54321
Privacy Act:
Systems of records, 54322–54324

Federal Trade Commission
NOTICES
Agency information collection activities:
Proposed collection; comment request, 54324–54328
Prohibited trade practices:
Castrol North America, Inc., 54328–54329
Reports and guidance documents; availability, etc.:
Antitrust guidelines for collaborations among competitors; request for views, 54483–54497

Fish and Wildlife Service
NOTICES
Endangered and threatened species permit applications, 54349–54350
Environmental statements; availability, etc.:
Incidental take permits—
Yolo County, CA; valley elderberry longhorn beetle, 54350–54351
Marine mammals permit applications, 54351

Food and Drug Administration
NOTICES
Agency information collection activities:
Submission for OMB review; comment request, 54334–54335
Meetings:
Anti-Infective Drugs Advisory Committee, 54335
Risk Management in Diverse Society; Consumer Round Table, 54335–54336

Health and Human Services Department
See Agency for Health Care Policy and Research
See Aging Administration
See Centers for Disease Control and Prevention
See Children and Families Administration
See Food and Drug Administration
See Health Care Financing Administration
See National Institutes of Health
See Public Health Service
See Substance Abuse and Mental Health Services Administration

Health Care Financing Administration
PROPOSED RULES
Medicaid:
Flexibility in payment methods for services of hospitals, nursing facilities, and intermediate care facilities for mentally retarded, 54263–54268

Housing and Urban Development Department
NOTICES
Grant and cooperative agreement awards:
Community Outreach Partnership Centers Program, 54346–54347
Hispanic-serving Institutions Assisting Communities Program, 54348

Interior Department
See Fish and Wildlife Service
See Land Management Bureau
NOTICES
Environmental statements; availability, etc.:
Central Utah Project—
Diamond Fork System, Bonneville Unit, 54349

International Trade Commission
NOTICES
Import investigations:
Brass sheet and strip from—
Various countries, 54352–54353
Cooking ware from—
Various countries, 54353
Electrolytic manganese dioxide from—
Greece and Japan, 54353–54354
Pipe and tube from—
Various countries, 54354–54355
Sugar and syrups from—
Various countries, 54355–54356

Justice Department
See Drug Enforcement Administration

Labor Department
See Employment and Training Administration
See Labor Statistics Bureau
See Occupational Safety and Health Administration
NOTICES
Agency information collection activities:
Submission for OMB review; comment request, 54357–54358

Labor Statistics Bureau
NOTICES
Meetings:
Business Research Advisory Council, 54358

Land Management Bureau
NOTICES
Environmental statements; availability, etc.:
Taos Field Office, NM, et al.; riparian and aquatic habitat management plans, 54351–54352

Library of Congress
See Copyright Office, Library of Congress

Medicare Payment Advisory Commission
NOTICES
Meetings, 54364

National Aeronautics and Space Administration
PROPOSED RULES
Acquisition regulations:
Central Contractor Registration, 54270–54272

National Credit Union Administration
NOTICES
Meetings; Sunshine Act, 54364

National Foundation on the Arts and the Humanities
NOTICES
Meetings:
Combined Arts Advisory Panel, 54365

National Highway Traffic Safety Administration
NOTICES
Meetings:
Emerging vehicle technologies; strategies addressing potential for driver distractions, 54410

National Institutes of Health
NOTICES
Inventions, Government-owned; availability for licensing, 54336–54338
Meetings:
Director's Council of Public Representatives, 54338
National Center for Research Resources, 54338
National Heart, Lung, and Blood Institute, 54338–54339
National Institute of Allergy and Infectious Diseases, 54341
National Institute of Environmental Health Sciences, 54340–54341
National Institute of General Medical Sciences, 54339
National Institute of Neurological Disorders and Stroke, 54339
National Institute on Aging, 54340–54341
National Institute on Deafness and Other Communication Disorders, 54339–54340
Scientific Review Center, 54341–54343

National Oceanic and Atmospheric Administration
RULES
Fishery conservation and management:
Alaska; fisheries of Exclusive Economic Zone—
Pacific cod, 54225–54226
PROPOSED RULES
Environmental statements; notice of intent:
Western Pacific Region; Exclusive Economic Zone; pelagics fisheries, 54272–54273
NOTICES
Environmental statements; availability, etc.:
Coastal nonpoint pollution control programs; States and territories—
Maryland, 54274
Grants and cooperative agreements; availability, etc.:
Climate and Global Change Program, 54274–54275
Meetings:
New England Fishery Management Council, 54275
Permits:
Marine mammals, 54275
Reports and guidance documents; availability, etc.:
Eastern North Pacific gray whale research and monitoring; status review, 54275–54276

National Science Foundation
NOTICES
Meetings:
Biological Sciences Special Emphasis Panel, 54365

Chemical and Transport Systems Special Emphasis Panel, 54365–54366
Chemistry Special Emphasis Panel, 54366
Computer-Communications Research Special Emphasis Panel, 54366
Design, Manufacture, and Industrial Innovation Special Emphasis Panel, 54366–54367
Developmental Mechanisms Advisory Panel, 54367
Earth Sciences Proposal Review Panel, 54367
Information and Intelligent Systems Special Emphasis Panel, 54367–54368
Information, Robotics, and Intelligent Systems Special Emphasis Panel, 54368
Materials Research Special Emphasis Panel, 54368–54369
Mathematical and Physical Sciences Advisory Committee, 54369–54370
Mathematical Sciences Special Emphasis Panel, 54370
Polar Programs Advisory Committee, 54370

Navy Department
NOTICES
Inventions, Government-owned; availability for licensing; correction, 54277–54278

Nuclear Regulatory Commission
NOTICES
Operating licenses, amendments; no significant hazards considerations; biweekly notices, 54370–54393
Applications, hearings, determinations, etc.:
TXU Electric Co., 54370

Occupational Safety and Health Administration
NOTICES
Reports and guidance documents; availability, etc.:
Voluntary employer safety and health self-audits; policy statement, 54358–54361

Postal Service
PROPOSED RULES
Domestic Mail Manual:
Special services labels; barcode requirements, 54255–54263

Public Debt Bureau
NOTICES
Agency information collection activities:
Proposed collection; comment request, 54411

Public Health Service
See Agency for Health Care Policy and Research
See Centers for Disease Control and Prevention
See Food and Drug Administration
See National Institutes of Health
See Substance Abuse and Mental Health Services Administration
PROPOSED RULES
Grants:
Health professions, nursing, public health, and allied health training grant program regulations removed, 54263
NOTICES
Meetings:
National Toxicology Program—
Carcinogens report; review procedures and listing criteria, 54343–54345

Research and Special Programs Administration
NOTICES
Hazardous materials transportation:
Preemption determinations, 54473–54481

Small Business Administration
NOTICES
Disaster loan areas:
Connecticut, 54394
Delaware, 54394–54395
Florida, 54395
Maryland, 54395
New Jersey, 54395–54396
New York, 54396
North Carolina, 54396–54397
Pennsylvania, 54397
South Carolina, 54397–54398
Virginia, 54398
Applications, hearings, determinations, etc.:
Bever Capital Corp., 54393
Diamond Capital Corp., 54393
Everlast Capital Corp., 54393–54394
Formosa Capital Corp., 54394
Orange Nassau Capital Corp., 54394
TBM II Capital Corp., 54394
Vadus Capital Corp., 54394

Southwestern Power Administration
NOTICES
Power rates:
Robert D. Willis Project, TX, 54292–54293
Sam Rayburn Dam Project, 54293–54295

State Department
NOTICES
Privacy Act:
Systems of records, 54398

Substance Abuse and Mental Health Services Administration
NOTICES
Agency information collection activities:
Proposed collection; comment request, 54345–54346

Transportation Department
See Coast Guard
See Federal Aviation Administration
See Federal Railroad Administration
See National Highway Traffic Safety Administration
See Research and Special Programs Administration

Treasury Department
See Public Debt Bureau
NOTICES
Organization, functions, and authority delegations:
Under Secretary for Domestic Finance, 54411

United States Information Agency
NOTICES
Art objects; importation for exhibition:
Gold of the Nomads: Scythian Treasures from Ancient Ukraine, 54411–54412

Veterans Affairs Department
RULES
Adjudication; pensions, compensation, dependency, etc.:
Returned and canceled checks following death of payee, 54206–54207

Medical benefits:
Veterans' Health Care Eligibility Reform Act of 1996; implementation—
National enrollment system; provision of hospital and outpatient care, 54207–54218

Separate Parts In This Issue

Part II
Department of Labor, Employment and Training Administration, 54413–54442

Part III
Department of Education, 54443–54445

Part IV
Department of Transportation, Federal Aviation Administration, 54447–54472

Part V
Department of Transportation, Research and Special Programs Administratiob, 54473–54481

Part VI
Federal Trade Commission, 54483–54497

Reader Aids

Consult the Reader Aids section at the end of this issue for phone numbers, online resources, finding aids, reminders, and notice of recently enacted public laws.

CFR PARTS AFFECTED IN THIS ISSUE

A cumulative list of the parts affected this month can be found in the Reader Aids section at the end of this issue.

14 CFR
39 (3 documents) 54199, 54200, 54202
71 (8 documents) 54203, 54204, 54205, 54206
Proposed Rules:
39 (12 documents) 54227, 54229, 54230, 54232, 54234, 54237, 54239, 54240, 54242, 54246, 54248, 54249
450.....54448

33 CFR
Proposed Rules:
165.....54242

34 CFR
Proposed Rules:
75.....54254

38 CFR
3.....54206
17.....54207

39 CFR
Proposed Rules:
111.....54255

40 CFR
180.....54218

42 CFR
Proposed Rules:
57.....54263
58.....54263
447.....54263

47 CFR
73 (3 documents) 54224, 54225
Proposed Rules:
73 (4 documents) 54268, 54269, 54270

48 CFR
Proposed Rules:
1804.....54270
1812.....54270
1852.....54270

50 CFR
679.....54225
Proposed Rules:
660.....54272

Rules and Regulations

Federal Register
Vol. 64, No. 193
Wednesday, October 6, 1999

This section of the FEDERAL REGISTER contains regulatory documents having general applicability and legal effect, most of which are keyed to and codified in the Code of Federal Regulations, which is published under 50 titles pursuant to 44 U.S.C. 1510.

The Code of Federal Regulations is sold by the Superintendent of Documents. Prices of new books are listed in the first FEDERAL REGISTER issue of each week.

DEPARTMENT OF TRANSPORTATION

Federal Aviation Administration

14 CFR Part 39

[Docket No. 98–NM–321–AD; Amendment 39–11352; AD 99–21–09]

RIN 2120–AA64

Airworthiness Directives; Bombardier Model DHC–8–102, –103, –106, –201, –202, –301, –311, and –315 Series Airplanes

AGENCY: Federal Aviation Administration, DOT.

ACTION: Final rule.

SUMMARY: This amendment supersedes an existing airworthiness directive (AD), applicable to certain Bombardier Model DHC–8–102, –103, –106, –201, –202, –301, –311, and –315 series airplanes, that currently requires a one-time inspection to detect chafing of electrical wires in the cable trough below the cabin floor; repair, if necessary; installation of additional tie-mounts and tie-wraps; and application of sealant to rivet heads. This amendment requires the accomplishment of these same actions on additional airplanes. This amendment is prompted by issuance of mandatory continuing airworthiness information by a foreign civil airworthiness authority. The actions specified by this AD are intended to prevent chafing of electrical wires, which could result in an uncommanded shutdown of an engine during flight.

DATES: Effective November 10, 1999.

The incorporation by reference of Bombardier Service Bulletin S.B. 8–53–66, dated March 27, 1998, as listed in the regulations was approved previously by the Director of the Federal Register as of October 27, 1998 (63 FR 50501, September 22, 1998).

ADDRESSES: The service information referenced in this AD may be obtained from Bombardier, Inc., Bombardier Regional Aircraft Division, Garratt Boulevard, Downsview, Ontario M3K 1Y5, Canada. This information may be examined at the Federal Aviation Administration (FAA), Transport Airplane Directorate, Rules Docket, 1601 Lind Avenue, SW., Renton, Washington; or at the FAA, Engine and Propeller Directorate New York Aircraft Certification Office, 10 Fifth Street, Third Floor, Valley Stream, New York; or at the Office of the Federal Register, 800 North Capitol Street, NW., suite 700, Washington, DC.

FOR FURTHER INFORMATION CONTACT: Peter Cuneo, Senior Aerospace Engineer, Systems and Flight Test Branch, ANE–172, FAA, Engine and Propeller Directorate, New York Aircraft Certification Office, 10 Fifth Street, Third Floor, Valley Stream, New York 11581; telephone (516) 256–7506; fax (516) 568–2716.

SUPPLEMENTARY INFORMATION: A proposal to amend part 39 of the Federal Aviation Regulations (14 CFR part 39) by superseding AD 98–20–14, amendment 39–10781 (63 FR 50501, September 22, 1998), which is applicable to certain Bombardier Model DHC–8–102, –103, –106, –201, –202, –301, –311, and –315 series airplanes, was published in the **Federal Register** on August 12, 1999 (64 FR 43948). The action proposed to supersede AD 98–20–14 to continue to require a one-time inspection to detect chafing of electrical wires in the cable trough below the cabin floor; repair, if necessary; installation of additional tie-mounts and tie-wraps; and application of sealant to rivet heads. That action also proposed to expand the applicability of the existing AD to include additional airplanes.

Comments

Interested persons have been afforded an opportunity to participate in the making of this amendment. No comments were submitted in response to the proposal or the FAA's determination of the cost to the public.

Conclusion

The FAA has determined that air safety and the public interest require the adoption of the rule as proposed.

Cost Impact

There are approximately 231 Bombardier Model DHC–8–102, –103, –106, –201, –202, –301, –311, and –315 series airplanes of U.S. registry that will be affected by this AD.

The actions specified in this AD are currently required by AD 98–20–14, which is applicable to 210 Model DHC–8–102, –103, –106, –201, and –202 series airplanes. For these airplanes, it takes approximately 70 work hours per airplane to accomplish the required actions, at an average labor rate of $60 per work hour. Required parts are provided by the manufacturer at no cost to the operators. Based on these figures, the cost impact of the current requirements of AD 98–20–14 on U.S. operators of these airplanes is estimated to be $882,000, or $4,200 per airplane. The AD will add no new costs for these airplanes.

The actions specified in this AD are currently required by AD 98–20–14, which is applicable to 15 Model DHC–8–301, –311, and –315 series airplanes. For these airplanes, it takes approximately 100 work hours per airplane to accomplish the required actions, at an average labor rate of $60 per work hour. Required parts will be provided by the manufacturer at no cost to the operators. Based on these figures, the cost impact of the current requirements of AD 98–20–14 on U.S. operators of these airplanes is estimated to be $90,000, or $6,000 per airplane.

The actions specified in this AD will be applicable to 6 additional Model DHC–8–301, –311, and –315 series airplanes of U.S. registry and will take approximately 100 work hours per airplane to accomplish, at an average labor rate of $60 per work hour. Required parts will be provided by the manufacturer at no cost to the operator. Based on these figures, cost impact of the action required by this AD on U.S. operators of these 6 additional airplanes is estimated to be $36,000, or approximately $6,000 per airplane.

The cost impact figures discussed above are based on assumptions that no operator has yet accomplished any of the requirements of this AD action, and that no operator would accomplish those actions in the future if this AD were not adopted.

Regulatory Impact

The regulations adopted herein will not have substantial direct effects on the States, on the relationship between the national government and the States, or on the distribution of power and

responsibilities among the various levels of government. Therefore, in accordance with Executive Order 12612, it is determined that this final rule does not have sufficient federalism implications to warrant the preparation of a Federalism Assessment.

For the reasons discussed above, I certify that this action (1) Is not a ''significant regulatory action'' under Executive Order 12866; (2) is not a ''significant rule'' under DOT Regulatory Policies and Procedures (44 FR 11034, February 26, 1979); and (3) will not have a significant economic impact, positive or negative, on a substantial number of small entities under the criteria of the Regulatory Flexibility Act. A final evaluation has been prepared for this action and it is contained in the Rules Docket. A copy of it may be obtained from the Rules Docket at the location provided under the caption **ADDRESSES.**

List of Subjects in 14 CFR Part 39

Air transportation, Aircraft, Aviation safety, Incorporation by reference, Safety.

Adoption of the Amendment

Accordingly, pursuant to the authority delegated to me by the Administrator, the Federal Aviation Administration amends part 39 of the Federal Aviation Regulations (14 CFR part 39) as follows:

PART 39—AIRWORTHINESS DIRECTIVES

1. The authority citation for part 39 continues to read as follows:

Authority: 49 U.S.C. 106(g), 40113, 44701.

§ 39.13 [Amended]

2. Section 39.13 is amended by removing amendment 39–10781 (63 FR 50501, September 22, 1998), and by adding a new airworthiness directive (AD), amendment 39–11352, to read as follows:

99–21–09 Bombardier, Inc. (Formerly de Havilland, Inc.): Amendment 39–11352. Docket 98–NM–321–AD. Supersedes AD 98–20–14, Amendment 39–10781.

Applicability: Model DHC–8–102, –103, –106, –201, –202, –301, –311, and –315 series airplanes; serial numbers 3 through 540 inclusive, excluding serial number 462; certificated in any category.

Note 1: This AD applies to each airplane identified in the preceding applicability provision, regardless of whether it has been modified, altered, or repaired in the area subject to the requirements of this AD. For airplanes that have been modified, altered, or repaired so that the performance of the requirements of this AD is affected, the owner/operator must request approval for an alternative method of compliance in accordance with paragraph (b) of this AD. The request should include an assessment of the effect of the modification, alteration, or repair on the unsafe condition addressed by this AD; and, if the unsafe condition has not been eliminated, the request should include specific proposed actions to address it.

Compliance: Required as indicated, unless accomplished previously.

To prevent chafing of electrical wires, which could result in an uncommanded shutdown of an engine during flight, accomplish the following:

One-Time Inspection, Corrective Action, and Modification

(a) Perform a one-time general visual inspection to detect chafing of electrical wires in the cable trough below the cabin floor; install additional tie-mounts and tie-wraps; and apply sealant to rivet heads (reference Bombardier Modification 8/2705); in accordance with Bombardier Service Bulletin S.B. 8–53–66, dated March 27, 1998, at the time specified in paragraph (a)(1) or (a)(2) of this AD, as applicable. If any chafing is detected during the inspection required by this paragraph, prior to further flight, repair in accordance with the service bulletin.

Note 2: For the purposes of this AD, a general visual inspection is defined as: ''A visual examination of an interior or external area, installation, or assembly to detect obvious damage, failure, or irregularity. This level of inspection is made under normally available lighting conditions such as daylight, hangar lighting, flashlight, or drop-light, and may require removal or opening of access panels or doors. Stands, ladders, or platforms may be required to gain proximity to the area being checked.''

(1) For airplanes having serial numbers 3 through 519 inclusive, excluding serial number 462: Inspect within 36 months after October 27, 1998 (the effective date of AD 98–20–14, amendment 39–10781).

(2) For airplanes having serial numbers 520 through 540 inclusive: Inspect within 36 months after the effective date of this AD, or at the next ''C'' check, whichever occurs first.

Alternative Methods of Compliance

(b) An alternative method of compliance or adjustment of the compliance time that provides an acceptable level of safety may be used if approved by the Manager, New York Aircraft Certification Office (ACO), FAA, Engine and Propeller Directorate. Operators shall submit their requests through an appropriate FAA Principal Maintenance Inspector, who may add comments and then send it to the Manager, New York ACO.

Note 3: Information concerning the existence of approved alternative methods of compliance with this AD, if any, may be obtained from the New York ACO.

Special Flight Permits

(c) Special flight permits may be issued in accordance with sections 21.197 and 21.199 of the Federal Aviation Regulations (14 CFR 21.197 and 21.199) to operate the airplane to a location where the requirements of this AD can be accomplished.

Incorporation by Reference

(d) The actions shall be done in accordance with Bombardier Service Bulletin S.B. 8–53–66, dated March 27, 1998. This incorporation by reference was approved previously by the Director of the Federal Register as of October 27, 1998 (63 FR 50501, September 22, 1998). Copies may be obtained from Bombardier, Inc., Bombardier Regional Aircraft Division, Garratt Boulevard, Downsview, Ontario M3K 1Y5, Canada. Copies may be inspected at the FAA, Transport Airplane Directorate, 1601 Lind Avenue, SW., Renton, Washington; or at the FAA, Engine and Propeller Directorate New York Aircraft Certification Office, 10 Fifth Street, Third Floor, Valley Stream, New York; or at the Office of the Federal Register, 800 North Capitol Street, NW., suite 700, Washington, DC.

Note 4: The subject of this AD is addressed in Canadian airworthiness directive CF–98–08R1, dated September 16, 1998.

(e) This amendment becomes effective on November 10, 1999.

Issued in Renton, Washington, on September 28, 1999.

D.L. Riggin,

Acting Manager, Transport Airplane Directorate, Aircraft Certification Service.

[FR Doc. 99–25768 Filed 10–5–99; 8:45 am]

BILLING CODE 4910–13–P

DEPARTMENT OF TRANSPORTATION

Federal Aviation Administration

14 CFR Part 39

[Docket No. 99–SW–13–AD; Amendment 39–11358; AD 99–21–13]

RIN 2120–AA64

Airworthiness Directives; Eurocopter France Model AS332C, L, and L1 Helicopters

AGENCY: Federal Aviation Administration, DOT.

ACTION: Final rule.

SUMMARY: This amendment adopts a new airworthiness directive (AD), applicable to Eurocopter France Model AS332C, L, and L1 helicopters, that requires inspecting and replacing certain bolts that secure the hoist arm lower fitting. This amendment is prompted by a report of a failure of the bolts that secure the hoist arm lower fitting during a factory load test. The actions specified by this AD are intended to prevent failure of the bolts that secure the hoist arm lower fitting, separation of components from the helicopter, impact with the main or tail rotor, and subsequent loss of control of the helicopter.

EFFECTIVE DATE: November 10, 1999.

FOR FURTHER INFORMATION CONTACT: Shep Blackman, Aerospace Engineer,

FAA, Rotorcraft Directorate, Regulations Group, 2601 Meacham Blvd., Fort Worth, Texas 76137, telephone (817) 222–5296, fax (817) 222–5961.

SUPPLEMENTARY INFORMATION: A proposal to amend part 39 of the Federal Aviation Regulations (14 CFR part 39) to include an airworthiness directive (AD) that is applicable to Eurocopter France Model AS332C, L, and L1 helicopters was published in the **Federal Register** on July 7, 1999 (64 FR 36623). That action proposed to require inspecting and replacing certain bolts that secure the hoist arm lower fitting.

Interested persons have been afforded an opportunity to participate in the making of this amendment. No comments were received on the proposal or the FAA's determination of the cost to the public. The FAA has determined that air safety and the public interest require the adoption of the rule as proposed except for two nonsubstantive changes that have been made to paragraph (e) and Note 2 of the AD. In paragraph (e), the NPRM incorrectly states that alternative methods of compliance (AMOC) or adjustments of the compliance time may be approved by the ''Manager, Rotorcraft Certification Office, Rotorcraft Directorate.'' This is incorrect and has been changed to state that the Manager, Regulations Group, Rotorcraft Directorate, is responsible for approving any AMOC or adjustment of the compliance time. Note 2 of the NPRM states that information concerning the existence of approved AMOC may be obtained from the ''Rotorcraft Certification Office''; this is also incorrect and has been changed to state that information may be obtained from the ''Regulations Group.'' The FAA has determined that these changes will neither increase the economic burden on any operator nor increase the scope of the AD.

The FAA estimates that 4 helicopters of U.S. registry will be affected by this AD, that it will take approximately 1.5 work hours per helicopter to inspect and replace the bolts, and that the average labor rate is $60 per work hour. Required parts will cost approximately $50 for 4 bolts. Based on these figures, the total cost impact of the AD on U.S. operators is estimated to be $560.

The regulations adopted herein will not have substantial direct effects on the States, on the relationship between the national government and the States, or on the distribution of power and responsibilities among the various levels of government. Therefore, in accordance with Executive Order 12612, it is determined that this final rule does not have sufficient federalism implications to warrant the preparation of a Federalism Assessment.

For the reasons discussed above, I certify that this action (1) is not a ''significant regulatory action'' under Executive Order 12866; (2) is not a ''significant rule'' under DOT Regulatory Policies and Procedures (44 FR 11034, February 26, 1979); and (3) will not have a significant economic impact, positive or negative, on a substantial number of small entities under the criteria of the Regulatory Flexibility Act. A final evaluation has been prepared for this action and it is contained in the Rules Docket. A copy of it may be obtained from the Rules Docket at the FAA, Office of the Regional Counsel, Southwest Region, 2601 Meacham Blvd., Room 663, Fort Worth, Texas 76137.

List of Subjects in 14 CFR Part 39

Air transportation, Aircraft, Aviation safety, Safety.

Adoption of the Amendment

Accordingly, pursuant to the authority delegated to me by the Administrator, the Federal Aviation Administration amends part 39 of the Federal Aviation Regulations (14 CFR part 39) as follows:

PART 39—AIRWORTHINESS DIRECTIVES

1. The authority citation for part 39 continues to read as follows:

Authority: 49 U.S.C. 106(g), 40113, 44701.

§ 39.13 [Amended]

2. Section 39.13 is amended by adding a new airworthiness directive to read as follows:

AD 99–21–13 Eurocopter France: Amendment 39–11358. Docket No. 99–SW–13–AD.

Applicability: Model AS332C, L, and L1 helicopters, that are not modified in accordance with modification AMS 0722955, certificated in any category.

Note 1: This AD applies to each helicopter identified in the preceding applicability provision, regardless of whether it has been otherwise modified, altered, or repaired in the area subject to the requirements of this AD. For helicopters that have been modified, altered, or repaired so that the performance of the requirements of this AD is affected, the owner/operator must request approval for an alternative method of compliance in accordance with paragraph (e) of this AD. The request should include an assessment of the effect of the modification, alteration, or repair on the unsafe condition addressed by this AD; and, if the unsafe condition has not been eliminated, the request should include specific proposed actions to address it.

Compliance: Required prior to the next use of the hoist, unless accomplished previously.

To prevent failure of the bolts that secure the hoist arm lower fitting, separation of components from the helicopter, impact with the main or tail rotors, and subsequent loss of control of the helicopter, accomplish the following:

(a) Remove the four bolts that secure the hoist arm lower fitting.

(b) Inspect each bolt as follows:

(1) Measure each bolt shank from beneath the bolt head to the shank end;

(2) Determine the part number (P/N) of the bolt; and

(3) Determine what engraved marking is present on the bolt head.

(c) Each bolt, P/N 22201BE080020L, inspected in accordance with paragraph (b), measuring 20 mm in length and having ''BE'' engraved on the bolt head may be reinstalled if otherwise airworthy.

(d) Any bolt inspected in accordance with paragraph (b), not measuring 20 mm in length and having ''BC'' or letters other than ''BE'' engraved on the bolt head must be replaced. Replace with an airworthy bolt, P/N 22201BE080020L, that measures 20 mm in length and has ''BE'' engraved on the bolt head.

(e) An alternative method of compliance or adjustment of the compliance time that provides an acceptable level of safety may be used if approved by the Manager, Regulations Group, Rotorcraft Directorate, FAA. Operators shall submit their requests through an FAA Principal Maintenance Inspector, who may concur or comment and then send it to the Manager, Regulations Group.

Note 2: Information concerning the existence of approved alternative methods of compliance with this AD, if any, may be obtained from the Regulations Group.

(f) Special flight permits may be issued in accordance with sections 21.197 and 21.199 of the Federal Aviation Regulations (14 CFR 21.197 and 21.199) to operate the helicopter to a location where the requirements of this AD can be accomplished.

(g) This amendment becomes effective on November 10, 1999.

Note 3: The subject of this AD is addressed in Direction Generale De L'Aviation Civile (France) AD No. 98–487–072(A), dated December 2, 1998.

Issued in Fort Worth, Texas, on September 29, 1999.

Mark R. Schilling,

Acting Manager, Rotorcraft Directorate, Aircraft Certification Service.

[FR Doc. 99–25919 Filed 10–5–99; 8:45 am]

BILLING CODE 4910–13–U

DEPARTMENT OF TRANSPORTATION

Federal Aviation Administration

14 CFR Part 39

[Docket No. 99–NM–14–AD; Amendment 39–11354; AD 95–04–07 R2]

RIN 2120–AA64

Airworthiness Directives; McDonnell Douglas Model DC–10–10, –15, and –30 Airplanes, and KC–10A (Military) Airplanes

AGENCY: Federal Aviation Administration, DOT.

ACTION: Final rule.

SUMMARY: This amendment revises an existing airworthiness directive (AD), applicable to certain McDonnell Douglas Model DC–10–10, –15, and –30 airplanes, and KC–10A (military) airplanes, that currently requires inspections to determine the condition of the lockwires on the forward engine mount bolts and correction of any discrepancies found. That amendment also provides for termination of the inspections for some airplanes by installing retainers on the bolts. That AD was prompted by reports of stretched or broken lockwires on the forward engine mount bolts. The actions specified by that AD are intended to prevent broken lockwires, which could result in loosening of the engine mount bolts, and subsequent separation of the engine from the airplane. This amendment provides an additional optional terminating modification and clarification of the requirements of the previous optional terminating modification, and removes the reporting requirements for the repetitive inspections.

DATES: Effective November 10, 1999.

The incorporation by reference of certain publications, as listed in the regulations, was approved previously by the Director of the Federal Register as of March 17, 1995 (60 FR 38477, July 27, 1995).

ADDRESSES: The service information referenced in this AD may be obtained from The Boeing Company, Douglas Products Division, 3855 Lakewood Boulevard, Long Beach, California 90846, Attention: Technical Publications Business Administration, Dept. C1–L51 (2–60). This information may be examined at the Federal Aviation Administration (FAA), Transport Airplane Directorate, Rules Docket, 1601 Lind Avenue, SW., Renton, Washington; or at the FAA, Transport Airplane Directorate, Los Angeles Aircraft Certification Office, 3936 Paramount Boulevard, Lakewood, California; or at the Office of the Federal Register, 800 North Capitol Street, NW., suite 700, Washington, DC.

FOR FURTHER INFORMATION CONTACT: Ron Atmur, Aerospace Engineer, Airframe Branch, ANM–120L, FAA, Transport Airplane Directorate, Los Angeles Aircraft Certification Office, 3960 Paramount Boulevard, Lakewood, California 90712–4137; telephone (562) 627–5224; fax (562) 627–5210.

SUPPLEMENTARY INFORMATION: A proposal to amend part 39 of the Federal Aviation Regulations (14 CFR part 39) by revising AD 95–04–07 R1, amendment 39–9317 (60 FR 38477, July 27, 1995), which is applicable to certain McDonnell Douglas Model DC–10–10, –15, and –30 airplanes, and KC–10A (military) airplanes, was published in the **Federal Register** on July 21, 1999 (64 FR 39104). The action proposed to revise AD 95–04–07 R1 to continue to require inspections to determine the condition of the lockwires on the forward engine mount bolts and correction of any discrepancies found. The action also proposed to continue to provide for termination of the inspections for some airplanes by installing retainers on the bolts. In addition, the action proposed to provide an additional optional terminating modification and clarification of the requirements of the previous optional terminating modification, and proposed to remove the reporting requirements for the repetitive inspections.

Comments

Interested persons have been afforded an opportunity to participate in the making of this amendment. No comments were submitted in response to the proposal or the FAA's determination of the cost to the public.

Conclusion

The FAA has determined that air safety and the public interest require the adoption of the rule as proposed.

Cost Impact

There are approximately 389 airplanes of the affected design in the worldwide fleet. The FAA estimates that 229 airplanes of U.S. registry will be affected by this AD.

The inspections that are currently required by AD 95–04–07 R1, and retained in this AD, will take approximately 2 work hours per airplane to accomplish, at an average labor rate of $60 per hour. Based on these figures, the cost impact of the currently required inspections on U.S. operators is estimated to be approximately $27,480, or $120 per airplane, per inspection cycle.

The cost impact figure discussed above is based on assumptions that no operator has yet accomplished any of the requirements of this AD action, and that no operator would accomplish those actions in the future if this AD were not adopted.

Should an operator elect to accomplish the optional terminating modification, as specified in AD 95–04–07 R1, and the requirements clarified in this AD, it will take approximately 4 work hours per airplane to accomplish, at an average labor rate of $60 per hour. Required parts will cost between $2,744 and $2,822 per airplane. Based on these figures, the cost impact of the optional terminating modification specified by AD 95–04–07 R1 on U.S. operators is estimated to be between $2,984 and $3,062 per airplane.

Should an operator elect to accomplish the optional terminating modification specified in McDonnell Douglas Service Bulletin DC10–71–159 that will be provided by this AD, it will take approximately 16 work hours per airplane to accomplish this required action, at an average labor rate of $60 per work hour. Required parts will cost between $2,744 and $2,822 per airplane. Based on these figures, the cost impact of the optional terminating modification provided for by this AD on U.S. operators is estimated to be between $3,704 and $3,782 per airplane.

Regulatory Impact

The regulations adopted herein will not have substantial direct effects on the States, on the relationship between the national government and the States, or on the distribution of power and responsibilities among the various levels of government. Therefore, in accordance with Executive Order 12612, it is determined that this final rule does not have sufficient federalism implications to warrant the preparation of a Federalism Assessment.

For the reasons discussed above, I certify that this action (1) Is not a ''significant regulatory action'' under Executive Order 12866; (2) is not a ''significant rule'' under DOT Regulatory Policies and Procedures (44 FR 11034, February 26, 1979); and (3) will not have a significant economic impact, positive or negative, on a substantial number of small entities under the criteria of the Regulatory Flexibility Act. A final evaluation has been prepared for this action and it is contained in the Rules Docket. A copy of it may be obtained from the Rules Docket at the location provided under the caption **ADDRESSES**.

List of Subjects in 14 CFR Part 39

Air transportation, Aircraft, Aviation safety, Incorporation by reference, Safety.

Adoption of the Amendment

Accordingly, pursuant to the authority delegated to me by the Administrator, the Federal Aviation Administration amends part 39 of the Federal Aviation Regulations (14 CFR part 39) as follows:

PART 39—AIRWORTHINESS DIRECTIVES

1. The authority citation for part 39 continues to read as follows:

Authority: 49 U.S.C. 106(g), 40113, 44701.

§ 39.13 [Amended]

2. Section 39.13 is amended by revising amendment 39–9317 (60 FR 38477, July 27, 1995), and by adding a new airworthiness directive (AD), amendment 39–11354, to read as follows:

95–04–07 R2 McDonnell Douglas: Amendment 39–11354. Docket 99–NM–14–AD. Revises AD 95–04–07 R1, Amendment 39–9317.

Applicability: Model DC–10–30 and KC–10A (military) airplanes on which bolt retainers have not been installed on the engine mount in accordance with McDonnell Douglas DC–10 Service Bulletin 71–133, Revision 6, dated June 30, 1992; and all Model DC–10–10 and –15 airplanes; certificated in any category.

Note 1: This AD applies to each airplane identified in the preceding applicability provision, regardless of whether it has been modified, altered, or repaired in the area subject to the requirements of this AD. For airplanes that have been modified, altered, or repaired so that the performance of the requirements of this AD is affected, the owner/operator must request approval for an alternative method of compliance in accordance with paragraph (d) of this AD. The request should include an assessment of the effect of the modification, alteration, or repair on the unsafe condition addressed by this AD; and, if the unsafe condition has not been eliminated, the request should include specific proposed actions to address it.

Compliance: Required as indicated, unless accomplished previously.

To prevent broken lockwires, which could result in loosening of the engine mount bolts, and subsequent separation of the engine from the airplane, accomplish the following:

Restatement of Requirements of AD 95–04–07 R1, Amendment 39–9317

(a) Within 120 days after March 17, 1995 (the effective date of AD 95–04–07 R1, amendment 39–9317), unless accomplished previously within the last 750 flight hours prior to March 17, 1995, perform a visual inspection to detect broken lockwires on the forward engine mount bolts on engines 1, 2, and 3, in accordance with McDonnell Douglas Alert Service Bulletin DC10–71A159, Revision 1, dated January 31, 1995.

(1) If no lockwire is found broken, repeat the inspection thereafter at intervals not to exceed 750 flight hours.

(2) If any lockwire is found broken, prior to further flight: Check the torque of the bolt, install a new lockwire, and install a torque stripe on the bolt, in accordance with the alert service bulletin. Thereafter at intervals not to exceed 750 flight hours, perform a visual inspection to detect misalignment of the torque stripes, and repeat the inspection to detect broken lockwires, in accordance with the alert service bulletin.

Optional Terminating Actions

(b) For Model DC–10–30 airplanes and KC–10A (military) airplanes only: Installation of retainers on the engine mount bolts of engines 1, 2, or 3 in accordance with the procedures depicted in Figure 6 of Revision 6 of McDonnell Douglas DC–10 Service Bulletin 71–133, dated June 30, 1992, constitutes terminating action for the requirements of this AD for that engine.

(c) For Model DC–10–10, –15, and –30 airplanes and KC–10A (military) airplanes: Modification of the forward engine mount bolts for engine 1, 2, or 3 in accordance with McDonnell Douglas Service Bulletin DC10–71–159, dated September 6, 1995, or Revision 01, dated July 28, 1997, constitutes terminating action for the requirements of this AD for that engine.

Alternative Methods of Compliance

(d) An alternative method of compliance or adjustment of the compliance time that provides an acceptable level of safety may be used if approved by the Manager, Los Angeles Aircraft Certification Office (ACO), FAA, Transport Airplane Directorate. Operators shall submit their requests through an appropriate FAA Principal Maintenance Inspector, who may add comments and then send it to the Manager, Los Angeles ACO.

Note 2: Information concerning the existence of approved alternative methods of compliance with this AD, if any, may be obtained from the Los Angeles ACO.

Special Flight Permits

(e) Special flight permits may be issued in accordance with sections 21.197 and 21.199 of the Federal Aviation Regulations (14 CFR 21.197 and 21.199) to operate the airplane to a location where the requirements of this AD can be accomplished.

Incorporation by Reference

(f) Except as provided by paragraphs (b) and (c) of this AD, the actions shall be done in accordance with McDonnell Douglas Alert Service Bulletin DC10–71A159, Revision 1, dated January 31, 1995. This incorporation by reference was approved previously by the Director of the Federal Register as of March 17, 1995 (60 FR 38477, July 27, 1995). Copies may be obtained from The Boeing Company, Douglas Products Division, 3855 Lakewood Boulevard, Long Beach, California 90846, Attention: Technical Publications Business Administration, Dept. C1–L51 (2–60). Copies may be inspected at the FAA, Transport Airplane Directorate, 1601 Lind Avenue, SW., Renton, Washington; or at the FAA, Transport Airplane Directorate, Los Angeles Aircraft Certification Office, 3936 Paramount Boulevard, Lakewood, California; or at the Office of the Federal Register, 800 North Capitol Street, NW., suite 700, Washington, DC.

(g) This amendment becomes effective on November 10, 1999.

Issued in Renton, Washington, on September 29, 1999.

D.L. Riggin,

Acting Manager, Transport Airplane Directorate, Aircraft Certification Service.

[FR Doc. 99–25932 Filed 10–5–99; 8:45 am]

BILLING CODE 4910–13–U

DEPARTMENT OF TRANSPORTATION

Federal Aviation Administration

14 CFR Part 71

[Airspace Docket No. 99–ACE–32]

Amendment to Class E Airspace; Smith Center, KS

AGENCY: Federal Aviation Administration, DOT.

ACTION: Direct final rule; confirmation of effective date.

SUMMARY: This document confirms the effective date of a direct final rule which revises Class E airspace at Smith Center, KS.

DATES: The direct final rule published at 64 FR 43068 is effective on 0901 UTC, November 4, 1999.

FOR FURTHER INFORMATION CONTACT: Kathy Randolph, Air Traffic Division, Airspace Branch, ACE–520C, Federal Aviation Administration, 601 East 12th Street, Kansas City, Missouri 64106; telephone: (816) 426–3408.

SUPPLEMENTARY INFORMATION: The FAA published this direct final rule with a request for comments in the **Federal Register** on August 9, 1999 (64 FR 43068). The FAA uses the direct final rulemaking procedure for a non-controversial rule where the FAA believes that there will be no adverse public comment. This direct final rule advised the public that no adverse comments were anticipated, and that unless a written adverse comment, or a written notice of intent to submit such an adverse comment, were received within the comment period, the regulation would become effective on November 4, 1999. No adverse comments were received, and thus this notice confirms that this direct final rule will become effective on that date.

Issued in Kansas City, MO on September 28, 1999.

Richard L. Day,

Acting Manager, Air Traffic Division, Central Region.

[FR Doc. 99–26055 Filed 10–5–99; 8:45 am]

BILLING CODE 4910–13–M

DEPARTMENT OF TRANSPORTATION

Federal Aviation Administration

14 CFR Part 71

[Airspace Docket No. 99–ACE–29]

Amendment to Class E Airspace; Wayne, NE

AGENCY: Federal Aviation Administration, DOT.

ACTION: Direct final rule; confirmation of effective date.

SUMMARY: This document confirms the effective date of a direct final rule which revises Class E airspace at Wayne, NE.

DATES: The direct final rule published at 64 FR 43065 is effective on 0901 UTC, November 4, 1999.

FOR FURTHER INFORMATION CONTACT: Kathy Randolph, Air Traffic Division, Airspace Branch, ACE–520C, Federal aviation Administration, 601 East 12th Street, Kansas City, Missouri 64106; telephone: (816) 426–3408.

SUPPLEMENTARY INFORMATION: The FAA published this direct final rule with a request for comments in the **Federal Register** on August 9, 1999 (64 FR 43065). The FAA uses the direct final rulemaking procedure for a non-controversial rule where the FAA believes that there will be no adverse public comment. This direct final rule advised the public that no adverse comments were anticipated, and that unless a written adverse comment, or a written notice of intent to submit such an adverse comment, were received within the comment period, the regulation would become effective on November 4, 1999. No adverse comments were received, and thus this notice confirms that this direct final rule will become effective on that date.

Issued in Kansas City, MO on September 28, 1999.

Richard L. Day,

Acting Manager, Air Traffic Division, Central Region.

[FR Doc. 99–26054 Filed 10–5–99; 8:45 am]

BILLING CODE 4910–13–M

DEPARTMENT OF TRANSPORTATION

Federal Aviation Administration

14 CFR Part 71

[Airspace Docket No. 99–ACE–31]

Amendment to Class E Airspace; Jefferson, IA

AGENCY: Federal Aviation Administration, DOT.

ACTION: Direct final rule; confirmation of effective date.

SUMMARY: This document confirms the effective date of a direct final rule which revises Class E airspace at Jefferson, IA.

DATES: The direct final rule published at 64 FR 43066 is effective on 0901 UTC, November 4, 1999.

FOR FURTHER INFORMATION CONTACT: Kathy Randolph, Air Traffic Division, Airspace Branch, ACE–520C, Federal Aviation Administration, 601 East 12th Street, Kansas City, Missouri 64106; telephone: (816) 426–3408.

SUPPLEMENTARY INFORMATION: The FAA published this direct final rule with a request for comments in the **Federal Register** on August 9, 1999 (64 FR 43066). The FAA uses the direct final rulemaking procedure for a non-controversial rule where the FAA believes that there will be no adverse public comment. This direct final rule advised the public that no adverse comments were anticipated, and that unless a written adverse comment, or a written notice of intent to submit such an adverse comment, were received within the comment period, the regulation would become effective on November 4, 1999. No adverse comments were received, and thus this notice confirms that this direct final rule will become effective on that date.

Issued in Kansas City, MO on September 28, 1999.

Richard L. Day,

Acting Manager, Air Traffic Division, Central Region.

[FR Doc. 99–26053 Filed 10–5–99; 8:45 am]

BILLING CODE 4910–13–M

DEPARTMENT OF TRANSPORTATION

Federal Aviation Administration

14 CFR Part 71

[Airspace Docket No. 99–ACE–27]

Amendment to Class E Airspace; Hebron, NE

AGENCY: Federal Aviation Administration, DOT.

ACTION: Direct final rule; confirmation of effective date.

SUMMARY: This document confirms the effective date of a direct final rule which revises Class E airspace at Hebron, NE.

DATES: The direct final rule published at 64 FR 43063 is effective on 0901 UTC, November 4, 1999.

FOR FURTHER INFORMATION CONTACT: Kathy Randolph, Air Traffic Division, Airspace Branch, ACE–520C, Federal Aviation Administration, 601 East 12th Street, Kansas City, Missouri 64106; telephone: (816) 426–3408.

SUPPLEMENTARY INFORMATION: The FAA published this direct final rule with a request for comments in the **Federal Register** on August 9, 1999 (64 FR 43063). The FAA uses the direct final rulemaking procedure for a non-controversial rule where the FAA believes that there will be no adverse public comment. This direct final rule advised the public that no adverse comments were anticipated, and that unless a written adverse comment, or a written notice of intent to submit such an adverse comment, were received within the comment period, the regulation would become effective on November 4, 1999. No adverse comments were received, and thus this notice confirms that this direct final rule will become effective on that date.

Issued in Kansas, City, MO on September 28, 1999.

Richard L. Day,

Acting Manager, Air Traffic Division, Central Region.

[FR Doc. 99–26052 Filed 10–5–99; 8:45 am]

BILLING CODE 4910–13–M

DEPARTMENT OF TRANSPORTATION

Federal Aviation Administration

14 CFR Part 71

[Airspace Docket No. 99–ASW–17]

Revision of Class E Airspace; Antlers, OK

AGENCY: Federal Aviation Administration (FAA), DOT.

ACTION: Direct final rule; confirmation of effective date.

SUMMARY: This notice confirms the effective date of a direct final rule which revises Class E airspace at Antlers, OK.

EFFECTIVE DATE: The direct final rule published at 64 FR 42591 is effective 0901 UTC, November 4, 1999.

FOR FURTHER INFORMATION CONTACT: Donald J. Day, Airspace Branch, Air Traffic Division, Southwest Region,

Federal Aviation Administration, Fort Worth, TX 76193–0520, telephone: 817–222–5793.

SUPPLEMENTARY INFORMATION: The FAA published this direct final rule with a request for comments in the **Federal Register** on August 5, 1999, (64 FR 42591). The FAA uses the direct final rulemaking procedure for a noncontroversial rule where the FAA believes that there will be no adverse public comment. This direct final rule advised the public that no adverse comments were anticipated, and that unless a written adverse comment, or a written notice of intent to submit such an adverse comment, were received within the comment period, the regulation would become effective on November 4, 1999. No adverse comments were received, and, thus, this action confirms that this direct final rule will be effective on that date.

Issued in Forth Worth, TX, on September 27, 1999.

Robert N. Stevens,

Acting Manager, Air Traffic Division, Southwest Region.

[FR Doc. 99–26051 Filed 10–5–99; 8:45 am]

BILLING CODE 4910–13–M

DEPARTMENT OF TRANSPORTATION

Federal Aviation Administration

14 CFR Part 71

[Airspace Docket No. 99–ASW–12]

Establishment of Class E Airspace; Rockport, TX

AGENCY: Federal Aviation Administration (FAA), DOT.

ACTION: Final rule.

SUMMARY: This action establishes Class E airspace extending upward from the surface within a 4.1-mile radius of the Aransas County Airport, Rockport, TX. This action is prompted by a determination that Aransas County Airport meets all the requirements and has a need for controlled airspace for aircraft executing the standard instrument approach procedures (SIAP's) at Aransas County Airport. The intended effect of this rule is to provide adequate controlled airspace for aircraft operating in the vicinity of Aransas County Airport, Rockport, TX.

EFFECTIVE DATE: 0901 UTC, November 4, 1999.

FOR FURTHER INFORMATION CONTACT: Donald J. Day, Airspace Branch, Air Traffic Division, Southwest Region, Federal Aviation Administration, Fort Worth, TX 76193–0520, telephone 817–222–5593.

SUPPLEMENTARY INFORMATION:

History

On July 19, 1999, a proposal to amend 14 CFR part 71 to establish Class E Airspace at Rockport, TX, was published in the **Federal Register** (64 FR 38609). The proposal was to establish Class E airspace extending upward from the surface within a 4.1-mile radius of Aransas County Airport, Rockport, TX. This action is prompted by an Aransas County request and subsequent FAA determination that Aransas County Airport meets all the requirements and has a need for controlled airspace for aircraft executing the SIAP's at Aransas County Airport. The intended effect of this rule is to provide adequate controlled airspace for aircraft operating in the vicinity of Aransas County Airport, Rockport, TX.

Interested parties were invited to participate in this rulemaking proceeding by submitting written comments on the proposal to the FAA. No comments to the proposal were received. The rule is adopted as proposed.

The coordinates for this airspace docket are based on North American Datum 83. Designated Class E airspace areas are published in Paragraph 5000 of FAA Order 7400.9G dated September 1, 1999, and effective September 16, 1999, which is incorporated by reference in 14 CFR 71.1. The Class E airspace designations listed in this document will be published subsequently in the order.

The Rule

This amendment to 14 CFR Part 71 establishes Class E airspace, at Rockport, TX, extending upward from the surface within a 4.1-mile radius of the Aransas County Airport, Rockport, TX.

The FAA has determined that this regulation only involves an established body of technical regulations that require frequent and routine amendments to keep them operationally current. If therefore (1) is not a ''significant regulatory action'' under Executive Order 12866; (2) is not a ''significant rule'' under DOT Regulatory Policies and Procedures (44 FR 11034; February 26, 1979); and (3) does not warrant preparation of a regulatory evaluation as the anticipated impact is so minimal. Since this is a routine matter that will only affect air traffic procedures and air navigation, it is certified that this rule will not have a significant economic impact on a substantial number of small entities under the criteria of the Regulatory Flexibility Act.

List of Subjects in 14 CFR Part 71

Airspace, Incorporation by reference, Navigation (air). Adoption of the Amendment.

In consideration of the foregoing, the Federal Aviation Administration amends 14 CFR Part 71 as follows:

PART 71—DESIGNATION OF CLASS A, CLASS B, CLASS C, CLASS D, AND CLASS E AIRSPACE AREAS; AIRWAYS; ROUTES; AND REPORTING POINTS

1. The authority citation for 14 CFR Part 71 continues to reas as follows:

Authority: 49 U.S.C. 106(g), 40103, 40113, 40120; E.O. 10854; 24 FR 9565, 3 CFR, 1959–1963 Comp., p. 389.

§ 71.1 [Amended]

2. The incorporation by reference in 14 CFR 71.1 of the Federal Aviation Administration Order 7400.9G Airspace Designations and Reporting Points, dated September 1, 1999, and effective September 16, 1999, is amended as follows:

Paragraph 6002 Class E airspace areas extending upward from the surface of the earth.

* * * * *

ASW TX E2 Rockport, TX [Established]

Rockport, Aransas County Airport, TX,
(Lat. 28°05′12″ N., long. 97°02′41″ W.)

That airspace extending upward from the surface within a 4.1-mile radius of Aransas County Airport, Rockport, TX.

* * * * *

Issued in Fort Worth, TX on September 27, 1999.

Robert N. Stevens,

Acting Manager, Air Traffic Division, Southwest Region.

[FR Doc. 99–26050 Filed 10–5–99; 8:45 am]

BILLING CODE 4910–13–M

DEPARTMENT OF TRANSPORTATION

Federal Aviation Administration

14 CFR Part 71

[Airspace Docket No. 99–ASW–16]

Revision of Class E Airspace; Altus, OK

AGENCY: Federal Aviation Administration (FAA) DOT.

ACTION: Direct final rule; confirmation of effective date.

SUMMARY: This document confirms the effective date of a direct final rule which revises Class E airspace at Altus, OK.

EFFECTIVE DATE: The direct final rule published at 64 FR 42592 is effective 0901 UTC, November 4, 1999.

FOR FURTHER INFORMATION CONTACT: Donald J. Day, Airspace Branch, Air Traffic Division, Southwest Region, Federal Aviation Administration, Fort Worth, TX 76193–0520, telephone: 817–222–5793.

SUPPLEMENTARY INFORMATION: The FAA published this direct final rule with a request for comments in the **Federal Register** on August 5, 1999, (64 FR 42592). The FAA uses the direct final rulemaking procedure for a noncontroversial rule where the FAA believes that there will be no adverse public comment. This direct final rule advised the public that no adverse comments were anticipated, and that unless a written adverse comment, or a written notice of intent to submit such an adverse comment, were received within the comment period, the regulation would become effective on November 4, 1999. No adverse comments were received, and, thus, this action confirms that this direct final rule will be effective on that date.

Issued in Fort Worth, TX, on September 27, 1999.

Robert N. Stevens,

Acting Manager, Air Traffic Division, Southwest Region.

[FR Doc. 99–26049 Filed 10–5–99; 8:45 am]

BILLING CODE 4910–13–M

DEPARTMENT OF TRANSPORTATION

Federal Aviation Administration

14 CFR Part 71

[Airspace Docket No. 99–AGL–43]

Modification of Class E Airspace; Madison, WI

AGENCY: Federal Aviation Administration (FAA), DOT.

ACTION: Final rule.

SUMMARY: This action modifies Class E airspace at Madison, WI. A Global Positioning System (GPS) Standard Instrument Approach Procedure (SIAP) to Runway (Rwy) 21, and a VHF Omnidirectional Range (VOR) SIAP to Rwy 21, have been developed for Dane County Regional Airport-Truax Field. Controlled airspace extending upward from 700 to 1200 feet above ground level (AGL) is needed to contain aircraft executing the approaches. This action increases the radius of the existing controlled airspace for this airport.

EFFECTIVE DATE: 0901 UTC, December 30, 1999.

FOR FURTHER INFORMATION CONTACT: Denis C. Burke, Air Traffic Division, Airspace Branch, AGL–520, Federal Aviation Administration, 2300 East Devon Avenue, Des Plaines, Illinois 60018, telephone (847) 294–7568.

SUPPLEMENTARY INFORMATION:

History

On Friday, July 23, 1999, the FAA proposed to amend 14 CFR part 71 to modify Class E airspace at Madison, WI (64 FR 39949). The proposal was to add controlled airspace extending upward from 700 to 1200 feet AGL to contain Instrument Flight Rules (IFR) operations in controlled airspace during portions of the terminal operation and while transiting between the enroute and terminal environments.

Interested parties were invited to participate in this rulemaking proceeding by submitting written comments on the proposal to the FAA. One comment strongly supporting the proposal was received from the Wisconsin Department of Transportation. Class E airspace designations for airspace areas extending upward from 700 feet or more above the surface of the earth are published in paragraph 6005 of FAA Order 7400.9G dated September 1, 1999, and effective September 16, 1999, which is incorporated by reference in 14 CFR 71.1. The Class E airspace designation listed in this document will be published subsequently in the Order.

The Rule

This amendment to 14 CFR part 71 modifies Class E airspace at Madison, WI, to accommodate aircraft executing the proposed GPS Rwy 21 SIAP and VOR Rwy 21 SIAP at Dane County Regional Airport-Truax Field by modifying the existing controlled airspace. The area will be depicted on appropriate aeronautical charts.

The FAA has determined that this regulation only involves an established body of technical regulations for which frequent and routine amendments are necessary to keep them operationally current. Therefore, this regulation—(1) is not a ''significant regulatory action'' under Executive Order 12866; (2) is not a ''significant rule'' under DOT Regulatory Policies and Procedures (44 FR 11034; February 26, 1979); and (3) does not warrant preparation of a Regulatory Evaluation as the anticipated impact is so minimal. Since this is a routine matter that will only affect air traffic procedures and air navigation, it is certified that this rule will not have a significant economic impact on a substantial number of small entities under the criteria of the Regulatory Flexibility Act.

List of Subjects in 14 CFR part 71

Airspace, Incorporation by reference, Navigation (air).

Adoption of the Amendment

In consideration of the foregoing, the Federal Aviation Administration amends 14 CFR part 71 as follows:

PART 71—DESIGNATION OF CLASS A, CLASS B, CLASS C, CLASS D, AND CLASS E AIRSPACE AREAS; AIRWAYS; ROUTES; AND REPORTING POINTS

1. The authority citation for part 71 continues to read as follows:

Authority: 49 U.S.C. 106(g), 40103, 40113, 40120; E.O. 10854, 24 FR 95665, 3 CFR, 1959–1963 Comp., p. 389.

§ 71.1 [Amended]

2. The incorporation by reference in 14 CFR 71.1 of the Federal Aviation Administration Order 7400.9G, Airspace Designations and Reporting Points, dated September 1, 1999, and effective September 16, 1999, is amended as follows:

* * * * *

Paragraph 6005 Class E airspace areas extending upward from 700 feet or more above the surface of the earth.

* * * * *

AGL WI E5 Madison, WI [Revised]

Madison, Dane County Regional Airport-Truax Field, WI
(Lat. 43°08′23″ N., long. 89°20′15″ W.)
Middleton, Morey Airport, WI
(Lat. 43°06′51″ N., long. 89°31′51″ W.)
That airspace extending upward from 700 feet above the surface within an 8.8-mile radius of Dane County Regional Airport-Truax Field and within 2.6 miles either side of the 188° bearing from the airport extending from the 8.8-mile radius to 13.9 miles south of the airport, and within a 6.3-mile radius of Morey Airport.

* * * * *

Issued in Des Plaines, Illinois on September 22, 1999.

Christopher R. Blum,

Manager, Air Traffic Division.

[FR Doc. 99–26048 Filed 10–5–99; 8:45 am]

BILLING CODE 4910–13–M

DEPARTMENT OF VETERANS AFFAIRS

38 CFR Part 3

RIN 2900–AJ61

Returned and Canceled Checks

AGENCY: Department of Veterans Affairs.

ACTION: Final rule.

SUMMARY: This document amends the Department of Veterans Affairs (VA) adjudication regulations governing payment of the proceeds of checks which are returned and canceled following the death of the payee. This amendment is necessary to implement a statutory amendment that deleted the requirement for settlement by the General Accounting Office prior to payment of these proceeds to an estate. This document also makes nonsubstantive changes for purposes of clarity.

DATES: *Effective Date:* October 19, 1996.

FOR FURTHER INFORMATION CONTACT: Warren Jones, Consultant, Regulations Staff, Compensation and Pension Service, Veterans Benefits Administration, 810 Vermont Avenue, NW, Washington, DC 20420, telephone (202) 273–7167.

SUPPLEMENTARY INFORMATION: Section 5122 of title 38, United States Code, governs payment of the proceeds of VA benefit check(s) received by a payee but not negotiated before his or her death. VA has implemented section 5122 at 38 CFR 3.1003.

Under section 5122, VA shall upon return and cancellation of an original benefit check pay the amount represented by the check in the same manner as it pays accrued benefits under 38 U.S.C. 5121. Section 5121 requires VA to pay accrued benefits to the first living person(s) in the following order: (A) veteran's spouse; (B) veteran's children (in equal shares); and (C) veteran's dependent parents (in equal shares). Section 5121(a)(5) also provides that, ''[i]n all other cases,'' accrued benefits may be paid only as necessary to reimburse the person who bore the expenses of the payee's last sickness and burial. Section 5122 further provides that any amount not paid in this manner shall be paid to the estate of the deceased payee, unless the estate will escheat, i.e., revert to the state because there is no one eligible to inherit it.

Prior to October 19, 1996, section 5122 required settlement by the General Accounting Office (GAO) before payment could be made to an estate. However, section 202(t) of the General Accounting Office Act of 1996, Public Law 104–316, effective October 19, 1996, amended section 5122 to delete reference to settlement by GAO. VA's Office of the General Counsel has advised that under section 5122, VA is now authorized to pay amounts due to the estates of deceased payees without reference to any other agency. We are, therefore, amending 38 CFR 3.1003(b) to bring VA's regulation into conformity with the amended statute by removing reference to settlement by GAO.

We also are amending § 3.1003(b) to replace the legal term ''escheat'' with the words ''revert to the state because there is no one eligible to inherit it.'' We believe that many will not understand the term ''escheat'' and have, therefore, chosen to replace it with words that express the same legal meaning but are easier for the general public to understand.

The effective date of this amendment is October 19, 1996, the effective date of section 202(t) of Public Law 104–316.

This final rule reflects statutory amendments and makes nonsubstantive changes. Accordingly, there is a basis for dispensing with prior notice and comment and delayed effective date provisions of 5 U.S.C. 552 and 553.

Because no notice of proposed rule making was required in connection with the adoption of this final rule, no regulatory flexibility analysis is required under the Regulatory Flexibility Act (5 U.S.C. 601–612). Even so, the Secretary hereby certifies that this final rule will not have a significant economic impact on a substantial number of small entities as they are defined in the Regulatory Flexibility Act.

The Catalog of Federal Domestic Assistance program numbers are 64.102, 64.104, 64.105, 64.109, and 64.110.

List of Subjects in 38 CFR Part 3

Administrative practice and procedure, Claims, Disability benefits, Health care, Pensions, Veterans, Vietnam.

Approved: September 14, 1999.

Togo D. West, Jr.,

Secretary of Veterans Affairs.

For the reasons set forth in the preamble, 38 CFR part 3 is amended as follows:

PART 3—ADJUDICATION

Subpart A—Pension, Compensation, and Dependency and Indemnity Compensation

1. The authority citation for part 3, subpart A continues to read as follows:

Authority: 38 U.S.C. 501(a), unless otherwise noted.

§ 3.1003 [Amended]

2. In § 3.1003, paragraph (b) is amended by removing ''upon settlement by the General Accounting Office''; and by removing ''escheat'' and adding, in its place, ''revert to the state because there is no one eligible to inherit it''.

[FR Doc. 99–26066 Filed 10–5–99; 8:45 am]

BILLING CODE 8320–01–P

DEPARTMENT OF VETERANS AFFAIRS

38 CFR Part 17

RIN 2900–AJI8

Enrollment—Provision of Hospital and Outpatient Care to Veterans

AGENCY: Department of Veterans Affairs.

ACTION: Final rule.

SUMMARY: This document amends VA's medical regulations. The Veterans' Health Care Eligibility Reform Act of 1996 mandates that VA implement a national enrollment system to manage the delivery of healthcare services. Accordingly, the medical regulations are amended to establish provisions consistent with this mandate. Starting October 1, 1998, most veterans were required to be enrolled in the VA healthcare system as a condition of receiving VA hospital and outpatient care. Veterans will be allowed to apply to be enrolled at any time. They will be eligible to be enrolled based on funding availability and their priority status. In accordance with statutory provisions, the final rule also states that some categories of veterans are eligible for VA hospital and outpatient care even if not enrolled. This document further establishes a ''medical benefits package'' setting forth, with certain exceptions, the hospital and outpatient care that will be provided to enrolled veterans and certain other veterans.

Moreover, this document announces that VA will enroll all 7 priority categories of veterans for the period October 1, 1999 through September 30, 2000, unless it is necessary to change this determination by a subsequent rulemaking document.

DATES: *Effective Date:* November 5, 1999.

FOR FURTHER INFORMATION CONTACT: Roscoe Butler, Health Administration Service, (10C3), Veterans Health Administration, Department of Veterans Affairs, 810 Vermont Avenue, NW, Washington, DC 20420, (202) 273–8302. (This is not a toll-free number.)

SUPPLEMENTARY INFORMATION: In a document published in the **Federal Register** on July 10, 1998 (63 FR 37299), we proposed to amend the medical regulations at 38 CFR part 17. Public Law 104–262, the Veterans' Health Care Eligibility Reform Act of 1996, mandates that VA implement a national enrollment system to manage the delivery of healthcare services. Public Law 104–262 also contains priority categories for determining eligibility for enrollment. Accordingly, we proposed

to amend the medical regulations to establish provisions consistent with these statutory provisions. Starting October 1, 1998, most veterans were required to be enrolled in the VA healthcare system as a condition for receiving VA hospital and outpatient care. The proposal also stated that these veterans would be allowed to apply to be enrolled at any time. In accordance with statutory provisions, the proposal further stated that some categories of veterans would be eligible for VA hospital and outpatient care even if not enrolled. In addition, we proposed to establish a ''medical benefits package'' setting forth, with certain exceptions, the hospital and outpatient care that would be provided to enrolled veterans and certain other veterans.

We received comments from 10 sources. The comments are discussed below. Based on the rationale set forth in the proposed rule and in this document, the provisions of the proposed rule are adopted as a final rule with certain changes explained below.

Catastrophically Disabled

The priority listing for enrollment in proposed § 17.36 provided for certain catastrophically disabled veterans to be enrolled in priority category 4 and for certain other catastrophically disabled veterans to be enrolled in priority category 7. The proposed provisions were based on an attempt to reconcile the provisions of 38 U.S.C. 1705 and 1710(a). The provisions of 38 U.S.C. 1705 include in priority category 4 ''veterans who are catastrophically disabled.'' The provisions of 38 U.S.C. 1710(a) set forth a preference scheme for providing VA care first to ''mandatory veterans'' and then to ''discretionary veterans.'' This preference scheme, if controlling, would place some catastrophically disabled veterans in a lower priority category than priority category 4. Several commenters asserted that the provisions of 38 U.S.C. 1705 must be interpreted to require that all catastrophically disabled veterans be enrolled in priority category 4. Upon further consideration, we have concluded that the statutory provisions in question are irreconcilable and that the rules of statutory construction require that deference be given to the more specific provisions in 38 U.S.C. 1705. Accordingly, except as discussed below, the final rule includes all catastrophically disabled veterans in priority category 4.

Some veterans who are catastrophically disabled must agree to make the applicable co-payment as a condition of being included in priority category 4. This is because 38 U.S.C. 1710 imposes co-payments on certain veterans, including some veterans who are catastrophically disabled. Accordingly, we amended § 17.36(b)(4) to reflect the co-payment requirement. We also made corresponding changes to § 17.36(d)(1) with respect to information to be included in the application for enrollment in the VA healthcare system.

In § 17.36(e), the definition of the term ''catastrophically disabled'' includes the requirement that the condition be ''permanent.'' Some commenters opposed the inclusion of this requirement. Although we have retained the requirement that the condition be ''permanent,'' we have made clarifying changes.

We believe that a condition causing an individual to be catastrophically disabled must be a ''permanent'' condition. Under the provisions of 38 U.S.C. 1705, priority category 4 consists of ''Veterans who are in receipt of increased pension based on a need of regular aid and attendance or by reason of being permanently housebound and other veterans who are catastrophically disabled.'' The words ''other veterans who are catastrophically disabled'' indicate that all veterans in priority category 4 are ''catastrophically disabled'' and are disabled to a similar extent. To be in receipt of increased pension based on a need of regular aid and attendance or by reason of being permanently housebound, a veteran must be permanently disabled (see 38 U.S.C. 1502 and 1521). We have thus construed this statutory priority category to include only veterans with permanent conditions. Our interpretation is consistent with other provisions of Pub. L. 104–262, which, as noted above, includes the mandate that VA implement a national enrollment system. In this regard, the four examples used to describe the term ''disabled'' in 38 U.S.C. 1706 are permanent conditions, *i.e.*, spinal cord dysfunction, blindness, amputations, and serious mental illness. Moreover, the legislative history of Pub. L. 104–262 refers to a permanent condition, spinal cord injury, to describe the type of disabilities intended to be covered by the term ''catastrophically disabled'' (House Report No. 690, 104th Cong., 2d Sess. 7 (1996)) and the Joint Explanatory Statement for H.R. 3118, The Proposed Veterans' Health Care Eligibility Reform Act of 1996 (142 Cong. Rec. S11642, S11646 (daily ed. Sept. 28, 1996)).

We have, however, clarified the criteria for determining when a condition is permanent. In this regard, we have revised the second sentence in § 17.36(e) to read as follows: ''This definition is met if an individual has been found by the Chief of Staff (or equivalent clinical official) at the VA facility where the individual was examined to have a permanent condition specified in paragraph (e)(1) of this section; to meet permanently one of the conditions specified in paragraph (e)(2) of this section by a clinical evaluation of the patient's medical records that documents that the patient previously met the permanent criteria and continues to meet such criteria (permanently) or would continue to meet such criteria (permanently) without the continuation of on-going treatment; or to meet permanently one of the conditions specified in paragraph (e)(2) of this section by a current medical examination that documents that the patient meets the permanent criteria and will continue to meet such criteria (permanently) or would continue to meet such criteria (permanently) without the continuation of on-going treatment.'' This clarifies that a veteran who previously met the criteria in § 17.36(e)(2) for establishing a permanent condition would continue to meet the criteria even if the condition has improved because of ongoing treatment. In our view, on-going treatment does not change the finding that the condition is permanent.

In § 17.36, paragraph (e) defines the term ''catastrophically disabled'' and includes provisions stating that the definition is met if certain conditions are met. One commenter argued that in order to be determined to be ''catastrophically disabled'' a veteran should be required to meet the definition or the conditions, but not both. No changes are made based on this comment. Both the definition and the specific conditions or the functional disability levels that meet the definition are necessary to ensure that the term ''catastrophically disabled'' is uniformly applied.

Under the provisions of § 17.36(b)(4), a veteran may be determined to be catastrophically disabled and thereby included in priority category 4 only if determined to be catastrophically disabled by the Chief of Staff (or equivalent clinical official) at the VA facility where the veteran was examined. One commenter suggested that VA include in the regulations additional information concerning examinations for determining whether veterans are catastrophically disabled, *i.e.*, how a first-time applicant could obtain catastrophically disabled status, how the examination would be conducted, and whether records of previous treatment and examination could be substituted for a current examination. No changes are made

based on this comment. We will consider a subsequent amendment to this final rule to include additional procedures as warranted. Currently, examinations could be provided based on the request of a veteran or VA. Also, the Chief of Staff (or equivalent clinical official) at the VA facility where the individual was examined would make decisions based on the criteria in the final rule for determining whether a veteran is catastrophically disabled and could use any available records in making the decision. Further, the decisionmaker could make a decision without requiring a new examination if the records are sufficient.

One commenter asserted that the determination by the Chief of Staff (or equivalent clinical official) constitutes an appeal and that the final rule should include appeal procedures and time limits for this decision. No changes are made based on this comment. The decision by the Chief of Staff (or equivalent clinical official) constitutes the initial decision. It is that decision that could be appealed.

In the proposal, the conditions for determining whether a veteran is catastrophically disabled included a finding that the veteran is ''[d]ependent in 4 or more Activities of Daily Living (eating, dressing, bathing, toileting, transferring, incontinence of bowel and/or bladder), with at least 4 of the dependencies being permanent, using the Katz scale.'' Commenters argued that the reference to 4 should be lowered in both places to 3. We have compared the conditions with the definition of catastrophically disabled and have concluded that the definition would still be met if the number were changed to 3 in both places. Accordingly, we have made these changes in the final rule.

In the proposal, the conditions for determining whether a veteran is catastrophically disabled include a finding that the veteran scored 30 or lower using the Global Assessment of Functioning. Commenters asserted that the score for the Global Assessment of Functioning should be raised to 40. No changes are made based on these comments. Patients above 30 are in a range described as severe but less than catastrophic in that they do not require personal or mechanical assistance to leave home or bed or require constant supervision to avoid physical harm to self or others. Accordingly, they would not meet the definition of catastrophically disabled.

Commenters recommended that the list of conditions in § 17.36(e) that would establish that a veteran is ''catastrophically disabled'' should be expanded to include chronic and severe mental illnesses, Amyotrophic Lateral Sclerosis, Multiple Sclerosis, a score of 5 or higher on the Kurtzke Expanded Disability Status Scale for Multiple Sclerosis, and possibly other things. No changes are made based on these comments. Conditions not specifically mentioned, including those mentioned by the commenters, would be covered when the criteria in § 17.36(e) are met. It is impractical to attempt to list all of the specific conditions that would be covered by the criteria.

The list of conditions for establishing that a veteran is catastrophically disabled includes a condition resulting from two of the specified procedures in § 17.36(e)(1) provided the two procedures were not on the same limb. The proposed procedures included ''Amputation of toe (only if accompanied by V49.71 code for amputated great toe) (procedure code 84.11).'' These provisions are clarified to reflect more clearly that the toe amputated must be the great toe.

The proposed list of conditions for establishing that a veteran is catastrophically disabled included permanent ''unspecified hemiplegia.'' This is deleted. The final rule provides that a veteran is catastrophically disabled upon a finding of a score of 2 or lower on at least 4 of the 13 motor items using the Functional Independence Measure. This finding necessarily could be made if a veteran had hemiplegia that would be catastrophically disabling. This Functional Independence Measure is a more appropriate method of determining whether hemiplegia constitutes a catastrophic disability.

The proposed list of conditions for establishing that a veteran is catastrophically disabled included a score of 14 or higher on the Activities of Daily Living (ADL) Index using Resource Utilizations Group (RUG) III. This condition is deleted. The ADL section is one part of a complex multidimensional assessment tool known as the Minimum Data Set (MDS). All sections in the MDS contribute to the construction of 44 RUGs (RUG III). Therefore isolating one section and attempting to calculate a numerical score invalidates the purpose for which the instrument was designed.

Moreover, this should not have any negative effects on veterans. The category of veterans intended to meet the definition of catastrophically disabled based on the ADL criteria necessarily would also meet the definition of catastrophically disabled based on the criteria in §§ 17.36(e)(2)(i) or (iii) *i.e.*, dependent in 3 or more Activities of Daily Living (eating, dressing, bathing, toileting, transferring, incontinence of bowel and/or bladder), with at least 3 of the dependencies being permanent, using the Katz scale; or a score of 2 or lower on at least 4 of the 13 motor items using the Functional Independence Measure. In the ADL provision, ''dependent'' was intended to mean fully dependent. Being fully dependent is represented by a rating of 1 on the Katz scale. We have clarified the rule accordingly.

One commenter questioned how the definition and conditions were established for determining when an individual is ''catastrophically disabled''. In this regard, we note that the definition and conditions were formulated by knowledgeable VA clinical experts.

One commenter asserted that VA form 10–10 EZ should be amended to specifically ask whether a veteran is requesting an examination to determine whether the veteran is catastrophically disabled. No changes are made based on this comment. The issue of whether an individual should be examined is a complex matter (see § 17.36(e)) that does not lend itself readily to the form. Further, before a veteran would be removed from the list of enrollees based on a priority status lower than priority category 4, the veteran first would be provided a letter advising of the opportunity to request that action be taken (including an examination, if needed) to determine whether the veteran is catastrophically disabled and thereby eligible for inclusion in priority category 4.

Additional Enrollment Issues

One commenter opposed any enrollment system that could exclude any categories of veterans from access to medical care. No changes are made based on this comment. The Veterans' Health Care Eligibility Reform Act requires that we establish a system for the management of hospital and outpatient care based on priorities and available funding.

One commenter asserted that nonservice-connected Purple Heart recipients should be included in priority category 3. No changes are made based on this comment. The priority categories are established by statute, and there is no authority to include this category of veterans in priority category 3.

One commenter asserted that within priority category 7, military retirees should be given a subpriority based on the further assertion that military retirement benefits are inadequate. No changes are made based on this

comment. This final rule is not an appropriate forum for addressing military retirement benefits.

One commenter asserted that enrollment status decisions should be transferable among VA medical facilities. In response, we have added a note to § 17.36 to clarify that a veteran's enrollment status will be honored by all VA medical facilities in the United States (care abroad is covered by 38 U.S.C. 1724).

One commenter asserted that veterans should be given a presumption of entitlement to medical services when they initially apply or reapply for enrollment and should receive medical services until an appeal is decided. No changes are made based on this comment. We have no authority to include such provisions in the final rule.

One commenter asserted that enrollment should guarantee a veteran access to the ''medical benefits package'' for a certain period of time, *e.g.* until the end of the fiscal year. Commenters also asserted that after a number of years of receiving VA medical services an enrollee's right to receive medical services should become permanent. No changes are made based on these comments. It is our intent under the provisions of § 17.36 to try to predict accurately for the whole fiscal year how many priority categories will be funded. However, the regulations must include provisions for amending the determination at any time because VA can only provide services insofar as there are available funds to cover the services. Further, we have no authority to make permanent an enrollee's right to receive medical services.

Under the provisions of § 17.36(d)(4)(iii), a veteran who had been enrolled based on inclusion in priority category 5 will be disenrolled if the veteran does not return to VA a completed form VA Form 10–10EZ. One commenter asserted that this provision could cause some of the most vulnerable veterans to lose their medical benefits. No changes are made based on this comment. This will not disadvantage veterans who are disenrolled merely because they did not return the form. Under the provisions of § 17.36 such a veteran may reapply to be enrolled at any time and thereby supply the information necessary to determine their enrollment priority category.

One commenter opposed the provisions in § 17.36(d)(4)(i) which state that a veteran will be removed from the list of enrollees if the veteran submits to a VA medical center a signed document stating that the veteran no longer wishes to be enrolled. No changes are made based on this comment. If a veteran no longer intends to obtain VA care we would like to be informed so that we can better predict the demand for VA care. However, this will not disadvantage those who wish to restore their enrollment status since, as noted above, a veteran may reapply to be enrolled at any time.

Commenters asserted that the letter that VA sends veterans concerning their enrollment status should indicate which priority group the veteran was placed in and all co-payment information. We intend to provide this information to enrolled veterans as soon as possible.

Under the provisions of Pub. L. 105–368, a veteran enrolled based on an illness associated with service in combat in a war after the Gulf War or during a period of hostility after November 11, 1998, is included in priority category 6 and is eligible for VA hospital and outpatient care provided in the medical benefits package for the illness. The final rule is amended to reflect this statutory change.

Hospital and Outpatient Care to Veterans Who are not Enrolled in the VA Healthcare System

Consistent with the provisions of Pub. L. 104–262, § 17.37 specifies when VA may provide hospital and outpatient care to veterans who are not enrolled in the VA healthcare system. One commenter asserted that this should include a statement that a veteran who is not enrolled in the VA healthcare system may receive an examination to determine whether the veteran is eligible for inclusion in priority category 4 based on a finding that the veteran is catastrophically disabled. We agree and have amended § 17.37 accordingly.

Medical Benefits Package

One commenter argued that the final rule should concern only a national enrollment system and, accordingly, should not include a medical benefits package. Although the commenter concluded that VA has inherent authority to establish a medical benefits package, the commenter asserted that the proposed rule purportedly was designed solely ''to implement the Veterans' Health Care Eligibility Reform Act of 1996'' and that the ''medical benefits package'' went beyond this statutory authority. The commenter also asserted that the statutory provisions at 38 U.S.C. 1701 and the regulations at 38 CFR 17.30 are adequate for determining what care will be provided to enrolled veterans. The commenter further asserted that we did not provide sufficient rationale or justification for the establishment of a ''medical benefits package.'' No changes are made based on these comments. Although the Veterans' Health Care Eligibility Reform Act of 1996 did not direct VA to create a medical benefits package, we believe that it is necessary under the requirements of the Administrative Procedure Act to inform affected individuals concerning the care that would or would not be provided to veterans enrolled in the VA healthcare system. The definitions of terms in 38 U.S.C. 1701 and 38 CFR 17.30 are not adequate by themselves to allow individuals to make such determinations. Further, the following statement in the preamble portion of the proposed rule provided the rational basis for the medical benefits package: ''The Secretary has authority to provide healthcare as determined to be medically needed. In our view, medically needed constitutes care that is determined by appropriate healthcare professionals to be needed to promote, preserve, or restore the health of the individual and to be in accord with generally accepted standards of medical practice. The care included in the proposed 'medical benefits package' is intended to meet these criteria.''

Commenters asserted that infertility services, pregnancy and delivery, surgical implantation of penile prostheses, and membership in spas and health clubs should be included in the medical benefits package. As noted above, the medical benefits package would include ''care that is determined by appropriate healthcare professionals to be needed to promote, preserve, or restore the health of the individual and to be in accord with generally accepted standards of medical practice.'' Upon reconsideration, we conclude that pregnancy and delivery services (to the extent we have legal authority to provide such services) meet these criteria and should be included in the medical benefits package. We also conclude that membership in spas and health clubs does not meet these criteria and should not be included. Further, under these criteria, we have determined that reproductive sterilization, surgery to reverse voluntary sterilization, infertility services (other than in vitro fertilization), and surgical implantation of penile prostheses should not be excluded. Appropriate changes are made to the medical benefits package to reflect these determinations.

Commenters asserted that the ''medical benefits package'' should cover all emergency care for all enrolled veterans. No changes are made based on these comments. The final rule includes in the ''medical benefits package'' all of

the emergency care that VA is authorized to provide to enrolled veterans (see 38 U.S.C. 1703, 1728).

Priority category 6 includes veterans solely seeking care for a disorder associated with exposure to a toxic substance or radiation or for a disorder associated with service in the Southwest Asia theater of operations during the Gulf War, as provided in 38 U.S.C. 1710(e). One commenter asserted that these veterans should be eligible to receive the full ''medical benefits package'' because of such disorders. No changes are made based on this comment. The restrictions for this category are required by 38 U.S.C. 1710(e).

One commenter asserted that the final rule should include provision for ''long-term care services.'' No changes are made based on this comment. The medical benefits package includes non-institutional long-term care services, such as home health care. The statutory framework for the enrollment system does not cover nursing home care.

The medical benefits package includes prescription drugs available under the VA national formulary system. Commenters argued that this is inadequate based on the assertion that this would limit drugs only to those listed and exclude any opportunity for using non-listed drugs. No changes are made based on these comments. The national formulary system includes a mechanism for the provision of drugs and medicines not listed in the formulary.

Commenters recommend that the ''medical benefits package'' include a statement that VA will maintain its capacity to treat disabled veterans in accordance with the provisions of 38 U.S.C. 1706. No changes are made based on these comments. The statutory provisions are adequate by themselves to provide notice of this requirement.

Commenters asserted that a determination regarding care received under the ''medical benefits package'' should only be made by a physician in the appropriate medical specialty and that a veteran should have direct access to the medical specialist of choice. No changes are made based on these comments. Consistent with the trends in industry practice, we believe that generally veterans should first meet with primary care healthcare professionals and then be referred to medical specialists, if necessary.

Commenters asserted that the letter that VA sends veterans concerning their enrollment status should specify what services are available to enrollees. No changes are made based on these comments. The enrollment status letter will provide an overview of the services available and will include a toll-free telephone number for veterans to call for further information.

We also have made a clarifying change to the medical benefits package to state that it includes the completion of certain forms (*e.g.*, Family Medical Leave forms, life insurance applications, Department of Education forms for loan repayment exemptions based on disability, non-VA disability program forms) by healthcare professionals based on an examination or knowledge of the veteran's condition, but not including the completion of forms for examinations where payment for such examinations cannot be paid to VA but can be paid to other health care practitioners. This is a medical service that generally is provided under customary medical practice.

Notice of Priority Categories Eligible for Enrollment

The proposed rule provided for the Secretary to publish notices in the notice section of the **Federal Register** announcing which categories of veterans are eligible to be enrolled. One commenter asserted that the determinations made must be published as rules and that such rules can be made only after prior notice and comment. In response, we have changed the provisions of the final rule to provide for inclusion of the announcements by the Secretary in the regulatory material at § 17.36. Determinations regarding notice and comment will be made in accordance with the provisions of the Administrative Procedure Act.

Also, the criteria in § 17.36 for determining which categories of veterans are eligible to be enrolled are clarified to more accurately reflect the elements necessary for making the determination.

Appeals

Commenters asserted that the proposed rule did not contain sufficient notice of appeal rights for enrollment determinations. In response, we have added information to § 17.36(d)(5) stating that the letter providing notification of enrollment status (enrollment or disenrollment) will include an effective date for any changes and will include a statement regarding appeal rights.

As stated in the proposal, veterans may appeal VA decisions regarding enrollment and disenrollment to the Board of Veterans' Appeals and the Court of Veterans Appeals. Commenters asserted that actions on appeals to the Board take too long and that special intermediate appeal procedures must be established to protect veterans' access to healthcare. Most of the enrollment determinations will be based on the ministerial application of determinations made by the VA's Veterans Benefits Administration. There is already a process for obtaining reconsideration of these VBA determinations at the Regional Office level. It would be inappropriate for VA's Veterans Health Administration (VHA) which administers the National Enrollment System to provide appellate rights for these VBA issues. Further, although we are not required to do so, we are in the process of formulating voluntary intermediate reconsideration procedures for VHA decisions (63 FR 9990). In this regard, we are considering whether to apply such voluntary intermediate appeal procedures to certain VHA enrollment issues, such as decisions concerning catastrophic disabilities and means testing.

One commenter asserted that a veteran should not lose benefits for at least 90 days or until the completion of an appeal. No changes are made based on this comment. We have no authority to establish such a rule.

Commenters asserted that the Presidential Memorandum on Federal Agency Compliance with the Patient Bill of Rights requires appeal procedures for enrollment issues. No changes are made based on these comments. This Memorandum was intended to ensure additional process for medical determinations not subject to the appellate jurisdiction of the Board of Veterans Appeals, such as the need for and appropriateness of specific types of medical care and treatment for an individual. Further, as noted above, we are taking steps to establish intermediate appeal procedures as appropriate.

Commenters asserted that the final rule should specifically state that the Board of Veterans Appeals has appellate jurisdiction of VHA determinations concerning whether a veteran is catastrophically disabled. No changes are made based on these comments. We agree that under 38 CFR 20.101(b) the Board has jurisdiction over these determinations. Further, we do not believe that there is a need to include specific provisions in the final rule regarding this matter.

Miscellaneous

Non-substantive changes have been made for purposes of clarification.

Announcement Regarding Enrollment of Priority Categories

VA will enroll all 7 priority categories of veterans for the period October 1,

1999 through September 30, 2000, unless changed by a subsequent rulemaking document.

OMB

This document has been reviewed by the Office of Management and Budget under Executive Order 12866.

Paperwork Reduction Act

The collection of information contained in the notice of the proposed rulemaking was submitted to the Office of Management and Budget (OMB) for review in accordance with the Paperwork Reduction Act (44 U.S.C. 3504(h)). The information collection subject to this rulemaking concerns:

(1) *Initial Application for Health Benefits.* Under the provisions of § 17.36(d)(1), a veteran who wishes to be enrolled must apply by submitting a VA Form 10–10EZ to a VA medical facility. Veterans applying based on inclusion in categories 1, 2, 3, 6, and 7 do not need to complete section II, but must complete the rest of the form. Veterans applying based on inclusion in priority category 4 must complete all or a portion of VA Form 10–10EZ as set forth in § 17.36(d)(1). Veterans applying based on inclusion in priority category 5 must complete the entire form. VA Form 10–10EZ is set forth in full at § 17.36(f). This information is needed to determine whether a veteran is eligible to be enrolled in the VA healthcare system and, consequently, whether the veteran is eligible for VA hospital and outpatient care;

(2) *Yearly Re-application for Health Benefits.* Under the provisions of § 17.36(d)(4)(iii), veterans enrolled based on inclusion in priority category 5 will be mailed a Form 10–10EZ on a yearly basis. They will be requested to complete the form and return the form to the address on the return envelope. VA Form 10–10EZ is set forth in full at § 17.36(f). This information is needed to determine whether a veteran is eligible to continue to be enrolled in the VA healthcare system, and, consequently, whether the veteran is eligible to continue to receive VA hospital and outpatient care;

(3) *Voluntary disenrollment.* Under the provisions of § 17.36(d)(4)(i), a veteran wishing to disenroll and forgo VA hospital and outpatient care must submit to a VA medical center a signed document stating that the veteran no longer wishes to be enrolled. This information is needed to determine the identity of those veterans wishing to disenroll and forgo VA hospital and outpatient care. This will help VA determine how to allocate available funding for hospital and outpatient care.

Interested parties were invited to submit comments on the collection of information. However, no comments were received. OMB has approved this information collection under control number 2900–0091.

VA is not authorized to impose a penalty on persons for failure to comply with information collection requirements which do not display a current OMB control number, if required.

Regulatory Flexibility Act

The Secretary hereby certifies that this proposed rule will not have a significant economic impact on a substantial number of small entities as they are defined in the Regulatory Flexibility Act, 5 U.S.C. 601–612. This proposed rule would affect only individuals. Accordingly, pursuant to 5 U.S.C. 605(b), this proposed rule is exempt from the initial and final regulatory flexibility analysis requirements of §§ 603 and 604.

The Catalog of Federal domestic assistance numbers for the programs affected by this rule are 64.005, 64.007.64.008, 64,009, 64.010, 64.011, 64.012, 64.013, 64.014, 64.015, 64.016, 64.018, 64.019, 64.022, and 64.025.

List of Subjects in 38 CFR Part 17

Administrative practice and procedure, Alcohol abuse, Alcoholism, Claims, Day care, Dental health, Drug abuse, Foreign relations, Government contracts, Grant programs— health, Grant programs—veterans, Health care, Health facilities, Health professions, Health records, Homeless, Medical and dental schools, Medical devices, Medical research, Mental health programs, Nursing homes, Philippines, Reporting and recordkeeping requirements, Scholarships and fellowships, Travel and transportation expenses, Veterans.

Approved: July 16, 1999.

Togo D. West, Jr.,

Secretary of Veterans Affairs.

For the reasons set out in the preamble, 38 CFR part 17 is amended as set forth below:

PART 17—MEDICAL

1. The authority citation for part 17 continues to read as follows:

Authority: 38 U.S.C. 501, 1721, unless otherwise noted.

§ 17.34 [Amended]

2. The first sentence of § 17.34 is amended by removing ''When an application'' and adding, in its place, ''Subject to the provisions of §§ 17.36 through 17.38, when an application''.

3. An undesignated center heading, § 17.36, and a parenthetical at the end of the section are added to read as follows:

Enrollment Provisions and Medical Benefits Package

§ 17.36 Enrollment—provision of hospital and outpatient care to veterans.

(a) *Enrollment requirement for veterans.* (1) Except as otherwise provided in § 17.37, a veteran must be enrolled in the VA healthcare system as a condition for receiving VA hospital and outpatient care.

Note to paragraph (a)(1): A veteran may apply to be enrolled at any time. (See § 17.36(d)(1).)

(2) Except as provided in paragraph (a)(3) of this section, a veteran enrolled under this section is eligible for VA hospital and outpatient care as provided in the ''medical benefits package'' set forth in § 17.38.

Note to paragraph (a)(2): A veteran's enrollment status will be recognized throughout the United States.

(3) A veteran enrolled based on having a disorder associated with exposure to a toxic substance or radiation, for a disorder associated with service in the Southwest Asia theater of operations during the Gulf War, or any illness associated with service in combat in a war after the Gulf War or during a period of hostility after November 11, 1998, as provided in 38 U.S.C. 1710(e), is eligible for VA hospital and outpatient care provided in the ''medical benefits package'' set forth in § 17.38 for the disorder.

(b) *Categories of veterans eligible to be enrolled.* The Secretary will determine which categories of veterans are eligible to be enrolled based on the following order of priority:

(1) Veterans with a singular or combined rating of 50 percent or greater based on one or more service-connected disabilities or unemployability.

(2) Veterans with a singular or combined rating of 30 percent or 40 percent based on one or more service-connected disabilities.

(3) Veterans who are former prisoners of war; veterans with a singular or combined rating of 10 percent or 20 percent based on one or more service-connected disabilities; veterans who were discharged or released from active military service for a disability incurred or aggravated in the line of duty; veterans who receive disability compensation under 38 U.S.C. 1151; veterans whose entitlement to disability compensation is suspended pursuant to 38 U.S.C. 1151, but only to the extent

that such veterans' continuing eligibility for hospital and outpatient care is provided for in the judgment or settlement described in 38 U.S.C. 1151; veterans whose entitlement to disability compensation is suspended because of the receipt of military retired pay; and veterans receiving compensation at the 10 percent rating level based on multiple noncompensable service-connected disabilities that clearly interfere with normal employability.

(4) Veterans who receive increased pension based on their need for regular aid and attendance or by reason of being permanently housebound and other veterans who are determined to be catastrophically disabled by the Chief of Staff (or equivalent clinical official) at the VA facility where they were examined; except that a veteran who is catastrophically disabled and who must agree under 38 U.S.C. 1710 to pay to the United States a co-payment as condition of receiving VA care, must agree to pay to the United States the applicable co-payment to be enrolled in priority category 4.

(5) Veterans not covered by paragraphs (b)(1) through (b)(4) of this section who are determined to be unable to defray the expenses of necessary care under 38 U.S.C. 1722(a).

(6) Veterans of the Mexican border period or of World War I; veterans solely seeking care for a disorder associated with exposure to a toxic substance or radiation, for a disorder associated with service in the Southwest Asia theater of operations during the Gulf War, or for any illness associated with service in combat in a war after the Gulf War or during a period of hostility after November 11, 1998, as provided and limited in 38 U.S.C. 1710(e); and veterans with 0 percent service-connected disabilities who are nevertheless compensated, including veterans receiving compensation for inactive tuberculosis.

(7) Veterans who agree to pay to the United States the applicable copayment determined under 38 U.S.C. 1710(f) and 1710(g). This category is further prioritized into the following subcategories:

(i) Noncompensable zero percent service-connected veterans; and

(ii) All other priority category 7 veterans.

(c) ***Federal Register*** *notification of eligible enrollees.* (1) It is anticipated that on or before August 1 of each year the Secretary will announce in paragraph (c)(2) of this section which categories of veterans are eligible to be enrolled. As necessary, the Secretary at any time may revise this determination by further amending paragraph (c)(2) of this section. The preamble to a **Federal Register** document announcing which priority categories are eligible to be enrolled must specify the projected number of fiscal year applicants for enrollment in each priority category, projected healthcare utilization and expenditures for veterans in each priority category, appropriated funds and other revenue projected to be available for fiscal year enrollees, and results—projected total expenditures for enrollees by priority category. The determination should include consideration of relevant internal and external factors, *e.g.*, economic changes, changes in medical practices, and waiting times to obtain an appointment for care. Consistent with these criteria, the Secretary will determine which categories of veterans are eligible to be enrolled based on the order of priority specified in paragraph (b) of this section.

(2) Unless changed by a rulemaking document in accordance with paragraph (c)(1) of this section, VA will enroll all priority categories of veterans set forth in § 17.36(b) for the period from October 1, 1999 through September 30, 2000.

(d) *Enrollment and disenrollment process*—(1) *Application for enrollment.* A veteran may apply to be enrolled in the VA healthcare system at any time. A veteran who wishes to be enrolled must apply by submitting a VA Form 10–10EZ to a VA medical facility. Veterans applying based on inclusion in priority categories 1, 2, 3, 6, and 7 do not need to complete section II, but must complete the rest of the form. Veterans applying based on inclusion in priority category 4 because of their need for regular aid and attendance or by being permanently housebound need not complete section II, but must complete the rest of the form. Veterans applying based on inclusion in priority category 4 because they are catastrophically disabled need not complete section II, but must complete the rest of the form, if: they agree to pay to the United States the applicable copayment determined under 38 U.S.C. 1710(f) and 1710(g); they are a veteran of the Mexican border period or of World War I or a veteran with a 0 percent service-connected disability who is nevertheless compensated; their catastrophic disability is a disorder associated with exposure to a toxic substance or radiation, or with service in the Southwest Asia theater of operations during the Gulf War as provided in 38 U.S.C. 1710(e); or their catastrophic disability is an illness associated with service in combat in a war after the Gulf War or during a period of hostility after November 11, 1998, as provided in 38 U.S.C. 1710(e). All other veterans applying based on inclusion in priority category 4 because they are catastrophically disabled must complete the entire form. Veterans applying based on inclusion in priority category 5 must complete the entire form. VA Form 10–10EZ is set forth in paragraph (f) of this section and is available from VA medical facilities.

Note to paragraph (d)(1): To remain enrolled based on inclusion in priority category 5, a veteran annually must return information to VA on a VA Form 10–10EZ as provided in paragraph (d)(4)(iii) of this section and otherwise meet the requirements for enrollment.

(2) *Action on application.* Upon receipt of a completed VA Form 10–10EZ, a VA network or facility director, or the Chief Network Officer, will accept a veteran as an enrollee upon determining that the veteran is in a priority category eligible to be enrolled as set forth in § 17.36(c)(2). Upon determining that a veteran is not in a priority category eligible to be enrolled, the VA network or facility director, or the Chief Network Officer, will inform the applicant that the applicant is ineligible to be enrolled.

(3) *Automatic enrollment.* Notwithstanding other provisions of this section, veterans who were notified by VA letter that they were enrolled in the VA healthcare system under the trial VA enrollment program prior to October 1, 1998, automatically will be enrolled in the VA healthcare system under this section if determined by a VA network or facility director, or the Chief Network Officer, that the veteran is in a priority category eligible to be enrolled as set forth in § 17.36(c)(2). Upon determining that a veteran is not in a priority category eligible to be enrolled, the VA network or facility director, or the Chief Network Officer, will inform the veteran that the veteran is ineligible to be enrolled.

(4) *Disenrollment.* A veteran enrolled under paragraph (d)(2) or (d)(3) of this section will be disenrolled only if:

(i) The veteran submits to a VA medical center a signed document stating that the veteran no longer wishes to be enrolled;

(ii) A VA network or facility director, or the Chief Network Officer, determines that the veteran is no longer in a priority category eligible to be enrolled, as set forth in § 17.36(c)(2); or

(iii) A VA network or facility director, or the Chief Network Officer, determines that the veteran has been enrolled based on inclusion in priority category 5; determines that the veteran was sent by mail a VA Form 10–10EZ; and determines that the veteran failed to

return the completed form to the address on the return envelope within 60 days from receipt of the form. VA Form 10–10EZ is set forth in paragraph (f) of this section.

(5) *Notification of enrollment status.* Notice of a decision by a VA network or facility director, or the Chief Network Officer, regarding enrollment status will be provided to the affected veteran by letter and will contain the reasons for the decision. The letter will include an effective date for any changes and a statement regarding appeal rights. The decision will be based on all information available to the decisionmaker, including the information contained in VA Form 10–10EZ.

(e) *Catastrophically disabled.* For purposes of this section, catastrophically disabled means to have a permanent severely disabling injury, disorder, or disease that compromises the ability to carry out the activities of daily living to such a degree that the individual requires personal or mechanical assistance to leave home or bed or requires constant supervision to avoid physical harm to self or others. This definition is met if an individual has been found by the Chief of Staff (or equivalent clinical official) at the VA facility where the individual was examined to have a permanent condition specified in paragraph (e)(1) of this section; to meet permanently one of the conditions specified in paragraph (e)(2) of this section by a clinical evaluation of the patient's medical records that documents that the patient previously met the permanent criteria and continues to meet such criteria (permanently) or would continue to meet such criteria (permanently) without the continuation of on-going treatment; or to meet permanently one of the conditions specified in paragraph (e)(2) of this section by a current medical examination that documents that the patient meets the permanent criteria and will continue to meet such criteria (permanently) or would continue to meet such criteria (permanently) without the continuation of on-going treatment.

(1) Quadriplegia and quadriparesis (ICD–9–CM Code 344.0x: 344.00, 344.01, 344.02, 344.03, 344.04, 3.44.09), paraplegia (ICD–9–CM Code 344.1), blindness (ICD–9–CM Code 369.4), persistent vegetative state (ICD–9–CM Code 780.03), or a condition resulting from two of the following procedures (ICD–9–CM Code 84.x or associated V Codes when available or Current Procedural Terminology (CPT) Codes) provided the two procedures were not on the same limb:

(i) Amputation through hand (ICD–9–CM Code 84.03 or V Code V49.63 or CPT Code 25927);

(ii) Disarticulation of wrist (ICD–9–CM Code 84.04 or V Code V49.64 or CPT Code 25920);

(iii) Amputation through forearm (ICD–9–CM Code 84.05 or V Code V49.65 or CPT Codes 25900, 25905);

(iv) Disarticulation of forearm (ICD–9–CM Code 84.05 or V Code V49.66 or CPT Codes 25900, 25905);

(v) Amputation or disarticulation through elbow. (ICD–9–CM Code 84.06 or V Code V49.66 or CPT 24999);

(vi) Amputation through humerus (ICD–9–CM Code 84.07 or V Code V49.66 or CPT Codes 24900, 24920);

(vii) Shoulder disarticulation (ICD–9–CM Code 84.08 or V Code V49.67 or CPT Code 23920);

(viii) Forequarter amputation (ICD–9–CM Code 84.09 or CPT Code 23900);

(ix) Lower limb amputation not otherwise specified (ICD–9–CM Code 84.10 or V Code V49.70 or CPT Codes 27880, 27882);

(x) Amputation of great toe (ICD–9–CM Code 84.11 or V Code V49.71 or CPT Codes 28810, 28820);

(xi) Amputation through foot (ICD–9–CM Code 84.12 or V Code V49.73 or CPT Codes 28800, 28805);

(xii) Disarticulation of ankle (ICD–9–CM Code 84.13 or V Code V49.74 or CPT 27889);

(xiii) Amputation through malleoli (ICD–9–CM Code 84.14 or V Code V49.75 or CPT Code 27888);

(xiv) Other amputation below knee (ICD–9–CM Code 84.15 or V Code V49.75 or CPT Codes 27880, 27882);

(xv) Disarticulation of knee (ICD–9–CM Code 84.16 or V Code V49.76 or CPT Code 27598);

(xvi) Above knee amputation (ICD–9–CM Code 84.17 or V Code V49.76 or CPT Code 27598);

(xvii) Disarticulation of hip (ICD–9–CM Code 84.18 or V Code V49.77 or CPT Code 27295); and

(xviii) Hindquarter amputation (ICD–9–CM Code 84.19 or CPT Code 27290).

(2)(i) Dependent in 3 or more Activities of Daily Living (eating, dressing, bathing, toileting, transferring, incontinence of bowel and/or bladder), with at least 3 of the dependencies being permanent with a rating of 1, using the Katz scale.

(ii) A score of 10 or lower using the Folstein Mini-Mental State Examination.

(iii) A score of 2 or lower on at least 4 of the 13 motor items using the Functional Independence Measure.

(iv) A score of 30 or lower using the Global Assessment of Functioning.

(f) *VA Form 10–10EZ.* [insert actual photocopy of VA Form 10–10EZ]

BILLING CODE 8320–01–P

OMB Approved No. 2900-0091
Estimated Burden Avg. 20 min.

Department of Veterans Affairs

APPLICATION FOR HEALTH BENEFITS

SECTION I - GENERAL INFORMATION

1A. TYPE OF BENEFIT(S) APPLIED FOR *(You may check more than one)*

☐ HEALTH SERVICES ☐ NURSING HOME ☐ DOMICILIARY ☐ DENTAL ☐ ENROLLMENT

1B. IF APPLYING FOR HEALTH SERVICES, WHICH VA MEDICAL CENTER OR OUTPATIENT CLINIC DO YOU PREFER

2. VETERAN'S NAME *(Last, First, MI)*	3. OTHER NAMES USED	4. GENDER *(Check one)* ☐ M ☐ F

5. SOCIAL SECURITY NUMBER	6. CLAIM NUMBER	7. DATE OF BIRTH *(mm/dd/yyyy)*	8. RELIGION

9A. CURRENT MAILING ADDRESS *(Street)*	9B. CITY	9C. STATE	9D. ZIP

9E. COUNTY	10. HOME TELEPHONE NUMBER ( )	11. WORK TELEPHONE NUMBER ( )

12. CURRENT MARITAL STATUS *(Check one)* ☐ MARRIED ☐ NEVER MARRIED ☐ SEPARATED ☐ WIDOWED ☐ DIVORCED ☐ UNKNOWN

13A. LAST BRANCH OF SERVICE	13B. LAST ENTRY DATE	13C. LAST DISCHARGE DATE	13D. DISCHARGE TYPE	13E. MILITARY SERVICE NUMBER

14. CIRCLE YES OR NO

A. ARE YOU A FORMER PRISONER OF WAR	YES	NO	H. DO YOU HAVE A MILITARY DENTAL INJURY	YES	NO
B. DO YOU HAVE A VA SERVICE-CONNECTED RATING	YES	NO	I. DO YOU HAVE A SPINAL CORD INJURY	YES	NO
B1. IF YES, WHAT IS YOUR RATED PERCENTAGE		%	J. ARE YOU ELIGIBLE FOR MEDICAID	YES	NO
C. ARE YOU RECEIVING A VA PENSION	YES	NO	K. ARE YOU ENROLLED IN MEDICARE HOSPITAL INSURANCE PART A	YES	NO
D. ARE YOU RETIRED FROM THE MILITARY	YES	NO	K1. EFFECTIVE DATE		
D1. WAS YOUR RETIREMENT THE RESULT OF A DISABILITY	YES	NO	L. ARE YOU ENROLLED IN MEDICARE HOSPITAL INSURANCE PART B	YES	NO
D2. WERE YOU REGULARLY RETIRED - (20+ yrs.)	YES	NO	L1. EFFECTIVE DATE		
E. WERE YOU EXPOSED TO TOXINS IN THE GULF WAR	YES	NO	M. MEDICARE CLAIM NUMBER		
F. WERE YOU EXPOSED TO AGENT ORANGE	YES	NO	N. NAME EXACTLY AS IT APPEARS ON YOUR MEDICARE CARD		
G. WERE YOU EXPOSED TO RADIATION	YES	NO			

15A. VETERAN'S EMPLOYMENT STATUS *(check one)* ☐ NOT EMPLOYED ☐ EMPLOYED ☐ RETIRED *If employed or retired, complete item 15B* / / *Date of retirement*	15B. COMPANY NAME, ADDRESS AND TELEPHONE NUMBER
16A. SPOUSE'S EMPLOYMENT STATUS *(check one)* ☐ NOT EMPLOYED ☐ EMPLOYED ☐ RETIRED *If employed or retired, complete item 16B* / / *Date of retirement*	16B. COMPANY NAME, ADDRESS AND TELEPHONE NUMBER
17A. VETERAN'S HEALTH INSURANCE COMPANY	18A. SPOUSE'S HEALTH INSURANCE COMPANY
17B. NAME OF POLICY HOLDER	18B. NAME OF POLICY HOLDER
17C. POLICY NUMBER / 17D. GROUP CODE	18C. POLICY NUMBER / 18D. GROUP CODE
19A. NAME, ADDRESS AND RELATIONSHIP OF NEXT OF KIN	19B. NEXT OF KIN'S HOME TELEPHONE NUMBER ( ) / 19C. NEXT OF KIN'S WORK TELEPHONE NUMBER ( )
20A. NAME, ADDRESS AND RELATIONSHIP OF EMERGENCY CONTACT	20B. EMERGENCY CONTACT'S HOME TELEPHONE NUMBER ( ) / 20C. EMERGENCY CONTACT'S WORK TELEPHONE NUMBER ( )

21. I DESIGNATE THE FOLLOWING INDIVIDUAL TO RECEIVE POSSESSION OF ALL MY PERSONAL PROPERTY LEFT ON PREMISES UNDER VA CONTROL AFTER MY DEPARTURE OR AT THE TIME OF MY DEATH. *(Check one)* ***(This does not constitute a will or transfer of title.)***

☐ EMERGENCY CONTACT ☐ NEXT OF KIN

22A. IS NEED FOR CARE DUE TO ON THE JOB INJURY *(Check one)*	22B. IS NEED FOR CARE DUE TO ACCIDENT *(Check one)*
☐ YES ☐ NO	☐ YES ☐ NO

APPLICATION FOR HEALTH BENEFITS, Continued	VETERAN'S NAME	SOCIAL SECURITY NUMBER

SECTION II - FINANCIAL ASSESSMENT

IIA - DEPENDENT INFORMATION *(Use a separate sheet for additional dependents)*

1. SPOUSE'S NAME *(Last, First, MI)*	2. CHILD'S NAME *(Last, First, MI)*	
3. SPOUSE'S SOCIAL SECURITY NUMBER	4. SPOUSE'S DATE OF BIRTH *(mm/dd/yyyy)*	5. CHILD'S DATE OF BIRTH *(mm/dd/yyyy)*
6. SPOUSE'S ADDRESS *(Street, City, State, ZIP)*	7. CHILD'S SOCIAL SECURITY NUMBER	
8. SPOUSE'S TELEPHONE NUMBER	9. CHILD'S RELATIONSHIP TO YOU *(Circle one)* *Son* *Daughter* *Stepson* *Stepdaughter*	
10. DATE OF MARRIAGE *(mm/dd/yyyy)*	11. DATE CHILD BECAME YOUR DEPENDENT	
12. IF YOUR SPOUSE OR DEPENDENT CHILD DID NOT LIVE WITH YOU LAST YEAR, ENTER THE AMOUNT YOU CONTRIBUTED TO THEIR SUPPORT SPOUSE $ CHILD $	13. EXPENSES PAID BY YOUR DEPENDENT CHILD FOR COLLEGE, VOCATIONAL REHABILITATION OR TRAINING *(tuition, books, materials, etc.)* $	
14. WAS CHILD PERMANENTLY AND TOTALLY DISABLED BEFORE THE AGE OF 18? ☐ YES ☐ NO	15. IF CHILD IS BETWEEN 18 AND 23 YEARS OF AGE, DID CHILD ATTEND SCHOOL LAST CALENDAR YEAR? ☐ YES ☐ NO	

IIB - FINANCIAL DISCLOSURE

You are not required to provide the financial information in this Section. However, current law may require VA to consider your household financial situation to determine your eligibility for enrollment and/or cost-free care of your nonservice-connected (NSC) conditions. If you are 0% SC noncompensable or NSC (and are not an Ex-POW, WWI veteran or VA pensioner) and your annual household income (or combined income and net worth) exceeds the established threshold, you must agree to pay VA co-payments for care of your NSC conditions to be eligible for enrollment. See Section III - Consent and Signature.

☐ **YES,** I WILL PROVIDE SPECIFIC INCOME AND/OR ASSET INFORMATION TO HAVE ELIGIBILITY FOR CARE DETERMINED. *Complete all sections below that apply to you with last calendar year's information. Sign and date the application.*

☐ **NO,** I DO NOT WISH TO PROVIDE MY DETAILED FINANCIAL INFORMATION. *I understand I will be assigned the appropriate enrollment priority based on nondisclosure of my financial information. By checking NO and signing below, I am agreeing to pay the applicable VA co-payment. Sign and date the application.*

IIC - PREVIOUS CALENDAR YEAR GROSS ANNUAL INCOME OF VETERAN, SPOUSE AND DEPENDENT CHILDREN

	VETERAN	SPOUSE	CHILDREN
1. WHAT WAS YOUR GROSS ANNUAL INCOME FROM EMPLOYMENT *(wages, bonuses, tips, etc.)* , AS WELL AS INCOME FROM YOUR FARM, RANCH, PROPERTY OR BUSINESS	$	$	$
2. LIST OTHER INCOME AMOUNTS *(Social Security, compensation, pension, interest, dividends) Exclude welfare.*	$	$	$
3. WAS INCOME FROM YOUR FARM, RANCH, PROPERTY OR BUSINESS *(If yes, refer to page 2, Section IIC of the instructions.)* ☐ YES ☐ NO			

IID - DEDUCTIBLE EXPENSES

1. NON-REIMBURSED MEDICAL EXPENSES PAID BY YOU OR YOUR SPOUSE *(payments for doctors, dentists, drugs, Medicare, health insurance, hospital and nursing home)*	$
2. AMOUNT YOU PAID LAST CALENDAR YEAR FOR FUNERAL AND BURIAL EXPENSES FOR YOUR DECEASED SPOUSE OR DEPENDENT CHILD *(Also enter spouse or child's information in Section IIA)*	$
3. AMOUNT YOU PAID LAST CALENDAR YEAR FOR YOUR COLLEGE OR VOCATIONAL EDUCATIONAL EXPENSES *(tuition, books, fees, materials, etc.) DO NOT LIST YOUR DEPENDENTS' EDUCATIONAL EXPENSES.*	$

IIE - NET WORTH

	VETERAN	SPOUSE
1. CASH, AMOUNT IN BANK ACCOUNTS *(Checking and savings accounts, certificates of deposit, individual retirement accounts, etc.)*	$	$
2. MARKET VALUE OF LAND AND BUILDINGS MINUS MORTGAGES AND LIENS. *Do not count your primary home. Include value of farm, ranch, or business assets.*	$	$
3. STOCKS AND BONDS AND VALUE OF OTHER PROPERTY OR ASSETS *(art, rare coins, etc.)* MINUS THE AMOUNT YOU OWE ON THESE ITEMS. *Exclude household effects and family vehicles.*	$	$

SECTION III - CONSENT AND SIGNATURE

CO-PAYMENT NOTICE: If you are a 0% service-connected noncompensable or a nonservice-connected veteran (and are not an Ex-POW, WWI veteran or VA pensioner) **and** your household income (or combined income and net worth) exceeds the established threshold, you may be eligible for enrollment only if you agree to pay VA co-payments for treatment of your NSC conditions. By signing this application you are agreeing to pay the applicable VA co-payment if required by law.

I CERTIFY THE FOREGOING STATEMENT(S) ARE TRUE AND CORRECT TO THE BEST OF MY KNOWLEDGE AND ABILITY.	DATE *(mm/dd/yyyy)*
SIGN HERE *(Signature of applicant or applicant's representative)*	

THE LAW PROVIDES SEVERE PENALTIES FOR WILLFUL SUBMISSION OF FALSE INFORMATION.

BILLING CODE 8320–01–C

(The Office of Management and Budget has approved the information collection requirements in this section under control number 2900–0091.)

Authority: 38 U.S.C. 101, 501, 1701, 1705, 1710, 1721, 1722.

4. A new § 17.37 is added to read as follows:

§ 17.37 Enrollment not required—provision of hospital and outpatient care to veterans.

Even if not enrolled in the VA healthcare system:

(a) A veteran rated for service-connected disabilities at 50 percent or greater will receive VA hospital and outpatient care provided for in the ''medical benefits package'' set forth in § 17.38.

(b) A veteran who has a service-connected disability will receive VA hospital and outpatient care provided for in the ''medical benefits package'' set forth in § 17.38 for that service-connected disability.

(c) A veteran who was discharged or released from active military service for a disability incurred or aggravated in the line of duty will receive VA hospital and outpatient care provided for in the ''medical benefits package'' set forth in § 17.38 for that disability for the 12-month period following discharge or release.

(d) When there is a compelling medical need to complete a course of VA treatment started when the veteran was enrolled in the VA healthcare system, a veteran will receive that treatment.

(e) Subject to the provisions of § 21.240, a veteran participating in VA's vocational rehabilitation program described in §§ 21.1 through 21.430 will receive VA hospital and outpatient care provided for in the ''medical benefits package'' set forth in § 17.38.

(f) A veteran may receive VA hospital and outpatient care based on factors other than veteran status (*e.g.*, a veteran who is a private-hospital patient and is referred to VA for a diagnostic test by that hospital under a sharing contract; a veteran who is a VA employee and is examined to determine physical or mental fitness to perform official duties; a Department of Defense retiree under a sharing agreement).

(g) For care not provided within a State, a veteran may receive VA hospital and outpatient care provided for in the ''medical benefits package'' set forth in § 17.38 if authorized under the provisions of 38 U.S.C. 1724 and 38 CFR 17.35.

(h) Commonwealth Army veterans and new Philippine Scouts may receive hospital and outpatient care provided for in the ''medical benefits package'' set forth in § 17.38 if authorized under the provisions of 38 U.S.C. 1724 and 38 CFR 17.35.

(i) A veteran may receive certain types of VA hospital and outpatient care not included in the ''medical benefits package'' set forth in § 17.38 if authorized by statute or other sections of 38 CFR (*e.g.*, humanitarian emergency care for which the individual will be billed, compensation and pension examinations, dental care, domiciliary care, nursing home care, readjustment counseling, care as part of a VA-approved research project, seeing-eye or guide dogs, sexual trauma counseling and treatment, special registry examinations).

(j) A veteran may receive an examination to determine whether the veteran is catastrophically disabled and therefore eligible for inclusion in priority category 4.

Authority: 38 U.S.C. 101, 501, 1701, 1705, 1710, 1721, 1722.

5. A new § 17.38 is added to read as follows:

§ 17.38 Medical benefits package.

(a) Subject to paragraphs (b) and (c) of this section, the following hospital and outpatient care constitutes the ''medical benefits package'' (basic care and preventive care):

(1) Basic care.

(i) Outpatient medical, surgical, and mental healthcare, including care for substance abuse.

(ii) Inpatient hospital, medical, surgical, and mental healthcare, including care for substance abuse.

(iii) Prescription drugs, including over-the-counter drugs and medical and surgical supplies available under the VA national formulary system.

(iv) Emergency care in VA facilities; and emergency care in non-VA facilities in accordance with sharing contracts or if authorized by §§ 17.52(a)(3), 17.53, 17.54, 17.120–132.

(v) Bereavement counseling as authorized in § 17.98.

(vi) Comprehensive rehabilitative services other than vocational services provided under 38 U.S.C. chapter 31.

(vii) Consultation, professional counseling, training, and mental health services for the members of the immediate family or legal guardian of the veteran or the individual in whose household the veteran certifies an intention to live, if needed to treat:

(A) The service-connected disability of a veteran; or

(B) The nonservice-connected disability of a veteran where these services were first given during the veteran's hospitalization and continuing them is essential to permit the veteran's release from inpatient care.

(viii) Durable medical equipment and prosthetic and orthotic devices, including eyeglasses and hearing aids as authorized under § 17.149.

(ix) Home health services authorized under 38 U.S.C. 1717 and 1720C.

(x) Reconstructive (plastic) surgery required as a result of disease or trauma, but not including cosmetic surgery that is not medically necessary.

(xi) Respite, hospice, and palliative care.

(xii) Payment of travel and travel expenses for veterans eligible under § 17.143 if authorized by that section.

(xiii) Pregnancy and delivery services, to the extent authorized by law.

(xiv) Completion of forms (*e.g.*, Family Medical Leave forms, life insurance applications, Department of Education forms for loan repayment exemptions based on disability, non-VA disability program forms) by healthcare professionals based on an examination or knowledge of the veteran's condition, but not including the completion of forms for examinations if a third party customarily will pay health care practitioners for the examination but will not pay VA.

(2) Preventive care, as defined in 38 U.S.C. 1701(9), which includes:

(i) Periodic medical exams.

(ii) Health education, including nutrition education.

(iii) Maintenance of drug-use profiles, drug monitoring, and drug use education.

(iv) Mental health and substance abuse preventive services.

(v) Immunizations against infectious disease.

(vi) Prevention of musculoskeletal deformity or other gradually developing disabilities of a metabolic or degenerative nature.

(vii) Genetic counseling concerning inheritance of genetically determined diseases.

(viii) Routine vision testing and eye-care services.

(ix) Periodic reexamination of members of high-risk groups for selected diseases and for functional decline of sensory organs, and the services to treat these diseases and functional declines.

(b) *Provision of the ''medical benefits package''.* Care referred to in the ''medical benefits package'' will be provided to individuals only if it is determined by appropriate healthcare professionals that the care is needed to promote, preserve, or restore the health of the individual and is in accord with generally accepted standards of medical practice.

(1) *Promote health.* Care is deemed to promote health if the care will enhance the quality of life or daily functional level of the veteran, identify a predisposition for development of a condition or early onset of disease which can be partly or totally ameliorated by monitoring or early diagnosis and treatment, and prevent future disease.

(2) *Preserve health.* Care is deemed to preserve health if the care will maintain the current quality of life or daily functional level of the veteran, prevent the progression of disease, cure disease, or extend life span.

(3) *Restoring health.* Care is deemed to restore health if the care will restore the quality of life or daily functional level that has been lost due to illness or injury.

(c) In addition to the care specifically excluded from the ''medical benefits package'' under paragraphs (a) and (b) of this section, the ''medical benefits package'' does not include the following:

(1) Abortions and abortion counseling.

(2) In vitro fertilization.

(3) Drugs, biologicals, and medical devices not approved by the Food and Drug Administration unless the treating medical facility is conducting formal clinical trials under an Investigational Device Exemption (IDE) or an Investigational New Drug (IND) application, or the drugs, biologicals, or medical devices are prescribed under a compassionate use exemption.

(4) Gender alterations.

(5) Hospital and outpatient care for a veteran who is either a patient or inmate in an institution of another government agency if that agency has a duty to give the care or services.

(6) Membership in spas and health clubs.

Authority: 38 U.S.C. 101, 501, 1701, 1705, 1710, 1721, 1722.

§ 17.43 [Amended]

6. In § 17.43, paragraph (a) is removed and paragraphs (b) through (e) are redesignated as paragraphs (a) through (d), respectively.

§ 17.47 [Amended]

7. In § 17.47, paragraph (h) is removed; paragraphs (i) through (l) are redesignated as paragraphs (h) through (k), respectively; and newly redesignated paragraph (h) is amended by removing ''hospital or'' and by removing ''or hospital care in a Federal hospital under agreement,''.

§ 17.93 [Amended]

8. In § 17.93, paragraph (a)(2) is amended by removing ''Medical services'' and adding, in its place, ''Subject to the provisions of §§ 17.36 through 17.38, medical services''.

§ 17.99 [Removed]

9. Section 17.99 is removed.

§ 17.100 [Amended]

10. In § 17.100, the third sentence is amended by removing ''a new application is filed, and''.

[FR Doc. 99–25871 Filed 10–5–99; 8:45 am]

BILLING CODE 8320–01–P

ENVIRONMENTAL PROTECTION AGENCY

40 CFR Part 180

[OPP–300927; FRL–6382–3]

RIN 2070–AB78

Imazapic-Ammonium; Pesticide Tolerances for Emergency Exemptions

AGENCY: Environmental Protection Agency (EPA).

ACTION: Final rule.

SUMMARY: This regulation establishes time-limited tolerances for combined residues of imazapic-ammonium, (+)-2-[4,5-dihydro-4-methyl-4-(1-methylethyl)-5-oxo-1*H*-imidazol-2- yl]-5-methyl-3-pyridinecarboxylic acid, applied as its ammonium salt and its metabolite (+)-2-[4,5-dihydro-4-methyl-4-(1-methylethyl)-5-oxo-1*H*-imidazol-2-yl]-5-hydromethyl-3- pyridinecarboxylic acid both free and conjugated in or on grass forage at 30 ppm; grass hay at 15 ppm; milk, fat, meat, meat byproducts (except kidney) of cattle, goats, hogs, horses, and sheep at 0.10 ppm; kidney of cattle, goats, hogs, horses, and sheep at 1 ppm. This action is in response to EPA's granting of emergency exemptions under section 18 of the Federal Insecticide, Fungicide, and Rodenticide Act authorizing use of the pesticide on pasture/rangeland and land in the Conservation Reserve Program. This regulation establishes a maximum permissible level for residues of imazapic-ammonium and its metabolite in these food commodities. The tolerances will expire and are revoked on December 31, 2001.

DATES: This regulation is effective October 6, 1999. Objections and requests for hearings, identified by docket control number OPP–300927, must be received by EPA on or before December 6, 1999.

ADDRESSES: Written objections and hearing requests may be submitted by mail, in person, or by courier. Please follow the detailed instructions for each method as provided in Unit VII. of the ''SUPPLEMENTARY INFORMATION'' section. To ensure proper receipt by EPA, your objections and hearing requests must identify docket control number OPP–300927 in the subject line on the first page of your response.

FOR FURTHER INFORMATION CONTACT: By mail: Libby Pemberton, Registration Division (7505C), Office of Pesticide Programs, Environmental Protection Agency, 401 M St., SW., Washington, DC 20460; telephone number: 703 308–9364; and e-mail address: pemberton.libby@epa.gov.

SUPPLEMENTARY INFORMATION:

I. General Information

A. Does This Action Apply to Me?

You may be potentially affected by this action if you are an agricultural producer, food manufacturer, or pesticide manufacturer. Potentially affected categories and entities may include, but are not limited to:

Categories	NAICS	Examples of Potentially Affected Entities
Industry	111 112 311 32532	Crop production Animal production Food manufacturing Pesticide manufacturing

This listing is not intended to be exhaustive, but rather provides a guide for readers regarding entities likely to be affected by this action. Other types of entities not listed in the table could also be affected. The North American Industrial Classification System (NAICS) codes have been provided to assist you and others in determining whether or not this action might apply to certain entities. If you have questions regarding the applicability of this action to a particular entity, consult the person listed in the ''FOR FURTHER INFORMATION CONTACT'' section.

B. How Can I Get Additional Information, Including Copies of This Document and Other Related Documents?

1. *Electronically.* You may obtain electronic copies of this document, and certain other related documents that might be available electronically, from the EPA Internet Home Page at http://www.epa.gov/. To access this document, on the Home Page select ''Laws and Regulations'' and then look up the entry for this document under the ''Federal Register- -Environmental Documents.'' You can also go directly to

the Federal Register listings at http://www.epa.gov/fedrgstr/.

2. *In person*. The Agency has established an official record for this action under docket control number OPP–300927. The official record consists of the documents specifically referenced in this action, and other information related to this action, including any information claimed as Confidential Business Information (CBI). This official record includes the documents that are physically located in the docket, as well as the documents that are referenced in those documents. The public version of the official record does not include any information claimed as CBI. The public version of the official record, which includes printed, paper versions of any electronic comments submitted during an applicable comment period is available for inspection in the Public Information and Records Integrity Branch (PIRIB), Rm. 119, Crystal Mall #2, 1921 Jefferson Davis Hwy., Arlington, VA, from 8:30 a.m. to 4 p.m., Monday through Friday, excluding legal holidays. The PIRIB telephone number is (703) 305-5805.

II. Background and Statutory Findings

EPA, on its own initiative, in accordance with sections 408 (l)(6) of the Federal Food, Drug, and Cosmetic Act (FFDCA), 21 U.S.C. 346a, is establishing tolerances for combined residues of the [herbicide] imazapic-ammonium and its metabolite both free and conjugated, in or on grass forage at 30 part per million (ppm); grass hay at 15 ppm; milk, fat, meat, meat byproducts (except kidney) of cattle, goats, hogs, horses, and sheep at 0.10 ppm; kidney of cattle, goats, hogs, horses, and sheep at 1 ppm. These tolerances will expire and are revoked on December 31, 2001. EPA will publish a document in the **Federal Register** to remove the revoked tolerances from the Code of Federal Regulations.

Section 408(l)(6) of the FFDCA requires EPA to establish a time-limited tolerance or exemption from the requirement for a tolerance for pesticide chemical residues in food that will result from the use of a pesticide under an emergency exemption granted by EPA under section 18 of FIFRA. Such tolerances can be established without providing notice or period for public comment.EPA does not intend for its actions on section 18 related tolerances to set binding precedents for the application of section 408 and the new safety standard to other tolerances and exemptions.

Section 408(b)(2)(A)(i) of the FFDCA allows EPA to establish a tolerance (the legal limit for a pesticide chemical residue in or on a food) only if EPA determines that the tolerance is ''safe.'' Section 408(b)(2)(A)(ii) defines ''safe'' to mean that ''there is a reasonable certainty that no harm will result from aggregate exposure to the pesticide chemical residue, including all anticipated dietary exposures and all other exposures for which there is reliable information.'' This includes exposure through drinking water and in residential settings, but does not include occupational exposure. Section 408(b)(2)(C) requires EPA to give special consideration to exposure of infants and children to the pesticide chemical residue in establishing a tolerance and to ''ensure that there is a reasonable certainty that no harm will result to infants and children from aggregate exposure to the pesticide chemical residue. . . .''

Section 18 of the Federal Insecticide, Fungicide, and Rodenticide Act (FIFRA) authorizes EPA to exempt any Federal or State agency from any provision of FIFRA, if EPA determines that ''emergency conditions exist which require such exemption.'' This provision was not amended by Food Quality Protection Act (FQPA). EPA has established regulations governing such emergency exemptions in 40 CFR part 166.

III. Emergency Exemptions for Imazapic-Ammonium on Pasture/Rangeland and Land in the Conservation Reserve Program and FFDCA Tolerances

The Applicant has stated that picloram can not be used in areas with sensitive desirable plants such as trees nor in areas with a shallow depth to groundwater; and high rates of 2,4-D have proven ineffective in controlling leafy spurge. Economic loss from the infestation of leafy spurge is measured in loss of livestock carrying capacity. It is estimated the potential economic loss will continue to average $5.5 million per year in Nebraska without the use of imazapic. EPA has authorized under FIFRA section 18 the use of imazapic-ammonium on pasture/rangeland and land in the Conservation Reserve Program for control of leafy spurge in Nebraska. After having reviewed the submission, EPA concurs that emergency conditions exist for this state.

As part of its assessment of these emergency exemptions, EPA assessed the potential risks presented by residues of (+)-2-[4,5-dihydro-4-methyl-4-(1-methylethyl)-5-oxo-1*H*- imidazol-2-yl]-5-methyl-3-pyridinecarboxylic acid applied as its ammonium salt and its metabolite (+)-2-[4,5-dihydro-4-methyl-4-(1-methylethyl)-5-oxo-1*H*-imidazol-2-yl]-5- hydromethyl-3-pyridinecarboxylic acid both free and conjugated in or on grass forage; grass hay; milk, fat, meat, meat byproducts (except kidney) of cattle, goats, hogs, horses, and sheep; and kidney of cattle, goats, hogs, horses, and sheep. In doing so, EPA considered the safety standard in FFDCA section 408(b)(2), and EPA decided that the necessary tolerance under FFDCA section 408(l)(6) would be consistent with the safety standard and with FIFRA section 18. Consistent with the need to move quickly on the emergency exemption in order to address an urgent non-routine situation and to ensure that the resulting food is safe and lawful, EPA is issuing these tolerances without notice and opportunity for public comment as provided in section 408(l)(6). Although these tolerances will expire and are revoked on December 31, 2001, under FFDCA section 408(l)(5), residues of the pesticide not in excess of the amounts specified in the tolerances remaining in or on grass forage; grass hay; milk, fat, meat, meat byproducts (except kidney) of cattle, goats, hogs, horses, and sheep; and kidney of cattle, goats, hogs, horses, and sheep after that date will not be unlawful, provided the pesticide is applied in a manner that was lawful under FIFRA, and the residues do not exceed a level that was authorized by these tolerances at the time of that application. EPA will take action to revoke these tolerances earlier if any experience with, scientific data on, or other relevant information on this pesticide indicate that the residues are not safe.

Because these tolerances are being approved under emergency conditions EPA has not made any decisions about whether imazapic-ammonium meets EPA's registration requirements for use on pasture/rangeland and land in the Conservation Reserve Program or whether permanent tolerances for this use would be appropriate. Under these circumstances, EPA does not believe that these tolerances serve as a basis for registration of imazapic-ammonium by a State for special local needs under FIFRA section 24(c). Nor do these tolerances serve as the basis for any State other than Nebraska to use this pesticide on these crops under section 18 of FIFRA without following all provisions of EPA's regulations implementing section 18 as identified in 40 CFR part 166. For additional information regarding the emergency exemptions for imazapic-ammonium, contact the Agency's Registration

Division at the address provided under the ''ADDRESSES'' section.

IV. Aggregate Risk Assessment and Determination of Safety

EPA performs a number of analyses to determine the risks from aggregate exposure to pesticide residues. For further discussion of the regulatory requirements of section 408 and a complete description of the risk assessment process, see the final rule on Bifenthrin Pesticide Tolerances (62 FR 62961, November 26, 1997) (FRL–5754–7) .

Consistent with section 408(b)(2)(D), EPA has reviewed the available scientific data and other relevant information in support of this action. EPA has sufficient data to assess the hazards of imazapic-ammonium and to make a determination on aggregate exposure, consistent with section 408(b)(2), for time-limited tolerances for combined residues of imazapic-ammonium and its metabolite both free and conjugated on grass forage at 30 ppm; grass hay at 15 ppm; milk, fat, meat, meat byproducts (except kidney) of cattle, goats, hogs, horses, and sheep at 0.10 ppm; and kidney of cattle, goats, hogs, horses, and sheep at 1 ppm. EPA's assessment of the dietary exposures and risks associated with establishing the tolerances follows.

A. Toxicological Profile

EPA has evaluated the available toxicity data and considered its validity, completeness, and reliability as well as the relationship of the results of the studies to human risk. EPA has also considered available information concerning the variability of the sensitivities of major identifiable subgroups of consumers, including infants and children. The nature of the toxic effects caused by imazapic-ammonium are discussed in this unit.

B. Toxicological Endpoint

1. *Acute toxicity*. For acute dietary risk assessment, the no-observed adverse effect level (NOAEL) of 175 milligrams/kilogram/day (mg/kg/day), based on developmental effects increased incidence of fetuses with rudimentary ribs at the lowest observed adverse effect level (LOAEL) of 350 mg/kg/day, from the developmental study in rabbits was used. Pregnant females 13+, is the population subgroup of concern. The acute dietary population adjusted dose (aPAD) is defined as the Reference Dose (RfD)/FQPA safety factor. The acute RfD of 1.75 mg/kg day is based on the developmental NOAEL of 175 mg/kg/day and the usual 100x uncertainty factor for intra- and inter-species differences and variations. The acute dietary aPAD is 0.175 mg/kg/day, based on the RfD of 1.75 mg/kg/day, and an additional uncertainty factor of 10x to account for potential pre- and post-natal toxicity and completeness of the data with respect to exposure and toxicity to infants and children (based on the determination of developmental effects below the level of maternal toxicity in the rabbit developmental study). There is no acute dietary aPAD for other population subgroups, including infants and children.

2. *Short- and intermediate-term toxicity*. For short-term margin of exposure (MOE) calculations, the developmental NOAEL of 175 mg/kg/day from the developmental study in rabbits was used. At the LOAEL of 350 mg/kg/day, there were increased rudimentary ribs below a level of maternal toxicity. The short term NOAEL can be used for both dermal and inhalation. An MOE of 100 is required for both dermal and inhalation exposure. For intermediate-term dermal exposures, the LOAEL of 137 mg/kg/day lowest dose tested (LDT) from the one year feeding study in dogs was used. At the LOAEL of 137 mg/kg/day, there was skeletal muscle degeneration in both sexes. The intermediate term LOAEL can be used for both dermal and inhalation exposures. An MOE of 300 is required for both dermal and inhalation exposure and is based on the usual 100x safety factor for intra- and inter-species differences and an addtional 3x safety factor for the absence of a NOAEL in the critical study.

3. *Chronic toxicity*. EPA has established the RfD for imazapic-ammonium at 0.5 mg/kg/day. This RfD is based on a one year feeding study in dogs with a LOAEL of 137 mg/kg/day (LDT) based on skeletal muscle degeneration. A NOAEL was not established in the study. An uncertainty factor of 3000x was recommended and was based on 10x for interspecies differences, 10x for intraspecies variations, 10x for infants and children, and 3x for absence of a NOAEL.

4. *Carcinogenicity*. Imazapic has been classified as a Group ''E'' (evidence of non- carcinogenicity for humans) chemical.

C. Exposures and Risks

1. *From food and feed uses*. Tolerances have been established (40 CFR 180.490) for the combined residues of imazapic-ammonium and its metabolite both free and conjugated, in or on peanut nutmeat at 0.1 ppm. Risk assessments were conducted by EPA to assess dietary exposures and risks from imazapic-ammonium as follows:

i. *Acute exposure and risk*. Acute dietary risk assessments are performed for a food-use pesticide if a toxicological study has indicated the possibility of an effect of concern occurring as a result of a 1-day or single exposure. The acute dietary (food only) risk assessment used the TMRC (theoretical maximum residue contribution). At the 95th percentile of exposure for user- days and per-capita days, the Tier 1 acute DEEM analysis predicts an exposure level of 0.000494 mg/kg/day for the females (13+, pregnant, not nursing) population subgroup, which is equivalent to 0.3% of the aPAD. This should be viewed as a conservative risk estimate; refinement using anticipated residue values and percent crop-treated data in conjunction with Monte Carlo analysis would result in a lower acute dietary exposure estimate.

ii. *Chronic exposure and risk*. In conducting the chronic dietary risk assessment, conservative assumptions — 100% of all commodities having imazapic tolerances will contain imazapic residues and those residues would be at the level of the tolerance — were used, which results in an overestimation of human dietary exposure. The existing imazapic tolerances (published and pending result in a Theoretical Maximum Residue Contribution (TMRC) that is equivalent to the following percentages of the RfD:

Subgroup	Percentage
U.S. Population (48 States).	0.5
Nursing Infants (<1 year old).	0.3
Non-Nursing Infants (<1 year old).	1.3
Children (1-6 years old)	1.4
Children (7-12 years old) ..	0.9
Hispanics	0.6
Males 13-19 yrs	0.6

The subgroups listed above are: (a) The U.S. population (48 states); (b) those for infants and children; and, (c) the other subgroups for which the percentage of the RfD occupied is greater than that occupied by the subgroup U.S. population (48 states).

2. *From drinking water*. Acute and chronic (56-day) DWECs (drinking water estimated concentration) for surface water were calculated by GENEEC (GENeric Expected Environmental Concentration) screening model to be 7.57 and 4.16 ppb, respectively. According to HED drinking water guidance (HED SOP 98.4) the 56-day GENEEC value may be divided by 3 to

obtain a value for chronic risk assessment calculations. Therefore, the Tier 1 chronic surface water value is 1.39 ppb. A ground water estimate was made using the SCI-GROW (Screening Concentration In GROund Water) screening model based on actual ground water monitoring data collected from small-scale prospective ground water monitoring studies for the registration of a number of pesticides that serve as benchmarks for the model. The DWEC for imazapic in ground water was calculated at 5.95 ppb. This concentration may be used for both the acute and chronic scenarios.

3. *From non-dietary exposure.* Imazapic-ammonium is not currently registered for sites that would result in non-dietary, non-occpational exposure. Therefore, such exposures are not expected and have not been included in this risk assessment.

4. *Cumulative exposure to substances with common mechanism of toxicity.* Imazapic is a member of the imidazolinone class of pesticides. Other members of this class include imazapyr, imazethapyr, imazaquin, and imazamethabenz-methyl. Section 408(b)(2)(D)(v) requires that, when considering whether to establish, modify, or revoke a tolerance, the Agency consider ''available information'' concerning the cumulative effects of a particular pesticide's residues and ''other substances that have a common mechanism of toxicity.''

EPA does not have, at this time, available data to determine whether imazapic-ammonium has a common mechanism of toxicity with other substances or how to include this pesticide in a cumulative risk assessment. Unlike other pesticides for which EPA has followed a cumulative risk approach based on a common mechanism of toxicity, imazapic-ammonium does not appear to produce a toxic metabolite produced by other substances. For the purposes of these tolerance actions, therefore, EPA has not assumed that imazapic-ammonium has a common mechanism of toxicity with other substances. For more information regarding EPA's efforts to determine which chemicals have a common mechanism of toxicity and to evaluate the cumulative effects of such chemicals, see the final rule for Bifenthrin Pesticide Tolerances (62 FR 62961, November 26, 1997).

D. Aggregate Risks and Determination of Safety for U.S. Population

1. *Acute risk.* For the population subgroup of concern, pregnant females 13+ years, the acute aggregate exposure includes food and water. For pregnant females, 13+, 0.3% of the aPAD is occupied by dietary (food) exposure. The estimated maximum concentrations of imazapic-ammonium in surface and ground water are less than the DWLOC for imazapic-ammonium in drinking water as a contribution to acute aggregate exposure. Therefore, EPA concludes with reasonable certainty that the acute aggregate risks resulting from residues of imazapic- ammonium in food and drinking water are below EPA's level of concern.

2. *Chronic risk.* For the U.S. population, 0.5% of the cPAD is occupied by dietary (food) exposure. Other highly exposed population subgroups include children 1-6 years (1.4% cPAD), hispanics (0.6% cPAD), pregnant females 13+ (0.4% cPAD) and males 13-19 years (0.6% cPAD). EPA generally has no concern for exposures below 100 percent of the cPAD, because the cPAD represents the level at or below which daily aggregate dietary exposure over a lifetime will not pose appreciable risks to human health. The estimated average concentrations of imazapic-ammonium in surface and ground water are less than the DWLOC for imazapic- ammonium in drinking water as a contribution to chronic aggregate exposure. Therefore, EPA concludes with reasonable certainty that the chronic aggregate risks resulting from residues of imazapic-ammonium in food and drinking water are below EPA's level of concern.

3. *Short- and intermediate-term risk.* Short- and intermediate-term aggregate exposure takes into account chronic dietary food and water (considered to be a background exposure level) plus indoor and outdoor non-dietary, non-occupational exposure. Since there are no registered uses for imazapic-ammonium that would result in such exposures, both short- and intermediate term aggregate risk assessments are not required.

4. *Aggregate cancer risk for U.S. population.* A cancer risk assessment was not conducted, since imazapic has been classified as a Group ''E'' non-carcinogenicity for humans based on a negative tumorigenic potential in two acceptable animal studies.

5. *Determination of safety.* Based on these risk assessments, EPA concludes that there is a reasonable certainty that no harm will result from aggregate exposure to imazapic- ammonium residues.

E. Aggregate Risks and Determination of Safety for Infants and Children

1. *Safety factor for infants and children*— i. *In general.* In assessing the potential for additional sensitivity of infants and children to residues of imazapic-ammonium, EPA considered data from developmental toxicity studies in the rat and rabbit and a 2-generation reproduction study in the rat. The developmental toxicity studies are designed to evaluate adverse effects on the developing organism resulting from maternal pesticide exposure during gestation. Reproduction studies provide information relating to effects from exposure to the pesticide on the reproductive capability of mating animals and data on systemic toxicity.

FFDCA section 408 provides that EPA shall apply an additional tenfold margin of safety for infants and children in the case of threshold effects to account for pre- and post-natal toxicity and the completeness of the data base unless EPA determines that a different margin of safety will be safe for infants and children. Margins of safety are incorporated into EPA risk assessments either directly through use of a MOE analysis or through using uncertainty (safety) factors in calculating a dose level that poses no appreciable risk to humans. EPA believes that reliable data support using the standard MOE and uncertainty factor (usually 100 for combined inter- and intra-species variability) and not the additional tenfold MOE/uncertainty factor when EPA has a complete data base under existing guidelines and when the severity of the effect in infants or children or the potency or unusual toxic properties of a compound do not raise concerns regarding the adequacy of the standard MOE/safety factor.

ii. *Developmental toxicity studies.* In the developmental study in rats, the maternal (systemic) NOAEL was 1,000 mg/kg/day highest dose tested (HDT). The developmental (fetal) NOAEL was 1,000 mg/kg/day (HDT).

In the developmental toxicity study in rabbits, the maternal (systemic) NOAEL was 350 mg/kg/day, based on decreased body weight and food consumption at the LOAEL of 500 mg/kg/day. The developmental (fetal) NOAEL was 175 mg/kg/day, based on increased incidence of rudimentary ribs at the LOAEL of 350 mg/kg/day.

iii. *Reproductive toxicity study.* In the 2-generation reproductive toxicity study in rats, the maternal (systemic) NOAEL was 1,484 mg/kg/day (HDT). The developmental (pup) NOAEL was 1,484 mg/kg/day (HDT). The reproductive NOAEL was 1,484 mg/kg/day (HDT).

iv. *Pre- and post-natal sensitivity.* The toxicological data base for evaluating pre- and post-natal toxicity for imazapic-ammonium is complete with respect to current data requirements. There appears to be extra-sensitivity

based on the pre-natal results in the rabbit developmental study. The developmental NOAEL was 175 mg/kg/day based on the increased incidence of rudimentary ribs at the LOAEL of 350 mg/kg/day. In contrast, the maternal NOAEL was 350 mg/kg/day based on decreased body weight and food consumption at the LOAEL of 500 mg/kg/day. Therefore, pre-natal developmental toxicity occurred at a dose level 350 mg/kg/day, which did not demonstrate any maternal toxicity. Based on the above, EPA concludes that reliable data support use of a 1,000-fold MOE/uncertainty factor to protect infants and children. Based on the conclusions of the rabbit developmental study, EPA used the FQPA Tier I approach which retains the 10X safety factor.

v. *Conclusion*. There is a complete toxicity database for imazapic-ammonium and exposure data is complete or is estimated based on data that reasonably accounts for potential exposures.

2. *Acute risk*. The aPAD only applies to pregnant females, 13+ and is not required for infants (<1 year), non-nursing infants, and children (1-6 years). For pregnant females, 13+, dietary exposure utilized 0.4% of the aPAD. The estimated average concentrations of imazapic- ammonium in surface and ground water are less than EPA's level of concern for imazapic- ammonium in drinking water as a contribution to acute aggregate exposure.

3. *Chronic risk*. The %cPAD utilized for chronic dietary exposure were 1.3% for non- nursing infants, 1.4% for children 1-6 years, and 1.0% for all infants (<1 year). The estimated average concentrations of imazapic-ammonium in surface and ground water are less than EPA's level of concern for imazapic-ammonium in drinking water as a contribution to chronic aggregate exposure.

4. *Short- or intermediate-term risk*. Since there are no registered uses for imazapic-ammonium which would result in non-dietary, non-occupational exposure, contributions to the aggregate risk from both short- and intermediate non-dietary exposures are not expected.

5. *Determination of safety*. Based on these risk assessments, EPA concludes that there is a reasonable certainty that no harm will result to infants and children from aggregate exposure to imazapic-ammonium residues.

V. Other Considerations

A. Metabolism in Plants and Animals

The nature of the residue in plants and livestock has been adequately defined for this time-limited tolerance. The residues of concern in grass are imazapic-ammonium and its hydroxymethyl metabolite, both free and conjugated. Based on the results of a goat metabolism study, the residues of concern in ruminants were identified as imazapic-ammonium and its hydroxymethyl metabolite. For the purposes of this time-limited tolerance only, the residues of concern in animals are imazapic and its hydroxymethyl metabolite.

B. Analytical Enforcement Methodology

An adequate analytical enforcement method is available to enforce the grass forage and hay tolerances for imazapic-ammonium and its hydroxymethyl metabolite. American Cyanamid Company submitted an Independent Laboratory Validation (ILV) of a Capillary Electrophoresis determinative method (Method M3114) for determination of residues in grass.

Adequate analytical enforcement methods are available to enforce the animal commodity tolerances for imazapic-ammonium and its hydroxymethyl metabolite. American Cyanamide Company submitted Independent Laboratory Validations (ILVs) of Capillary Electrophoresis determinative and LC/MS confirmatory methods (Methods M3118; M3222; and M3233) for determination of residues in milk; cattle muscle, kidney, and liver tissue; and bovine milk fat and tissue fat, respectively.

The methods may be requested from: Calvin Furlow, PRRIB, IRSD (7502C), Office of Pesticide Programs, Environmental Protection Agency, 401 M St., SW., Washington, DC 20460; telephone number: (703) 305-5229; e-mail address: furlow.calvin@epa.gov.

C. Magnitude of Residues

Residues of imazapic-ammonium and its hydroxymethyl metabolite, free and conjugated, are not expected to exceed 30 and 15 ppm in/on grass forage and hay, respectively, as a result of this emergency use. Secondary residues in animal commodities are not expected to exceed 0.10 ppm in milk, meat, fat, or meat byproducts (except kidney); or 1.0 ppm in kidney as a result of this emergency use. There are no processed food/feed items resulting from this emergency use.

D. International Residue Limits

There are no CODEX, Canadian, or Mexican maximum residue limits for imazapic on pastures/rangeland.

VI. Conclusion

Therefore, the tolerances are established for [combined residues] of imazapic- ammonium, (+)-2-[4,5-dihydro-4-methyl-4-(1-methylethyl)-5-oxo-1*H*-imidazol-2-yl]-5- methyl-3-pyridinecarboxylic acid, applied as its ammonium salt and its metabolite (+)-2-[4,5-dihydro-4-methyl-4-(1-methylethyl)-5-oxo-1*H*-imidazol-2-yl]-5-hydromethyl-3- pyridinecarboxylic acid both free and conjugated in grass forage at 30 ppm; grass hay at 15 ppm; milk, fat, meat, meat byproducts (except kidney) of cattle, goats, hogs, horses, and sheep at 0.10 ppm; and kidney of cattle, goats, hogs, horses, and sheep at 1 ppm.

VII. Objections and Hearing Requests

Under section 408(g) of the FFDCA, as amended by the FQPA, any person may file an objection to any aspect of this regulation and may also request a hearing on those objections. The EPA procedural regulations which govern the submission of objections and requests for hearings appear in 40 CFR part 178. Although the procedures in those regulations require some modification to reflect the amendments made to the FFDCA by the FQPA of 1996, EPA will continue to use those procedures, with appropriate adjustments, until the necessary modifications can be made. The new section 408(g) provides essentially the same process for persons to ''object'' to a regulation for an exemption from the requirement of a tolerance issued by EPA under new section 408(d), as was provided in the old FFDCA sections 408 and 409. However, the period for filing objections is now 60 days, rather than 30 days.

A. What Do I Need To Do To File an Objection or Request a Hearing?

You must file your objection or request a hearing on this regulation in accordance with the instructions provided in this unit and in 40 CFR part 178. To ensure proper receipt by EPA, you must identify docket control number OPP–300927 in the subject line on the first page of your submission. All requests must be in writing, and must be mailed or delivered to the Hearing Clerk on or before December 6, 1999.

1. *Filing the request*. Your objection must specify the specific provisions in the regulation that you object to, and the grounds for the objections (40 CFR 178.25). If a hearing is requested, the objections must include a statement of

the factual issues(s) on which a hearing is requested, the requestor's contentions on such issues, and a summary of any evidence relied upon by the objector (40 CFR 178.27). Information submitted in connection with an objection or hearing request may be claimed confidential by marking any part or all of that information as CBI. Information so marked will not be disclosed except in accordance with procedures set forth in 40 CFR part 2. A copy of the information that does not contain CBI must be submitted for inclusion in the public record. Information not marked confidential may be disclosed publicly by EPA without prior notice.

Mail your written request to: Office of the Hearing Clerk (1900), Environmental Protection Agency, 401 M St., SW., Washington, DC 20460. You may also deliver your request to the Office of the Hearing Clerk in Room M3708, Waterside Mall, 401 M St., SW., Washington, DC 20460. The Office of the Hearing Clerk is open from 8 a.m. to 4 p.m., Monday through Friday, excluding legal holidays. The telephone number for the Office of the Hearing Clerk is (202) 260-4865.

2. *Tolerance fee payment*. If you file an objection or request a hearing, you must also pay the fee prescribed by 40 CFR 180.33(i) or request a waiver of that fee pursuant to 40 CFR 180.33(m). You must mail the fee to: EPA Headquarters Accounting Operations Branch, Office of Pesticide Programs, P.O. Box 360277M, Pittsburgh, PA 15251. Please identify the fee submission be labeling it ''Tolerance Petition Fees.''

EPA is authorized to waive any fee requirement ''when in the judgement of the Administrator such a waiver or refund is equitable and not contrary to the purpose of this subsection.'' (cite). For additional information regarding the waiver of these fees, you may contact James Tompkins by phone at (703) 305-5697, by e-mail at tompkins.jim@epa.gov, or by mailing a request for information to Mr. Tompkins at Registration Division (7505C), Office of Pesticide Programs, Environmental Protection Agency, 401 M St., SW., Washington, DC 20460.

If you would like to request a waiver of the tolerance objection fees, you must mail your request for such a waiver to: James Hollins, Information Resources and Services Division (7502C), Office of Pesticide Programs, Environmental Protection Agency, 401 M St., SW., Washington, DC 20460.

3. *Copies for the Docket*. In addition to filing an objection or hearing request with the Hearing Clerk as described in Unit VII.A. of this preamble, you should also send a copy of your request to the PIRB for its inclusion in the official record that is described in Unit I.B.2. of this preamble. Mail your copies, identified by the docket number OPP–300927, to: Public Information and Records Integrity Branch, Information Resources and Services Division (7502C), Office of Pesticide Programs, Environmental Protection Agency, 401 M St., SW., Washington, DC 20460. In person or by courier, bring a copy to the location of the PRIB described in Unit I.B.2. of this preamble. You may also send an electronic copy of your request via e-mail to: opp-docket@epa.gov. Please use an ASCII file format and avoid the use of special characters and any form of encryption. Copies of electronic objections and hearing requests will also be accepted on disks in WordPerfect 5.1/6.1 file format or ASCII file format. Do not include any CBI in your electronic copy. You may also submit an electronic copy of your request at many Federal Depository Libraries.

B. When Will the Agency Grant a Request for a Hearing?

A request for a hearing will be granted if the Administrator determines that the material submitted shows the following: There is a genuine and substantial issue of fact; there is a reasonable possibility that available evidence identified by the requestor would, if established resolve one or more of such issues in favor of the requestor, taking into account uncontested claims or facts to the contrary; and resolution of the factual issues(s) in the manner sought by the requestor would be adequate to justify the action requested (40 CFR 178.32).

VIII. Regulatory Assessment Requirements

This final rule establishes a tolerance under section 408 of the FFDCA. The Office of Management and Budget (OMB) has exempted these types of actions from review under Executive Order 12866, entitled *Regulatory Planning and Review* (58 FR 51735, October 4, 1993). This final rule does not contain any information collections subject to OMB approval under the Paperwork Reduction Act (PRA), 44 U.S.C. 3501 *et seq.*, or impose any enforceable duty or contain any unfunded mandate as described under Title II of the Unfunded Mandates Reform Act of 1995 (UMRA) (Public Law 104-4). Nor does it require prior consultation with State, local, and tribal government officials as specified by Executive Order 12875, entitled *Enhancing the Intergovernmental Partnership* (58 FR 58093, October 28, 1993) and Executive Order 13084, entitled *Consultation and Coordination with Indian Tribal Governments* (63 FR 27655, May 19,1998), or special consideration of environmental justice related issues under Executive Order 12898, entitled *Federal Actions to Address Environmental Justice in Minority Populations and Low-Income Populations* (59 FR 7629, February 16, 1994) or require OMB review in accordance with Executive Order 13045, entitled *Protection of Children from Environmental Health Risks and Safety Risks* (62 FR 19885, April 23, 1997). The Agency has determined that this action will not have a substantial direct effect on States, on the relationship between the national government and the States, or on the distribution of power and responsibilities among the various levels of government, as specified in Executive Order 12612, entitled *Federalism* (52 FR 41685, October 30, 1987). This action directly regulates growers, food processors, food handlers and food retailers, not States. This action does not alter the relationships or distribution of power and responsibilities established by Congress in the preemption provisions of the Federal Food Drug Cosmetic Act, 21 U.S.C. section 346a(b)(4). This action does not involve any technical standards that would require Agency consideration of voluntary consensus standards pursuant to section 12(d) of the National Technology Transfer and Advancement Act of 1995 (NTTAA), Public Law 104-113, section 12(d) (15 U.S.C. 272 note). In addition, since tolerances and exemptions that are established under FFDCA section 408(l)(6), such as the tolerance in this final rule, do not require the issuance of a proposed rule, the requirements of the Regulatory Flexibility Act (RFA) (5 U.S.C. 601 *et seq.*) do not apply.

IX. Submission to Congress and the Comptroller General

The Congressional Review Act, 5 U.S.C. 801 *et seq.*, as added by the Small Business Regulatory Enforcement Fairness Act of 1996, generally provides that before a rule may take effect, the agency promulgating the rule must submit a rule report, which includes a copy of the rule, to each House of the Congress and to the Comptroller General of the United States. EPA will submit a report containing this rule and other required information to the U.S. Senate, the U.S. House of Representatives, and the Comptroller General of the United States prior to publication of this rule in the **Federal Register**. This rule is not a ''major rule'' as defined by 5 U.S.C. 804(2).

List of Subjects in 40 CFR Part 180

Environmental protection, Administrative practice and procedure, Agricultural commodities, Pesticides and pests, Reporting and recordkeeping requirements.

Dated: September 23, 1999.

James Jones,

Director, Registration Division, Office of Pesticide Programs.

Therefore, 40 CFR chapter I is amended as follows:

PART 180—[AMENDED]

1. The authority citation for part 180 continues to read as follows:

Authority: 21 U.S.C. 321(q), 346(a), and 371.

2. Section 180.490 is revised to read as follows:

§ 180.490 Imazapic-ammonium; tolerances for residues.

(a) *General.* Tolerance is established for residues of the herbicide; (+)-2-[4,5-dihydro-4-methyl-4-(1-methylethyl)-5-oxo-1*H*-imidazol-2-yl]-5-methyl-3-pyridinecarboxylic acid applied as its ammonium salt and its metabolite (+)-2-[4,5-dihydro-4-methyl-4-(1-methylethyl)-5-oxo-1*H*-imidazol-2-yl]-5-hydromethyl-3-pyridinecarboxylic acid both free and conjugated; in or on the following food commodity:

Commodities	Parts per million
Peanut nutmeat	0.1

(b) *Section 18 emergency exemptions.* Time-limited tolerances are established for combined residues of the herbicide imazapic-ammonium, (+)-2-[4,5-dihydro-4-methyl-4-(1- methylethyl)-5-oxo-1*H*-imidazol-2-yl]-5-methyl-3-pyridinecarboxylic acid, applied as its ammonium salt and its metabolite (+)-2-[4,5-dihydro-4-methyl-4-(1-methylethyl)-5-oxo-1*H*- imidazol-2-yl]-5-hydromethyl-3-pyridinecarboxylic acid both free and conjugated in connection with use of the pesticide under section 18 emergency exemptions granted by EPA. The tolerances are specified in the table.

Commodity	Parts per million	Expiration/ revocation date
Cattle, fat	0.10	12/31/01
Cattle, kidney ..	1.0	12/31/01
Cattle, mbyp (except kidney).	0.1	12/31/01
Cattle, meat	0.1	12/31/01
Goats, fat	0.1	12/31/01
Goats, kidney ..	1.0	12/31/01
Goats, mbyp (except kidney).	0.1	12/31/01
Goats, meat	0.1	12/31/01
Grass, forage ..	30	12/31/01
Grass, hay	15	12/31/01
Hogs, fat	0.1	12/31/01
Hogs, kidney ...	1.0	12/31/01
Hogs, mbyp (except kidney).	0.1	12/31/01
Hogs, meat	0.1	12/31/01
Horses, fat	0.1	12/31/01
Horses, kidney	1.0	12/31/01
Horses, mbyp (except kidney).	0.1	12/31/01
Horses, meat ...	0.1	12/31/01
Sheep, fat	0.1	12/31/01
Sheep, kidney	1.0	12/31/01
Sheep, mbyp (except kidney).	0.1	12/31/01
Sheep, meat	0.1	12/31/01

(c) *Tolerances with reginal registrations.* [Reserved]

(d) *Indirect or inadvertent residues. [Reserved]*

[FR Doc. 99–25842 Filed 10–5–99; 8:45 am]

BILLING CODE 6560–50–F

FEDERAL COMMUNICATIONS COMMISSION

47 CFR Part 73

[DA 99–1837; MM Docket No. 99–170; RM–9545]

Radio Broadcasting Services; Oceanside and Encinitas, CA

AGENCY: Federal Communications Commission.

ACTION: Final rule.

SUMMARY: This document reallots Channel 271B from Oceanside to Encinitas, California, as that community's first local aural transmission service and modifies the license for Station KXST(FM), a pre-1964 grandfathered facility, as requested, pursuant to the provisions of section 1.420(i) of the Commission's Rules. *See* 64 FR 28427, May 26, 1999. Coordinates used for Channel 271B at Encinitas are the currently authorized site for Station KXST(FM) at 33–06–40 NL and 117–12–05 WL. At that site, Station KXST(FM) will remain short spaced to pre-1964 grandfathered Station KSCA(FM), Channel 270B, Glendale, California, but will not result in an increase in interference potential to other stations as no technical changes for Station KXST(FM) are involved. A previously referenced short spacing to pre-1964 grandfathered Station KGB–FM, Channel 268B, San Diego, California, is not a consideration as the Commission has eliminated the distance separation requirements and interference protection requirements with respect to second and third adjacent channel grandfathered stations that have existed continuously since November 16, 1964. *See* Grandfathered Short-Spaced FM Stations, 62 FR 187, September 26, 1977. As Encinitas is located within 320 kilometers (199 miles) of the U.S.-Mexico border, the Mexican government will be notified of the technical changes to the FM Table of Allotments to reflect the reallotment of Channel 271B from Oceanside to Encinitas. With this action, the proceeding is terminated.

DATES: Effective October 25, 1999.

FOR FURTHER INFORMATION CONTACT: Nancy Joyner, Mass Media Bureau, (202) 418–2180.

SUPPLEMENTARY INFORMATION: This is a synopsis of the Commission's Report and Order, MM Docket No. 99–170, adopted September 1, 1999, and released September 10, 1999. The full text of this Commission decision is available for inspection and copying during normal business hours in the FCC's Reference Center (Room CY–A257), 445 Twelfth Street, SW., Washington, DC. The complete text of this decision may also be purchased from the Commission's copy contractor, International Transcription Service, Inc., 1231 20th Street, NW., Washington, DC 20036, (202) 857–3800.

List of Subjects in 47 CFR Part 73

Radio broadcasting.

Part 73 of Title 47 of the Code of Federal Regulations is amended as follows:

47 CFR PART 73—[AMENDED]

1. The authority citation for part 73 continues to read as follows:

Authority: 47 U.S.C. 154, 303, 334, 336.

§ 73.202 [Amended]

2. Section 73.202(b), the Table of FM Allotments under California is amended by adding Encinitas, Channel 271B.

3. Section 73.202(b), the Table of FM Allotments under California, is

amended, by removing Channel 271B at Oceanside.

Federal Communications Commission.

John A. Karousos,

Chief, Allocations Branch, Policy and Rules Division, Mass Media Bureau.

[FR Doc. 99–25891 Filed 10–5–99; 8:45 am]

BILLING CODE 6712–01–P

FEDERAL COMMUNICATIONS COMMISSION

47 CFR Part 73

[DA 99–1947; MM Docket No. 98–207; RM–9408, RM–9497]

Radio Broadcasting Services; Wellsville and Canaseraga, NY

AGENCY: Federal Communications Commission.

ACTION: Final rule.

SUMMARY: The Commission, at the request of RP Communications, allots Channel 228A to Wellsville, NY, as the community's second local FM and third local aural service. *See* 63 FR 68425, December 11, 1998. At the request of RJ Communications, the Commission allots Channel 246A to Canaseraga, NY, as the community's first local aural service. Channel 228A can be allotted to Wellsville in compliance with the Commission's minimum distance separation requirements with a site restriction of 2 kilometers (1.2 miles) west, at coordinates 42–07–25 NL; 77–55–29 WL, to avoid a short-spacing to Station WWSE, Channel 227B, Jamestown, New York. Channel 246A can be allotted to Canaseraga in compliance with the Commission's minimum distance separation requirements with a site restriction of 10.6 kilometers (6.6 miles) south of Canaseraga, at coordinates 42–21–41 NL; 77–45–09 WL, to avoid a short-spacing to Station WGRF, Channel 245B, Buffalo, New York. Canadian concurrence in both allotments have been obtained since each community is located within 320 kilometers (200 miles) of the U.S.-Canadian border. The allotment of Channel 246A at Canaseraga has been concurred in as a specially negotiated short-spaced allotment. With this action, this proceeding is terminated.

DATES: Effective November 8, 1999. A filing window for Channel 246A at Canaseraga, NY, and Channel 228A at Wellsville, NY, will not be opened at this time. Instead, the issue of opening a filing window for these channels will be addressed by the Commission in a subsequent order.

FOR FURTHER INFORMATION CONTACT: Leslie K. Shapiro, Mass Media Bureau, (202) 418–2180.

SUPPLEMENTARY INFORMATION: This is a synopsis of the Commission's Report and Order, MM Docket No. 98–207, adopted September 15, 1999, and released September 24, 1999. The full text of this Commission decision is available for inspection and copying during normal business hours in the FCC Reference Center (Room 239), 445 12th Street, SW, Washington, DC. The complete text of this decision may also be purchased from the Commission's copy contractor, International Transcription Services, Inc., (202) 857–3800, 1231 20th Street, NW, Washington, DC 20036.

List of Subjects in 47 CFR Part 73

Radio broadcasting.

Part 73 of Title 47 of the Code of Federal Regulations is amended as follows:

PART 73—[AMENDED]

1. The authority citation for Part 73 continues to read as follows:

Authority: 47 U.S.C. 154, 303, 334. 336.

§ 73.202 [Amended]

2. Section 73.202(b), the Table of FM Allotments under New York, is amended by adding Canaseraga, Channel 246A and adding Channel 228A at Wellsville.

Federal Communications Commission.

John A. Karousos,

Chief, Allocations Branch, Policy and Rules Division, Mass Media Bureau.

[FR Doc. 99–25889 Filed 10–5–99; 8:45 am]

BILLING CODE 6712–01–P

FEDERAL COMMUNICATIONS COMMISSION

47 CFR Part 73

[MM Docket Nos. 91–221, 87–8; FCC 99–209]

Review of the Commission's Regulations Governing Television Broadcasting

AGENCY: Federal Communications Commission.

ACTION: Final rule; announcement of effective date of filing requirements.

SUMMARY: This rule announces the effective date of filing requirements in the preamble of the final rule on local broadcast ownership rules published on September 17, 1999. Applicants will be required to file with the Commission upon the effective date of the rules (November 16, 1999) to convert conditional waivers to permanent license grants under the new rules or waiver standards. In addition, licensees with existing local marketing agreements (LMA) that are attributable under the revised rules will be required to file a copy of the LMA with the Commission on or before October 18, 1999.

DATES: The conditional waiver filing requirement in paragraph 72 of the preamble to the final rule published at 64 FR 50651 (September 17, 1999) is effective on November 16, 1999. The LMA filing requirement in paragraph 89 of the same preamble is effective on October 18, 1999.

FOR FURTHER INFORMATION CONTACT: Eric Bash, Mass Media Bureau, (202) 418–2130.

SUPPLEMENTARY INFORMATION: On August 27, 1999 the Office of Management and Budget (''OMB'') approved the filing requirements pursuant to OMB Control No. 3060–0904. Accordingly, the requirements will be effective as noted above.

List of Subjects in 47 CFR Part 73

Television broadcasting.

Federal Communications Commission.

Magalie Roman Salas,

Secretary.

[FR Doc. 99–25451 Filed 10–5–99; 8:45 am]

BILLING CODE 6712–01–P

DEPARTMENT OF COMMERCE

National Oceanic and Atmospheric Administration

50 CFR Part 679

[Docket No. 990304063–9063–01; I.D. 092499L]

Fisheries of the Exclusive Economic Zone Off Alaska; Pacific Cod by Catcher Processors Using Trawl Gear in the Bering Sea and Aleutian Islands

AGENCY: National Marine Fisheries Service (NMFS), National Oceanic and Atmospheric Administration (NOAA), Commerce.

ACTION: Modification of a closure.

SUMMARY: NMFS is opening directed fishing for Pacific cod by catcher processor vessels using trawl gear in the Bering Sea and Aleutian Islands management area (BSAI). This action is necessary to fully utilize the portion of the 1999 total allowable catch (TAC) of Pacific cod allocated to these vessels in this area.

DATES: Effective 1200 hours, Alaska local time (A.l.t.), October 1, 1999, until

2400 hrs. A.l.t., December 31, 1999, or until NMFS publishes further notice in the **Federal Register**.

FOR FURTHER INFORMATION CONTACT: Andrew Smoker, 907–586–7228.

SUPPLEMENTARY INFORMATION: NMFS manages the groundfish fishery in the BSAI according to the Fishery Management Plan for the Groundfish Fishery of the Bering Sea and Aleutian Islands Area (FMP) prepared by the North Pacific Fishery Management Council under authority of the Magnuson-Stevens Fishery Conservation and Management Act. Regulations governing fishing by U.S. vessels in accordance with the FMP appear at subpart H of 50 CFR part 600 and 50 CFR part 679.

The Final 1999 Harvest Specifications of Groundfish for the BSAI (64 FR 12103, March 11, 1999) established the portion of the TAC of Pacific cod allocated to catcher processors using trawl gear in the BSAI as 38,475 metric tons (mt). See § 679.20(c)(3)(iii) and § 679.20(a)(7)(i)(B).

In order to reserve amounts anticipated to be needed for incidental catch in other fisheries, on May 6, 1999, the Regional Administrator, Alaska Region, NMFS (Regional Administrator) established a directed fishing allowance of 14,000 mt; set aside the remaining 24,475 mt as bycatch to support other anticipated groundfish fisheries; and closed the directed fishery for Pacific cod by catcher processors using trawl gear in the BSAI under § 679.20(d)(1)(iii) (64 FR 25216, May 11, 1999).

On September 24, 1999, in accordance with § 679.20(a)(7)(ii)(B), NMFS determined that halibut bycatch restrictions will prevent catcher processors using trawl gear from harvesting their full allocation; apportioned the projected unused amount, 5,000 mt, of Pacific cod from trawl catcher/processors to vessels using hook-and-line or pot gear; and specified the trawl catcher/processors apportionment of Pacific cod as 33,475 mt.

NMFS estimated that as of September 24, 1999, approximately 6,000 mt remain in the portion of the TAC of Pacific cod allocated to catcher processors using trawl gear in the BSAI and of that amount, 5,000 mt will be necessary as bycatch to support other anticipated groundfish fisheries through the end of 1999. Therefore, based on the realized catch of Pacific cod in other trawl catcher processor groundfish fisheries during 1999 and Pacific halibut bycatch restrictions on the trawl fleet, the Regional Administrator is establishing a revised directed fishing allowance of 16,661 mt, and is setting aside the remaining 16,814 mt as bycatch to support other anticipated groundfish fisheries. NMFS has determined that 1,000 mt remain in the directed fishing allowance. Therefore, NMFS is terminating the previous closure and is opening directed fishing for Pacific cod by catcher processors using trawl gear in the BSAI.

Classification

All other closures remain in full force and effect. This action responds to the best available information recently obtained from the fishery. It must be implemented immediately in order to allow full utilization of the Pacific cod TAC. Providing prior notice and opportunity for public comment for this action is impracticable and contrary to the public interest. Further delay would only disrupt the FMP objective of providing the Pacific cod TAC for harvest. NMFS finds for good cause that the implementation of this action cannot be delayed for 30 days. Accordingly, under 5 U.S.C. 553(d), a delay in the effective date is hereby waived.

This action is required by § 679.20 and is exempt from review under E.O. 12866.

Authority: 16 U.S.C. 1801 *et seq.*

Dated: September 30, 1999,

Bruce C. Morehead,

Acting Director, Office of Sustainable Fisheries, National Marine Fisheries Service.

[FR Doc. 99–25882 Filed 9–30–99; 4:53 pm]

BILLING CODE 3510–22–F

Proposed Rules

Federal Register
Vol. 64, No. 193
Wednesday, October 6, 1999

This section of the FEDERAL REGISTER contains notices to the public of the proposed issuance of rules and regulations. The purpose of these notices is to give interested persons an opportunity to participate in the rule making prior to the adoption of the final rules.

DEPARTMENT OF TRANSPORTATION

Federal Aviation Administration

14 CFR Part 39

[Docket No. 99–NM–57–AD]

RIN 2120–AA64

Airworthiness Directives; Boeing Model 757–200 and –200PF Series Airplanes

AGENCY: Federal Aviation Administration, DOT.

ACTION: Notice of proposed rulemaking (NPRM).

SUMMARY: This document proposes the adoption of a new airworthiness directive (AD) that is applicable to certain Boeing Model 757–200 and –200PF series airplanes. This proposal would require repetitive detailed visual inspections to detect loose fuse pins in the outboard beam attachment and forward trunnion support on the main landing gear (MLG) and to detect corrosion on the structure adjacent to the fuse pin; and corrective actions, if necessary. This proposal also would require eventual replacement of the fuse pins with new corrosion resistant steel (CRES) fuse pins, which would constitute terminating action for the repetitive inspections. This proposal is prompted by a report of damaged fuse pins caused by corrosion. The actions specified by the proposed AD are intended to prevent corroded fuse pins, which could result in the MLG separating from the wing, and consequent damage to the airplane and possible rupture of the wing fuel tank.

DATES: Comments must be received by November 22, 1999.

ADDRESSES: Submit comments in triplicate to the Federal Aviation Administration (FAA), Transport Airplane Directorate, ANM–114, Attention: Rules Docket No. 99–NM–57–AD, 1601 Lind Avenue, SW., Renton, Washington 98055–4056. Comments may be inspected at this location between 9:00 a.m. and 3:00 p.m., Monday through Friday, except Federal holidays.

The service information referenced in the proposed rule may be obtained from Boeing Commercial Airplane Group, P.O. Box 3707, Seattle, Washington 98124–2207. This information may be examined at the FAA, Transport Airplane Directorate, 1601 Lind Avenue, SW., Renton, Washington.

FOR FURTHER INFORMATION CONTACT: Rick Kawaguchi, Aerospace Engineer, Airframe Branch, ANM–120S, FAA, Transport Airplane Directorate, Seattle Aircraft Certification Office, 1601 Lind Avenue, SW., Renton, Washington 98055–4056; telephone (425) 227–1153; fax (425) 227–1181.

SUPPLEMENTARY INFORMATION:

Comments Invited

Interested persons are invited to participate in the making of the proposed rule by submitting such written data, views, or arguments as they may desire. Communications shall identify the Rules Docket number and be submitted in triplicate to the address specified above. All communications received on or before the closing date for comments, specified above, will be considered before taking action on the proposed rule. The proposals contained in this notice may be changed in light of the comments received.

Comments are specifically invited on the overall regulatory, economic, environmental, and energy aspects of the proposed rule. All comments submitted will be available, both before and after the closing date for comments, in the Rules Docket for examination by interested persons. A report summarizing each FAA-public contact concerned with the substance of this proposal will be filed in the Rules Docket.

Commenters wishing the FAA to acknowledge receipt of their comments submitted in response to this notice must submit a self-addressed, stamped postcard on which the following statement is made: ''Comments to Docket Number 99–NM–57–AD.'' The postcard will be date stamped and returned to the commenter.

Availability of NPRMs

Any person may obtain a copy of this NPRM by submitting a request to the FAA, Transport Airplane Directorate, ANM–114, Attention: Rules Docket No. 99–NM–57–AD, 1601 Lind Avenue, SW., Renton, Washington 98055–4056.

Discussion

The FAA has received a report indicating that, during heavy maintenance of several Boeing Model 757–200 series airplanes, 28 fuse pins were found damaged due to corrosion. Fuse pins made from 4330M and 4340 alloy with cracks in the chrome plating can be damaged by corrosion. Such corrosion or cracking, if not corrected, could result in the main landing gear (MLG) separating from the wing, and consequent damage to the airplane and possible rupture of the wing fuel tank.

The subject fuse pins on Boeing Model 757–200PF series airplanes are identical to those on the affected Boeing Model 757–200 series airplanes. Therefore, both of these airplanes may be subjected to the same unsafe condition.

Explanation of Relevant Service Information

The FAA has reviewed and approved Boeing Alert Service Bulletin 757–57A0054, dated November 5, 1998, which describes procedures for repetitive detailed visual inspections to detect loose fuse pins in the outboard beam attachment and forward trunnion support on the MLG and corrosion on the structure adjacent to the fuse pin; and corrective actions, if necessary. The corrective actions involve performing a detailed visual inspection to detect corrosion on the fuse pin's mating parts, and repairing the parts, if necessary; performing a detailed visual inspection to detect cracks on the outer surface of the fuse pin chrome plating; and replacing the alloy steel fuse pins with new corrosion resistant steel (CRES) fuse pins, which would eliminate the need for the repetitive inspections. The service bulletin also describes procedures for a terminating action for the repetitive inspections. Accomplishment of the action specified in the service bulletin is intended to adequately address the identified unsafe condition.

Explanation of Requirements of Proposed Rule

Since an unsafe condition has been identified that is likely to exist or develop on other products of this same type design, the proposed AD would require accomplishment of the actions

specified in the service bulletin described previously.

Cost Impact

There are approximately 805 airplanes of the affected design in the worldwide fleet. The FAA estimates that 350 airplanes of U.S. registry would be affected by this proposed AD.

It would take approximately 1 work hour per airplane to accomplish the proposed inspection, at an average labor rate of $60 per work hour. Based on these figures, the cost impact of the inspection proposed by this AD on U.S. operators is estimated to be $21,000, or $60 per airplane, per inspection cycle.

It would take approximately 440 work hours per airplane to accomplish the proposed replacement, at an average labor rate of $60 per work hour. The manufacturer has committed previously to its customers that it will bear the cost of replacement parts. As a result, the cost of those parts are not attributable to this proposed AD. Based on these figures, the cost impact of the proposed AD on U.S. operators is estimated to be $9,240,000, or $26,400 per airplane.

The cost impact figures discussed above are based on assumptions that no operator has yet accomplished any of the proposed requirements of this AD action, and that no operator would accomplish those actions in the future if this AD were not adopted.

Regulatory Impact

The regulations proposed herein would not have substantial direct effects on the States, on the relationship between the national government and the States, or on the distribution of power and responsibilities among the various levels of government. Therefore, in accordance with Executive Order 12612, it is determined that this proposal would not have sufficient federalism implications to warrant the preparation of a Federalism Assessment.

For the reasons discussed above, I certify that this proposed regulation (1) is not a ''significant regulatory action'' under Executive Order 12866; (2) is not a ''significant rule'' under the DOT Regulatory Policies and Procedures (44 FR 11034, February 26, 1979); and (3) if promulgated, will not have a significant economic impact, positive or negative, on a substantial number of small entities under the criteria of the Regulatory Flexibility Act. A copy of the draft regulatory evaluation prepared for this action is contained in the Rules Docket. A copy of it may be obtained by contacting the Rules Docket at the location provided under the caption **ADDRESSES.**

List of Subjects in 14 CFR Part 39

Air transportation, Aircraft, Aviation safety, Safety.

The Proposed Amendment

Accordingly, pursuant to the authority delegated to me by the Administrator, the Federal Aviation Administration proposes to amend part 39 of the Federal Aviation Regulations (14 CFR part 39) as follows:

PART 39—AIRWORTHINESS DIRECTIVES

1. The authority citation for part 39 continues to read as follows:

Authority: 49 U.S.C. 106(g), 40113, 44701.

§ 39.13 [Amended]

2. Section 39.13 is amended by adding the following new airworthiness directive:

Boeing: Docket 99–NM–57–AD.

Applicability: Model 757–200 and –200PF series airplanes, line numbers 1 through 806 inclusive; certificated in any category.

Note 1: This AD applies to each airplane identified in the preceding applicability provision, regardless of whether it has been modified, altered, or repaired in the area subject to the requirements of this AD. For airplanes that have been modified, altered, or repaired so that the performance of the requirements of this AD is affected, the owner/operator must request approval for an alternative method of compliance in accordance with paragraph (d) of this AD. The request should include an assessment of the effect of the modification, alteration, or repair on the unsafe condition addressed by this AD; and, if the unsafe condition has not been eliminated, the request should include specific proposed actions to address it.

Compliance: Required as indicated, unless accomplished previously.

To prevent corroded fuse pins, which could result in the main landing gear (MLG) separating from the wing, and consequent damage to the airplane and possible rupture of the wing fuel tank, accomplish the following:

Repetitive Inspections

(a) Perform a detailed visual inspection to detect loose fuse pins in the outboard beam attachment and forward trunnion support on the MLG and to detect corrosion on the structure adjacent to the fuse pin, in accordance with Boeing Alert Service Bulletin 757–57A0054, dated November 5, 1998; at the later of the times specified in paragraphs (a)(1) and (a)(2) of this AD. Thereafter, repeat the inspection at intervals not to exceed 3,000 flight cycles or 24 months, whichever occurs first, until accomplishment of paragraph (c) of this AD.

(1) Prior to 4 years since date of manufacture of the airplane; or

(2) Within 3,000 flight cycles or 24 months after the effective date of this AD, whichever occurs first.

Note 2: For the purposes of this AD, a detailed visual inspection is defined as: ''An intensive visual examination of a specific structural area, system, installation, or assembly to detect damage, failure, or irregularity. Available lighting is normally supplemented with a direct source of good lighting at intensity deemed appropriate by the inspector. Inspection aids such as mirror, magnifying lenses, etc., may be used. Surface cleaning and elaborate access procedures may be required.''

Corrective Action

(b) If any loose fuse pin or corrosion on the structure adjacent to the fuse pin is detected during any inspection required by paragraph (a) of this AD, prior to further flight, perform the applicable corrective action [i.e., detailed visual inspections for cracks or corrosion, repair of discrepant parts, and replacement of fuse pin] in accordance with Boeing Alert Service Bulletin 757–57A0054, dated November 5, 1998. Replacement of an alloy steel fuse pin with a new corrosion resistant steel (CRES) fuse pin constitutes terminating action for the repetitive inspection requirements of paragraph (a) of this AD for that fuse pin only.

Terminating Action

(c) At the next scheduled MLG overhaul, or within 12 years after the effective date of this AD, whichever occurs first, replace all alloy steel fuse pins with new CRES fuse pins in the outboard beam attachment and forward trunnion support on the MLG in accordance with Boeing Alert Service Bulletin 757–57A0054, dated November 5, 1998. Accomplishment of the action specified in this paragraph constitutes terminating action for the repetitive inspection requirements of this AD.

Alternative Methods of Compliance

(d) An alternative method of compliance or adjustment of the compliance time that provides an acceptable level of safety may be used if approved by the Manager, Seattle Aircraft Certification Office (ACO), FAA, Transport Airplane Directorate. Operators shall submit their requests through an appropriate FAA Principal Maintenance Inspector, who may add comments and then send it to the Manager, Seattle ACO.

Note 3: Information concerning the existence of approved alternative methods of compliance with this AD, if any, may be obtained from the Seattle ACO.

Special Flight Permits

(e) Special flight permits may be issued in accordance with sections 21.197 and 21.199 of the Federal Aviation Regulations (14 CFR 21.197 and 21.199) to operate the airplane to a location where the requirements of this AD can be accomplished.

Issued in Renton, Washington, on September 29, 1999.

D.L. Riggin,

Acting Manager, Transport Airplane Directorate, Aircraft Certification Service.

[FR Doc. 99–25936 Filed 10–5–99; 8:45 am]

BILLING CODE 4910–13–U

DEPARTMENT OF TRANSPORTATION

Federal Aviation Administration

14 CFR Part 39

[Docket No. 99–NM–248–AD]

RIN 2120–AA64

Airworthiness Directives; Boeing Model 747–400 Series Airplanes

AGENCY: Federal Aviation Administration, DOT.

ACTION: Notice of proposed rulemaking (NPRM).

SUMMARY: This document proposes the adoption of a new airworthiness directive (AD) that is applicable to certain Boeing Model 747–400 series airplanes. This proposal would require removal of existing inertial reference units (IRU) and installation of modified IRU's. This proposal is prompted by a report of the failure of the left and center IRU's on a single flight. The actions specified by the proposed AD are intended to prevent loss of multiple IRU's in flight, which could result in the loss of navigation data during flight. This could compromise the ability of the flight crew to maintain the safe flight and landing of the airplane.

DATES: Comments must be received by November 22, 1999.

ADDRESSES: Submit comments in triplicate to the Federal Aviation Administration (FAA), Transport Airplane Directorate, ANM–114, Attention: Rules Docket No. 99–NM–248–AD, 1601 Lind Avenue, SW., Renton, Washington 98055–4056. Comments may be inspected at this location between 9:00 a.m. and 3:00 p.m., Monday through Friday, except Federal holidays.

The service information referenced in the proposed rule may be obtained from Boeing Commercial Airplane Group, P.O. Box 3707, Seattle, Washington 98124–2207. This information may be examined at the FAA, Transport Airplane Directorate, 1601 Lind Avenue, SW., Renton, Washington.

FOR FURTHER INFORMATION CONTACT: Jay G. Yi, Aerospace Engineer, Systems and Equipment Branch, ANM–130S, FAA, Transport Airplane Directorate, Seattle Aircraft Certification Office, 1601 Lind Avenue, SW., Renton, Washington 98055–4056; telephone (425) 227–1013; fax (425) 227–1181.

SUPPLEMENTARY INFORMATION:

Comments Invited

Interested persons are invited to participate in the making of the proposed rule by submitting such written data, views, or arguments as they may desire. Communications shall identify the Rules Docket number and be submitted in triplicate to the address specified above. All communications received on or before the closing date for comments, specified above, will be considered before taking action on the proposed rule. The proposals contained in this notice may be changed in light of the comments received.

Comments are specifically invited on the overall regulatory, economic, environmental, and energy aspects of the proposed rule. All comments submitted will be available, both before and after the closing date for comments, in the Rules Docket for examination by interested persons. A report summarizing each FAA-public contact concerned with the substance of this proposal will be filed in the Rules Docket.

Commenters wishing the FAA to acknowledge receipt of their comments submitted in response to this notice must submit a self-addressed, stamped postcard on which the following statement is made: ''Comments to Docket Number 99–NM–248–AD.'' The postcard will be date stamped and returned to the commenter.

Availability of NPRMs

Any person may obtain a copy of this NPRM by submitting a request to the FAA, Transport Airplane Directorate, ANM–114, Attention: Rules Docket No. 99–NM–248–AD, 1601 Lind Avenue, SW., Renton, Washington 98055–4056.

Discussion

The FAA has received a report indicating that the left and center inertial reference units (IRU) failed during a single flight on a Boeing Model 747–400 series airplane. A short circuit in the brake system control unit (BSCU) connected to the left IRU caused the left IRU to fail. The pilot then selected the center IRU to monitor the BSCU. The same short circuit also caused the center IRU to fail. Such failure of multiple IRU's in flight, if not corrected, could result in the loss of navigation data during flight. This could compromise the ability of the flight crew to maintain the safe flight and landing of the airplane.

Explanation of Relevant Service Information

The FAA has reviewed and approved Boeing Alert Service Bulletin 747–34A2638, Revision 1, dated April 8, 1999, which describes procedures for removal of the left, right, and center IRU's, and replacement with modified IRU's. The modified IRU's are redesigned to prevent failure caused by an electrical short circuit in equipment connected to the IRU. Accomplishment of the actions specified in the alert service bulletin is intended to adequately address the identified unsafe condition.

Explanation of Requirements of Proposed Rule

Since an unsafe condition has been identified that is likely to exist or develop on other products of this same type design, the proposed AD would require accomplishment of the actions specified in the alert service bulletin described previously, except as discussed below.

Differences Between Proposed Rule and Alert Service Bulletin

Operators should note that, although the service bulletin recommends accomplishing the replacement of the IRU's with modified IRU's at the earliest opportunity when manpower, parts, and facilities are available, the FAA has determined that such a compliance time would not address the identified unsafe condition in a timely manner. In developing an appropriate compliance time for this AD, the FAA considered not only the manufacturer's recommendation, but the degree of urgency associated with addressing the subject unsafe condition, the average utilization of the affected fleet, and the time necessary to perform the replacement (one hour). In light of all of these factors, the FAA finds a compliance time of 12 months after the effective date of this AD for completing the required actions to be warranted, in that it represents an appropriate interval of time allowable for affected airplanes to continue to operate without compromising safety.

Cost Impact

There are approximately 429 airplanes of the affected design in the worldwide fleet. The FAA estimates that 50 airplanes of U.S. registry would be affected by this proposed AD, that it would take approximately 1 work hour per airplane to accomplish the proposed replacement, and that the average labor rate is $60 per work hour. Required parts would be supplied by the parts manufacturer at no cost to the operators. Based on these figures, the cost impact of the proposed AD on U.S. operators is estimated to be $3,000, or $60 per airplane.

The cost impact figure discussed above is based on assumptions that no operator has yet accomplished any of the proposed requirements of this AD action, and that no operator would

accomplish those actions in the future if this AD were not adopted.

Regulatory Impact

The regulations proposed herein would not have substantial direct effects on the States, on the relationship between the national government and the States, or on the distribution of power and responsibilities among the various levels of government. Therefore, in accordance with Executive Order 12612, it is determined that this proposal would not have sufficient federalism implications to warrant the preparation of a Federalism Assessment.

For the reasons discussed above, I certify that this proposed regulation (1) is not a ''significant regulatory action'' under Executive Order 12866; (2) is not a ''significant rule'' under the DOT Regulatory Policies and Procedures (44 FR 11034, February 26, 1979); and (3) if promulgated, will not have a significant economic impact, positive or negative, on a substantial number of small entities under the criteria of the Regulatory Flexibility Act. A copy of the draft regulatory evaluation prepared for this action is contained in the Rules Docket. A copy of it may be obtained by contacting the Rules Docket at the location provided under the caption **ADDRESSES.**

List of Subjects in 14 CFR Part 39

Air transportation, Aircraft, Aviation safety, Safety.

The Proposed Amendment

Accordingly, pursuant to the authority delegated to me by the Administrator, the Federal Aviation Administration proposes to amend part 39 of the Federal Aviation Regulations (14 CFR part 39) as follows:

PART 39—AIRWORTHINESS DIRECTIVES

1. The authority citation for part 39 continues to read as follows:

Authority: 49 U.S.C. 106(g), 40113, 44701.

§ 39.13 [Amended]

2. Section 39.13 is amended by adding the following new airworthiness directive:

Boeing: Docket 99–NM–248–AD.

Applicability: Model 747–400 series airplanes, having line numbers 696 through 1187 inclusive, certificated in any category; equipped with Honeywell inertial reference units (IRU).

Note 1: This AD applies to each airplane identified in the preceding applicability provision, regardless of whether it has been modified, altered, or repaired in the area subject to the requirements of this AD. For airplanes that have been modified, altered, or repaired so that the performance of the requirements of this AD is affected, the owner/operator must request approval for an alternative method of compliance in accordance with paragraph (c) of this AD. The request should include an assessment of the effect of the modification, alteration, or repair on the unsafe condition addressed by this AD; and, if the unsafe condition has not been eliminated, the request should include specific proposed actions to address it.

Compliance: Required as indicated, unless accomplished previously.

To prevent loss of multiple IRU's in flight, which could result in the loss of navigation data, and compromise the ability of the flight crew to maintain the safe flight and landing of the airplane, accomplish the following:

Replacement

(a) Within 12 months after the effective date of this AD, remove the left, center, and right IRU's, and install modified IRU's, in accordance with Boeing Alert Service Bulletin 747–34A2638, Revision 1, dated April 8, 1999.

Note 2: Removal of existing left, center, and right IRU's and replacement with modified IRU's in accordance with Boeing Alert Service Bulletin 747–34A2638, dated January 29, 1999, is considered acceptable for compliance with paragraph (a) of this AD.

Spares

(b) As of the effective date of this AD, no person shall install an IRU having Boeing part number S242T101–110, S242T101–111, or S242T101–112, on any airplane.

Alternative Methods of Compliance

(c) An alternative method of compliance or adjustment of the compliance time that provides an acceptable level of safety may be used if approved by the Manager, Seattle Aircraft Certification Office (ACO), FAA, Transport Airplane Directorate. Operators shall submit their requests through an appropriate FAA Principal Avionics Inspector, who may add comments and then send it to the Manager, Seattle ACO.

Note 3: Information concerning the existence of approved alternative methods of compliance with this AD, if any, may be obtained from the Seattle ACO.

Special Flight Permits

(d) Special flight permits may be issued in accordance with sections 21.197 and 21.199 of the Federal Aviation Regulations (14 CFR 21.197 and 21.199) to operate the airplane to a location where the requirements of this AD can be accomplished.

Issued in Renton, Washington, on September 29, 1999.

D.L. Riggin,

Acting Manager, Transport Airplane Directorate, Aircraft Certification Service.

[FR Doc. 99–25935 Filed 10–5–99; 8:45 am]

BILLING CODE 4910–13–U

DEPARTMENT OF TRANSPORTATION

Federal Aviation Administration

14 CFR Part 39

[Docket No. 99–NM–233–AD]

RIN 2120–AA64

Airworthiness Directives; Lockheed Model L–1011–385 Series Airplanes

AGENCY: Federal Aviation Administration, DOT.

ACTION: Notice of proposed rulemaking (NPRM).

SUMMARY: This document proposes the supersedure of an existing airworthiness directive (AD), applicable to certain Lockheed Model L–1011–385 series airplanes, that currently requires repetitive inspections to detect cracking of the canted pressure bulkhead at fuselage station (FS) 1212, and repetitive inspections to detect cracking of the web at the fastener rows of the vertical stiffener-to-web; and repair or replacement of the web with a new web, if necessary. This action would require that the initial inspections be accomplished at a reduced threshold. This proposal is prompted by a report of fatigue cracking of the canted pressure bulkhead at FS 1212. The actions specified by the proposed AD are intended to detect and correct fatigue cracking of the canted pressure bulkhead at FS 1212, which could result in blowout of a panel between adjacent stiffeners and consequent cabin depressurization.

DATES: Comments must be received by November 22, 1999.

ADDRESSES: Submit comments in triplicate to the Federal Aviation Administration (FAA), Transport Airplane Directorate, ANM–114, Attention: Rules Docket No. 99–NM–233–AD, 1601 Lind Avenue, SW., Renton, Washington 98055–4056. Comments may be inspected at this location between 9:00 a.m. and 3:00 p.m., Monday through Friday, except Federal holidays.

The service information referenced in the proposed rule may be obtained from Lockheed Martin Aircraft & Logistics Center, 120 Orion Street, Greenville, South Carolina 29605. This information may be examined at the FAA, Transport Airplane Directorate, 1601 Lind Avenue, SW., Renton, Washington; or at the FAA, Small Airplane Directorate, Atlanta Aircraft Certification Office, One Crown Center, 1895 Phoenix Boulevard, suite 450, Atlanta, Georgia.

FOR FURTHER INFORMATION CONTACT: Thomas Peters, Program Manager,

Program Management and Services Branch, ACE–118A, FAA, Small Airplane Directorate, Atlanta Aircraft Certification Office, One Crown Center, 1895 Phoenix Boulevard, suite 450, Atlanta, Georgia 30349; telephone (770) 703–6063; fax (770) 703–6097.

SUPPLEMENTARY INFORMATION:

Comments Invited

Interested persons are invited to participate in the making of the proposed rule by submitting such written data, views, or arguments as they may desire. Communications shall identify the Rules Docket number and be submitted in triplicate to the address specified above. All communications received on or before the closing date for comments, specified above, will be considered before taking action on the proposed rule. The proposals contained in this notice may be changed in light of the comments received.

Comments are specifically invited on the overall regulatory, economic, environmental, and energy aspects of the proposed rule. All comments submitted will be available, both before and after the closing date for comments, in the Rules Docket for examination by interested persons. A report summarizing each FAA-public contact concerned with the substance of this proposal will be filed in the Rules Docket.

Commenters wishing the FAA to acknowledge receipt of their comments submitted in response to this notice must submit a self-addressed, stamped postcard on which the following statement is made: ''Comments to Docket Number 99–NM–233–AD.'' The postcard will be date stamped and returned to the commenter.

Availability of NPRMs

Any person may obtain a copy of this NPRM by submitting a request to the FAA, Transport Airplane Directorate, ANM–114, Attention: Rules Docket No. 99–NM–233–AD, 1601 Lind Avenue, SW., Renton, Washington 98055–4056.

Discussion

On September 26, 1996, the FAA issued AD 96–20–10, amendment 39–9776 (61 FR 53044, October 10, 1996), applicable to certain Lockheed Model L–1011–385 series airplanes, to require inspections to detect cracking of the canted pressure bulkhead at fuselage station (FS) 1212, and inspections to detect cracking of the web at the fastener rows of the vertical stiffener-to-web; and repair or replacement of the web with a new web, if necessary. That action was prompted by a report of fatigue cracking of the canted pressure bulkhead at FS 1212. The requirements of that AD are intended to detect and correct fatigue cracking of the canted pressure bulkhead at FS 1212, which could result in blowout of a panel between adjacent stiffeners and consequent cabin depressurization.

Actions Since Issuance of Previous Rule

Since the issuance of that AD, the FAA has received an additional report of fatigue cracking in the subject area on one of these airplanes. The airplane on which the cracking occurred had accumulated fewer flight cycles at the time the cracking was detected than the number of flight cycles specified as the inspection threshold in AD 96–20–10.

Explanation of Relevant Service Information

The FAA has reviewed and approved Lockheed L–1011 Service Bulletin 093–53–277, Revision 1, dated November 19, 1998, which describes procedures for repetitive detailed visual inspections to detect cracking of the entire aft surface of the canted pressure bulkhead at FS 1212 between left buttock line (LBL) 103 and right buttock line (RBL) 103, and repetitive optical inspections (i.e., using a borescope or mirror) to detect cracking of the web at the fastener rows of the vertical stiffener-to-web; and repair or replacement of the web with a new web, if necessary. Accomplishment of the actions specified in the service bulletin is intended to adequately address the identified unsafe condition.

Explanation of Requirements of Proposed Rule

Since an unsafe condition has been identified that is likely to exist or develop on other products of this same type design, the proposed AD would supersede AD 96–20–10 to continue to require repetitive inspections to detect cracking of the canted pressure bulkhead at FS 1212, and repetitive inspections to detect cracking of the web at the fastener rows of the vertical stiffener-to-web; and repair or replacement of the web with a new web, if necessary. The proposed AD would require that the initial inspections be accomplished at a reduced threshold. The actions would be required to be accomplished in accordance with the service bulletin described previously.

Explanation of Changes Made to Requirements of AD 96–20–10

The FAA has restated the compliance time in terms of flight cycles, instead of landings. This is consistent with the compliance times stated in the service bulletin. In addition, the inspection identified in AD 96–20–10 as a ''close visual inspection'' is identified in this proposed AD as a ''detailed visual inspection.'' Furthermore, the FAA has added a note to the proposed AD to clarify the definition of a detailed visual inspection.

Cost Impact

There are approximately 235 airplanes of the affected design in the worldwide fleet. The FAA estimates that 116 airplanes of U.S. registry would be affected by this proposed AD. The requirements of this proposed AD would not add any new additional economic burden on affected operators, other than the costs that are associated with beginning the inspections at an earlier time than would have been required by AD 96–20–10 (initial inspection is now required within 18,000 flight cycles, rather than 20,000 flight cycles).

The inspections that are currently required by AD 96–20–10, and retained in this proposed AD, take approximately 5 work hours per airplane to accomplish, at an average labor rate of $60 per work hour. Based on these figures, the cost impact of the currently required actions on U.S. operators is estimated to be $34,800, or $300 per airplane, per inspection cycle.

The cost impact figure discussed above is based on assumptions that no operator has yet accomplished any of the current or proposed requirements of this AD action, and that no operator would accomplish those actions in the future if this AD were not adopted.

Regulatory Impact

The regulations proposed herein would not have substantial direct effects on the States, on the relationship between the national government and the States, or on the distribution of power and responsibilities among the various levels of government. Therefore, in accordance with Executive Order 12612, it is determined that this proposal would not have sufficient federalism implications to warrant the preparation of a Federalism Assessment.

For the reasons discussed above, I certify that this proposed regulation (1) is not a ''significant regulatory action'' under Executive Order 12866; (2) is not a ''significant rule'' under the DOT Regulatory Policies and Procedures (44 FR 11034, February 26, 1979); and (3) if promulgated, will not have a significant economic impact, positive or negative, on a substantial number of small entities under the criteria of the Regulatory Flexibility Act. A copy of the draft regulatory evaluation prepared for this action is contained in the Rules Docket. A copy of it may be obtained by

contacting the Rules Docket at the location provided under the caption **ADDRESSES.**

List of Subjects in 14 CFR Part 39

Air transportation, Aircraft, Aviation safety, Safety.

The Proposed Amendment

Accordingly, pursuant to the authority delegated to me by the Administrator, the Federal Aviation Administration proposes to amend part 39 of the Federal Aviation Regulations (14 CFR part 39) as follows:

PART 39—AIRWORTHINESS DIRECTIVES

1. The authority citation for part 39 continues to read as follows:

Authority: 49 U.S.C. 106(g), 40113, 44701.

§ 39.13 [Amended]

2. Section 39.13 is amended by removing amendment 39–9776 (61 FR 53044, October 10, 1996), and by adding a new airworthiness directive (AD), to read as follows:

Lockheed: Docket 99–NM–233–AD. Supersedes AD 96–20–10, Amendment 39–9776.

Applicability: Model L–1011–385 series airplanes; serial numbers 1013 through 1250 inclusive; certificated in any category.

Note 1: This AD applies to each airplane identified in the preceding applicability provision, regardless of whether it has been modified, altered, or repaired in the area subject to the requirements of this AD. For airplanes that have been modified, altered, or repaired so that the performance of the requirements of this AD is affected, the owner/operator must request approval for an alternative method of compliance in accordance with paragraph (c)(1) of this AD. The request should include an assessment of the effect of the modification, alteration, or repair on the unsafe condition addressed by this AD; and, if the unsafe condition has not been eliminated, the request should include specific proposed actions to address it.

Compliance: Required as indicated, unless accomplished previously.

To detect and correct fatigue cracking of the canted pressure bulkhead at fuselage station (FS) 1212, which could result in blowout of a panel between adjacent stiffeners and consequent cabin depressurization, accomplish the following:

Repetitive Inspections

(a) Perform a detailed visual inspection to detect cracking of the entire aft surface of the canted pressure bulkhead at FS 1212 between left buttock line (LBL) 103 and right buttock line (RBL) 103; and perform an optical inspection using a borescope or other optical device to detect cracking of the web at the fastener rows of the vertical stiffener-to-web; in accordance with Lockheed L–1011 Service Bulletin 093–53–277, dated July 2, 1996, or Revision 1, dated November 19, 1998; at the earlier of the times specified in paragraphs (a)(1) and (a)(2) of this AD. Thereafter, repeat these inspections at intervals not to exceed 1,000 flight cycles.

(1) Prior to the accumulation of 20,000 total flight cycles, or within 60 days after October 25, 1996 (the effective date of AD 96–20–10), whichever occurs later; or

(2) Prior to the accumulation of 18,000 total flight cycles, or within 60 days after the effective date of this AD, whichever occurs later.

Note 2: For the purposes of this AD, a detailed visual inspection is defined as: ''An intensive visual examination of a specific structural area, system, installation, or assembly to detect damage, failure, or irregularity. Available lighting is normally supplemented with a direct source of good lighting at intensity deemed appropriate by the inspector. Inspection aids such as mirror, magnifying lenses, etc., may be used. Surface cleaning and elaborate access procedures may be required.''

Repair

(b) If any cracking is found during any inspection required by paragraph (a) of this AD, prior to further flight, accomplish either paragraph (b)(1) or (b)(2) of this AD.

(1) Accomplish either paragraph (b)(1)(i) or (b)(1)(ii) of this AD, as applicable.

(i) If the cracking is found in an area that is specified in Lockheed Repair Drawing LCC–7622–385, repair in accordance with Lockheed L–1011 Service Bulletin 093–53–277, dated July 2, 1996, or Revision 1, dated November 19, 1998. Accomplishment of a repair constitutes terminating action for the repetitive inspections required by paragraph (a) of this AD at the repaired location only. Or

(ii) If the cracking is found in an area that is not specified in Lockheed Repair Drawing LCC–7622–385, repair in accordance with a method approved by the Manager, Atlanta Aircraft Certification Office (ACO), FAA, Small Airplane Directorate.

(2) Replace the entire web with a new web in accordance with Lockheed L–1011 Service Bulletin 093–53–277, dated July 2, 1996, or Revision 1, dated November 19, 1998. Such replacement constitutes terminating action for the repetitive inspections required by paragraph (a) of this AD.

Alternative Methods of Compliance

(c)(1) An alternative method of compliance or adjustment of the compliance time that provides an acceptable level of safety may be used if approved by the Manager, Atlanta ACO. Operators shall submit their requests through an appropriate FAA Principal Maintenance Inspector, who may add comments and then send it to the Manager, Atlanta ACO.

(c)(2) Alternative methods of compliance, approved previously in accordance with AD 96–20–10, amendment 39–9776, are approved as alternative methods of compliance with paragraph (b) of this AD.

Note 3: Information concerning the existence of approved alternative methods of compliance with this AD, if any, may be obtained from the Atlanta ACO.

Special Flight Permits

(d) Special flight permits may be issued in accordance with sections 21.197 and 21.199 of the Federal Aviation Regulations (14 CFR 21.197 and 21.199) to operate the airplane to a location where the requirements of this AD can be accomplished.

Issued in Renton, Washington, on September 29, 1999.

D.L. Riggin,

Acting Manager, Transport Airplane Directorate, Aircraft Certification Service.

[FR Doc. 99–25934 Filed 10–5–99; 8:45 am]

BILLING CODE 4910–13–U

DEPARTMENT OF TRANSPORTATION

Federal Aviation Administration

14 CFR Part 39

[Docket No. 99–NM–221–AD]

RIN 2120–AA64

Airworthiness Directives; Lockheed Model L–1011–385 Series Airplanes

AGENCY: Federal Aviation Administration, DOT.

ACTION: Notice of proposed rulemaking (NPRM).

SUMMARY: This document proposes the adoption of a new airworthiness directive (AD) that is applicable to certain Lockheed Model L–1011–385 series airplanes. This proposal would require modification of the high pressure bleed valve controller of each engine. This proposal is prompted by reports of failure of the bleed air system components such as the thermal compensators and bleed air ducts. The actions specified by the proposed AD are intended to prevent such failures of the bleed air system components, which could result in high temperature air leaking into the cabin and/or cargo areas and could possibly require an emergency landing and evacuation.

DATES: Comments must be received by November 22, 1999.

ADDRESSES: Submit comments in triplicate to the Federal Aviation Administration (FAA), Transport Airplane Directorate, ANM–114, Attention: Rules Docket No. 99–NM–221–AD, 1601 Lind Avenue, SW., Renton, Washington 98055–4056. Comments may be inspected at this location between 9:00 a.m. and 3:00 p.m., Monday through Friday, except Federal holidays.

The service information referenced in the proposed rule may be obtained from Lockheed Martin Aircraft & Logistics Center, 120 Orion Street, Greenville, South Carolina 29605. This information

may be examined at the FAA, Transport Airplane Directorate, 1601 Lind Avenue, SW., Renton, Washington; or at the FAA, Small Airplane Directorate, Atlanta Aircraft Certification Office, One Crown Center, 1895 Phoenix Boulevard, suite 450, Atlanta, Georgia.

FOR FURTHER INFORMATION CONTACT: Thomas Peters, Aerospace Engineer, Systems and Flight Test Branch, ACE–116A, FAA, Small Airplane Directorate, Atlanta Aircraft Certification Office, One Crown Center, 1895 Phoenix Boulevard, suite 450, Atlanta, Georgia 30349; telephone (770) 703–6063; fax (770) 703–6097.

SUPPLEMENTARY INFORMATION:

Comments Invited

Interested persons are invited to participate in the making of the proposed rule by submitting such written data, views, or arguments as they may desire. Communications shall identify the Rules Docket number and be submitted in triplicate to the address specified above. All communications received on or before the closing date for comments, specified above, will be considered before taking action on the proposed rule. The proposals contained in this notice may be changed in light of the comments received.

Comments are specifically invited on the overall regulatory, economic, environmental, and energy aspects of the proposed rule. All comments submitted will be available, both before and after the closing date for comments, in the Rules Docket for examination by interested persons. A report summarizing each FAA-public contact concerned with the substance of this proposal will be filed in the Rules Docket.

Commenters wishing the FAA to acknowledge receipt of their comments submitted in response to this notice must submit a self-addressed, stamped postcard on which the following statement is made: ''Comments to Docket Number 99–NM–221–AD.'' The postcard will be date stamped and returned to the commenter.

Availability of NPRMs

Any person may obtain a copy of this NPRM by submitting a request to the FAA, Transport Airplane Directorate, ANM–114, Attention: Rules Docket No. 99–NM–221–AD, 1601 Lind Avenue, SW., Renton, Washington 98055–4056.

Discussion

The FAA has received reports of failures of the bleed air system components, such as the thermal compensators and bleed air ducts, on certain Lockheed Model L–1011–385 series airplanes. Investigation revealed that during a selection of the anti-ice mode, a sudden overpressure spike condition of the bleed air system can occur. This overpressure spike condition is caused when the engine high pressure bleed valve is opened rapidly by its controller. This overpressure has contributed to failures of the bleed air system components. Such failures of the bleed air system components, if not corrected, could result in high temperature air leaking into the cabin and/or cargo areas and could possibly require an emergency landing and evacuation.

Explanation of Relevant Service Information

The FAA has reviewed and approved Lockheed Service Bulletin 093–36–065, dated February 9, 1999, which describes procedures for modification of the high pressure bleed valve controller of each engine. The modification involves the installation of a specific restrictor check valve into the high pressure bleed valve controller of each engine. Accomplishment of the action specified in the service bulletin is intended to adequately address the identified unsafe condition.

The Lockheed service bulletin references Hamilton Standard Service Bulletin 36–1060, Revision 1, dated March 1, 1977, as an additional source of service information for accomplishing the modification.

Explanation of Requirements of Proposed Rule

Since an unsafe condition has been identified that is likely to exist or develop on other products of this same type design, the proposed AD would require accomplishment of the actions specified in the service bulletin described previously, except as discussed below.

Differences Between Proposed Rule and Service Information

Operators should note that the Lockheed service bulletin (described previously) provides service information for accomplishing the modification of the high pressure bleed valve controller with the installation of Hamilton Standard restrictor check valve part number (P/N) 764898–2 in the high pressure bleed valve controller P/N 739084–3. However, this proposed AD would be applicable to those airplanes that are equipped with high pressure bleed valve controller P/N 739084–2 or 739084–3. The high pressure bleed valve controller P/N 739084–2 has no restrictor check valve installed, and the bleed valve controller P/N 739084–3 has a restrictor check valve installed that occasionally causes an inability to supply bleed augmentation. To reduce the probability of either a rupture of the bleed air system or the inability to deliver additional bleed, this proposed AD would require the modification of both high pressure bleed valve controller types to the latest configuration (P/N 739084–4) with the installation of the restrictor check valve P/N 764898–2.

Cost Impact

There are approximately 235 airplanes of the affected design in the worldwide fleet. The FAA estimates that 116 airplanes of U.S. registry would be affected by this proposed AD, that it would take approximately 2 work hours per airplane to accomplish the proposed replacement, and that the average labor rate is $60 per work hour. Required parts would cost approximately $650 per airplane. Based on these figures, the cost impact of the proposed AD on U.S. operators is estimated to be $89,320, or $770 per airplane.

The cost impact figure discussed above is based on assumptions that no operator has yet accomplished any of the proposed requirements of this AD action, and that no operator would accomplish those actions in the future if this AD were not adopted.

Regulatory Impact

The regulations proposed herein would not have substantial direct effects on the States, on the relationship between the national government and the States, or on the distribution of power and responsibilities among the various levels of government. Therefore, in accordance with Executive Order 12612, it is determined that this proposal would not have sufficient federalism implications to warrant the preparation of a Federalism Assessment.

For the reasons discussed above, I certify that this proposed regulation (1) is not a ''significant regulatory action'' under Executive Order 12866; (2) is not a ''significant rule'' under the DOT Regulatory Policies and Procedures (44 FR 11034, February 26, 1979); and (3) if promulgated, will not have a significant economic impact, positive or negative, on a substantial number of small entities under the criteria of the Regulatory Flexibility Act. A copy of the draft regulatory evaluation prepared for this action is contained in the Rules Docket. A copy of it may be obtained by contacting the Rules Docket at the location provided under the caption **ADDRESSES**.

List of Subjects in 14 CFR Part 39

Air transportation, Aircraft, Aviation safety, Safety.

The Proposed Amendment

Accordingly, pursuant to the authority delegated to me by the Administrator, the Federal Aviation Administration proposes to amend part 39 of the Federal Aviation Regulations (14 CFR part 39) as follows:

PART 39—AIRWORTHINESS DIRECTIVES

1. The authority citation for part 39 continues to read as follows:

Authority: 49 U.S.C. 106(g), 40113, 44701.

§ 39.13 [Amended]

2. Section 39.13 is amended by adding the following new airworthiness directive:

Lockheed: Docket 99–NM–221–AD.

Applicability: Model L–1011–385–1, –1–14, –1–15, and –3 series airplanes equipped with high pressure bleed valve controller Hamilton Standard part number (P/N) 739084–2 or 739084–3 (Lockheed P/N 672286–103 or 672286–105); certificated in any category.

Note 1: This AD applies to each airplane identified in the preceding applicability provision, regardless of whether it has been modified, altered, or repaired in the area subject to the requirements of this AD. For airplanes that have been modified, altered, or repaired so that the performance of the requirements of this AD is affected, the owner/operator must request approval for an alternative method of compliance in accordance with paragraph (c) of this AD. The request should include an assessment of the effect of the modification, alteration, or repair on the unsafe condition addressed by this AD; and, if the unsafe condition has not been eliminated, the request should include specific proposed actions to address it.

Compliance: Required as indicated, unless accomplished previously.

To prevent failures of the bleed air system components, which could result in high temperature air leaking into the cabin and/or cargo areas and could possibly require an emergency landing and evacuation, accomplish the following:

(a) Within 14 months after the effective date of this AD, modify the high pressure bleed valve controller of each engine in accordance with Lockheed Service Bulletin 093–36–065, dated February 9, 1999.

Note 2: Hamilton Standard has issued Service Bulletin 36–1060, Revision 1, dated March 1, 1977, as an additional source of service information for the modification of the high pressure bleed valve controller of each engine.

(b) As of the effective date of this AD, no person shall install on any airplane a high pressure bleed valve controller, unless it has been modified in accordance with this AD.

Alternative Methods of Compliance

(c) An alternative method of compliance or adjustment of the compliance time that provides an acceptable level of safety may be used if approved by the Manager, Atlanta Aircraft Certification Office (ACO), FAA, Small Airplane Directorate. Operators shall submit their requests through an appropriate FAA Principal Maintenance Inspector, who may add comments and then send it to the Manager, Atlanta ACO.

Note 3: Information concerning the existence of approved alternative methods of compliance with this AD, if any, may be obtained from the Atlanta ACO.

Special Flight Permits

(d) Special flight permits may be issued in accordance with sections 21.197 and 21.199 of the Federal Aviation Regulations (14 CFR 21.197 and 21.199) to operate the airplane to a location where the requirements of this AD can be accomplished.

Issued in Renton, Washington, on September 29, 1999.

D.L. Riggin,

Acting Manager, Transport Airplane Directorate, Aircraft Certification Service.

[FR Doc. 99–25933 Filed 10–5–99; 8:45 am]

BILLING CODE 4910–13–U

DEPARTMENT OF TRANSPORTATION

Federal Aviation Administration

14 CFR Part 39

[Docket No. 99–CE–27–AD]

RIN 2120–AA64

Airworthiness Directives; REVO, Incorporated Models Lake LA–4, Lake LA–4A, Lake LA–4P, Lake LA–4–200, and Lake Model 250 Airplanes

AGENCY: Federal Aviation Administration, DOT.

ACTION: Notice of proposed rulemaking (NPRM).

SUMMARY: This document proposes to adopt a new airworthiness directive (AD) that would apply to certain REVO, Incorporated (REVO) Models Lake LA–4, Lake LA–4A, Lake LA–4P, Lake LA–4–200, and Lake Model 250 airplanes. The proposed AD would require inspecting the left and right wing upper and lower spar caps and doublers for cracks, replacing any cracked parts and/or incorporating a modification kit depending on the extent of the damage, and reporting the results of the inspection to the Federal Aviation Administration (FAA). The proposed AD is the result of a report of a fatigue crack found at the second most inboard wing attachment bolt hole on one of the affected airplanes. Similar fatigue cracking has since been reported on seven more of the affected airplanes. The actions specified by the proposed AD are intended to detect and correct cracks in the wing spar caps and doublers, which could result in loss of the wing with consequent loss of control of the airplane.

DATES: Comments must be received on or before December 14, 1999.

ADDRESSES: Submit comments in triplicate to the FAA, Central Region, Office of the Regional Counsel, Attention: Rules Docket No. 99–CE–27–AD, Room 1558, 601 E. 12th Street, Kansas City, Missouri 64106. Comments may be inspected at this location between 8 a.m. and 4 p.m., Monday through Friday, holidays excepted.

Service information that applies to the proposed AD may be obtained from REVO, Incorporated, P.O. Box 312, One High Street, Sanford, Maine 04073. This information also may be examined at the Rules Docket at the address above.

FOR FURTHER INFORMATION CONTACT: Mr. Richard B. Noll, Aerospace Engineer, FAA, Boston Aircraft Certification Office, 12 New England Executive Park, Burlington, Massachusetts 01803; telephone: (781) 238–7160; facsimile: (781) 238–7199.

SUPPLEMENTARY INFORMATION:

Comments Invited

Interested persons are invited to participate in the making of the proposed rule by submitting such written data, views, or arguments as they may desire. Communications should identify the Rules Docket number and be submitted in triplicate to the address specified above. All communications received on or before the closing date for comments, specified above, will be considered before taking action on the proposed rule. The proposals contained in this notice may be changed in light of the comments received.

Comments are specifically invited on the overall regulatory, economic, environmental, and energy aspects of the proposed rule. All comments submitted will be available, both before and after the closing date for comments, in the Rules Docket for examination by interested persons. A report that summarizes each FAA-public contact concerned with the substance of this proposal will be filed in the Rules Docket.

Commenters wishing the FAA to acknowledge receipt of their comments submitted in response to this notice must submit a self-addressed, stamped postcard on which the following statement is made: ''Comments to Docket No. 99–CE–27–AD.'' The

postcard will be date stamped and returned to the commenter.

Availability of NPRMs

Any person may obtain a copy of this NPRM by submitting a request to the FAA, Central Region, Office of the Regional Counsel, Attention: Rules Docket No. 99–CE–27–AD, Room 1558, 601 E. 12th Street, Kansas City, Missouri 64106.

Discussion

The FAA has received a report of fatigue cracks that were found at the second-most inboard wing attachment bolt hole on a REVO Lake Model 250 airplane. The cracks were detected during wing repair where the wing spar and wing skin were disassembled. Further analysis indicated that the cracks initiated at a machined notch at the flange termination point of the spar cap.

The REVO Models Lake LA–4, Lake LA–4A, Lake LA–4P, and Lake LA–4–200 airplanes are of the same type design as the Lake Model 250 airplanes. Similar fatigue cracking to that of the above-referenced report has been found on seven more of these airplanes.

This condition, if not detected and corrected in a timely manner, could result in loss of the wing with consequent loss of control of the airplane.

Relevant Service Information

REVO has issued Service Bulletin B–79, dated June 12, 1999, which specifies procedures for accomplishing the following on the REVO Models Lake LA–4, Lake LA–4A, Lake LA–4P, Lake LA–4–200, and Lake Model 250 airplanes:

—Inspecting the upper and lower wing spar doublers for fatigue cracks and corrosion;

—Inspecting the upper and lower wing spar cap angles for fatigue cracks and corrosion;

—Repairing or replacing any cracked or corroded parts or areas, as applicable; and

—Incorporating Aerofab B–79 kit on the wing spars.

The FAA's Determination

After examining the circumstances and reviewing all available information related to the incidents described above, the FAA has determined that AD action should be taken to detect and correct cracks in the wing spar caps and doublers, which could result in loss of the wing with consequent loss of control of the airplane.

Explanation of the Provisions of the Proposed AD

Since an unsafe condition has been identified that is likely to exist or develop in other REVO Models Lake LA–4, Lake LA–4A, Lake LA–4P, Lake LA–4–200, and Lake Model 250 airplanes of the same type design, the FAA is proposing AD action. The proposed AD would require inspecting the left and right wing upper and lower spar caps and doublers for cracks, replacing any cracked parts and/or incorporating a modification kit depending on the extent of the damage, and reporting the results of the inspection to the FAA.

Accomplishment of the proposed actions would be required in accordance with REVO Service Bulletin B–79, dated June 12, 1999.

Cost Impact

The FAA estimates that 641 airplanes in the U.S. registry would be affected by the actions specified in the proposed AD.

Wing removal and reinstallation to perform the proposed inspection would take approximately 32 workhours and the proposed inspection itself would take approximately 8 workhours per airplane. The average labor rate is approximately $60 an hour. Based on these figures, the total cost impact of the proposed inspection, including wing removal and reinstallation, on U.S. operators is estimated to be $1,538,400, or $2,400 per airplane.

The incorporation of the modification kit proposed in this action would take approximately 12 workhours (6 hours per wing) to accomplish at an average labor rate of $60 per hour. The modification kit costs $2,000 for Model Lake 250 airplanes and $1,600 for Models Lake LA–4 and Lake LA–4–200 airplanes (average of $1,800 for cost impact considerations). Based on these figures, the total cost impact of the proposed modification on U.S. operators is estimated to be $1,615,320, or $2,520 per airplane.

These figures do not take into account the costs of any part replacements that would be necessary if the FAA adopted the proposed rule. The FAA has no way of determining whether part replacements would be necessary for any affected airplane.

Compliance Time of the Proposed AD

The compliance time of the proposed AD is presented in both hours time-in-service (TIS) and calendar time with the prevalent one being that which occurs first. The reason for this is that the fatigue cracks on the affected airplanes may have already initiated and could be further developing on the low-usage airplanes as well as high-usage airplanes. Utilizing the dual compliance times would assure that cracks in the wing spars would be detected on all affected airplanes in a timely manner without inadvertently grounding any of the affected airplanes.

Differences Between the Proposed AD and the Relevant Service Information

REVO Service Bulletin B–79, dated June 12, 1999, specifies an inspection of the spar caps and angles for corrosion, as well as for fatigue cracks. After analyzing all service history and information related to this subject, the FAA has determined that the fatigue cracks that are developing in the spar cap angle are not associated with corrosion. Therefore, the proposed inspection in this AD only incorporates the fatigue crack specifications and does not include the corrosion specifications.

Regulatory Impact

The regulations proposed herein would not have substantial direct effects on the States, on the relationship between the national government and the States, or on the distribution of power and responsibilities among the various levels of government. Therefore, in accordance with Executive Order 12612, it is determined that this proposal would not have sufficient federalism implications to warrant the preparation of a Federalism Assessment.

For the reasons discussed above, I certify that this action (1) is not a ''significant regulatory action'' under Executive Order 12866; (2) is not a ''significant rule'' under DOT Regulatory Policies and Procedures (44 FR 11034, February 26, 1979); and (3) if promulgated, will not have a significant economic impact, positive or negative, on a substantial number of small entities under the criteria of the Regulatory Flexibility Act. A copy of the draft regulatory evaluation prepared for this action has been placed in the Rules Docket. A copy of it may be obtained by contacting the Rules Docket at the location provided under the caption ADDRESSES.

List of Subjects in 14 CFR Part 39

Air transportation, Aircraft, Aviation safety, Safety.

The Proposed Amendment

Accordingly, pursuant to the authority delegated to me by the Administrator, the Federal Aviation Administration proposes to amend part 39 of the Federal Aviation Regulations (14 CFR part 39) as follows:

PART 39—AIRWORTHINESS DIRECTIVES

1. The authority citation for part 39 continues to read as follows:

Authority: 49 U.S.C. 106(g), 40113, 44701.

§ 39.13 [Amended]

2. Section 39.13 is amended by adding a new airworthiness directive (AD) to read as follows:

REVO, Incorporated: Docket No. 99–CE–27–AD.

Applicability: The model and serial numbers airplanes, certificated in any category, that are listed in the following chart and incorporate any of the wing spar part numbers (or FAA-approved equivalent part numbers) that are in the chart below the airplane models and serial numbers:

AFFECTED AIRPLANES

Model	Serial Nos.
Lake LA–4	246 through 421, 423 through 429, 445, and 446.
Lake LA–4A ...	244 and 245.
Lake LA–4P ...	121.
Lake LA–4–200.	422, 430 through 444, and all serial numbers after 446.
Lake Model 250.	1 through 232.

WING SPAR PART NUMBERS INCORPORATED

Wing spar parts	Part Nos.
Upper Spar Cap Angles.	2–1610–015 and 2–1610–016.
Lower Spar Cap Angles.	2–1610–075 and 2–1610–076.
Upper Spar Doublers.	2–1610–061 and 2–1610–081 and 2–1610–065.
Lower Spar Doublers.	2–1610–063 and 2–1610–083.

Note 1: Improved design spar cap angles and the doubler kit referenced in this AD were incorporated at manufacture on the Lake Model 250 airplanes beginning with serial number 233. This AD does not apply to those airplanes.

Note 2: This AD applies to each airplane identified in the preceding applicability provision, regardless of whether it has been modified, altered, or repaired in the area subject to the requirements of this AD. For airplanes that have been modified, altered, or repaired so that the performance of the requirements of this AD is affected, the owner/operator must request approval for an alternative method of compliance in accordance with paragraph (h) of this AD. The request should include an assessment of the effect of the modification, alteration, or repair on the unsafe condition addressed by this AD; and, if the unsafe condition has not been eliminated, the request should include specific proposed actions to address it.

Compliance: Required as follows, unless already accomplished:

Inspections Required by Paragraph (a) of This AD

At whichever of the following that occurs first:

Upon the accumulation of 500 hours time-in-service (TIS) on the wing spars or within the next 50 hours TIS after the effective date of this AD, whichever occurs later; or

Upon the accumulation of 500 hours TIS on the wing spars or within the next 12 calendar months after the effective date of this AD, whichever occurs later.

Repair, Replacement, and Kit Incorporation Required by Paragraphs (b), (c), and (d) of This AD

Prior to further flight after the inspection required by paragraph (a) of this AD.

To detect and correct cracks in the wing spar caps and doublers, which could result in loss of the wing with consequent loss of control of the airplane, accomplish the following:

Note 3: The paragraph structure of this AD is as follows:

Level 1: (a), (b), (c), etc.

Level 2: (1), (2), (3), etc.

Level 3: (i), (ii), (iii), etc.

Level 2 and Level 3 structures are designations of the Level 1 paragraph they immediately follow.

(a) At the time specified in the *Inspections Required by Paragraph (a) of this AD* portion of the Compliance section of this AD, accomplish the following in accordance with the Inspection section of Service Bulletin B–79, dated June 12, 1999:

(1) Remove the wings in accordance with the applicable maintenance manual. This procedure is part of the service bulletin, but is repeated in the AD to assure that the inspections are not accomplished before removing the wings.

(2) Inspect the upper and lower wing spar doublers for fatigue cracks from the root end to outboard of the wing attachment fitting bolt holes, using solvent-removable fluorescent dye with a high sensitivity (Type I, Method C, Sensitivity Level 3), in accordance with ASTM E 165–95 and E 1417–95a or SAE 2647; and

(3) Inspect the upper and lower wing spar cap angles for fatigue cracks from the root end to outboard of the wing attachment fitting bolt holes, using solvent-removable fluorescent dye with a high sensitivity (Type I, Method C, Sensitivity Level 3), in accordance with ASTM E 165–95 and E 1417–95a or SAE 2647. Cracks have been found in the cutout radius of the vertical flange near the second outboard hole.

(b) If any crack(s) is(are) found in any spar doubler during any inspection required by this AD, prior to further flight, replace the spar doubler with a new part of the same part number, in accordance with the applicable maintenance manual.

(c) If more than one crack is found in any spar cap angle, prior to further flight, accomplish both (1) and (2) below:

(1) Replace any applicable spar cap angle with one of the following spar cap angles in accordance with the applicable maintenance manual:

(i) Upper Spar Cap Angles: P/N 2–1610–087 and P/N 2–1610–088; and

(ii) Lower Spar Cap Angles: P/N 2–1610–089 and 2–1610–091.

(2) Incorporate Aerofab B–79 kit in accordance with the Kit section of Service Bulletin B–79, dated June 12, 1999. This kit incorporates the following parts:

(i) Upper Spar Doubler: P/N 2–1610–093

(ii) Upper Spar Filler: P/N 2–1610–095

(iii) Lower Spar Doubler: P/N 2–1610–101

(iv) Lower Spar Fillers: P/N 2–1610–097 and P/N 2–1610–099

(d) If no cracks are found in the spar cap angles or if only one crack is found in any spar cap angle (cracks have predominantly been found in the cutout radius near the second outboard hole) of any spar cap angle, prior to further flight, incorporate Aerofab B–79 kit in accordance with the Kit section of Service Bulletin B–79, dated June 12, 1999.

(e) After the effective date of this AD, no person may install a wing on any of the affected airplanes, unless one of the following exists:

(1) The wing is new from the factory; or

(2) The inspection, repair and replacement, and kit incorporation requirements of this AD have been accomplished at the time of installation.

(f) At the applicable compliance time presented in paragraphs (f)(1) and (f)(2) of this AD, report all inspection results to the Manager, FAA, Boston Aircraft Certification Office, Boston Aircraft Certification Office (ACO), 12 New England Executive Park, Burlington, Massachusetts 01803. Use the form that is referenced as the ''Appendix to Docket No. 99–CE–27–AD'' to present the findings. Information collection requirements contained in this regulation have been approved by the Office of Management and Budget (OMB) under the provisions of the Paperwork Reduction Act of 1980 (44 U.S.C. 3501 *et seq.*) and have been assigned OMB Control Number 2120–0056.

(1) Within 10 calendar days after accomplishing the inspection required by paragraph (a) of this AD; or

(2) Within 10 calendar days after the effective date of this AD if the requirements of this AD have already been accomplished.

Note 4: The following information is helpful in accomplishing this AD:

Cracks, if present in the affected areas, typically run fore and aft across the vertical flange thickness at or near the intersection with the horizontal flange; and

Although this AD does not have to be accomplished at a REVO-authorized repair facility, the equipment and jigs needed to accomplish parts replacement are available at REVO-authorized repair facilities.

(g) Special flight permits may be issued in accordance with sections 21.197 and 21.199 of the Federal Aviation Regulations (14 CFR 21.197 and 21.199) to operate the airplane to a location where the requirements of this AD can be accomplished.

(h) An alternative method of compliance or adjustment of the compliance times that provides an equivalent level of safety may be

approved by the Manager, FAA, Boston Aircraft Certification Office (ACO), 12 New England Executive Park, Burlington, Massachusetts 01803. The request shall be forwarded through an appropriate FAA Maintenance Inspector, who may add comments and then send it to the Manager, Boston ACO.

Note 5: Information concerning the existence of approved alternative methods of compliance with this AD, if any, may be obtained from the Boston ACO.

(i) All persons affected by this directive may obtain copies of the document referred to herein upon request to REVO, Incorporated, P.O. Box 312, One High Street, Sanford, Maine 04073; or may examine this document at the FAA, Central Region, Office of the Regional Counsel, Room 1558, 601 E. 12th Street, Kansas City, Missouri 64106.

Appendix to Docket No. 99–CE–27–AD Inspection Results Report

Report the following information to: Manager, Boston Aircraft Certification Office, Engine and Propeller Directorate, Aircraft Certification Service, Federal Aviation Administration, 12 New England Executive Park, Burlington, MA 01803–5299, Fax: (781) 238–7199.

Operator/Repair Station _____
Aircraft Model _____
Aircraft S/N _____
Date of Inspection _____

Identify Operational Use (Estimate):

Take-off/Landings:
Water, % of Total ____
Land, % of Total ____
Parking
Water, % of Time ____
Land, % of Time ____

Note: Add additional pages for the following for each part inspected.
Part No. _____

Inspection

Dye Penetrant:
Pass ____
Fail ____
N/A ____

If a crack is found, indicate the approximate location on the part and the length of the crack in inches:

_____

_____

Part Time-In Service (TIS) (Hours):
Estimated ____
Actual ____
Unknown ____
At Retirement ____
Log Book entry for Part No. _____ , is(date) _____, at retirement hours _____.

Issued in Kansas City, Missouri, on September 29, 1999.

Michael K. Dahl,

Acting Manager, Small Airplane Directorate, Aircraft Certification Service.

[FR Doc. 99–25920 Filed 10–5–99; 8:45 am]

BILLING CODE 4910–13–U

DEPARTMENT OF TRANSPORTATION

Federal Aviation Administration

14 CFR Part 39

[Docket No. 99–NM–223–AD]

RIN 2120–AA64

Airworthiness Directives; Short Brothers Model SD3–60 SHERPA, SD3–SHERPA, and SD3–30 Series Airplanes

AGENCY: Federal Aviation Administration, DOT.

ACTION: Notice of proposed rulemaking (NPRM).

SUMMARY: This document proposes the adoption of a new airworthiness directive (AD) that is applicable to all Short Brothers Model SD3–60 SHERPA, SD3–SHERPA, and SD3–30 series airplanes. This proposal would require replacement of existing oxygen system ''O'' rings with improved wear-resistant ''O'' rings. This proposal is prompted by issuance of mandatory continuing airworthiness information by a foreign civil airworthiness authority. The actions specified by the proposed AD are intended to prevent the loss of oxygen from the aircraft oxygen system, which could result in an insufficient supply of oxygen being provided to the airplane flight crew and passengers in the event of an emergency.

DATES: Comments must be received by November 5, 1999.

ADDRESSES: Submit comments in triplicate to the Federal Aviation Administration (FAA), Transport Airplane Directorate, ANM–114, Attention: Rules Docket No. 99–NM–223–AD, 1601 Lind Avenue, SW., Renton, Washington 98055–4056. Comments may be inspected at this location between 9:00 a.m. and 3:00 p.m., Monday through Friday, except Federal holidays.

The service information referenced in the proposed rule may be obtained from Short Brothers, Airworthiness & Engineering Quality, P.O. Box 241, Airport Road, Belfast BT3 9DZ, Northern Ireland. This information may be examined at the FAA, Transport Airplane Directorate, 1601 Lind Avenue, SW., Renton, Washington.

FOR FURTHER INFORMATION CONTACT: Norman B. Martenson, Manager, International Branch, ANM–116, FAA, Transport Airplane Directorate, 1601 Lind Avenue, SW., Renton, Washington 98055–4056; telephone (425) 227–2110; fax (425) 227–1149.

SUPPLEMENTARY INFORMATION:

Comments Invited

Interested persons are invited to participate in the making of the proposed rule by submitting such written data, views, or arguments as they may desire. Communications shall identify the Rules Docket number and be submitted in triplicate to the address specified above. All communications received on or before the closing date for comments, specified above, will be considered before taking action on the proposed rule. The proposals contained in this notice may be changed in light of the comments received.

Comments are specifically invited on the overall regulatory, economic, environmental, and energy aspects of the proposed rule. All comments submitted will be available, both before and after the closing date for comments, in the Rules Docket for examination by interested persons. A report summarizing each FAA-public contact concerned with the substance of this proposal will be filed in the Rules Docket.

Commenters wishing the FAA to acknowledge receipt of their comments submitted in response to this notice must submit a self-addressed, stamped postcard on which the following statement is made: ''Comments to Docket Number 99–NM–223–AD.'' The postcard will be date stamped and returned to the commenter.

Availability of NPRMs

Any person may obtain a copy of this NPRM by submitting a request to the FAA, Transport Airplane Directorate, ANM–114, Attention: Rules Docket No. 99–NM–223–AD, 1601 Lind Avenue, SW., Renton, Washington 98055–4056.

Discussion

The Civil Aviation Authority (CAA), which is the airworthiness authority for the United Kingdom, recently notified the FAA that an unsafe condition may exist on all Short Brothers Model SD3–60 SHERPA, SD3–SHERPA, and SD3–30 series airplanes. The CAA advises that service experience has shown that certain ''O'' rings of the airplane oxygen system are prone to unexpected deterioration. This condition, if not corrected, could result in an insufficient supply of oxygen being provided to the airplane flight crew and passengers in the event of an emergency.

Explanation of Relevant Service Information

Short Brothers has issued Service Bulletins SD360 Sherpa–35–2, dated February 25, 1999 (for Model SD3–60 Sherpa series airplanes); SD3 Sherpa–35–3, Revision 1, dated May 5, 1999 (for

Model SD3 Sherpa series airplanes); and SD330–35–1, dated February 25, 1999 (for Model SD3–30 series airplanes). These service bulletins describe procedures for replacement of existing oxygen system ''O'' rings with improved wear-resistant ''O'' rings. Accomplishment of the actions specified in the service bulletins is intended to adequately address the identified unsafe condition. The CAA classified these service bulletins as mandatory and issued British airworthiness directives 007–02–99 (for Model SD3–60 Sherpa series airplanes), 006–02–99 (for Model SD3 Sherpa series airplanes), and 008–02–99 (for Model SD3–30 series airplanes), in order to assure the continued airworthiness of these airplanes in the United Kingdom.

FAA's Conclusions

These airplane models are manufactured in the United Kingdom and are type certificated for operation in the United States under the provisions of section 21.29 of the Federal Aviation Regulations (14 CFR 21.29) and the applicable bilateral airworthiness agreement. Pursuant to this bilateral airworthiness agreement, the CAA has kept the FAA informed of the situation described above. The FAA has examined the findings of the CAA, reviewed all available information, and determined that AD action is necessary for products of this type design that are certificated for operation in the United States.

Explanation of Requirements of Proposed Rule

Since an unsafe condition has been identified that is likely to exist or develop on other airplanes of the same type design registered in the United States, the proposed AD would require accomplishment of the actions specified in the service bulletins described previously.

Cost Impact

The FAA estimates that 62 airplanes of U.S. registry would be affected by this proposed AD, that it would take approximately 50 work hours per airplane to accomplish the proposed actions, and that the average labor rate is $60 per work hour. Required parts would be provided by the manufacturer at no cost to operators. Based on these figures, the cost impact of the proposed AD on U.S. operators is estimated to be $186,000, or $3,000 per airplane.

The cost impact figure discussed above is based on assumptions that no operator has yet accomplished any of the proposed requirements of this AD action, and that no operator would accomplish those actions in the future if this AD were not adopted.

Regulatory Impact

The regulations proposed herein would not have substantial direct effects on the States, on the relationship between the national government and the States, or on the distribution of power and responsibilities among the various levels of government. Therefore, in accordance with Executive Order 12612, it is determined that this proposal would not have sufficient federalism implications to warrant the preparation of a Federalism Assessment.

For the reasons discussed above, I certify that this proposed regulation (1) is not a ''significant regulatory action'' under Executive Order 12866; (2) is not a ''significant rule'' under the DOT Regulatory Policies and Procedures (44 FR 11034, February 26, 1979); and (3) if promulgated, will not have a significant economic impact, positive or negative, on a substantial number of small entities under the criteria of the Regulatory Flexibility Act. A copy of the draft regulatory evaluation prepared for this action is contained in the Rules Docket. A copy of it may be obtained by contacting the Rules Docket at the location provided under the caption **ADDRESSES**.

List of Subjects in 14 CFR Part 39

Air transportation, Aircraft, Aviation safety, Safety.

The Proposed Amendment

Accordingly, pursuant to the authority delegated to me by the Administrator, the Federal Aviation Administration proposes to amend part 39 of the Federal Aviation Regulations (14 CFR part 39) as follows:

PART 39—AIRWORTHINESS DIRECTIVES

1. The authority citation for part 39 continues to read as follows:

Authority: 49 U.S.C. 106(g), 40113, 44701.

§ 39.13 [Amended]

2. Section 39.13 is amended by adding the following new airworthiness directive:

Short Brothers PLC: Docket 99–NM–223–AD.

Applicability: All Model SD3–60 SHERPA, SD3–SHERPA, and SD3–30 series airplanes; certificated in any category.

Note 1: This AD applies to each airplane identified in the preceding applicability provision, regardless of whether it has been modified, altered, or repaired in the area subject to the requirements of this AD. For airplanes that have been modified, altered, or repaired so that the performance of the requirements of this AD is affected, the owner/operator must request approval for an alternative method of compliance in accordance with paragraph (c) of this AD. The request should include an assessment of the effect of the modification, alteration, or repair on the unsafe condition addressed by this AD; and, if the unsafe condition has not been eliminated, the request should include specific proposed actions to address it.

Compliance: Required as indicated, unless accomplished previously.

To prevent the loss of oxygen from the aircraft oxygen system, accomplish the following:

(a) Within 24 months after the effective date of this AD, replace oxygen system ''O'' rings, part number (P/N) MS28778, with improved wear-resistant ''O'' rings, P/N MS9068, in accordance with Shorts Service Bulletins SD360 Sherpa–35–2, dated February 25, 1999 (for Model SD3–60 Sherpa series airplanes); SD3 Sherpa–35–3, Revision 1, dated May 5, 1999 (for Model SD3 Sherpa series airplanes), and SD330–35–1, dated February 25, 1999 (for Model SD3–30 series airplanes); as applicable.

(b) As of the effective date of this AD, no person shall install an oxygen system ''O'' ring, P/N MS28778, on any airplane.

Alternative Methods of Compliance

(c) An alternative method of compliance or adjustment of the compliance time that provides an acceptable level of safety may be used if approved by the Manager, International Branch, ANM–116, FAA, Transport Airplane Directorate. Operators shall submit their requests through an appropriate FAA Principal Maintenance Inspector, who may add comments and then send it to the Manager, International Branch, ANM–116.

Note 2: Information concerning the existence of approved alternative methods of compliance with this AD, if any, may be obtained from the International Branch, ANM–116.

Special Flight Permits

(d) Special flight permits may be issued in accordance with sections 21.197 and 21.199 of the Federal Aviation Regulations (14 CFR 21.197 and 21.199) to operate the airplane to a location where the requirements of this AD can be accomplished.

Note 3: The subject of this AD is addressed in British airworthiness directives 007–02–99 (for Model SD3–60 Sherpa series airplanes), 006–02–99 (for Model SD3 Sherpa series airplanes), and 008–02–99 (for Model SD3–30 series airplanes).

Issued in Renton, Washington, on September 30, 1999.

D. L. Riggin,

Acting Manager, Transport Airplane Directorate, Aircraft Certification Service.

[FR Doc. 99–26087 Filed 10–5–99; 8:45 am]

BILLING CODE 4910–13–P

DEPARTMENT OF TRANSPORTATION

Federal Aviation Administration

14 CFR Part 39

[Docket No. 99–NM–226–AD]

RIN 2120–AA64

Airworthiness Directives; Short Brothers Model SD3–60 SHERPA, SD3–SHERPA, SD3–30, and SD3–60 Series Airplanes

AGENCY: Federal Aviation Administration, DOT.

ACTION: Notice of proposed rulemaking (NPRM).

SUMMARY: This document proposes the adoption of a new airworthiness directive (AD) that is applicable to all Short Brothers Model SD3–60 SHERPA, SD3–SHERPA, SD3–30, and SD3–60 series airplanes. This proposal would require replacement of the existing pneumatic de-icing boot pressure indicator switch with a newly designed switch. This proposal is prompted by an occurrence on a similar airplane model in which the pneumatic de-icing boot indication light may have provided the flightcrew with misleading information as to the proper functioning of the de-icing boots. The actions specified by the proposed AD are intended to prevent ice accumulation on the airplane leading edges, which could reduce controllability of the airplane.

DATES: Comments must be received by November 5, 1999.

ADDRESSES: Submit comments in triplicate to the Federal Aviation Administration (FAA), Transport Airplane Directorate, ANM–114, Attention: Rules Docket No. 99–NM–226–AD, 1601 Lind Avenue, SW., Renton, Washington 98055–4056. Comments may be inspected at this location between 9:00 a.m. and 3:00 p.m., Monday through Friday, except Federal holidays.

Information concerning this proposal may be examined at the FAA, Transport Airplane Directorate, 1601 Lind Avenue, SW., Renton, Washington.

FOR FURTHER INFORMATION CONTACT: Norman B. Martenson, Manager, International Branch, ANM–116, FAA, Transport Airplane Directorate, 1601 Lind Avenue, SW., Renton, Washington 98055–4056; telephone (425) 227–2110; fax (425) 227–1149.

SUPPLEMENTARY INFORMATION:

Comments Invited

Interested persons are invited to participate in the making of the proposed rule by submitting such written data, views, or arguments as they may desire. Communications shall identify the Rules Docket number and be submitted in triplicate to the address specified above. All communications received on or before the closing date for comments, specified above, will be considered before taking action on the proposed rule. The proposals contained in this notice may be changed in light of the comments received.

Comments are specifically invited on the overall regulatory, economic, environmental, and energy aspects of the proposed rule. All comments submitted will be available, both before and after the closing date for comments, in the Rules Docket for examination by interested persons. A report summarizing each FAA-public contact concerned with the substance of this proposal will be filed in the Rules Docket.

Commenters wishing the FAA to acknowledge receipt of their comments submitted in response to this notice must submit a self-addressed, stamped postcard on which the following statement is made: ''Comments to Docket Number 99–NM–226–AD.'' The postcard will be date stamped and returned to the commenter.

Availability of NPRMs

Any person may obtain a copy of this NPRM by submitting a request to the FAA, Transport Airplane Directorate, ANM–114, Attention: Rules Docket No. 99–NM–226–AD, 1601 Lind Avenue, SW., Renton, Washington 98055–4056.

Discussion

On December 26, 1989, a British Aerospace Jetstream Model BA–3101 series airplane impacted the ground approximately 400 feet short of the runway while executing an instrument landing system (ILS) approach. The accident occurred at the Tri-Cities Airport, Pasco, Washington. The National Transportation Safety Board (NTSB) determined that the probable cause of the accident was the flightcrew's decision to continue an unstabilized ILS approach that led to a stall, most likely of the horizontal stabilizer, and loss of control at low altitude. Contributing to the stall and loss of control was the accumulation of leading edge ice, which degraded the aerodynamic performance of the airplane.

One result of the NTSB investigation was the determination that the flight deck wing de-icing light illuminated at a lower pressure than the pressure required to fully inflate the de-icing boots. The premature illumination of the wing de-icing light was due to a failure within the wing de-icing boot system, which allowed sufficient air pressure to give the appearance of normal operation based on the de-icing light, without actually inflating the boots sufficiently to remove ice.

Based on an NTSB Safety Recommendation, the FAA reviewed the pneumatic de-icing boot system designs for airplanes operated under parts 121 and 135 of the Federal Aviation Regulations to ensure that the pneumatic pressure threshold at which each de-icing boot indication light is designed to illuminate is sufficient pressure for effective operation of the pneumatic de-icing boots. The FAA has determined that the flight deck pneumatic de-icing boot pressure indicator switch on all Short Brothers Model SD3–60 SHERPA, SD3–SHERPA, SD3–30, and SD3–60 series airplanes may allow the flight deck indication light to illuminate at a lower pressure [10 pounds per square inch gage (psig)] than the pressure required to fully inflate the de-icing boots (15 psig). This condition, if not corrected, could result in ice accumulation on the airplane leading edges, which could reduce controllability of the airplane.

FAA's Conclusions

These airplane models are manufactured in the United Kingdom and are type certificated for operation in the United States under the provisions of section 21.29 of the Federal Aviation Regulations (14 CFR 21.29) and the applicable bilateral airworthiness agreement. The FAA has determined that AD action is necessary for products of this type design that are certificated for operation in the United States.

Explanation of Requirements of Proposed Rule

Since an unsafe condition has been identified that is likely to exist or develop on other airplanes of the same type design registered in the United States, the proposed AD would require that the existing pneumatic de-icing boot pressure indicator switch be replaced with a switch that activates the indicator light at 15 psig. The action would be required in accordance with a method approved by the FAA.

Cost Impact

The FAA estimates that 89 airplanes of U.S. registry would be affected by this proposed AD. Since the manufacturer has not yet developed one specific modification commensurate with the requirements of this proposal, the FAA is unable at this time to provide specific information as to the number of work hours or cost of parts that would be

required to accomplish the proposed modification. As indicated earlier in this preamble, the FAA specifically invites the submission of comments and other data regarding the economic aspect of this proposal.

Regulatory Impact

The regulations proposed herein would not have substantial direct effects on the States, on the relationship between the national government and the States, or on the distribution of power and responsibilities among the various levels of government. Therefore, in accordance with Executive Order 12612, it is determined that this proposal would not have sufficient federalism implications to warrant the preparation of a Federalism Assessment.

For the reasons discussed above, I certify that this proposed regulation (1) is not a ''significant regulatory action'' under Executive Order 12866; (2) is not a ''significant rule'' under the DOT Regulatory Policies and Procedures (44 FR 11034, February 26, 1979); and (3) if promulgated, will not have a significant economic impact, positive or negative, on a substantial number of small entities under the criteria of the Regulatory Flexibility Act. A copy of the draft regulatory evaluation prepared for this action is contained in the Rules Docket. A copy of it may be obtained by contacting the Rules Docket at the location provided under the caption **ADDRESSES**.

List of Subjects in 14 CFR Part 39

Air transportation, Aircraft, Aviation safety, Safety.

The Proposed Amendment

Accordingly, pursuant to the authority delegated to me by the Administrator, the Federal Aviation Administration proposes to amend part 39 of the Federal Aviation Regulations (14 CFR part 39) as follows:

PART 39—AIRWORTHINESS DIRECTIVES

1. The authority citation for part 39 continues to read as follows:

Authority: 49 U.S.C. 106(g), 40113, 44701.

§ 39.13 [Amended]

2. Section 39.13 is amended by adding the following new airworthiness directive:

Short Brothers PLC: Docket 99–NM–226–AD.

Applicability: All Model SD3–60 SHERPA, SD3–SHERPA, SD3–30, and SD3–60 series airplanes; certificated in any category.

Note 1: This AD applies to each airplane identified in the preceding applicability provision, regardless of whether it has been modified, altered, or repaired in the area subject to the requirements of this AD. For airplanes that have been modified, altered, or repaired so that the performance of the requirements of this AD is affected, the owner/operator must request approval for an alternative method of compliance in accordance with paragraph (b) of this AD. The request should include an assessment of the effect of the modification, alteration, or repair on the unsafe condition addressed by this AD; and, if the unsafe condition has not been eliminated, the request should include specific proposed actions to address it.

Compliance: Required as indicated, unless accomplished previously.

To prevent ice accumulation on the airplane leading edges, which could reduce controllability of the airplane, accomplish the following:

Modification

(a) Within 1 year after the effective date of this AD, replace the flight deck pneumatic de-icing boot pressure indicator switch with a switch that activates the flight deck indicator light at 15 pounds per square inch gage, in accordance with a method approved by the Manager, International Branch, ANM–116, FAA, Transport Airplane Directorate.

Alternative Methods of Compliance

(b) An alternative method of compliance or adjustment of the compliance time that provides an acceptable level of safety may be used if approved by the Manager, International Branch, ANM–116. Operators shall submit their requests through an appropriate FAA Principal Maintenance Inspector, who may add comments and then send it to the Manager, International Branch, ANM–116.

Note 2: Information concerning the existence of approved alternative methods of compliance with this AD, if any, may be obtained from the International Branch, ANM–116.

Special Flight Permits

(c) Special flight permits may be issued in accordance with sections 21.197 and 21.199 of the Federal Aviation Regulations (14 CFR 21.197 and 21.199) to operate the airplane to a location where the requirements of this AD can be accomplished.

Issued in Renton, Washington, on September 30, 1999.

D.L. Riggin,

Acting Manager, Transport Airplane Directorate, Aircraft Certification Service.

[FR Doc. 99–26086 Filed 10–5–99; 8:45 am]

BILLING CODE 4910–13–P

DEPARTMENT OF TRANSPORTATION

Federal Aviation Administration

14 CFR Part 39

[Docket No. 99–NM–242–AD]

RIN 2120–AA64

Airworthiness Directives; Boeing Model 747–100, –200, 747SP, and 747SR Series; Airplanes Equipped With Pratt & Whitney JT9D–7, –7A, –7F, and –7J Series Engines

AGENCY: Federal Aviation Administration, DOT.

ACTION: Notice of proposed rulemaking (NPRM).

SUMMARY: This document proposes the adoption of a new airworthiness directive (AD) that is applicable to certain Boeing Model 747–100, –200, 747SP, and 747SR series airplanes. This proposal would require one-time detailed visual and eddy current inspections to detect cracking of the nose cowl mounting flange; rework of the nose cowl mounting flange; eddy current inspection to detect cracking of the reworked nose cowl mounting flange; and corrective action, if necessary. This proposal is prompted by reports of the nose cowl separating from the engine and departing the airplane following severe engine vibration. The actions specified by the proposed AD are intended to prevent separation of the nose cowl from the engine, which could cause collateral damage to the airplane, and, possibly, reduced controllability of the airplane.

DATES: Comments must be received by November 22, 1999.

ADDRESSES: Submit comments in triplicate to the Federal Aviation Administration (FAA), Transport Airplane Directorate, ANM–114, Attention: Rules Docket No. 99–NM–242–AD, 1601 Lind Avenue, SW., Renton, Washington 98055–4056. Comments may be inspected at this location between 9:00 a.m. and 3:00 p.m., Monday through Friday, except Federal holidays.

The service information referenced in the proposed rule may be obtained from Boeing Commercial Airplane Group, P.O. Box 3707, Seattle, Washington 98124–2207. This information may be examined at the FAA, Transport Airplane Directorate, 1601 Lind Avenue, SW., Renton, Washington.

FOR FURTHER INFORMATION CONTACT: Dionne Stanley, Aerospace Engineer, Propulsion Branch, ANM–140S, FAA,

Transport Airplane Directorate, Seattle Aircraft Certification Office, 1601 Lind Avenue, SW., Renton, Washington 98055–4056; telephone (425) 227–2250; fax (425) 227–1181.

SUPPLEMENTARY INFORMATION:

Comments Invited

Interested persons are invited to participate in the making of the proposed rule by submitting such written data, views, or arguments as they may desire. Communications shall identify the Rules Docket number and be submitted in triplicate to the address specified above. All communications received on or before the closing date for comments, specified above, will be considered before taking action on the proposed rule.

The proposals contained in this notice may be changed in light of the comments received.

Comments are specifically invited on the overall regulatory, economic, environmental, and energy aspects of the proposed rule. All comments submitted will be available, both before and after the closing date for comments, in the Rules Docket for examination by interested persons. A report summarizing each FAA-public contact concerned with the substance of this proposal will be filed in the Rules Docket.

Commenters wishing the FAA to acknowledge receipt of their comments submitted in response to this notice must submit a self-addressed, stamped postcard on which the following statement is made: ''Comments to Docket Number 99–NM–242–AD.'' The postcard will be date stamped and returned to the commenter.

Availability of NPRMs

Any person may obtain a copy of this NPRM by submitting a request to the FAA, Transport Airplane Directorate, ANM–114, Attention: Rules Docket No. 99–NM–242–AD, 1601 Lind Avenue, SW., Renton, Washington 98055–4056.

Discussion

The FAA has received reports indicating that, on certain Boeing Model 747 series airplanes equipped with certain Pratt & Whitney JT9D series engines, the nose cowl has separated from the engine and departed the airplane following severe engine vibration.

The severe engine vibration was caused by engine damage resulting from bird or foreign object ingestion. Separation of the nose cowl from the engine, if not corrected, could cause collateral damage to the airplane, and, possibly, reduced controllability of the airplane.

Explanation of Relevant Service Information

The FAA has reviewed and approved Boeing Service Bulletin 747–71–2290, dated March 18, 1999, which describes procedures for one-time detailed visual and eddy current inspections to detect cracking of the existing nose cowl mounting flange; rework of the nose cowl mounting flange to increase the number of attachment fastener holes from 37 to 67; and a one-time eddy current inspection to detect cracking of the new fastener holes in the reworked nose cowl mounting flange. Accomplishment of the actions specified in the service bulletin is intended to adequately address the identified unsafe condition.

Explanation of Requirements of Proposed Rule

Since an unsafe condition has been identified that is likely to exist or develop on other products of this same type design, the proposed AD would require accomplishment of the actions specified in the service bulletin described previously, except as discussed below. If any cracking is found during any inspection, corrective actions would be required to be accomplished in accordance with a method approved by the FAA.

Differences Between Proposed Rule and Service Bulletin

Operators should note that the service bulletin does not recommend any compliance time for accomplishing the nose cowl inspections and rework. In developing an appropriate compliance time for this AD, the FAA considered the degree of urgency associated with addressing the subject unsafe condition, the average utilization of the affected fleet, and the time necessary to perform the inspections and rework. In light of all of these factors, the FAA finds a 24-month compliance time for initiating the required actions to be warranted, in that it represents an appropriate interval of time allowable for affected airplanes to continue to operate without compromising safety.

Cost Impact

There are approximately 257 airplanes of the affected design in the worldwide fleet. The FAA estimates that 106 airplanes of U.S. registry would be affected by this proposed AD, that it would take approximately 19 work hours per airplane to accomplish the proposed actions, and that the average labor rate is $60 per work hour. Required parts would cost approximately $500 per airplane. Based on these figures, the cost impact of the proposed AD on U.S. operators is estimated to be $173,840, or $1,640 per airplane.

The cost impact figure discussed above is based on assumptions that no operator has yet accomplished any of the proposed requirements of this AD action, and that no operator would accomplish those actions in the future if this AD were not adopted.

Regulatory Impact

The regulations proposed herein would not have substantial direct effects on the States, on the relationship between the national government and the States, or on the distribution of power and responsibilities among the various levels of government.

Therefore, in accordance with Executive Order 12612, it is determined that this proposal would not have sufficient federalism implications to warrant the preparation of a Federalism Assessment.

For the reasons discussed above, I certify that this proposed regulation (1) is not a ''significant regulatory action'' under Executive Order 12866; (2) is not a ''significant rule'' under the DOT Regulatory Policies and Procedures (44 FR 11034, February 26, 1979); and (3) if promulgated, will not have a significant economic impact, positive or negative, on a substantial number of small entities under the criteria of the Regulatory Flexibility Act. A copy of the draft regulatory evaluation prepared for this action is contained in the Rules Docket. A copy of it may be obtained by contacting the Rules Docket at the location provided under the caption **ADDRESSES.**

List of Subjects in 14 CFR Part 39

Air transportation, Aircraft, Aviation safety, Safety.

The Proposed Amendment

Accordingly, pursuant to the authority delegated to me by the Administrator, the Federal Aviation Administration proposes to amend part 39 of the Federal Aviation Regulations (14 CFR part 39) as follows:

PART 39—AIRWORTHINESS DIRECTIVES

1. The authority citation for part 39 continues to read as follows:

Authority: 49 U.S.C. 106(g), 40113, 44701.

§ 39.13 [Amended]

2. Section 39.13 is amended by adding the following new airworthiness directive:

Boeing: Docket 99–NM–242–AD.

Applicability: Model 747–100, –200, 747SP, and 747SR series airplanes; certificated in any category; equipped with Pratt & Whitney JT9D–7, –7A, –7F and –7J series engines.

Note 1: This AD applies to each airplane identified in the preceding applicability provision, regardless of whether it has been modified, altered, or repaired in the area subject to the requirements of this AD. For airplanes that have been modified, altered, or repaired so that the performance of the requirements of this AD is affected, the owner/operator must request approval for an alternative method of compliance in accordance with paragraph (d) of this AD. The request should include an assessment of the effect of the modification, alteration, or repair on the unsafe condition addressed by this AD; and, if the unsafe condition has not been eliminated, the request should include specific proposed actions to address it.

Compliance: Required as indicated, unless accomplished previously.

To prevent separation of the nose cowl from the engine, which could cause collateral damage to the airplane, and, possibly, reduced controllability of the airplane, accomplish the following:

One-Time Inspections and Rework

(a) Within 24 months after the effective date of this AD, perform one-time detailed visual and eddy current inspections to detect cracking of the existing nose cowl mounting flange, rework the nose cowl mounting flange to increase the number of attachment fastener holes from 37 to 67, and perform a one-time eddy current inspection to detect cracking of the new fastener holes in the reworked nose cowl mounting flange, in accordance with the Accomplishment Instructions of Boeing Service Bulletin 747–71–2290, dated March 18, 1999.

Note 2: For the purposes of this AD, a detailed visual inspection is defined as ''An intensive visual examination of a specific structural area, system, installation, or assembly to detect damage, failure, or irregularity. Available lighting is normally supplemented with a direct source of good lighting at intensity deemed appropriate by the inspector. Inspection aids such as mirror, magnifying lenses, etc., may be used. Surface cleaning and elaborate access procedures may be required.''

Corrective Action

(b) If any crack is found during any inspection required by paragraph (a) of this AD: Prior to further flight, repair in accordance with a method approved by the Manager, Seattle Aircraft Certification Office (ACO), FAA, Transport Airplane Directorate.

(c) As of the effective date of this AD, no person shall install a nose cowl on any airplane, unless it has been inspected and modified in accordance with paragraph (a) of this AD.

Alternative Methods of Compliance

(d) An alternative method of compliance or adjustment of the compliance time that provides an acceptable level of safety may be used if approved by the Manager, Seattle ACO. Operators shall submit their requests through an appropriate FAA Principal Maintenance Inspector, who may add comments and then send it to the Manager, Seattle ACO.

Note 3: Information concerning the existence of approved alternative methods of compliance with this AD, if any, may be obtained from the Seattle ACO.

Special Flight Permits

(e) Special flight permits may be issued in accordance with §§ 21.197 and 21.199 of the Federal Aviation Regulations (14 CFR 21.197 and 21.199) to operate the airplane to a location where the requirements of this AD can be accomplished.

Issued in Renton, Washington, on September 30, 1999.

D.L. Riggin,

Acting Manager, Transport Airplane Directorate, Aircraft Certification Service.

[FR Doc. 99–26085 Filed 10–5–99; 8:45 am]

BILLING CODE 4910–13–U

DEPARTMENT OF TRANSPORTATION

Federal Aviation Administration

14 CFR Part 39

[Docket No. 99–CE–59–AD]

RIN 2120–AA64

Airworthiness Directives; Fairchild Aircraft, Inc. SA226 and SA227 Series Airplanes

AGENCY: Federal Aviation Administration, DOT.

ACTION: Notice of proposed rulemaking (NPRM).

SUMMARY: This document proposes to supersede Airworthiness Directive (AD) 97–23–01, which currently requires the following on Fairchild Aircraft, Inc. (Fairchild Aircraft) SA226 and SA227 series airplanes that are equipped with a certain Simmonds-Precision pitch trim actuator or a certain Barbar-Colman pitch trim actuator: repetitively measuring the freeplay of the pitch trim actuator and repetitively inspecting the actuator for rod slippage; immediately replacing any actuator if certain freeplay limitations are exceeded or rod slippage is evident; and eventually replacing the actuator regardless of the inspection results. The proposed AD would retain the actions of AD 97–23–01, but would add these requirements on airplanes with different design pitch trim actuators installed. The proposed AD is the result of the manufacturer developing different design pitch trim actuators and the Federal Aviation Administration (FAA) determining that these actuators should be subject to the actions of AD 97–23–01. The actions specified by the proposed AD are intended to detect excessive freeplay or rod slippage in the pitch trim actuator, which, if not detected and corrected, could result in pitch trim actuator failure and possible loss of control of the airplane.

DATES: Comments must be received on or before December 6, 1999.

ADDRESSES: Submit comments in triplicate to the FAA, Central Region, Office of the Regional Counsel, Attention: Rules Docket No. 99–CE–59–AD, Room 1558, 601 E. 12th Street, Kansas City, Missouri 64106. Comments may be inspected at this location between 8 a.m. and 4 p.m., Monday through Friday, holidays excepted.

Service information that applies to the proposed AD may be obtained from Field Support Engineering, Fairchild Aircraft, Inc., P.O. Box 790490, San Antonio, Texas 78279–0490; telephone: (210) 824–9421; facsimile: (210) 820–8609. This information also may be examined at the Rules Docket at the address above.

FOR FURTHER INFORMATION CONTACT: Mr. Werner Koch, Aerospace Engineer, FAA, Airplane Certification Office, 2601 Meacham Boulevard, Fort Worth, Texas 76193–0150; telephone: (817) 222–5133; facsimile: (817) 222–5960.

SUPPLEMENTARY INFORMATION:

Comments Invited

Interested persons are invited to participate in the making of the proposed rule by submitting such written data, views, or arguments as they may desire. Communications should identify the Rules Docket number and be submitted in triplicate to the address specified above. All communications received on or before the closing date for comments, specified above, will be considered before taking action on the proposed rule. The proposals contained in this notice may be changed in light of the comments received.

Comments are specifically invited on the overall regulatory, economic, environmental, and energy aspects of the proposed rule. All comments submitted will be available, both before and after the closing date for comments, in the Rules Docket for examination by interested persons. A report that summarizes each FAA-public contact concerned with the substance of this proposal will be filed in the Rules Docket.

Commenters wishing the FAA to acknowledge receipt of their comments submitted in response to this notice must submit a self-addressed, stamped postcard on which the following statement is made: ''Comments to Docket No. 99–CE–59–AD.'' The postcard will be date stamped and returned to the commenter.

Availability of NPRMs

Any person may obtain a copy of this NPRM by submitting a request to the FAA, Central Region, Office of the Regional Counsel, Attention: Rules Docket No. 99–CE–59–AD, Room 1558, 601 E. 12th Street, Kansas City, Missouri 64106.

Discussion

AD 97–23–01, Amendment 39–10188 (62 FR 5922, November 3, 1997), currently requires the following on Fairchild Aircraft SA226 and SA227 series airplanes that are equipped with a certain Simmonds-Precision pitch trim actuator:

—Repetitively measuring the freeplay of the pitch trim actuator and repetitively inspecting the actuator for rod slippage;

—Immediately replacing any actuator if certain freeplay limitations are exceeded or rod slippage is evident; and

—Eventually replacing the actuator regardless of the inspection results.

The actions specified by AD 97–23–01 are intended to detect excessive freeplay or rod slippage in the pitch trim actuator, which, if not detected and corrected, could result in pitch trim actuator failure and possible loss of control of the airplane.

In addition, AD 98–19–15, Amendment 39–10794 (63 FR 50983, September 24, 1998), currently requires incorporating the following information into the applicable Airplane Flight Manual (AFM) on Fairchild SA226 and SA227 airplanes that are equipped with Barber-Colman pitch trim actuators, P/N 27–19008–001/–004 or P/N 27–19008–002/–005 (these pitch trim actuators are affected by AD 97–23–01):

- ''Limit the maximum indicated airspeed to maneuvering airspeed (Va) as shown in the appropriate airplane flight manual (AFM).''

and

- ''The minimum crew required is two pilots.''

Actions Since Issuance of AD 97–23–01

At the time the FAA issued AD 98–19–15, there was a design alternative to the Barber-Colman pitch trim actuators for all of the affected airplanes, except for the Models SA227–CC and SA227–DC airplanes. Since that time, a design alternative for all affected airplanes has been developed. These design alternatives are:

—Barber-Colman P/N 27–19008–006 or P/N 27–19008–007 pitch trim actuators. Procedures to install these pitch trim actuators are contained in Fairchild Service Bulletin 226–27–064, Fairchild Service Bulletin 227–27–046, and Fairchild Service Bulletin CC7–27–015. All airplane models are eligible for this installation and airplane models vary by service bulletin;

—Simmonds-Precision P/N DL5040M5 or P/N DL5040M6 pitch trim actuators. All airplane models are eligible for this installation. Procedures to install these pitch trim actuators for the Models SA227–CC and SA227–DC airplanes are contained in Fairchild Service Bulletin CC7–27–014, and are contained in engineering data for all other models (contact Fairchild); and

—Simmonds-Precision P/N DL5040M8 pitch trim actuators. Procedures to install these pitch trim actuators are contained in Fairchild Service Bulletin 227–27–045, Fairchild Service Bulletin 226–27–063, and Fairchild Service Bulletin CC7–23–013. All airplane models are eligible for this installation and airplane models vary by service bulletin.

These pitch trim actuators, when installed, would eliminate the need for the requirements of AD 98–19–15.

However, there currently are no AD requirements that mandate repetitive inspections and/or replacements or overhauls of these pitch trim actuators similar to the pitch trim actuators affected by AD 97–23–01. The FAA evaluated the design of these improved pitch trim actuators and has determined that (1) a similar condition to that specified in AD 97–23–01 exists for airplanes with these actuators installed; and (2) the actuators should have inspections and/or replacements or overhauls as follows:

—*Barber-Colman P/N 27–19008–006 or P/N 27–19008–007 pitch trim actuators:* Overhaul at intervals not to exceed 2,000 hours time-in-service (TIS);

—*Simmonds-Precision P/N DL5040M5 or P/N DL5040M6 pitch trim actuators:* Replacement at intervals not to exceed 1,500 hours TIS; and

—*Simmonds-Precision P/N DL5040M8 pitch trim actuators:* Initial inspection at 7,500 hours TIS after installation and thereafter at intervals not to exceed 600 hours TIS. Repetitive replacement at intervals not to exceed 9,900 hours TIS.

Relevant Service Information

Fairchild has revised SA226 Series Service Letter (SL) 226–SL–005 and Fairchild Aircraft SA227 Series SL 227–SL–011, both Revised: August 3, 1999; and issued SA227 Series SL CC7–SL–028, Issued: August 12, 1999, to also include the inspection procedures on the P/N DL5040M8 pitch trim actuators.

The FAA's Determination

After examining the circumstances and reviewing all available information related to the incidents described above, the FAA has determined that:

—The improved design pitch trim actuators referenced above should also have repetitive inspection and/or overhaul or replacement requirements; and

—AD action should be taken to detect excessive freeplay or rod slippage in the pitch trim actuator, which, if not detected and corrected, could result in pitch trim actuator failure and possible loss of control of the airplane.

Explanation of the Provisions of the Proposed AD

Since an unsafe condition has been identified that is likely to exist or develop in other Fairchild Aircraft SA226 and SA227 series airplanes of the same type design that are equipped with a certain Simmonds-Precision pitch trim actuator, the FAA is proposing an AD to supersede AD 97–23–01. The proposed AD would retain the actions of AD 97–23–01, but would add these requirements on airplanes with the improved design pitch trim actuators installed.

Cost Impact

The FAA estimates that 508 airplanes in the U.S. registry would be affected by the proposed AD. The only cost impact that the proposed AD imposes upon the public over that already required by AD 97–23–01 is that incurred through the addition of the proposed requirements on airplanes with the improved design pitch trim actuators installed. The costs of the proposed AD on those airplanes that have these improved design pitch trim actuators incorporated would be less than that already required by AD 97–23–01 on airplanes with other pitch trim actuators installed.

Regulatory Impact

The regulations proposed herein would not have substantial direct effects on the States, on the relationship between the national government and the States, or on the distribution of power and responsibilities among the various levels of government. Therefore, in accordance with Executive Order

12612, it is determined that this proposal would not have sufficient federalism implications to warrant the preparation of a Federalism Assessment.

For the reasons discussed above, I certify that this action: (1) Is not a ''significant regulatory action'' under Executive Order 12866; (2) is not a ''significant rule'' under DOT Regulatory Policies and Procedures (44 FR 11034, February 26, 1979); and (3) if promulgated, will not have a significant economic impact, positive or negative, on a substantial number of small entities under the criteria of the Regulatory Flexibility Act. A copy of the draft regulatory evaluation prepared for this action has been placed in the Rules Docket. A copy of it may be obtained by contacting the Rules Docket at the location provided under the caption **ADDRESSES**.

List of Subjects in 14 CFR Part 39

Air transportation, Aircraft, Aviation safety, Safety.

The Proposed Amendment

Accordingly, pursuant to the authority delegated to me by the Administrator, the Federal Aviation Administration proposes to amend 14 CFR part 39 of the Federal Aviation Regulations as follows:

PART 39—AIRWORTHINESS DIRECTIVES

1. The authority citation for part 39 continues to read as follows:

Authority: 49 U.S.C. 106(g), 40113, 44701.

§ 39.13 [Amended]

2. Section 39.13 is amended by removing Airworthiness Directive (AD) 97–23–01, Amendment 39–10188 (62 FR 5922, November 3, 1997), and by adding a new AD to read as follows:

Fairchild Aircraft, Inc.: Docket No. 99–CE–59–AD; Supersedes AD 97–23–01, Amendment 39–10188; which superseded AD 93–15–02 R2, Amendment 39–9689; which revised AD 93–15–02 R1, Amendment 39–9180; which revised AD 93–15–02, Amendment 39–8648.

Applicability: All SA226 and SA227 series airplanes (all models and serial numbers), certificated in any category.

Note 1: This AD applies to each airplane identified in the preceding applicability provision, regardless of whether it has been modified, altered, or repaired in the area subject to the requirements of this AD. For airplanes that have been modified, altered, or repaired so that the performance of the requirements of this AD is affected, the owner/operator must request approval for an alternative method of compliance in accordance with paragraph (d) of this AD. The request should include an assessment of the effect of the modification, alteration, or repair on the unsafe condition addressed by this AD; and, if the unsafe condition has not been eliminated, the request should include specific proposed actions to address it.

Compliance: Required as indicated in the body of this AD, unless already accomplished.

To detect excessive freeplay or rod slippage in the pitch trim actuator, which, if not detected and corrected, could result in pitch trim actuator failure and possible loss of control of the airplane, accomplish the following:

Note 2: The paragraph structure of this AD is as follows:

Level 1: (a), (b), (c), etc.
Level 2: (1), (2), (3), etc.
Level 3: (i), (ii), (iii), etc.

Level 2 and Level 3 structures are designations of the Level 1 paragraph they immediately follow.

(a) Accomplish the following at the times specified in the chart in paragraph (b) of this AD:

(1) Initial and repetitive inspections:

(i) For airplanes equipped with a Simmonds-Precision actuator, P/N DL5040M5, P/N DL5040M6, or P/N DL5040M8, measure the freeplay (inspection) of the pitch trim actuator and inspect the actuator for rod slippage in accordance with the INSTRUCTIONS section of Fairchild Aircraft SA226 Series Service Letter (SL) 226–SL–005, or Fairchild Aircraft SA227 Series SL 227–SL–011, both Revised: August 3, 1999; or Fairchild Aircraft SA227 Series Service Letter CC7–SL–028, Issued: August 12, 1999, as applicable.

(ii) For airplanes equipped with Barber-Colman actuators, P/N 27–19008–00–001, P/N 27–19008–002, P/N 27–19008–00–004, or P/N 27–19008–005, conduct a functional inspection of the actuator in accordance with the INSTRUCTIONS section of Fairchild Aircraft SL 226–SL–014, 227–SL–031, or CC7–SL–021, Issued: October 3, 1997, Revised: February 1, 1999, whichever is applicable.

Note 3: The actions in this AD are the same as the actions in AD 97–23–01, except for the actions added to the airplanes equipped with improved design pitch trim actuators.

(2) *Initial and repetitive replacements:* Replace the pitch trim actuator with any of the pitch trim actuators presented in the Chart in paragraph (b) of this AD, as applicable, at the time specified in the Repetitive Replacement column of this chart. However, if certain freeplay limitations that are specified in the service letters are exceeded or if rod slippage is found, prior to further flight, replace the pitch trim actuator.

(b) The following chart presents the pitch trim actuator that could be installed and the initial and repetitive inspection and replacement compliance times of this AD:

Condition	Initial inspection	Repetitive inspection	Repetitive replacement
For all affected airplane models, except for the Models SA227–CC and SA227–DC, with an original Simmonds-Precision actuator, P/N DL5040M5, installed.	Upon accumulating 3,000 hours TIS on a Simmonds-Precision P/N DL5040M5 actuator or within 50 hours TIS after April 17, 1995 (the effective date of AD 93–15–02 R1), whichever occurs later.	Every 250 hours TIS after the initial inspection until accumulating 5,000 hours TIS on the actuator or 500 hours TIS after the last inspection required by AD 93–15–02 R1, whichever occurs later.	Initially upon accumulating 5,000 hours TIS on the actuator or 500 hours TIS after the initial inspection, whichever occurs later, and thereafter as indicated below.
For all affected airplane models, except for the Models SA227–CC and SA227–DC, with a replacement Simmonds-Precision actuator, P/N DL5040M5, installed.	Initially upon accumulating 5,000 hours TIS on the new actuator or within 50 hours TIS after April 17, 1995 (the effective date of AD 93–15–02 R1), whichever occurs later.	Every 300 hours TIS after the initial inspection until accumulating 6,500 hours TIS on the actuator.	Upon accumulating 6,500 hours TIS on the actuator.
For all affected airplane models, except for the Models SA227–CC and SA227–DC, with a replacement Simmonds-Precision actuator, P/N DL5040M6, installed. This part can be new, modified from a P/N DL5040M5 actuator, or overhauled or overhauled and zero-timed.	Initially upon accumulating 7,500 hours TIS on the new or modified actuator or within 50 hours TIS after April 17, 1995 (the effective date of AD 93–15–02 R1), whichever occurs later.	Every 300 hours TIS after the initial inspection until accumulating 9,900 hours TIS on the actuator.	Upon accumulating 9,900 hours TIS on the actuator.

Condition	Initial inspection	Repetitive inspection	Repetitive replacement
For all affected airplane models, except for the Models SA227–CC and SA227–DC, with a replacement Simmonds-Precision actuator, P/N DL5040M5, installed that was overhauled and zero-timed where both nut assemblies, P/N AA56142, were replaced with new assemblies during overhaul.	Initially upon accumulating 5,000 hours TIS on the over-hauled actuator or within 50 hours TIS after April 17, 1995 (the effective date of AD 93–15–02 R1), whichever occurs later.	Every 300 hours TIS after the initial inspection until accumulating 6,500 hours TIS on the actuator.	Upon accumulating 6,500 hours TIS on the actuator.
For all affected airplane models, except for the Models SA227–CC and SA227–DC, with a replacement P/N DL5040M5 actuator installed that was overhauled and zero-timed where both nut assemblies, P/N AA56142, were not replaced with new assemblies during overhaul.	Initially upon accumulating 3,000 hours TIS on the over-hauled actuator or within 50 hours TIS after April 17, 1995 (the effective date of AD 93–15–02 R1), whichever occurs later.	Every 250 hours TIS after the initial inspection until accumulating 5,000 hours TIS on the actuator.	Upon accumulating 5,000 hours TIS on the actuator.
For all affected airplanes models with a Barber-Colman pitch trim actuator installed, P/N 27–19008–001/004 or 27–19008–002/–005, that is currently in-service with less than 1,000 hours TIS since new or overhauled and zero-timed.	Upon accumulating 500 hours total TIS on the new or overhauled zero-timed pitch trim actuator or within 50 hours TIS after the effective date of this AD, whichever occurs later.	Every 300 hours TIS after the initial inspection.	None.
For all affected airplane models with a newly fabricated and over-hauled and zero-timed Barber-Colman actuator, P/N 27–19008–001/–004 or P/N 27–19008–02–005.	Upon accumulating 500 hours total TIS on the actuator or within 50 hours TIS after the effective date of this AD, whichever occurs later.	Every 300 hours TIS after the initial inspection.	None.
For the Models SA227–CC and SA227–DC only, with a Simmonds-Precision pitch trim actuator, P/N DL5040M5 or P/N DL5040M6, installed.	None	None	Upon accumulating 1,500 hours TIS on the actuator.
For all affected airplanes with a Barber-Colman P/N 27–19008–006 or 27–19008–007 actuator installed.	Must be overhauled upon the accumulation of 2,000 hours TIS on the actuator.	Must be overhauled at intervals not to exceed 2,000 hours TIS.	No replacement requirements.
For all affected airplanes with a Simmonds-Precision pitch trim actuator, P/N DL5040M8, installed.	Upon accumulating 7,500 hours TIS on the actuator or within the next 50 hours TIS after the effective date of this AD, whichever occurs later.	Every 600 hours TIS after the initial inspection until accumulating 9,900 hours TIS.	Upon accumulating 9,900 hours TIS on the actuator.

(c) Special flight permits may be issued in accordance with sections 21.197 and 21.199 of the Federal Aviation Regulations (14 CFR 21.197 and 21.199) to operate the airplane to a location where the requirements of this AD can be accomplished.

(d) An alternative method of compliance or adjustment of the initial or repetitive compliance times that provides an equivalent level of safety may be approved by the Manager, Airplane Certification Office (ACO), FAA, 2601 Meacham Boulevard, Fort Worth, Texas 76193–0150.

(1) The request shall be forwarded through an appropriate FAA Maintenance Inspector, who may add comments and then send it to the Manager, Fort Worth Airplane Certification Office.

(2) Alternative methods of compliance that were approved in accordance with AD 97–23–01 are considered to be approved as alternative methods of compliance with this AD.

Note 4: Information concerning the existence of approved alternative methods of compliance with this AD, if any, may be obtained from the Fort Worth Airplane Certification Office.

(e) Service information related to this AD may be obtained from Field Support Engineering, Fairchild Aircraft Inc., P.O. Box 790490, San Antonio, Texas 78279–0490. Copies may be inspected at the FAA, Central Region, Office of the Regional Counsel, Room 1558, 601 E. 12th Street, Kansas City, Missouri.

(f) This amendment supersedes 97–23–01, Amendment 39–10188; which superseded AD 93–15–02 R2, Amendment 39–9689; which revised AD 93–15–02 R1, Amendment 39–9180; which revised AD 93–15–02, Amendment 39–8648.

Issued in Kansas City, Missouri, on September 30, 1999.

Marvin R. Nuss,

Acting Manager, Small Airplane Directorate, Aircraft Certification Service.

[FR Doc. 99–26090 Filed 10–5–99; 8:45 am]

BILLING CODE 4910–13–U

DEPARTMENT OF TRANSPORTATION

Federal Aviation Administration

14 CFR Part 39

[Docket No. 99–NM–75–AD]

RIN 2120–AA64

Airworthiness Directives; Boeing Model 727 Series Airplanes

AGENCY: Federal Aviation Administration, DOT.

ACTION: Notice of proposed rulemaking (NPRM).

SUMMARY: This document proposes the supersedure of an existing airworthiness directive (AD), applicable to certain Boeing Model 727 series airplanes, that currently requires repetitive inspections to detect cracking of the rear spar web or fuel leakage of the wing center section, and repair, if necessary. That action also provides for an optional modification of the rear spar web that constitutes terminating action for the repetitive inspections. That action was prompted by several reports of fuel leakage due to cracking of the rear spar web of the wing center section. This action would require accomplishment of the previously optional terminating action. The actions specified by the proposed AD are intended to prevent cracking of the rear spar web, which could permit fuel leakage into the airflow multiplier, and could result in an electrical short that could cause a fire.

DATES: Comments must be received by November 22, 1999.

ADDRESSES: Submit comments in triplicate to the Federal Aviation Administration (FAA), Transport Airplane Directorate, ANM–114, Attention: Rules Docket No. 99–NM–75–AD, 1601 Lind Avenue, SW., Renton, Washington 98055–4056. Comments may be inspected at this location between 9:00 a.m. and 3:00 p.m., Monday through Friday, except Federal holidays.

The service information referenced in the proposed rule may be obtained from Boeing Commercial Airplane Group, P.O. Box 3707, Seattle, Washington 98124–2207. This information may be examined at the FAA, Transport Airplane Directorate, 1601 Lind Avenue, SW., Renton, Washington.

FOR FURTHER INFORMATION CONTACT: Walter Sippel, Aerospace Engineer, Airframe Branch, ANM–120S, FAA, Transport Airplane Directorate, Seattle Aircraft Certification Office, 1601 Lind Avenue, SW., Renton, Washington 98055–4056; telephone (425) 227–2774; fax (425) 227–1181.

SUPPLEMENTARY INFORMATION:

Comments Invited

Interested persons are invited to participate in the making of the proposed rule by submitting such written data, views, or arguments as they may desire. Communications shall identify the Rules Docket number and be submitted in triplicate to the address specified above. All communications received on or before the closing date for comments, specified above, will be considered before taking action on the proposed rule. The proposals contained in this notice may be changed in light of the comments received.

Comments are specifically invited on the overall regulatory, economic, environmental, and energy aspects of the proposed rule. All comments submitted will be available, both before and after the closing date for comments, in the Rules Docket for examination by interested persons. A report summarizing each FAA-public contact concerned with the substance of this proposal will be filed in the Rules Docket.

Commenters wishing the FAA to acknowledge receipt of their comments submitted in response to this notice must submit a self-addressed, stamped postcard on which the following statement is made: ''Comments to Docket Number 99–NM–75–AD.'' The postcard will be date stamped and returned to the commenter.

Availability of NPRMs

Any person may obtain a copy of this NPRM by submitting a request to the FAA, Transport Airplane Directorate, ANM–114, Attention: Rules Docket No. 99–NM–75–AD, 1601 Lind Avenue, SW., Renton, Washington 98055–4056.

Discussion

On December 3, 1997, the FAA issued AD 97–25–15, amendment 39–10239 (62 FR 65355, December 12, 1997), applicable to certain Boeing Model 727 series airplanes, to require repetitive inspections to detect cracking of the rear spar web or fuel leakage of the wing center section, and repair, if necessary. That action also provides for an optional modification of the rear spar web that constitutes terminating action for the repetitive inspections. That action was prompted by several reports of fuel leakage due to cracking of the rear spar web of the wing center section. The requirements of that AD are intended to detect and correct such cracking of the rear spar web, which could permit fuel leakage into the airflow multiplier, and could result in an electrical short that could cause a fire.

Actions Since Issuance of Previous Rule

When AD 97–25–15 was issued, it contained a provision for the optional modification of the rear spar web, which, if accomplished, would constitute terminating action for the repetitive inspections required by that AD. In the preamble to AD 97–25–15, the FAA indicated that the actions required by that AD were considered ''interim action'' and that further rulemaking action was being considered to require the modification of the rear spar web of the wing center section. The FAA now has determined that further rulemaking action is indeed necessary, and this proposed AD follows from that determination.

Explanation of Relevant Service Information

The FAA has reviewed and approved Boeing Service Bulletin 727–57A0182, Revision 1, dated February 25, 1999. The procedures described in Revision 1 are essentially similar to those described in the original issue of the service bulletin, which was referenced as the appropriate source of service information for the actions in AD 97–25–15. Accomplishment of the modification specified in the service bulletin is intended to adequately address the identified unsafe condition.

Explanation of Requirements of Proposed Rule

Since an unsafe condition has been identified that is likely to exist or develop on other products of this same type design, the proposed AD would supersede AD 97–25–15, to continue to require repetitive inspections to detect cracking of the rear spar web or fuel leakage of the wing center section, and repair, if necessary. This proposed AD would also require modification of the rear spar web, which would constitute terminating action for the repetitive inspections. These actions would be required to be accomplished in accordance with the service bulletin described previously.

Cost Impact

There are approximately 970 airplanes of the affected design in the worldwide fleet. The FAA estimates that 659 airplanes of U.S. registry would be affected by this proposed AD: 641 ''Group 1'' airplanes and 18 ''Group 2'' airplanes, as listed in the service bulletin.

The inspection that is currently required by AD 97–25–15 takes approximately 2 work hours per

airplane to accomplish, at an average labor rate of $60 per work hour. Based on these figures, the cost impact of the currently required actions on U.S. operators is estimated to be $79,080, or $120 per airplane, per inspection cycle.

The new modification that is proposed in this AD action would take approximately 60 work hours per airplane to accomplish, at an average labor rate of $60 per work hour. Required parts would cost approximately $6,434 per airplane for ''Group 1'' airplanes, and $6,689 per airplane for ''Group 2'' airplanes. Based on these figures, the cost impact of the proposed requirements of this AD on U.S. operators is estimated to be $6,616,996, or $10,034 per ''Group 1'' airplane and $10,289 per ''Group 2'' airplane.

The cost impact figures discussed above are based on assumptions that no operator has yet accomplished any of the current or proposed requirements of this AD action, and that no operator would accomplish those actions in the future if this AD were not adopted.

Regulatory Impact

The regulations proposed herein would not have substantial direct effects on the States, on the relationship between the national government and the States, or on the distribution of power and responsibilities among the various levels of government. Therefore, in accordance with Executive Order 12612, it is determined that this proposal would not have sufficient federalism implications to warrant the preparation of a Federalism Assessment.

For the reasons discussed above, I certify that this proposed regulation (1) Is not a ''significant regulatory action'' under Executive Order 12866; (2) is not a ''significant rule'' under the DOT Regulatory Policies and Procedures (44 FR 11034, February 26, 1979); and (3) if promulgated, will not have a significant economic impact, positive or negative, on a substantial number of small entities under the criteria of the Regulatory Flexibility Act. A copy of the draft regulatory evaluation prepared for this action is contained in the Rules Docket. A copy of it may be obtained by contacting the Rules Docket at the location provided under the caption **ADDRESSES**.

List of Subjects in 14 CFR Part 39

Air transportation, Aircraft, Aviation safety, Safety.

The Proposed Amendment

Accordingly, pursuant to the authority delegated to me by the Administrator, the Federal Aviation Administration proposes to amend part 39 of the Federal Aviation Regulations (14 CFR part 39) as follows:

PART 39—AIRWORTHINESS DIRECTIVES

1. The authority citation for part 39 continues to read as follows:

Authority: 49 U.S.C. 106(g), 40113, 44701.

§ 39.13 [Amended]

2. Section 39.13 is amended by removing amendment AD 97–25–15, amendment 39–10239 (62 FR 65355, December 27, 1997), and by adding a new airworthiness directive (AD), to read as follows:

Boeing: Docket 99–NM–75–AD. Supersedes AD 97–25–15, Amendment 39–10239.

Applicability: Model 727 series airplanes having line numbers 858 through 864 inclusive, 867 through 869 inclusive, 872 through 883 inclusive, and 885 through 1832 inclusive; certificated in any category.

Note 1: This AD applies to each airplane identified in the preceding applicability provision, regardless of whether it has been modified, altered, or repaired in the area subject to the requirements of this AD. For airplanes that have been modified, altered, or repaired so that the performance of the requirements of this AD is affected, the owner/operator must request approval for an alternative method of compliance in accordance with paragraph (e)(1) of this AD. The request should include an assessment of the effect of the modification, alteration, or repair on the unsafe condition addressed by this AD; and, if the unsafe condition has not been eliminated, the request should include specific proposed actions to address it.

Compliance: Required as indicated, unless accomplished previously.

To prevent cracking of the rear spar web, which could permit fuel leakage into the airflow multiplier, and could result in an electrical short that could cause a fire, accomplish the following:

Restatement of the Requirements of AD 97–25–15

Inspections

(a) Prior to the accumulation of 15,000 total flight cycles, or within 300 flight cycles after December 27, 1997 (the effective date of AD 97–25–15, amendment 39–10239), whichever occurs later: Accomplish the inspections specified in either paragraph (a)(1) or (a)(2) of this AD, in accordance with Boeing Alert Service Bulletin 727–57A0182, dated September 18, 1997, or Boeing Service Bulletin 727–57A0182, Revision 1, dated February 25, 1999. For purposes of the AD, the access panels specified in the alert service bulletin need not be removed; the access panels need only be opened.

Note 2: The fuel tank of the wing center section may be filled with fuel to assist in detecting cracking or fuel leakage during the accomplishment of the visual inspections required by this AD.

(1) Perform a visual inspection using a borescope or mirror to detect cracking of the rear spar web and/or fuel leakage of the wing center section between right body buttock line (BBL) 40 and left BBL 40, in accordance with Part I of the Accomplishment Instructions of the service bulletin. Thereafter, repeat this inspection at intervals not to exceed 300 flight cycles. Or

(2) Perform an ultrasonic and high frequency eddy current (HFEC) inspection to detect cracking of the rear spar web of the wing center section between right BBL 40 and left BBL 40, in accordance with Part II of the Accomplishment Instructions of the service bulletin. Thereafter, repeat this inspection at intervals not to exceed 3,000 flight cycles.

Repair

(b) If any cracking of the rear spar web and/or fuel leakage of the wing center section is detected between right BBL 40 and left BBL 40 near the upper machined land radius, prior to further flight, repair in accordance with Part III of the Accomplishment Instructions in Boeing Alert Service Bulletin 727–57A0182, dated September 18, 1997, or Boeing Service Bulletin 727–57A0182, Revision 1, dated February 25, 1999. Accomplishment of this repair constitutes terminating action for the repetitive inspection requirements of this AD.

(c) If any cracking of the rear spar web and/or fuel leakage of the wing center section is detected that is outside the area specified in paragraph (b) of this AD, prior to further flight, repair in accordance with a method approved by the Manager, Seattle Aircraft Certification Office (ACO), FAA, Transport Airplane Directorate. For a repair method to be approved by the Manager, Seattle ACO, as required by this paragraph, the Manager's approval letter must specifically reference this AD.

New Requirements of this AD

Modification

(d) Prior to the accumulation of 60,000 total flight cycles, or within 3,000 flight cycles after the effective date of this AD, whichever occurs later, accomplish an ultrasonic and HFEC inspection in accordance with the requirements of paragraph (a)(2) of this AD.

(1) If no cracking is detected, prior to further flight, modify the rear spar web of the center section of the fuel tank between right BBL 40 and left BBL 40, in accordance with the Accomplishment Instructions of Boeing Alert Service Bulletin 727–57A0182, dated September 18, 1997, or Boeing Service Bulletin 727–57A0182, Revision 1, dated February 25, 1999. Accomplishment of this modification constitutes terminating action for the repetitive inspection requirements of this AD.

(2) If any cracking is detected, prior to further flight, repair and modify in accordance with the Accomplishment Instructions of Boeing Alert Service Bulletin 727–57A0182, dated September 18, 1997, or Boeing Service Bulletin 727–57A0182, Revision 1, dated February 25, 1999. Accomplishment of this modification constitutes terminating action for the

repetitive inspection requirements of this AD.

Alternative Methods of Compliance

(e)(1) An alternative method of compliance or adjustment of the compliance time that provides an acceptable level of safety may be used if approved by the Manager, Seattle ACO. Operators shall submit their requests through an appropriate FAA Principal Maintenance Inspector, who may add comments and then send it to the Manager, Seattle ACO.

(e)(2) Alternative methods of compliance, approved previously in accordance with AD 97–25–15, amendment 39–10239, are approved as alternative methods of compliance with this AD.

Note 3: Information concerning the existence of approved alternative methods of compliance with this AD, if any, may be obtained from the Seattle ACO.

Special Flight Permits

(f) Special flight permits may be issued in accordance with §§ 21.197 and 21.199 of the Federal Aviation Regulations (14 CFR 21.197 and 21.199) to operate the airplane to a location where the requirements of this AD can be accomplished, provided the limitations specified in paragraphs (f)(1) through (f)(6) of this AD are included in the special flight permit:

''(1) Required trip and reserve fuel must be carried in the No. 1 and No. 3 outer wing tanks.

(2) Wing center tank No. 2 must be empty of fuel.

(3) The fuel system must be checked for normal operation prior to flight by verifying that all boost pumps are operational; configuring the fuel system by turning on all boost pumps in the No.'s 1 and 3 outer wing tanks and by opening all crossfeed valve selectors; and by confirming that fuel is not bypassing tank No. 2 check valves by observing that there is not leakage into tank No. 2.

(4) Maintain a minimum of 5,300 pounds of fuel in tanks No. 1 and No. 3 to prevent uncovering the fuel bypass valve.

(5) The fuel quantity indication system must be operational in all three tanks.

(6) The effects of loading fuel only in the wing tanks on the airplane weight and balance must be considered and accounted for.''

Issued in Renton, Washington, on September 30, 1999.

D.L. Riggin,

Acting Manager, Transport Airplane Directorate, Aircraft Certification Service.

[FR Doc. 99–26089 Filed 10–5–99; 8:45 am]

BILLING CODE 4910–13–U

DEPARTMENT OF TRANSPORTATION

Federal Aviation Administration

14 CFR Part 39

[Docket No. 99–NM–222–AD]

RIN 2120–AA64

Airworthiness Directives; Airbus Model A310 and A300–600 Series Airplanes

AGENCY: Federal Aviation Administration, DOT.

ACTION: Notice of proposed rulemaking (NPRM).

SUMMARY: This document proposes the adoption of a new airworthiness directive (AD) that is applicable to certain Airbus Model A310 and A300–600 series airplanes. This proposal would require wiring modifications to the engine and auxiliary power unit (APU) fire detection system. This proposal is prompted by issuance of mandatory continuing airworthiness information by a foreign civil airworthiness authority. The actions specified by the proposed AD are intended to prevent the fire warning from terminating prematurely, which could result in an unnoticed, uncontained engine/APU fire.

DATES: Comments must be received by November 5, 1999.

ADDRESSES: Submit comments in triplicate to the Federal Aviation Administration (FAA), Transport Airplane Directorate, ANM–114, Attention: Rules Docket No. 99–NM–222–AD, 1601 Lind Avenue, SW., Renton, Washington 98055–4056. Comments may be inspected at this location between 9:00 a.m. and 3:00 p.m., Monday through Friday, except Federal holidays.

The service information referenced in the proposed rule may be obtained from Airbus Industrie, 1 Rond Point Maurice Bellonte, 31707 Blagnac Cedex, France. This information may be examined at the FAA, Transport Airplane Directorate, 1601 Lind Avenue, SW., Renton, Washington.

FOR FURTHER INFORMATION CONTACT: Norman B. Martenson, Manager, International Branch, ANM–116, FAA, Transport Airplane Directorate, 1601 Lind Avenue, SW., Renton, Washington 98055–4056; telephone (425) 227–2110; fax (425) 227–1149.

SUPPLEMENTARY INFORMATION:

Comments Invited

Interested persons are invited to participate in the making of the proposed rule by submitting such written data, views, or arguments as they may desire. Communications shall identify the Rules Docket number and be submitted in triplicate to the address specified above. All communications received on or before the closing date for comments, specified above, will be considered before taking action on the proposed rule. The proposals contained in this notice may be changed in light of the comments received.

Comments are specifically invited on the overall regulatory, economic, environmental, and energy aspects of the proposed rule. All comments submitted will be available, both before and after the closing date for comments, in the Rules Docket for examination by interested persons. A report summarizing each FAA-public contact concerned with the substance of this proposal will be filed in the Rules Docket.

Commenters wishing the FAA to acknowledge receipt of their comments submitted in response to this notice must submit a self-addressed, stamped postcard on which the following statement is made: ''Comments to Docket Number 99–NM–222–AD.'' The postcard will be date stamped and returned to the commenter.

Availability of NPRMs

Any person may obtain a copy of this NPRM by submitting a request to the FAA, Transport Airplane Directorate, ANM–114, Attention: Rules Docket No. 99–NM–222–AD, 1601 Lind Avenue, SW., Renton, Washington 98055–4056.

Discussion

The Direction Générale de l'Aviation Civile (DGAC), which is the airworthiness authority for France, notified the FAA that an unsafe condition may exist on certain Airbus Model A310 and A300–600 series airplanes. The DGAC advises that investigations into an uncontained engine fire revealed that the operating logic of the fire detection and associated fire warning triggering systems may lead to situations in which the auxiliary power unit (APU)/engine fire warning terminates shortly after triggering, even though the fire has not gone out. This condition, if not corrected, could result in an unnoticed, uncontained engine/APU fire.

Explanation of Relevant Service Information

Airbus has issued Service Bulletins A310–26–2024, Revision 04, dated March 5, 1999 (for Model A310 series airplanes); and A300–26–6038, dated March 5, 1999, and Revision 1, dated September 8, 1998 (for Model A300–600 series airplanes). These service bulletins

describe procedures for wiring modifications to the engine and APU fire detection system. Accomplishment of the actions specified in the service bulletins is intended to adequately address the identified unsafe condition. The DGAC classified these service bulletins as mandatory and issued French airworthiness directive 1999–238–286(B), dated June 2, 1999, in order to assure the continued airworthiness of these airplanes in France.

FAA's Conclusions

These airplane models are manufactured in France and are type certificated for operation in the United States under the provisions of section 21.29 of the Federal Aviation Regulations (14 CFR 21.29) and the applicable bilateral airworthiness agreement. Pursuant to this bilateral airworthiness agreement, the DGAC has kept the FAA informed of the situation described above. The FAA has examined the findings of the DGAC, reviewed all available information, and determined that AD action is necessary for products of this type design that are certificated for operation in the United States.

Explanation of Requirements of Proposed Rule

Since an unsafe condition has been identified that is likely to exist or develop on other airplanes of the same type design registered in the United States, the proposed AD would require accomplishment of the actions specified in the service bulletins described previously.

Cost Impact

The FAA estimates that 113 airplanes of U.S. registry would be affected by this proposed AD, that it would take approximately 5 work hours per airplane to accomplish the proposed actions, and that the average labor rate is $60 per work hour. Required parts would cost approximately $408 per airplane. Based on these figures, the cost impact of the proposed AD on U.S. operators is estimated to be $80,004, or $708 per airplane.

The cost impact figure discussed above is based on assumptions that no operator has yet accomplished any of the proposed requirements of this AD action, and that no operator would accomplish those actions in the future if this AD were not adopted.

Regulatory Impact

The regulations proposed herein would not have substantial direct effects on the States, on the relationship between the national government and the States, or on the distribution of power and responsibilities among the various levels of government. Therefore, in accordance with Executive Order 12612, it is determined that this proposal would not have sufficient federalism implications to warrant the preparation of a Federalism Assessment.

For the reasons discussed above, I certify that this proposed regulation (1) Is not a ''significant regulatory action'' under Executive Order 12866; (2) is not a ''significant rule'' under the DOT Regulatory Policies and Procedures (44 FR 11034, February 26, 1979); and (3) if promulgated, will not have a significant economic impact, positive or negative, on a substantial number of small entities under the criteria of the Regulatory Flexibility Act. A copy of the draft regulatory evaluation prepared for this action is contained in the Rules Docket. A copy of it may be obtained by contacting the Rules Docket at the location provided under the caption **ADDRESSES**.

List of Subjects in 14 CFR Part 39

Air transportation, Aircraft, Aviation safety, Safety.

The Proposed Amendment

Accordingly, pursuant to the authority delegated to me by the Administrator, the Federal Aviation Administration proposes to amend part 39 of the Federal Aviation Regulations (14 CFR part 39) as follows:

PART 39—AIRWORTHINESS DIRECTIVES

1. The authority citation for part 39 continues to read as follows:

Authority: 49 U.S.C. 106(g), 40113, 44701.

§ 39.13 [Amended]

2. Section 39.13 is amended by adding the following new airworthiness directive:

Airbus Industrie: Docket 99–NM–222–AD.

Applicability: Model A310 and A300–600 series airplanes, certificated in any category; except those on which Airbus Modifications 06267 and 07340 have been accomplished during production.

Note 1: This AD applies to each airplane identified in the preceding applicability provision, regardless of whether it has been otherwise modified, altered, or repaired in the area subject to the requirements of this AD. For airplanes that have been modified, altered, or repaired so that the performance of the requirements of this AD is affected, the owner/operator must request approval for an alternative method of compliance in accordance with paragraph (b) of this AD. The request should include an assessment of the effect of the modification, alteration, or repair on the unsafe condition addressed by this AD; and, if the unsafe condition has not been eliminated, the request should include specific proposed actions to address it.

Compliance: Required as indicated, unless accomplished previously.

To prevent the fire warning from terminating prematurely, which could result in an unnoticed, uncontained engine/auxiliary power unit (APU) fire, accomplish the following:

(a) Within 24 months after the effective date of this AD, accomplish the wiring modifications to the engine and APU fire detection system in the relay box 282VU and the electronics rack 90VU in accordance with Airbus Service Bulletin A310–26–2024, Revision 04, dated March 5, 1999 (for Model A310 series airplanes); or A300–26–6038, dated March 5, 1999, or Revision 1, dated September 8, 1999 (for Model A300–600 series airplanes); as applicable.

Alternative Methods of Compliance

(b) An alternative method of compliance or adjustment of the compliance time that provides an acceptable level of safety may be used if approved by the Manager, International Branch, ANM–116, FAA, Transport Airplane Directorate. Operators shall submit their requests through an appropriate FAA Principal Maintenance Inspector, who may add comments and then send it to the Manager, International Branch, ANM–116.

Note 2: Information concerning the existence of approved alternative methods of compliance with this AD, if any, may be obtained from the International Branch, ANM–116.

Special Flight Permits

(c) Special flight permits may be issued in accordance with sections 21.197 and 21.199 of the Federal Aviation Regulations (14 CFR 21.197 and 21.199) to operate the airplane to a location where the requirements of this AD can be accomplished.

Note 3: The subject of this AD is addressed in French airworthiness directive 1999–238–286(B), dated June 2, 1999.

Issued in Renton, Washington, on September 30, 1999.

D.L. Riggin,

Acting Manager, Transport Airplane Directorate, Aircraft Certification Service.

[FR Doc. 99–26088 Filed 10–5–99; 8:45 am]

BILLING CODE 4910–13–U

DEPARTMENT OF TRANSPORTATION

Federal Aviation Administration

14 CFR Part 39

[Docket No. 99–NM–23–AD]

RIN 2120–AA64

Airworthiness Directives; Airbus Model A300, A300–600, and A310 Series Airplanes

AGENCY: Federal Aviation Administration, DOT.

ACTION: Notice of proposed rulemaking (NPRM).

SUMMARY: This document proposes the supersedure of an existing airworthiness directive (AD), applicable to certain Airbus Model A300, A300–600, and A310 series airplanes equipped with a welded auxiliary power unit (APU) fuel feedline adapter. The existing AD currently requires repetitive dye penetrant inspections to detect cracks, rupture, or fuel leaks of the fuel feedline adapter, and replacement of the adapter if necessary. That AD also provides for optional terminating action for the repetitive inspections. This action would require accomplishment of the previously optional terminating action. This proposal is prompted by issuance of mandatory continuing airworthiness information by a foreign civil airworthiness authority. The actions specified by the proposed AD are intended to prevent fuel leakage in the APU compartment, which could result in a fire in the APU compartment.

DATES: Comments must be received by November 5, 1999.

ADDRESSES: Submit comments in triplicate to the Federal Aviation Administration (FAA), Transport Airplane Directorate, ANM–114, Attention: Rules Docket No. 99–NM–23–AD, 1601 Lind Avenue, SW., Renton, Washington 98055–4056. Comments may be inspected at this location between 9:00 a.m. and 3:00 p.m., Monday through Friday, except Federal holidays.

The service information referenced in the proposed rule may be obtained from Airbus Industrie, 1 Rond Point Maurice Bellonte, 31707 Blagnac Cedex, France. This information may be examined at the FAA, Transport Airplane Directorate, 1601 Lind Avenue, SW., Renton, Washington.

FOR FURTHER INFORMATION CONTACT: Norman B. Martenson, Manager, International Branch, ANM–116, FAA, Transport Airplane Directorate, 1601 Lind Avenue, SW., Renton, Washington 98055–4056; telephone (425) 227–2110; fax (425) 227–1149.

SUPPLEMENTARY INFORMATION:

Comments Invited

Interested persons are invited to participate in the making of the proposed rule by submitting such written data, views, or arguments as they may desire. Communications shall identify the Rules Docket number and be submitted in triplicate to the address specified above. All communications received on or before the closing date for comments, specified above, will be considered before taking action on the proposed rule. The proposals contained in this notice may be changed in light of the comments received.

Comments are specifically invited on the overall regulatory, economic, environmental, and energy aspects of the proposed rule. All comments submitted will be available, both before and after the closing date for comments, in the Rules Docket for examination by interested persons. A report summarizing each FAA-public contact concerned with the substance of this proposal will be filed in the Rules Docket.

Commenters wishing the FAA to acknowledge receipt of their comments submitted in response to this notice must submit a self-addressed, stamped postcard on which the following statement is made: ''Comments to Docket Number 99–NM–23–AD.'' The postcard will be date stamped and returned to the commenter.

Availability of NPRMs

Any person may obtain a copy of this NPRM by submitting a request to the FAA, Transport Airplane Directorate, ANM–114, Attention: Rules Docket No. 99–NM–23–AD, 1601 Lind Avenue, SW., Renton, Washington 98055–4056.

Discussion

On September 10, 1991, the FAA issued AD 91–20–07, amendment 39–8041 (56 FR 47672, September 20, 1991), applicable to certain Airbus Model A300, A300–600, and A310 series airplanes, to require repetitive dye penetrant inspections to detect cracks, rupture, or fuel leaks of the fuel feedline adapter, and replacement of the adapter, if necessary. In addition, the AD requires verification of the correct torque values of the starter motor cable terminals and the generator cable terminals. That AD also provides for optional terminating action for the repetitive inspections. These actions were prompted by a report of a fuel leak in the auxiliary power unit (APU) compartment of a model A300 series airplane, which caused a fire when the crew attempted to start the APU. The requirements of that AD are intended to prevent a fuel leak in the APU compartment; that condition, if not corrected, could result in a fire in the APU compartment.

Actions Since Issuance of Previous AD

In the preamble to AD 91–20–07, the FAA indicated that the actions required by that AD were considered ''interim action'' and that further rulemaking action was being considered. The FAA now has determined that further rulemaking action is indeed necessary, and this proposed AD follows from that determination.

Explanation of New Service Information

The manufacturer has issued Airbus Service Bulletins A300–49–0049, Revision 1; A300–49–6009, Revision 1; and A310–49–2012, Revision 1, all dated November 28, 1991. Those service bulletins provide instructions to replace the welded APU fuel feedline adapter with an improved non-welded one-piece-body adapter. Accomplishment of this replacement is intended to adequately address the identified unsafe condition.

The Direction Générale de l'Aviation Civile (DGAC), which is the airworthiness authority for France, classified these service bulletins as mandatory and issued French airworthiness directive 98–480–269(B), dated December 2, 1998, in order to assure the continued airworthiness of these airplanes in France.

FAA's Conclusions

These airplane models are manufactured in France and are type certificated for operation in the United States under the provisions of section 21.29 of the Federal Aviation Regulations (14 CFR 21.29) and the applicable bilateral airworthiness agreement. Pursuant to this bilateral airworthiness agreement, the DGAC has kept the FAA informed of the situation described above. The FAA has examined the findings of the DGAC, reviewed all available information, and determined that AD action is necessary for products of this type design that are certificated for operation in the United States.

Explanation of Requirements of Proposed Rule

Since an unsafe condition has been identified that is likely to exist or develop on other airplanes of the same type design registered in the United States, the proposed AD would supersede AD 91–20–07 to require replacement of the welded APU fuel feedline adapter with an improved non-welded one-piece-body adapter regardless of whether the welded adapter has failed. In the existing AD this action is required only if cracks, rupture, or fuel leaks are found during the inspection; otherwise, this action is optional. The FAA has recently determined, based on new information received, that the previously optional terminating modification should be made mandatory. The proposed AD would continue to require verification

of the correct torque values of the starter motor cable terminals and the generator cable terminals, and corrective action if necessary. The new replacement would be required to be accomplished in accordance with the service bulletins described previously.

Cost Impact

There are approximately 165 airplanes of U.S. registry that would be affected by this proposed AD.

The actions that are currently required by AD 91–20–07, and retained in this proposed AD, take approximately 2 work hours per airplane to accomplish, at an average labor rate of $60 per work hour. Based on these figures, the cost impact of the currently required actions on U.S. operators is estimated to be $120 per airplane.

The new actions that are proposed in this AD action would take approximately 2 work hours per airplane to accomplish, at an average labor rate of $60 per work hour. Required parts would cost approximately $274 per airplane. Based on these figures, the cost impact of the proposed requirements of this AD on U.S. operators is estimated to be $394 per airplane.

The cost impact figures discussed above are based on assumptions that no operator has yet accomplished any of the current or proposed requirements of this AD action, and that no operator would accomplish those actions in the future if this AD were not adopted.

Regulatory Impact

The regulations proposed herein would not have substantial direct effects on the States, on the relationship between the national government and the States, or on the distribution of power and responsibilities among the various levels of government. Therefore, in accordance with Executive Order 12612, it is determined that this proposal would not have sufficient federalism implications to warrant the preparation of a Federalism Assessment.

For the reasons discussed above, I certify that this proposed regulation (1) is not a ''significant regulatory action'' under Executive Order 12866; (2) is not a ''significant rule'' under the DOT Regulatory Policies and Procedures (44 FR 11034, February 26, 1979); and (3) if promulgated, will not have a significant economic impact, positive or negative, on a substantial number of small entities under the criteria of the Regulatory Flexibility Act. A copy of the draft regulatory evaluation prepared for this action is contained in the Rules Docket. A copy of it may be obtained by contacting the Rules Docket at the location provided under the caption **ADDRESSES**.

List of Subjects in 14 CFR Part 39

Air transportation, Aircraft, Aviation safety, Safety.

The Proposed Amendment

Accordingly, pursuant to the authority delegated to me by the Administrator, the Federal Aviation Administration proposes to amend part 39 of the Federal Aviation Regulations (14 CFR part 39) as follows:

PART 39—AIRWORTHINESS DIRECTIVES

1. The authority citation for part 39 continues to read as follows:

Authority: 49 U.S.C. 106(g), 40113, 44701.

§ 39.13 [Amended]

2. Section 39.13 is amended by removing amendment 39–8041 (56 FR 47672, September 20, 1991), and by adding a new airworthiness directive (AD), to read as follows:

Airbus Industrie: Docket 99–NM–23–AD. Supersedes AD 91–20–07, Amendment 39–8041.

Applicability: Model A300, A300–600, and A310 series airplanes; certificated in any category; equipped with an auxiliary power unit (APU) fuel feedline adapter, P/N A4937021700000 (welded configuration).

Note 1: This AD applies to each airplane identified in the preceding applicability provision, regardless of whether it has been modified, altered, or repaired in the area subject to the requirements of this AD. For airplanes that have been modified, altered, or repaired so that the performance of the requirements of this AD is affected, the owner/operator must request approval for an alternative method of compliance in accordance with paragraph (e) of this AD. The request should include an assessment of the effect of the modification, alteration, or repair on the unsafe condition addressed by this AD; and, if the unsafe condition has not been eliminated, the request should include specific proposed actions to address it.

Compliance: Required as indicated, unless accomplished previously.

To prevent an APU compartment fire, accomplish the following:

Restatement of Requirements of AD 91–20–07, Amendment 39–8041

Repetitive Inspections

(a) Within 100 hours time-in-service after October 7, 1991 (the effective date of AD 91–20–07, amendment 39–8041), and thereafter at intervals not to exceed 400 hours time-in-service: Perform a dye penetrant inspection to detect cracks, rupture or fuel leaks at the weld of the fuel feedline adapter, in accordance with Airbus Industrie All Operators Telex (AOT) 49–01, Issue 3, dated April 25, 1991. If cracks, rupture, or fuel leaks are found, replace the adapter with an improved, non-welded one-piece-body adapter prior to the next APU operation, or placard the APU inoperative until the adapter is replaced with the improved adapter, in accordance with Airbus Industrie Service Bulletin A300–49–0049, A300–49–6009, or A310–49–2012; all dated July 12, 1991; as applicable.

(b) Within 100 hours time-in-service after October 7, 1991, verify the correct torque values of the starter motor cable terminals and the generator cable terminals in accordance with Airbus Industrie All Operators Telex (AOT) 49–01, Issue 3, dated April 25, 1991. Correct any torque value discrepancies prior to further flight, in accordance with the AOT.

New Requirements of This AD

Installation

(c) Within 15 months after the effective date of this AD, install an improved APU fuel feedline adapter in accordance with the accomplishment instructions of Airbus Service Bulletin A300–49–0049, Revision 1 (for Model A300 series airplanes); A300–49–6009, Revision 1 (for Model A300–600 series airplanes); or A310–49–2012, Revision 1 (for Model A310 series airplanes); all dated November 28, 1991; as applicable. Such installation constitutes terminating action for the requirements of this AD.

Spares

(d) As of the effective date of this AD, no person shall install an APU fuel feedline adapter, P/N A4937021700000 (welded configuration), on any airplane.

Alternative Methods of Compliance

(e) An alternative method of compliance or adjustment of the compliance time that provides an acceptable level of safety may be used if approved by the Manager, International Branch, ANM–116, FAA, Transport Airplane Directorate. Operators shall submit their requests through an appropriate FAA Principal Maintenance Inspector, who may add comments and then send it to the Manager, International Branch, ANM–116.

Note 2: Information concerning the existence of approved alternative methods of compliance with this AD, if any, may be obtained from the International Branch, ANM–116.

(f) Special flight permits may be issued in accordance with sections 21.197 and 21.199 of the Federal Aviation Regulations (14 CFR 21.197 and 21.199) to operate the airplane to a location where the requirements of this AD can be accomplished.

Note 3: The subject of this AD is addressed in French airworthiness directive 98–480–269(B), dated December 2, 1998.

Issued in Renton, Washington, on September 30, 1999.

D.L. Riggin,

Transport Airplane Directorate, Aircraft Certification Service.

[FR Doc. 99–26084 Filed 10–5–99; 8:45 am]

BILLING CODE 4910–13–P

DEPARTMENT OF TRANSPORTATION

Coast Guard

33 CFR Part 165

[CGD01–99–130]

RIN 2115–AA97

Safety Zone: New York Harbor and Hudson River Fireworks.

AGENCY: Coast Guard, DOT.

ACTION: Notice of proposed rulemaking.

SUMMARY: The Coast Guard proposes to establish five permanent safety zones for fireworks displays located on Upper and Lower New York Bay, the Hudson River, and Raritan Bay. This action is necessary to provide for the safety of life on navigable waters during the events. This action establishes permanent exclusion areas that are only active prior to the start of the fireworks display until shortly after the fireworks display is completed, and is intended to restrict vessel traffic in a portion of Upper and Lower New York Bay, the Hudson River, and Raritan Bay.

DATES: Comments must reach the Coast Guard on or before December 6, 1999.

ADDRESSES: Comments may be mailed to the Waterways Oversight Branch (CGD01–99–130), Coast Guard Activities New York, 212 Coast Guard Drive, Staten Island, New York 10305, or deliver them to room 205 at the same address between 8 a.m. and 3 p.m., Monday through Friday, except federal holidays.

The Waterways Oversight Branch of Coast Guard Activities New York maintains the public docket for this rulemaking. Comments, and documents as indicated in this preamble, will become part of this docket and will be available for inspection or copying at room 205, Coast Guard Activities New York, between 8 a.m. and 3 p.m., Monday through Friday, except federal holidays.

FOR FURTHER INFORMATION CONTACT: Lieutenant J. Lopez, Waterways Oversight Branch, Coast Guard Activities New York (718) 354–4193.

SUPPLEMENTARY INFORMATION:

Request for Comments

The Coast Guard encourages interested persons to participate in this rulemaking by submitting written data, views, or arguments. Persons submitting comments should include their names and addresses, identify this rulemaking (CGD01–99–130) and the specific section of this document to which each comment applies, and give the reason for each comment. Please submit two copies of all comments and attachments in an unbound format, no larger than 8½ by 11 inches, suitable for copying and electronic filing. Persons wanting acknowledgment of receipt of comments should enclose stamped, self-addressed postcards or envelopes.

The Coast Guard will consider all comments received during the comment period. It may change this proposed rule in view of the comments.

The Coast Guard plans no public hearing. Persons may request a public hearing by writing to the Waterways Oversight Branch at the address under **ADDRESSES**. The request should include the reasons why a hearing would be beneficial. If it determines that the opportunity for oral presentations will aid this rulemaking, the Coast Guard will hold a public hearing at a time and place announced by a later notice in the **Federal Register**.

Background and Purpose

The Coast Guard proposes to establish five permanent safety zones that will be activated for fireworks displays occurring throughout the year that are not held on an annual basis but are normally held in one of these five locations. The five locations are east of Liberty and Ellis Islands in Upper New York Bay; east of South Beach, Staten Island in Lower New York Bay; west of Pier 60, Manhattan, on the Hudson River; and Raritan Bay in the vicinity of the Raritan River Cutoff and Ward Point Bend (West). The number of events held in these locations has increased from three in 1996 to 21 in 1998. The Coast Guard has received 11 applications for fireworks displays in these areas to date in 1999. In the past, temporary safety zones were established with limited notice for preparation by the U.S. Coast Guard and limited opportunity for public comment. Establishing permanent safety zones by notice and comment rulemaking at least gives the public the opportunity to comment on the proposed zone locations, size, and length of time the zones will be active. The Coast Guard has received no prior notice of any impact caused by the previous events.

Discussion of Proposed Rule

The five proposed safety zones are as follows:

The proposed safety zone at Liberty Island includes all waters of Upper New York Bay within a 360-yard radius of the fireworks barge located in Federal Anchorage 20–C, in approximate position 40°41′16.5″ N 074°02′23″ W (NAD 1983), about 360 yards east of Liberty Island. The proposed safety zone prevents vessels from transiting a portion of Federal Anchorage 20–C and is needed to protect boaters from the hazards associated with fireworks launched from a barge in the area. Recreational and commercial vessel traffic will be able to anchor in the unaffected northern and southern portions of Federal Anchorage 20–C. Federal Anchorages 20–A and 20–B, to the north, and Federal Anchorages 20–D and 20–E, to the south, are also available for vessel use. Marine traffic will still be able to transit through Anchorage Channel, Upper Bay, during the event as the safety zone only extends 125 yards into the 925-yard wide channel. The Captain of the Port does not anticipate any negative impact on vessel traffic due to this proposed safety zone.

The proposed safety zone at Ellis Island includes all waters of Upper New York Bay within a 360-yard radius of the fireworks barge located between Federal Anchorages 20–A and 20–B in approximate position 40°41′15″ N 074°02′09″ W (NAD 1983), about 365 yards east of Ellis Island. The proposed safety zone prevents vessels from transiting a portion of Federal Anchorages 20–A and 20–B and is needed to protect boaters from the hazards associated with fireworks launched from a barge in the area. Recreational and commercial vessel traffic will be able to anchor in the unaffected northern and southern portions of Federal Anchorages 20–A and 20–B. Federal Anchorages 20–C, 20–D, and 20–E, to the south, are also available for vessel use. Marine traffic will still be able to transit through Anchorage Channel, Upper Bay, during the event as the safety zone only extends 150 yards into the 900-yard wide channel. The Captain of the Port does not anticipate any negative impact on vessel traffic due to this proposed safety zone.

The proposed safety zone east of South Beach, Staten Island includes all waters of Lower New York Bay within a 360-yard radius of the fireworks barge located in approximate position 40°35′11″ N 074°03′42″ W (NAD 1983), about 350 yards east of South Beach,

Staten Island. The proposed safety zone prevents vessels from transiting a portion of Lower New York Bay and is needed to protect boaters from the hazards associated with fireworks launched from a barge in the area. Marine traffic will still be able to transit through Lower New York Bay during the event. The Captain of the Port does not anticipate any negative impact on vessel traffic due to this proposed safety zone.

The proposed safety zone off Pier 60, Manhattan includes all waters of the Hudson River within a 360-yard radius of the fireworks barge in approximate position 40°44′49″ N 074°01′02″ W (NAD 1983), about 500 yards west of Pier 60, Manhattan, New York. The proposed safety zone prevents vessels from transiting a portion of the Hudson River and is needed to protect boaters from the hazards associated with fireworks launched from a barge in the area. Marine traffic will still be able to transit through the eastern 150 yards of the 850-yard wide Hudson River during the event. The Captain of the Port does not anticipate any negative impact on vessel traffic due to this proposed safety zone. Additionally, vessels are not precluded from mooring at or getting underway from Piers 59–62 or from the Piers at Castle Point, New Jersey due to this proposed safety zone.

The proposed safety zone in Raritan Bay includes all waters of the Raritan River Cutoff and Ward Point Bend (West) within a 240-yard radius of the fireworks barge in approximate position 40°30′04″ N 074°15′35″ W (NAD 1983), about 240 yards east of Raritan River Cutoff Channel Buoy 2 (LLNR 36595). The proposed safety zone prevents vessels from transiting a portion of Raritan Bay in the vicinity of the Raritan River Cutoff and Ward Point Bend (West). It is needed to protect boaters from the hazards associated with fireworks launched from a barge in the area. Marine traffic will still be able to transit through the eastern 140 yards of the 230-yard wide Ward Point Bend (West) during the event. Traffic that could not transit through the closed Raritan River Cutoff would transit through Ward Point Bend (West) by using South Amboy Reach, Great Beds Reach, Ward Point Secondary Channel, and Ward Point Bend (East). Additionally, vessels would not be precluded from mooring at or getting underway from any marinas or piers at Perth Amboy, New Jersey due to this proposal.

The actual dates that these safety zones will be activated are not known by the Coast Guard at this time. Coast Guard Activities New York will give notice of the activation of each safety zone by all appropriate means to provide the widest publicity among the affected segments of the public. This will include publication in the Local Notice to Mariners. Marine information broadcasts will also be made for these events beginning 24 to 48 hours before the event is scheduled to begin. Facsimile broadcasts will also be made to notify the public. The Coast Guard expects that the notice of the activation of each permanent safety zone in this rulemaking will normally be made between thirty and fourteen days before the zone is actually activated. Fireworks barges used in the locations stated in this rulemaking will also have a sign on the port and starboard side of the barge labeled ''FIREWORKS BARGE''. This will provide on-scene notice that the safety zone the fireworks barge is located in is or will be activated on that day. This sign will consist of 10″ high by 1.5″ wide red lettering on a white background. There will also be a Coast Guard patrol vessel on scene 30 minutes before the display is scheduled to start until 15 minutes after its completion to enforce each safety zone.

The effective period for each proposed safety zone is from 8 p.m. to 1 a.m. However, vessels may enter, remain in, or transit through these safety zones during this time frame if authorized by the Captain of the Port New York, or designated Coast Guard patrol personnel on scene, as provided for in 33 CFR 165.23. Generally, blanket permission to enter, remain in, or transit through these safety zones will be given except for the 45 minute period that a Coast Guard patrol vessel is present.

This rule is being proposed to provide for the safety of life on navigable waters during the events and to give the marine community the opportunity to comment on the proposed zone locations, size, and length of time the zones will be active.

Regulatory Evaluation

This proposed rule is not a significant regulatory action under section 3(f) of Executive Order 12866 and does not require an assessment of potential costs and benefits under section 6(a)(3) of that Order. It has not been reviewed by the Office of Management and Budget under that Order. It is not significant under the regulatory policies and procedures of the Department of Transportation (DOT) (44 FR 11040; February 26, 1979). The Coast Guard expects the economic impact of this proposed rule to be so minimal that a full Regulatory Evaluation under paragraph 10e of the regulatory policies and procedures of DOT is unnecessary. This finding is based on the minimal time that vessels will be restricted from the zones, and all of the zones are in areas where the Coast Guard expects insignificant adverse impact on all mariners from the zones' activation. Vessels may safely anchor to the north and south of the zones by Liberty and Ellis Islands. Vessels may also still transit through Anchorage Channel, Lower New York Bay, the Hudson River, and Ward Point Bend (West) in Raritan Bay during these events. Vessels would not be precluded from getting underway, or mooring at, Piers 59–62 and the Piers at Castle Point, New Jersey during displays off Pier 60, nor from marinas and piers at Perth Amboy, New Jersey during displays in the Raritan River Cutoff. Advance notifications would also be made to the local maritime community by the Local Notice to Mariners, marine information broadcasts, and facsimile. Fireworks barges used in these locations will also have a sign on the port and starboard side of the barge labeled ''FIREWORKS BARGE''. This sign will consist of 10″ high by 1.5″ wide red lettering on a white background. Additionally, the Coast Guard anticipates that these safety zones would only be activated 20–25 times per year. These safety zones have been narrowly tailored to impose the least impact on maritime interests yet provide the level of safety deemed necessary

Small Entities

Under the Regulatory Flexibility Act (5 U.S.C. 601 *et seq.*), the Coast Guard must consider whether this proposed rule, if adopted, will have a significant economic impact on a substantial number of small entities. ''Small entities'' include small businesses, not-for-profit organizations that are independently owned and operated and are not dominant in their fields, and governmental jurisdictions with populations of less than 50,000.

For reasons stated in the Regulatory Evaluation section above, the Coast Guard certifies under 5 U.S.C. 605(b) that this proposed rule, if adopted, will not have a significant economic impact on a substantial number of small entities. If, however, you think that your business or organization qualifies as a small entity and that this proposed rule will have a significant economic impact on your business or organization, please submit a comment (see **ADDRESSES**) explaining why you think it qualifies and in what way and to what degree this proposed rule will economically affect it.

Collection of Information

This proposed rule does not provide for a collection of information under the Paperwork Reduction Act of 1995 (44 U.S.C. 3501 *et seq.*).

Federalism

The Coast Guard has analyzed this proposed rule under the principles and criteria contained in Executive Order 12612 and has determined that this proposed rule does not have sufficient implications for federalism to warrant the preparation of a Federalism Assessment.

Unfunded Mandates

Title II of the Unfunded Mandates Reform Act of 1995 (UMRA) (Pub. L. 104–4, 109 Stat. 48) requires Federal agencies to assess the effects of certain regulatory actions on State, local, and tribal governments, and the private sector. UMRA requires a written statement of economic and regulatory alternatives for rules that contain Federal mandates. A ''Federal mandate'' is a new or additional enforceable duty imposed on any State, local, or tribal government, or the private sector. If any Federal mandate causes those entities to spend, in the aggregate, $100 million or more in any one year, the UMRA analysis is required. This proposed rule would not impose Federal mandates on any State, local, or tribal governments, or the private sector.

Environment

The Coast Guard has considered the environmental impact of this proposed rule and concluded that under figure 2–1, paragraph 34(g), of Commandant Instruction M16475.1C, this rule is categorically excluded from further environmental documentation. A written Categorical Exclusion Determination is available in the docket for inspection or copying where indicated under **ADDRESSES.**

List of Subjects in 33 CFR Part 165

Harbors, Marine safety, Navigation (water), Reporting and recordkeeping requirements, Security measures, Waterways.

Proposed Regulation

For the reasons set out in the preamble, the Coast Guard proposes to amend 33 CFR Part 165 as follows:

PART 165—[AMENDED]

1. The authority citation for Part 165 continues to read as follows:

Authority: 33 U.S.C. 1231; 50 U.S.C. 191; 33 CFR 1.05–1(g), 6.04–1, 6.04–6, 160.5; 49 CFR 1.46.

2. Add § 165.168 to read as follows:

§ 165.168 Safety Zones: New York Harbor and Hudson River Fireworks.

(a) *Liberty Island Safety Zone:* All waters of Upper New York Bay within a 360-yard radius of the fireworks barge in approximate position 40°41′16.5″ N 074°02′23″ W (NAD 1983) located in Federal Anchorage 20–C, about 360 yards east of Liberty Island.

(b) *Ellis Island Safety Zone:* All waters of Upper New York Bay within a 360-yard radius of the fireworks barge located between Federal Anchorages 20–A and 20–B, in approximate position 40°41′15″ N 074°02′09″ W (NAD 1983), about 365 yards east of Ellis Island.

(c) *South Beach, Staten Island Safety Zone:* All waters of Lower New York Bay within a 360-yard radius of the fireworks barge in approximate position 40°35′11″ N 074°03′42″ W (NAD 1983), about 350 yards east of South Beach, Staten Island.

(d) *Pier 60, Hudson River Safety Zone:* All waters of the Hudson River within a 360-yard radius of the fireworks barge in approximate position 40°44′49″ N 074°01′02″ W (NAD 1983), about 500 yards west of Pier 60, Manhattan, New York.

(e) *Raritan Bay Safety Zone:* All waters of Raritan Bay in the vicinity of the Raritan River Cutoff and Ward Point Bend (West) within a 240-yard radius of the fireworks barge in approximate position 40°30′04″ N 074°15′35″ W (NAD 1983), about 240 yards east of Raritan River Cutoff Channel Buoy 2 (LLNR 36595).

(f) *Notification.* Coast Guard Activities New York will cause notice of the activation of these safety zones to be made by all appropriate means to effect the widest publicity among the affected segments of the public, including publication in the local notice to mariners, marine information broadcasts, and facsimile. Fireworks barges used in these locations will also have a sign on their port and starboard side labeled ''FIREWORKS BARGE''. This sign will consist of 10″ high by 1.5″ wide red lettering on a white background.

(g) *Effective Period.* This section is effective from 8 p.m. to 1 a.m. each day a barge with a ''FIREWORKS BARGE'' sign on the port and starboard side is on-scene in a location in paragraphs (a) through (e) of this section. Vessels may enter, remain in, or transit through these safety zones during this time frame if authorized by the Captain of the Port New York or designated Coast Guard patrol personnel on scene.

(h) *Regulations.* (1) The general regulations contained in 33 CFR 165.23 apply.

(2) All persons and vessels shall comply with the instructions of the Coast Guard Captain of the Port or the designated on-scene-patrol personnel. These personnel comprise commissioned, warrant, and petty officers of the Coast Guard. Upon being hailed by a U. S. Coast Guard vessel by siren, radio, flashing light, or other means, the operator of a vessel shall proceed as directed.

Dated: September 28, 1999.

R.E. Bennis,

Captain, U.S. Coast Guard, Captain of the Port, New York.

[FR Doc. 99–26036 Filed 10–5–99; 8:45 am]

BILLING CODE 4910–15–U

DEPARTMENT OF EDUCATION

34 CFR Part 75

Office of Elementary and Secondary Education—Safe and Drug-Free Schools and Communities Act Native Hawaiian Program; Direct Grant Program

AGENCY: Department of Education.

ACTION: Notice of Proposed Waiver.

SUMMARY: The Secretary proposes to waive the requirements in EDGAR at 34 CFR 75.261 in order to extend the project period under the Safe and Drug-Free Schools and Communities Act (SDFSCA) Native Hawaiian Program, under title IV of the Elementary and Secondary Education Act of 1965, as amended (ESEA), from 48 months to up to 72 months. This action will allow services under this program to continue uninterrupted and will result in the awarding of up to a 24-month continuation award to the existing grantee, using fiscal year (FY) 1999 and FY 2000 funds.

DATES: Comments must be received by December 6, 1999.

ADDRESSES: Comments should be sent to the Safe and Drug-Free Schools and Communities Native Hawaiian Program, U.S. Department of Education, 400 Maryland Avenue, SW, Washington, DC 20202–6123. FAX: (202) 260–7767.

FOR FURTHER INFORMATION CONTACT: Contact Elayne McCarthy, U.S. Department of Education, 400 Maryland Avenue, SW, Room 3E322, Washington, DC 20202–6123. Telephone: (202) 260–2831; FAX: (202) 260–7767.

Individuals who use a telecommunications device for the deaf (TDD) may call the Federal Information

Relay Service (FIRS) at 1–800–877–8339.

Individuals with disabilities may obtain this document in an alternate format (e.g., Braille, large print, audiotape, or computer diskette) on request to the contact person listed under **FOR FURTHER INFORMATION CONTACT**.

SUPPLEMENTARY INFORMATION: In 1994, title I of the Improving America's Schools Act (IASA), Public Law 103–382, reauthorized the ESEA for a period of 5 years (1995–1999). The Safe and Drug-Free Schools and Communities Native Hawaiian Program is authorized by sections 4111(a)(4) and 4118 of the SDFSCA, which is title IV of ESEA. Section 4118(a) of the SDFSCA authorizes the Secretary to make grants to or enter into cooperative agreements or contracts with ''organizations primarily serving and representing Native Hawaiians which are recognized by the Governor of the State of Hawaii to plan, conduct, and administer programs, or portions thereof, which are authorized by and consistent with the provisions of SDFSCA for the benefit of Native Hawaiians.'' Section 4118(b) of the SDFSCA defines the term ''Native Hawaiian'' as any individual whose ancestors were natives, prior to 1778, of the area which now comprises the State of Hawaii.

In 1995 the Department held a competition under section 4118 of the SDFSCA among the eligible entities for the SDFSCA Native Hawaiian Program. As a result of that competition, the Secretary awarded a grant to one entity with FY 1995 funds for a project period of 48 months, based on the grant application. Since that time, the grantee for the SDFSCA Native Hawaiian Program under the SDFSCA has received continuation awards with funds from three subsequent fiscal years (FY 1996, FY 1997, and FY 1998). The grantee has received approximately $1 million per year.

As of the date of publication of this notice, the ESEA has not been reauthorized, and the current authorization has been extended into FY 2000. This waiver would allow the period of funding for the SDFSCA Native Hawaiian Program to be directly tied to the time period for reauthorization of the current ESEA, including SDFSCA. This proposed waiver for the SDFSCA Native Hawaiian Program would be in force only as long as the current SDFSCA is in effect and will terminate upon reauthorization of ESEA. The Department is therefore soliciting public comment on the proposed waiver.

If the Department were to hold a new competition under the existing legislation in FY 2000 (using FY 1999 funds), the Department would only fund the project for a limited project period up to 24 months, in anticipation that the program statute would be reauthorized prior to FY 2001. It would take a new grantee time much of this to 'start up', given the scope and complexity of the services provided and the time it takes to hire qualified staff and develop plans and relationships that are responsive to the Native Hawaiian population in the Hawaiian islands. Holding such a competition would impose additional costs at the Federal level without a guarantee that the new grantee would be able to provide the technical assistance and services necessary to schools and communities serving the Native Hawaiian population, as the Department moves towards reauthorization of ESEA.

Therefore, the Assistant Secretary proposes, in the best interest of the Federal Government, to extend the current project for up to two additional years. This action is consistent with the President's mandate to implement cost-effective, cost-saving initiatives. In order to make these cost extensions the Assistant Secretary must waive the regulation at 34 CFR 75.261, which permits extensions of projects only at no cost to the Federal Government. In consideration of the foregoing, the Assistant Secretary proposes to waive 34 CFR 75.261 as applied to the SDFSCA Native Hawaiian Program during FY 1999 and FY 2000.

Regulatory Flexibility Act Certification

The Assistant Secretary certifies that this waiver would not have a significant economic impact on a substantial number of small entities. The limited number of entities affected by this waiver are the current grantee, as well as potential applicants named by the Governor, under a new competition with a limited project period of up to 24 months.

Intergovernmental Review

This program is subject to the requirements of Executive Order 12372 and the regulations in 34 CFR 79. The objective of the Executive order is to foster an intergovernmental partnership and a strengthened federalism by relying on processes developed by State and local governments for coordination and review of proposed Federal financial assistance. In accordance with this order, this document is intended to provide early notification of the Department's specific plans and actions for this program.

Invitation to Comment

Interested parties are invited to submit comments and recommendations regarding this waiver of 34 CFR 75.261 under the SDFSCA Native Hawaiian Program. All comments submitted in response to this proposed up to two year waiver will be available for public inspection, during and after the comment period, in Room 3E322, 400 Maryland Avenue, SW, Washington, DC, between the hours of 8:30 AM and 4:00 PM, Monday through Friday except on Federal holidays.

Assessment of Educational Impact

The Secretary particularly requests comments on whether this waiver would require transmission of information that is being gathered by or is available from any other agency or authority of the United States.

Electronic Access To This Document

You may view this document, as well as all other Department of Education documents published in the **Federal Register**, in text or Adobe Portable Document Format (PDF) on the Internet at either of the following sites:

http://ocfo.ed.gov/fedreg.htm http:/www.ed.gov/news.html

To use PDF you must have the Adobe Acrobat Reader Program with Search, which is available free at either of the previous sites. If you have questions about using the PDF, call the U.S. Government Printing Office (GPO), toll free, at 1–888–293–6498; or in the Washington, DC, area at (202) 512–1530.

Note: The official version of this document is the document published in the **Federal Register**. Free Internet access to the official edition of the **Federal Register** and the Code of Federal Regulations is available on GPO Access at:

http://www.access.gpo.gov/nara/index.html

Catalog of Federal Domestic Assistance Number 84.186C

Program Authority: 20 U.S.C. 7111(a)(4); 20 U.S.C. 7118.

Dated: October 1, 1999.

Judith A. Johnson,

Acting Assistant Secretary for Elementary and Secondary Education.

[FR Doc. 99–26094 Filed 10–5–99; 8:45 am]

BILLING CODE 4000–01–P

POSTAL SERVICE

39 CFR Part 111

Barcode Requirements for Special Services Labels

AGENCY: Postal Service.

ACTION: Proposed Rule.

SUMMARY: The Postal Service has redesigned the following special services forms and labels: PS Form 3800, Receipt for Certified Mail; PS Form 3813–P, Receipt for Insured Mail—Domestic—International; PS Form 8099, Receipt for Recorded Delivery; Label 200, Registered Mail; and PS Form 3804, Return Receipt for Merchandise. In addition to the current OCR font on the labels, the Postal Service is placing formatted barcodes on the labels. The USS–128 Subset A format barcode will be used on all USPS-printed retail labels for insured mail, recorded delivery mail, and registered mail. The USS Code 128 Subset C format will be used on all USPS-printed retail labels for certified mail and return receipt for merchandise. Customer-generated labels for these services must be either USS Code 128 or USS I 2 of 5 barcode format. Vendors or mailers preparing customer-generated labels will be required to comply with these requirements for special services labels within six months after the publication of the **Federal Register** final rule.

This proposed rule sets forth proposed Domestic Mail Manual (DMM) language.

DATES: Comments must be received on or before November 5, 1999.

ADDRESSES: Written comments should be mailed or delivered to Mary Shriver, Special Services, U.S. Postal Service, 475 L'Enfant Plaza SW, Room 5541, Washington DC 20260–2620. Copies of all written comments will be available for inspection and photocopying at USPS Headquarters Library, 475 L'Enfant Plaza SW, 11th Floor N, Washington DC 20260–1540 between 9 a.m. and 4 p.m., Monday through Friday. Photocopies cost $0.15 per page.

FOR FURTHER INFORMATION CONTACT: Mary Shriver, (202) 268–6554.

SUPPLEMENTARY INFORMATION: In order to provide delivery confirmation and signature confirmation services, the Postal Service has invested in an information technology infrastructure that includes the capability to scan barcodes upon delivery. To maximize the cost-effectiveness of this infrastructure and to achieve long-standing goals for improved customer information management, the Postal Service has implemented a similar barcode system for specific special services. The affected special services include certified mail, insured mail, recorded delivery mail, registered mail, and return receipt for merchandise. The infrastructure will also be used as part of the Postal Service plan to optically scan and electronically store mail recipient signatures. The new label deployment is scheduled to begin in fall 1999.

All carriers and retail clerks will use scanners to scan the barcodes on these labels upon delivery. With the exception of registered mail labels, special services labels will be available in postal lobbies for customers to apply to their mail.

When a customer receives and signs for a mailpiece, the mail carrier will scan the barcoded special service label to indicate that the piece has been delivered. If the customer is not home to sign for delivery, the carrier will leave a PS Form 3849, Delivery Notification/Reminder/Receipt, to inform the customer that a mailpiece is waiting for pickup at the local post office. When the special services barcoded mailpiece is returned to the post office, it will be scanned as an attempted delivery.

Mailers may use either of these special services label options:

a. USPS-printed forms obtained from a post office at no charge.

b. Privately printed forms that are nearly identical in design to USPS-printed special services forms (as authorized by USPS). Privately printed barcoded labels must meet the requirements in the proposed Domestic Mail Manual (DMM) S940. These requirements include:

(1) The barcoded label section of any special services form must be placed either above the delivery address and to the right of the return address, or to the left of the delivery address on parcels. The label must always be placed on the address side of a mailpiece.

(2) Privately printed forms or labels must use a permanent adhesive or have another form of glue to securely affix the label to the mailpiece. The label must be easy to affix but able to withstand normal handling by USPS.

(3) For all labels mailed domestically, mailers must use either the USS–128 or USS I 2 of 5 barcode symbology. For those labels mailed internationally (recorded delivery, international registered mail, or international insured mail) mailers must use USPS-printed forms. The x-dimension must be between 15.0 and 18.0 mils with clear zones of at least 10x. The height of the barcode must be a minimum of .75″, and a maximum of .80″. In the case of PS Form 3800, Receipt for Certified Mail, the taggant must be a square with sides measuring between 0.5″ and 0.7″. Human-readable characters printed to represent the barcode ID must appear either directly above or below the barcode. The human-readable characters must be parsed in groups of four.

(4) Each barcode must contain a unique package identification code (PIC) and be made up of four fields totaling 20 characters. The four required fields are:

(a) Service Type Code (STC): a two-character number that identifies the type of product or service used for each item.

(b) Customer ID: a nine-digit DUNS (registered trademark) number that uniquely identifies the originating customer. Customers may request their nine-digit customer ID DUNS (registered trademark) number from their postal representative or by contacting Dun & Bradstreet by telephone at 800–333–0505 or via the Internet at www.dnb.com. A DUNS (registered trademark) number is required for all privately printed labels.

(c) Packaging Sequence Number (PSN): an eight-character-fixed sequential number.

(d) Check Digit: one-character number.

Mailers who choose to use privately printed labels will need to receive certification for their labels from the National Customer Support Center (NCSC). To receive certification, a mailer must supply for evaluation and approval a sample that includes 20 barcoded labels generated by each printer. The sample is sent to: Barcode Certification, National Customer Support Center, US Postal Service, 6060 Primacy Pkwy Ste 201, Memphis TN 38188–0001.

In the event that barcode print quality falls out of tolerance on privately printed labels after approval has been granted, the mailer printing those labels will be contacted by USPS, and an effort will be made to jointly resolve the problem. Should circumstances warrant, the printing and use of mailer-printed labels may be discontinued until a mailer's printer(s) is re-certified. Section S940, Privately Printed Form Specifications, has been added to the Domestic Mail Manual (DMM) to provide greater detail for label specifications, barcode symbology, label certification, and service type codes.

Although exempt from the notice and comment requirements of the Administrative Procedure Act (5 U.S.C. 553(b), (c)) regarding proposed rulemaking by 39 U.S.C. 410(a), the Postal Service invites comments on the following proposed revisions to the Domestic Mail Manual (DMM), incorporated by reference in the Code of Federal Regulations (See 39 CFR part 111).

List of Subjects in 39 CFR Part 111

Postal Service.

PART 111—[AMENDED]

The authority citation for 39 CFR Part 111 continues to read as follows:

Authority: 5 U.S.C. 552(a); 39 U.S.C. 101, 401, 403, 404, 3001–3011, 3201–3219, 3403–3406, 3621, 3626, 5001.

Amend the following sections of the Domestic Mail Manual (DMM) as set forth below:

S SPECIAL SERVICES

* * * * *

S900 Special Postal Services

S910 Security and Accountability

S911 Registered Mail

* * * * *

3.0 MAILING

* * * * *

3.4 Label 200

(Amend 3.4 to include new barcode requirements to read as follows:)

Registered mail must bear a barcoded red Label 200 (see Exhibit 3.4). The barcode must be represented in human-readable numbers printed below the barcode and parsed in groups of four digits. The label must be placed above the delivery address and to the right of the return address, or to the left of the delivery address on parcels. Any large-volume mailer can obtain Label 200 in rolls of 100.

Exhibit 3.4 Label 200

(New label available in fall 1999.)

* * * * *

(Redesignate current 3.5 through 3.9 as 3.6 through 3.10. Insert new 3.5 to read as follows:)

3.5 Privately Printed Label 200

If authorized, a mailer may use a privately printed Label 200, Registered Mail, for domestic mail only. Privately printed labels must be nearly identical in design and color to the USPS form, with a barcode and human-readable numbers that meet the USPS specifications in S940. A minimum of three preproduction samples must be submitted to the business mail entry manager serving the mailer's location for review by the mailpiece design analyst. Once approved, the mailer must print sample labels with barcodes to be certified under S940.

* * * * *

S912 Certified Mail

* * * * *

2.0 MAILING

* * * * *

2.3 Form 3800

(Amend 2.3 to include barcode requirements to read as follows:)

Certified Mail must bear a barcoded green Form 3800, Receipt for Certified Mail (see Exhibit 2.3). The barcode must be represented as human-readable numbers printed below the barcode and parsed in groups of four digits. The label part of the form must be placed above the delivery address and to the right of the return address, or to the left of the delivery address on parcels.

Exhibit 2.3 Certified Mail Label

(New label available in fall 1999.)

* * * * *

2.4 Privately Printed Form 3800

(Amend 2.4 by adding requirements for privately printed Form 3800 to read as follows:)

If authorized, a mailer may use a privately printed Form 3800, Receipt for Certified Mail. The privately printed form must be nearly identical in design, color, and fluorescent properties to the USPS form with a barcode and human readable numbers that meet the USPS specifications in S940. A minimum of three preproduction samples must be submitted to the business mail entry manager serving the mailer's location for review by the mailpiece design analyst. Once approved, the mailer must print sample labels with barcodes to be certified under S940.

* * * * *

S913 Insured Mail

* * * * *

2.0 MAILING

* * * * *

2.3 Endorsement and Postmarking

(Amend 2.3 by adding a reference to the barcode requirements to read as follows:)

Insured mail must be stamped on the address side with the elliptical insured stamp if insured for $50 or less or have a barcoded blue Form 3813–P, Receipt for Insured Mail, if insured for more than $50 (see Exhibit 2.3). The barcode must be represented in human-readable numbers printed below the barcode and parsed in groups of four digits. The required endorsement or Form 3813–P, Receipt for Insured Mail, must be placed above the delivery address and to the right of the return address, or to the left of the delivery address on parcels.

Exhibit 2.3 Insurance Endorsements, Form 3813–P

(New label available in fall 1999.)

* * * * *

2.4 Privately Printed Form 3813–P

(Amend 2.4 by adding requirements for privately printed Form 3813-P to read as follows:)

If authorized, a mailer may use a privately printed Form 3813–P, Receipt for Insured Mail, for domestic mail only. The privately printed form must be nearly identical in design and color to the USPS form with a barcode and human readable numbers that meets the USPS specifications in S940. A minimum of three preproduction samples must be submitted to the business mail entry manager serving the mailer's location for review by the mailpiece design analyst. Once approved, the mailer must print sample labels with barcodes to be certified under S940.

* * * * *

S917 Return Receipt for Merchandise

1.0 BASIC INFORMATION

* * * * *

1.4 Endorsement

(Amend 1.4 by adding barcode requirements to read as follows:)

Return receipt for merchandise mail must bear a barcoded brown Form 3804 (see Exhibit 1.4). The barcode must be represented as human-readable numbers printed below the barcode and parsed in groups of four digits. The label part of the form and the endorsement ''Return Receipt Requested'' must be placed above the delivery address and to the right of the return address, or to the left of the delivery address on parcels.

Exhibit 1.4 Return Receipt for Merchandise, Form 3804

(New label available in fall 1999.)

* * * * *

1.5 Privately Printed Form 3804

(Amend 1.5 by adding requirements for privately printed Form 3804 to read as follows:)

If authorized, a mailer may use a privately printed Form 3804, Return Receipt for Merchandise. The privately printed form must be nearly identical in design and color to the USPS form with a barcode and human readable numbers that meets the USPS specifications in S940. A minimum of three preproduction samples must be submitted to the business mail entry manager serving the mailer's location for review by the mailpiece design analyst. Once approved, the mailer must

print sample labels with barcodes to be certified under S940.

* * * * *

S921 Collect on Delivery (COD) Mail

* * * * *

2.0 COD FORMS

2.1 Availability and Conditions

(Amend 2.1 by adding reference to the barcode requirements to read as follows:)

Mailers must complete barcoded Form 3816 (see Exhibit 2.1) and attach it either above the delivery address and to the right of the return address, or to the left of the delivery address on parcels. The barcode on each form must be represented as human-readable numbers printed below the barcode and parsed in groups of four digits. If more than three articles are sent at a time, the mailer may use Form 3816–AS, COD Mailing and Delivery Receipt.

(Add new Exhibit 2.1:)

Exhibit 2.1 Form 3816, COD Mailing and Delivery Receipt

(New label available in fall 1999.)

* * * * *

3.0 MAILING

* * * * *

(Amend title of 3.2 to read as follows:)

3.2 Numbering for Large Volumes

(Revise 3.2 to read as follows:)

A mailer who regularly mails a large volume of COD mail must ensure that a unique COD number is used for each article mailed.

* * * * *

(Insert S940 to read as follows:)

S940 Privately Printed Label Specifications

1.0 LABEL SPECIFICATIONS

1.1 Label Size

Privately printed labels must meet the following sizes:

a. *Certified Mail:* 3 to 3½ inches long by 1¾ to 2 11/32 inches high. For PS Form 3800, Receipt for Certified Mail, this size includes the detachable label placed over the top of the envelope to identify certified mail when placed in trays.

b. *Insured Mail:* 3 to 3½ inches long by 1¾ inches to 2 11/32 inches high.

c. *Registered Mail:* 3 to 3½ inches long by 1¾ to 2 11/32 inches high.

d. *Return Receipt:* 3½ to 3⅔ inches high by 7 to 7⅛ inches long overall; 3½ to 3⅔ inches by 5½ inches detached. Any form less than 3½ inches high or 5 inches in length is non-mailable.

e. *Return Receipt for Merchandise:* 3 to 3½ inches long by 1¾ to 2 11/32 inches high.

1.2 Label Stock

Privately printed labels must use the following stock:

a. *Certified Mail:* White OCR bond, 20-pound basis weight (17 by 22 inches, 500 sheets), equal to JCP Code O–25, except no more than a trace of fluorescence in the paper.

b. *Insured Mail, Return Receipt for Merchandise:* White OCR bond, 20-pound basis weight (17 by 22 inches, 500 sheets), equal to JCP Code O–25.

c. *Registered Mail:* White OCR bond or Smudgeproof Litho Label, 50-pound basis (17 by 22 inches, 500 sheets), with general-purpose permanent, pressure-sensitive adhesive coating on the back.

d. *Return Receipt:* The form must be printed on 89-pound green U.S. postal card, 110-pound green index, or 125-pound green tag. Minimum thickness of 0.007 inch is required for all stock. Color of stock must be a close match by visual inspection of Pantone Matching System (PMS) 9561 Green. In addition, green background reflectance values, as measured by the USPS envelope reflectance meter (ERM–2), must be a minimum of 60 percent in the red and 64 percent in the green portions of the optical spectrum.

Note: At the mailer's or printer's option, white stock may be used with a surface tint of PMS 9561 Green. If this option is used, the address block area may remain white. The color green, however, must remain uniform on the rest of the form, and the background reflectance values, as measured by the USPS envelope reflectance meter (ERM–2), must be a minimum of 60 percent in the red and 64 percent in the green portions of the optical spectrum.

1.3 Label Printing

The label must be printed in reverse in a match of the Pantone Matching System (PMS) color identified below. Ink must be unreadable (''blind'') to the wands used with postal automated recordkeeping systems for accountable mail and have a print contrast signal of less than 10 percent as measured by a USPS envelope reflectance meter (ERM–2). Numbers must be printed in non-reflective black ink. Black ink must have a minimum print contrast signal of not less than 50 percent.

a. *Certified Mail:* PMS 347 Green.

b. *Insured Mail:* PMS 286 Blue or NCS Medium Blue #12 for shade.

c. *Registered Mail:* PMS 185 Red.

d. *Return Receipt for Merchandise:* Reflective Sinclair and Valentine J–30497 Brown (or equal).

e. *Return Receipt:* Black ink, two sides, head to head. FIM bars on face must be within 1/16 inch from the top edge and 2⅛ inch from the right-side perforation. If the address is preprinted on the face of the return receipt, it must bear a complete delivery address as defined in A010.1.2, including the ZIP+4 Code and a correct delivery point barcode. If the address and barcode are preprinted, Facing Identification Mark (FIM) C under C100 5.0 must be used. If the address and barcode are not preprinted, FIM B must be used.

1.4 Construction

Privately printed labels must conform to the following construction:

a. *Return Receipt:* Perforate along the entire 3½ to 3⅔ inch dimension ¾ inch from the left and right edges. Coat the areas between the perforations and the outside edges with a ⅝ inch wide solid strip of permanent pressure-sensitive adhesive suitable for adhering to paper, wood, metal, printed and unprinted spun-bonded olefin, and corrugated fiberboard products.

b. Certified Mail, Insured Mail, Registered Mail, Return Receipt for Merchandise: Labels printed onto the mailpiece do not need pressure-sensitive adhesive. Labels designed to be affixed to the mailpiece must be coated on the back (within 1/16 inch of the outside edges of the piece) with a permanent-type, pressure-sensitive adhesive. The adhesive must adhere immediately and firmly to various paper-type surfaces, *e.g.*, kraft, sulfite, bond, spun-bonded olefin, and other man-made materials normally used for packaging of mailed parcels. Adhesive must be such that any attempt to remove the label must destroy either the label or part of the paper surface to which it is adhered.

1.5 TAGGANT

A fluorescent taggant is required on all privately printed copies of PS Form 3800, Receipt for Certified Mail, as follows:

a. Taggant Area: The taggant area must consist of a single area (minimum dimension 0.5 inch by 0.5 inch; maximum dimension 0.7 inch by 0.7 inch) located in the upper right section of the label area approximately 11/16 inch from the bottom of the label. Printers must not alter the fluorescing spectral response when applying the taggant by allowing the fluorescing material to be mixed with the colored ink used on part of the label. The taggant material must be Angstrom #6 Sub-Micron Scanning Compound 17 percent concentration at a coat weight of 2 mils (0.002 inch). Alternative compounds and concentrations must be approved by the Postal Service. Samples

may be sent for testing and approval to: Manager, Test and Evaluation, U.S. Postal Service, 8403 Lee Hwy 2nd Fl, Merrifield VA 22082–8133.

b. Taggant Location: The taggant must not ''chalk'' (*i.e.*, interfere with the scanning of the barcode) and must maintain consistency. The taggant location must be consistent without splattering of taggant on other areas of the label. Any overcoat varnish on the taggant area must be consistent and must not interfere with the spectral response of the taggant. The bottom of the taggant should be located no lower than 3¼ inch from the bottom of the mailpiece.

c. Taggant verification: The printer should use a luminescent spectrometer calibrated to the rhodamine red standard to verify the taggant. The taggant must be tested at a nominal excitation frequency of 365 nanometers (nm). The spectrometer should be set to measure emissions using an emission ''slit width'' of 2.5 nm and an excitation ''slit width'' of 10 nm. Emission should peak at 550 nm +/-5 nm per USPS TM–1262. Measuring of the 550 nm peak should be made by scanning in the 450 to 750 nm range. A cutout filter will be required, and this should be in the 430 nm range, before the emission peak and far enough from the excitation peak to eliminate any harmonic of the excitation peak. The taggant must be equal to Angstrom #6 Sub-micron Scanning Compound 17 percent concentration and meet the spectral response intensity standards of the USPS. Intensity of fluorescence must be sufficient for detection by USPS sortation equipment.

2.0 BARCODE ELEMENTS

2.1 Basic Information

USPS-generated forms use USS Code 128 barcodes. Mailer-generated and privately printed domestic forms must use either USS Code 128 or the USS I 2 of 5 barcode symbology, with 20-digit package ID barcodes. Barcode elements include the following:

a. Start Code: All barcodes must have a symbol start code. The USS 128 barcode symbologies must begin with a Start Code C. The start character is not shown in the human-readable presentation and it is not manually keyed or transmitted.

b. Service Type Code (STC): The two-digit Service Type Code is the second part of the barcode symbology. These Service Type Codes can be found in S940.7.

c. Customer ID: Customers may request their nine-digit customer ID (DUNS (registered trademark) number) from their postal representative or by contacting Dun & Bradstreet by telephone at 800–333–0505 or via the Internet at www.dnb.com. This number uniquely identifies business entities at specific physical addresses. Customers generating mailings at multiple locations must use the DUNS (registered trademark) number appropriate for each mailing location.

d. Packaging Sequential Number (PSN): Customers self-assign an eight-digit Packaging Sequential Number. An ID must remain unique for at least two years (24 months). This will be a fixed-length number using either the USS–128 or the I 2 of 5 symbology.

e. Check Digit(s): Check digit(s) are required for all customer-generated special services forms to detect errors resulting from manual data entry or errors from transmitted data. The algorithm for calculating the check digit appears in S940.8.0.

(1) The mailer-generated 20-digit USS Code 128 barcode forms for certified, insured, registered, and return receipt for merchandise will use a weighted MOD 10 and MOD 103 check digits. The weighted MOD 10 check digit that follows the final digit of the unique sequential package ID is considered a data element and must appear in human readable form, and is transmitted as data. The MOD 103 is overhead to the 128 symbology and precedes the final stop character, it must not appear as human readable or it will be transmitted as data.

(2) The mailer-generated 20-digit USS Interleaved 2 of 5 barcode labels for certified, insured, registered, and return receipt for merchandise will use only a weighted MOD 10 check digit. The Code I 2 of 5 weighted MOD 10 checksum appears in the 20th data position. It must be included in vendor barcode software and selected to meet USPS requirements, provided it meets the weighted MOD 10 algorithm.

f. Stop Code: All barcodes must have a symbol Stop Code. The stop character is not shown in the human-readable presentation and it is not manually keyed or transmitted.

2.2 Barcode Symbology

The barcode for privately printed forms may be printed using one of two symbologies:

a. USS Code 128 (Subset C for 20-digit barcode labels).

b. USS I 2 of 5 (20-digit barcode labels).

Data Format for a 20-Digit USS Code 128 Label

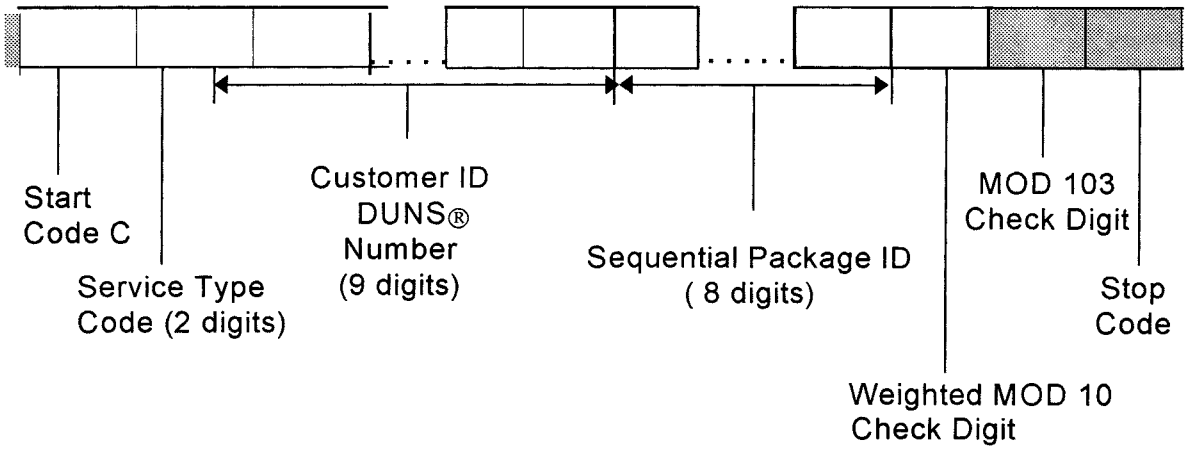

Data Format for a 20-digit USS Code I 2 of 5

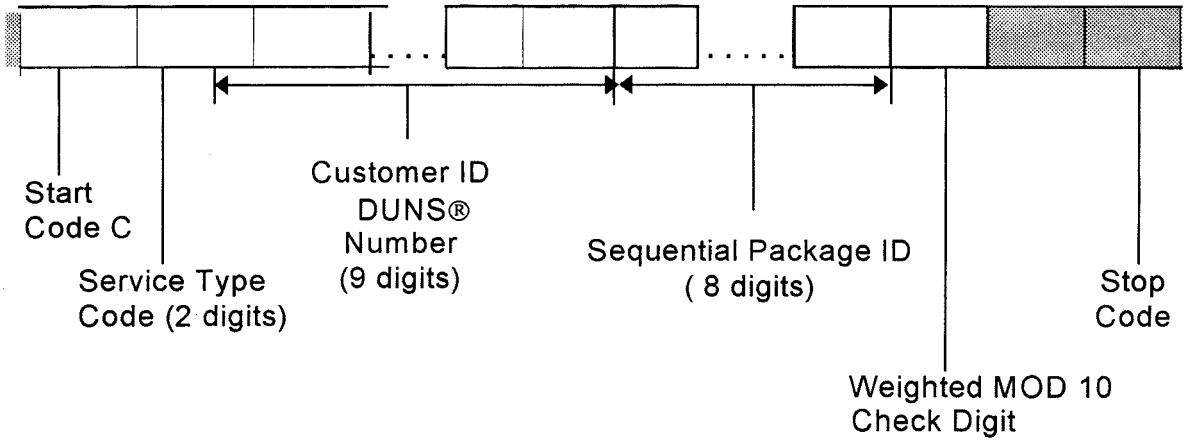

2.3 Barcode Print Specifications

Barcode print specifications must meet the following:

a. Dimensions: The x-dimension must be between 15.0 and 18.0 mils. The clear zones must be at least 10x. The height of the barcode must be a minimum of .75″, and a maximum of .80″. The ratio of wide to narrow element widths for the I 2 of 5 symbology referred to as ''N'' must be 2.5 to 3.0 inclusive.

b. Clear Zone: No printing may appear in an area ⅛ inch above or below the barcode. A minimum clear or quiet zone equal to 10 times (10x) the average

measured narrow element (bar or space) width must be maintained on either side of the barcode per Automatic Identification Manufacturers specifications. When feasible, a left and right clear zone of ¼ inch is recommended.

c. Reflectance: When measured in the red spectral range between 630 nanometers and 675 nanometers, the minimum white space reflectance (Rs) must be greater than 50 percent, and the maximum bar reflectance (Rb) must be less than 25 percent. The minimum print reflectance difference (RsRb) is 40 percent. The measurements must be made using a USPS-specified reflectance meter or a USPS-approved barcode verifier.

d. Barcode Quality: At least 70 percent of the mailer and privately printed barcodes must measure American National Standards Institute (ANSI) grade A or B, and none of the remaining portion can measure lower than ANSI grade C. Information concerning ANSI guideline X3.182–1990 may be obtained from Guideline for Bar Code Print Quality, American National Standards Institute, 11 W 42nd St, New York NY 10036–8002; telephone 212–642–4900; web site ansi.org.

e. Specifications: The symbol construction is based on AIM Uniform Symbology specifications:

(1) Uniform Symbology Specification, USS Code 128.

(2) Uniform Symbology Specification, USS Code I 2 of 5.

These specifications can be obtained from: AIM, Inc., 634 Alpha Dr, Pittsburgh PA 15238–2802; telephone: 412–963–8588 (ask for Technical Department); web site aimi.org.

2.4 Barcode Identification

The following applies to human-readable numbers:

a. A human-readable numeric representation of the barcode must appear no less than 0.125 inch and no more than 0.5 inch below the barcode. The human-readable number must be printed in OCR–A readable font size 1, 10 characters per inch, centered in a 1–11/16 by 5/8 inch unprinted area of the label. The character separation in the groups of digits must not be less than 0.017, and the centerline distance must not be less than 0.09 inch (character separation is the horizontal distance between the adjacent boundaries of the characters). If a space is not desired, the character separation may not be more than 0.07 inch. If a space is desired, the character separation must be more than 0.094 inch, but no more than 0.20 inch. Human-readable numbers must be parsed in groups of four digits.

b. For the special services labels, the human-readable information encoded in the Package Identification Code (PIC) must meet the dimensional requirements below.

NOT TO SCALE

c. The human-readable representation of the barcode must conform to the following specifications:

(1) The human-readable representation of the barcode must be placed below the bottom clear zone of the barcode.

(2) The font must be OCR–A readable font size 1.

d. Parsing: The human-readable representation of the barcode must be parsed into groups of four digits with the remaining digits grouped at the end.

2.5 Label Certification

Vendors or mailers who print barcoded labels must be certified by the Postal Service prior to mailing. For certification, evaluation, and approval, a vendor or mailer must forward 20 barcoded labels generated by each printer to Barcode Certification, National Customer Support Center, U.S. Postal Service, 6060 Primacy Pkwy Ste 201, Memphis TN 38188–0001. If barcode print quality falls out of tolerance after approval, the mailer will be contacted by the Postal Service, and an effort will be made to jointly resolve the problem. Should circumstances warrant, producing and using privately printed labels may be discontinued until a mailer's printer(s) is re-certified.

2.6 Service Type Code (STC)

A Service Type Code (STC) must be used as the first two characters in each barcode on any privately printed special services form. The following services require these codes:

a. Certified Mail: 71.

b. Insured Mail: 73.

c. Registered Mail: 77.

d. Return Receipt for Merchandise Mail: 81

2.7 Check Digit Algorithms

The USS–128 Subset C 20-digit barcode Package Identification Code (PIC) uses a weighted MOD 10 check digit. The weighted MOD 10 check digit for these forms may be calculated by listing in positional order digit number 1 up to and including the appropriate two-digit Service Type Code. Digit positions are numbered from right to left for this calculation so that the weighted MOD 10 check digit is always listed in position 1. For example, assume that a Certified Mail Label PIC number is 71123456789123456 78?, consisting of:

a. The Service Type Code = 71

b. The Customer ID (DUNS (registered trademark) number) = 123456789

c. The eight-digit Sequential Package ID = 12345678

d. A weighted module 10 check digit = ?

The weighted MOD 10 check digit is calculated using the following steps:

Step 1: Set up a two-row matrix, labeled 20 through 1, 1 being the most significant position in the matrix (i.e., the rightmost position). Starting from the least significant position of the matrix (position 20), copy each digit of the PIC all the way to position 2 (excluding the position of the check digit shown in the example below by a ''?'').

Position	20	19	18	17	16	15	14	13	12	11	10	9	8	7	6	5	4	3	2	1
PIC	7	1	1	2	3	4	5	6	7	8	9	1	2	3	4	5	6	7	8	?

Note: The dimension length of the matrix (maximum number of cells) is always 20, including the cell for the check digit for the following labels:

a. Receipt for Certified Mail, PS Form 3800.

b. Receipt for Insured Mail, PS Form 3813–P.

c. Receipt for Registered Mail, PS Form 200.

d. Return Receipt for Merchandise, PS Form 3804.

Step 2: Starting from position 2 of the matrix, add up the values in the even-numbered positions.

Position	20	19	18	17	16	15	14	13	12	11	10	9	8	7	6	5	4	3	2	1
PIC	7	1	1	2	3	4	5	6	7	8	9	1	2	3	4	5	6	7	8	?

For the example: 7 + 1 + 3 + 5 + 7 + 9 + 2 + 4 + 6 + 8 = 52

Step 3: Multiply the result of Step 2 by 3. For the example: 52 × 3 = 156.

Step 4: Starting from position 3 of the matrix, add up the values in the odd-numbered positions, skipping position 1 because it is the position of the check digit.

Position	20	19	18	17	16	15	14	13	12	11	10	9	8	7	6	5	4	3	2	1
PIC	7	1	1	2	3	4	5	6	7	8	9	1	2	3	4	5	6	7	8	?

For the example: 1 + 2 + 4 + 6 + 8 + 1 + 3 + 5 + 7 = 37

Step 5: Add up the results for steps 3 and 4. For the example: 156 + 37 = 193.

Step 6: The check digit is the smallest number which when added to the result obtained through step 5, gives a number that is a multiple of 10.

For the example: 193 + X = 200, X = 7 = Check Digit.

In this example, 7 is the smallest number which when added to 193, results in a multiple of 10. Therefore, the check digit is 7.

* * * * *

An appropriate amendment to 39 CFR 111 to reflect these changes will be published if the proposal is adopted.

PART 20—[AMENDED]

1. The authority citation for 39 CFR part 20 continues to read as follows:

Authority: 5 U.S.C. 552(a); 39 U.S.C. 401, 404, 407, 408.

2. Amend the following sections of the International Mail Manual as set forth below:

Chapter 3 Special Services

* * * * *

320 Insurance

* * * * *

(Amend heading and text of 324.11 to read as follows:)

324.11 General Use

All international parcels must be numbered. PS Form 3813–P, Receipt for Insured Mail—Domestic-International (label), provides a numbered insurance label for the parcel and an identically numbered mailing receipt for the sender. Barcodes are printed in USS–128 Subset A format. The receipt is issued to the sender as proof of mailing and proof of payment of insurance fee. For volume mailers, use PS Form 3877, Firm Mailing Book for Accountable Mail, as sender's receipt. Only labels printed by the Postal Service may be used on international insured mail.

* * * * *

330 Registered Mail

* * * * *

334 Processing Requests

* * * * *

(Amend heading and text of 334.11 to read as follows:)

334.11 General Use

A receipt is issued for registered mail when it is accepted. For individual transactions, PS Form 3806, Receipt for Registered Mail, is used. When an average of three or more items are presented for registration at one time, PS Form 3877, Firm Mailing Book for Accountable Mail, may be used (see DMM S911.3.8). The registered number is determined by Label 200, Registered Mail, a preprinted, self-adhesive label with a number series of nine digits preceded by a Service Type Code of two

alpha characters, and followed by the Country Code of two alpha characters ''US.'' This label adheres to the USS–128 Subset A barcode symbology. Only labels printed by the Postal Service may be used on international registered mail.

* * * * *

385 Recorded Delivery

* * * * *

(Amend heading and text of 385.41 to read as follows:)

385.41 General Use

PS Form 8099, Receipt for Recorded Delivery, is used for recorded delivery. Barcodes for recorded delivery labels are printed in USS–128 Subset A. Only labels printed by the Postal Service may be used on recorded delivery mail.

* * * * *

Stanley F. Mires,

Chief Counsel, Legislative.

[FR Doc. 99–26062 Filed 10–5–99; 8:45 am]

BILLING CODE 7710–12–P

DEPARTMENT OF HEALTH AND HUMAN SERVICES

Health Resources and Services Administration

42 CFR Parts 57 and 58

Removal of Health Professions, Nursing, Public Health, and Allied Health Training Grant Program Regulations Under 42 CFR Parts 57 and 58

AGENCY: Health Resources and Services Administration, HHS.

ACTION: Notice of intent.

SUMMARY: The Health Resources and Services Administration (HRSA) is publishing notice of its intent to rescind and remove various Public Health Service (PHS) health professions, nursing, public health, and allied health training grant regulations from the Code of Federal Regulations (CFR) at 42 CFR parts 57 and 58. (The student loan program regulations in part 57 will not be removed.)

FOR FURTHER INFORMATION CONTACT: Steve Tise, Acting Chief, Planning, Evaluation and Legislation Branch, Office of Research and Planning, Bureau of Health Professions, Health Resources and Services Administration, 5600 Fishers Lane, Room 8–67, Rockville, MD 20857; telephone number (301) 443–2381.

SUPPLEMENTARY INFORMATION:. We are announcing our intent to remove by technical amendment (final rule) some of the Agency's health professions, nursing, public health, and allied health training grant program regulations under 42 CFR parts 57 and 58 from the Code of Federal Regulations. The statutory authorities of these regulations have been extensively amended since their issuance. Consequently, the regulations no longer reflect the current law.

This action will be announced in the Department's October 1999 Regulatory Plan and the Semiannual Unified Agenda of Federal Regulatory and Deregulatory Actions, published in the **Federal Register**.

Dated: September 23, 1999.

Claude Earl Fox,

Administrator.

[FR Doc. 99–25792 Filed 10–5–99; 8:45 am]

BILLING CODE 4160–15–P

DEPARTMENT OF HEALTH AND HUMAN SERVICES

Health Care Financing Administration

42 CFR Part 447

[HCFA–2004–P]

RIN 0938–AI70

Medicaid Program; Flexibility in Payment Methods for Services of Hospitals, Nursing Facilities, and Intermediate Care Facilities for the Mentally Retarded

AGENCY: Health Care Financing Administration (HCFA), HHS.

ACTION: Proposed rule.

SUMMARY: This rule proposes to amend the Medicaid regulations that deal with payment for the services of hospitals and long-term care facilities. It proposes to remove all references to regulations based on the Boren Amendment and to add more flexible rules for States changing rates or payment methodologies for hospitals and long-term care facilities. These revisions will conform the regulations to the Social Security Act, as revised by section 4711 of the Balanced Budget Act of 1997.

DATES: Comments will be considered if we receive them at the appropriate address, as provided below, no later than 5 p.m. on December 6, 1999.

ADDRESSES: Department of Health and Human Services, Attention: HCFA–2004–P, P.O. Box 7517, Baltimore, MD 21207–5187

If you prefer, you may deliver an original and 3 copies of your written comments to one of the following addresses:

Room 443–G, Hubert H. Humphrey Building, 200 Independence Avenue, SW., Washington, DC, or

Room C5–09–26, 7500 Security Boulevard, Baltimore, Maryland.

Because of staffing and resource limitations, we cannot accept comments by facsimile (FAX) transmission. In commenting please refer to file code HCFA–2004–P. Comments received timely will be available for inspection as they are received, generally beginning approximately three weeks after publication of a document, in Room 309–G of the Department's offices at 200 Independence Avenue, SW., Washington D.C., on Monday through Friday of each week from 8:30 a.m. to 5 p.m. (telephone: (202) 690–7890).

FOR FURTHER INFORMATION CONTACT: Marge Lee, (410) 786–4361.

SUPPLEMENTARY INFORMATION: Copies: To order copies of the **Federal Register** containing this document, send your request to: New Orders, Superintendent of Documents, P.O. Box 371954, Pittsburgh, PA 15250–7954.

Specify the date of the issue requested and enclose a check or money order payable to the Superintendent of Documents, or enclose your Visa or Master Card number and expiration date. Credit card orders can also be placed by calling the order desk at (202) 512–1800 or by faxing to (202) 512–2250. The cost for each copy is $8. As an alternative, you can view and photocopy the **Federal Register** document at most libraries designated as Federal Depository Libraries and at many other public and academic libraries throughout the country that receive the **Federal Register**.

This **Federal Register** document is also available from the **Federal Register** online database through GPO Access, a service of the U.S. Government Printing Office. Free public access is available on a Wide Area Information Server (WAIS) through the Internet and via asynchronous dial-in. Internet users can access the database by using the World Wide Web; the Superintendent of Documents home page address is http://www.access.gpo.gov/nara/index.html, by using local WAIS client software, or by telnet to swais.access.gpo.gov, then log in as guest (no password required). Dial-in users should use communications software and modem to call (202) 512–1661; type swais, then log in as guest (no password required).

I. Background

A. The Boren Amendment

The Social Security Act (the Act) was amended by section 962 of Public Law

96–499 (OBRA '80) and section 2173 of Public Law 97–35 (OBRA '81), known collectively as the Boren amendment, that became effective on October 1, 1980 and October 1, 1981, respectively. ''Boren'' required the State agencies to pay hospitals, nursing facilities (NF), and intermediate care facilities for the mentally retarded (ICF/MR), with rates that were ''* * * reasonable and adequate to meet the costs which must be incurred by efficiently and economically operated facilities in order to provide care and services in conformity with applicable State and Federal laws, regulations, and quality and safety standards * * *''. State agencies were required to find, and make assurances satisfactory to the Secretary, that their rates met those requirements and that individuals eligible for medical assistance had reasonable access to inpatient services of adequate quality.

The Balanced Budget Act of 1997 (BBA) repealed the Boren amendment effective October 1, 1997. The Boren amendment still applies to payments for items and services furnished before October 1, 1997; however, we recognize that the intent in repealing the Boren amendment was to reduce our role in the rate-setting process for inpatient hospital and long-term care facility payments and to increase State flexibility in this area. In light of the less restrictive requirements now in place, we are committed to working with State agencies to expedite the resolution of outstanding Boren issues in existing pending amendments.

B. Effects of the Balanced Budget Act of 1997

The BBA, which became effective on October 1, 1997, repealed sections 1902(a)(13)(A), (13)(B), and (13)(C) of the Act. Many of the Federal requirements related to the State plan amendment process for institutional payment have been eliminated, with the intent of allowing greater State flexibility in setting payment rates. State agencies no longer need to make an annual finding that their payment rates are reasonable and adequate to meet the costs that must be incurred by efficiently and economically operated providers. In addition, for State plan amendments involving institutional payment with proposed effective dates of October 1, 1997 and beyond, State agencies are not required to submit assurances and related rate information to us.

Although these requirements were based on the Boren amendment and therefore were eliminated with the Boren amendment repeal, we want to clarify that certain requirements remain unchanged. All of the regulations in 42 CFR 447.252, 447.257, 447.271, and 447.280 continue to apply to payment rates for inpatient hospital and long-term care services. Other requirements that continue, but are changed due to the new public process requirements, are discussed in the ''Provisions of this Proposed Rule'' section below.

The Omnibus Budget Reconciliation Act of 1987 (OBRA '87) comprehensively revised the statutory authority that applies to nursing homes participating in Medicaid. This revision, often referred to as Nursing Home Reform, responded to general concern about the quality of nursing home care paid for by the Medicaid and Medicare programs, as well as findings and recommendations of a 1986 Institute of Medicine report. The repeal of the Boren amendment eliminated the requirement that States provide an assurance that, effective October 1, 1990, their rates ''take into account the costs of complying with subsections (b) [other than paragraph (3)(F) thereof], (c) and (d) of section 1919 of the Act and provide, in the case of a nursing facility with a waiver under section 1919(b)(4)(C)(ii) of the Act for an appropriate reduction to take into account the lower costs (if any) of the facility for nursing care.'' However, State agencies are still required to comply with all of the subsections of section 1919 of the Act. The repeal of the Boren amendment has not relieved States of the responsibility of promoting quality of care for their beneficiaries served in nursing homes.

We are concerned about the quality of care in nursing homes and ICFs/MR and continue to seek ways to ensure high quality of care in these settings. Towards that end, we are soliciting comments from consumers and their representatives, providers, and States on including a discussion of how quality of care will be maintained as part of the State agency's justification of the new payment rates.

We want to clarify our position on the public notice requirements in § 447.205. We have reviewed our past position and have concluded that while these requirements still have continuing validity with respect to non-institutional providers, they have diminished relevance to Medicaid institutional payment rates. The public notice requirements in § 447.205 were applied to Boren amendment payment rates because section 1902(a)(13) of the Act did not speak to the process by which State agencies were to adopt payment rates. Since this provision of the statute was silent on this process, we viewed the public notice requirements as being applicable to this part of the State agency's program. However, with the repeal of the Boren amendment, we now have in section 4711 of the BBA a provision that specifies the process that State agencies are to employ in establishing rates for inpatient hospitals and long-term care facilities. Therefore, with respect to inpatient hospital and long-term care facility payments, the public notice requirements in § 447.205 have been superseded. Accordingly, we propose to make a change to the text at § 447.205(a) to clarify that the requirements in that section no longer apply to institutional payments.

Because we are now clarifying that § 447.205 has applicability only to non-institutional services, we want to be certain that the public realizes that the exceptions that previously would have enabled States to be excused from providing public notice would no longer apply. Thus, the provisions, at paragraph (b), that would excuse a State from compliance with the otherwise applicable public notice requirements when changes are needed to conform payment rates to Medicare methods or levels of reimbursement, or when changes are required by a court order, would have force only with respect to non-institutional services. Because section 4711 requires that States engage in a public process that entails the publication of proposed and final rates, methodologies, and justifications whenever a State wishes to make payment rate changes, it does not seem to account for the kinds of exceptions set out in the current rule nor any other type of exceptions. Accordingly, we are making clear in the rule that the exceptions to public notice set out in § 447.205(b) only would apply to non-institutional payment rates.

We want to clarify the circumstances in which a change in payment rates for inpatient hospital and long-term care facility services would not be subject to the public process requirements set forth in section 4711 of the BBA. If a State agency has a methodology in its State plan that allows for rates to change solely due to the application of an objective indicator such as the CPI, then those rates, that is, the periodic update, the underlying methodologies, and justifications do not need to be published. If, however, rates change for any other reason, including any change in the payment methods and standards, then those rates, methodologies, and justifications need to be published in accordance with the State's public process.

It is our intent to provide substantial flexibility to State agencies in development of a public process that fulfils the requirements and purposes of section 4711 of the BBA. The least burdensome approach to having State agencies assure us that they have in place an acceptable public process is for State agencies to submit a preprint page that becomes a part of the State plan and indicates that the State agency has in place, and uses, a public process which meets the requirements of section 4711 of the BBA. Alternatively, State agencies may indicate elsewhere in the State plan that they have in place, and use, a public process that meets the requirements of section 4711 of the BBA. This information will only need to be submitted to us once, and once approved, will become part of the State plan. During implementation of this provision, we weighed carefully the balance between maximizing State flexibility and maintaining appropriate oversight of Federal Medicaid expenditures. The repeal of the Boren based regulatory provisions through this rule, significantly reduces the burden on State agencies seeking Federal financial participation for institutional services. Previously, each time a State agency chose to amend its methods and standards for institutional payments, the State agency had to include in its amendment, a five page check list indicating its compliance with over a dozen regulatory provisions, as well as provide information on the rate in effect as a result of the amendment. With this regulation, we propose to require State agencies to submit one page each for their inpatient hospital and long term care sections of their State plan. These pages do not contain specific rate information, but rather provide formal assurance to us that the State agency is in compliance with section 4711. Furthermore, the proposed options available to the State agencies in complying with he public process requirements of section 4711 provide State agencies with additional flexibility. State agencies may choose to implement one of three suggested public processes, or create a similar public process that conforms with section 4711.

II. Provisions of This Proposed Rule

The purpose of this proposed rule is to clarify in the Code of Federal Regulations the increased State flexibility in setting payment rates for inpatient hospital and long-term care services required through section 4711 of the BBA.

We propose to amend § 447.250 by removing the requirement that States ''* * * pay for inpatient hospital and long-term care services through rates that the State finds, and makes assurances satisfactory to the Secretary, are reasonable and adequate to meet the costs which must be incurred by efficiently and economically operated facilities in order to provide care and services in conformity with applicable State and Federal laws and regulations, and quality and safety standards.'' We also propose to add to that same section, language that would require the State agency to develop and use a public process to determine rates and publish proposed and final rates, the underlying methodologies, and justification for the rates, and also to give interested parties a reasonable opportunity for review and comment on the proposed rates, methodologies, and justifications.

The State agency will comply with this provision if it elects to use an administrative process similar to the Federal Administrative Procedures Act, that satisfies the requirements for a public process in developing and inviting comment. This will allow State agencies the flexibility to follow current State public procedures. If a State's public process is not currently being applied to rate setting, or does not currently include a comment period, then the State agency would need to modify the process for purposes of meeting the requirements in this section.

Alternatively, State agencies may elect to use a public process other than their regular administrative procedures. Examples of what we consider to be an acceptable public process include the following:

- Hold one or more public hearings, at which the proposed rates, methodologies, and justifications are described and made available to the public, and time is provided during which comments can be received. Hold one or more additional public hearings, at which the final rates, methodologies, and justifications are described and made available to the public.
- Use a commission or similar process, where meetings are open to members of the public, in the development of proposed and final rates, methodologies, and justifications.
- Include notice of the intent to submit a State plan amendment in newspapers of general circulation, and provide a mechanism for members of the public to receive a copy of the proposed and final rates, methodologies, and justifications underlying the amendment, and an opportunity, which shall not be less than 30 days prior to the proposed effective date, to comment on the proposed rates, methodologies, and justifications.
- Include any other similar process for public input that would afford an interested party a reasonable opportunity to learn about the proposed and final rates, methodologies, and justifications, and to comment on the proposed rates, methodologies, and justifications.

State agencies will be required to indicate in the State plan that they have in place a public process that meets the requirements of section 1902(a)(13)(A) of the Act. This information need only be submitted once, and States may use the preprint page that we provide, which makes this statement, or include the language from the preprint page in their State plan at an appropriate location. In the case of hospitals, these rates must take into account the situation of hospitals that serve a disproportionate number of low income patients with special needs.

While the intent in repealing the Boren amendment was to permit States maximum flexibility in the rates they establish for institutional services, section 4711 of the BBA is intended to assure that the processes established by the State agency for setting those rates will be conducted in a public manner, with meaningful opportunities for public input. Therefore, we are adding to § 447.251, for purposes of this subpart, a definition of the word ''published.'' We interpret the word ''published'' to mean ''at least, produced and made available in hard copy and, if possible, electronically, such that any interested party may readily obtain a copy of the proposed and final rates, the underlying methodologies, and justifications.'' We feel that a definition which provides specific guidance on what we consider acceptable forms of publication of rates, the methodologies underlying the rates, and the justifications is fairer and more workable than the course we initially recommended after the enactment of the BBA. We recognize that this definition of ''published'' differs from the guidance we sent to State agencies in our letter of December 10, 1997 regarding the repeal of the Boren amendment. In that letter, we indicated that ''published'' means ''made public'', without requiring State agencies to issue an actual written publication to meet the new public process requirements. However, we specifically want to solicit public comment on this proposed change in the definition of ''published''.

We are removing §§ 447.253 and 447.255 from the text. The requirements contained in these sections are no longer applicable to the setting of institutional rates.

We are adding a new § 447.254 to address the new public process that the State agencies must have in place to satisfy the requirements of the BBA. In § 447.254(a) we describe the steps in the public process, indicating that proposed rates, methodologies underlying the establishment of such rates and the justifications for the rates must be published prior to the proposed effective date, giving a reasonable opportunity for review and comment. State agencies may elect to apply the notice periods specified in their State general administrative procedures acts. The final rates and the associated methodologies and justifications must also be published, but may be published following the effective date.

In § 447.254(b) we explain that State agencies must indicate to us that they have in place a public process that meets the requirements of § 447.254(a). This language is to be submitted to us only one time for approval. Once approved, the language will become a part of the State plan.

In § 447.256, we have removed the reference to repealed § 447.253 and replaced it with a reference to the new § 447.254.

In § 447.272, we have removed the reference to repealed § 447.253(B)(1)(ii)(A) and replaced it with a reference to section 1902(a)(13)(A)(iv) of the Act.

III. Response to Comments

Because of the large number of items of correspondence we normally receive in response to **Federal Register** documents published for comment, we are not able to acknowledge or respond to them individually. We will consider all comments we receive by the date and time specified in the ''COMMENT DATE'' section of this preamble, and, when we proceed with a subsequent document, we will respond to the comments in the preamble to that document.

IV. Collection of Information Requirements

Under the Paperwork Reduction Act of 1995, we are required to provide 60-day notice in the **Federal Register** and solicit public comment before a collection of information requirement is submitted to the Office of Management and Budget (OMB) for review and approval. In order to fairly evaluate whether an information collection should be approved by OMB, section 3506(c)(2)(A) of the Paperwork Reduction Act of 1995 requires that we solicit comment on the following issues:

- The need for the information collection and its usefulness in carrying out the proper functions of our agency.
- The accuracy of our estimate of the information collection burden.
- The quality, utility, and clarity of the information to be collected.
- Recommendations to minimize the information collection burden on the affected public, including automated collection techniques.

Therefore, we are soliciting public comment on each information collection requirement discussed below.

Section 447. 252 State Plan Requirements

Section 447. 252(b) states that the State plan must specify comprehensively the methods and standards used by the State agency to set payment rates in a manner consistent with § 430.10. This section requires State agencies to maintain in their State plan a current description of their payment methods and standards for institutional services. State agencies generally amend their State plans between one and five times during the fiscal year through State plan amendments submitted to us for review and approval.

Section 447.254 Public Process Requirements

Section 447.254(b) requires that the State agency report to us that it has in place a public process for determination of payment rates under the plan for hospital services and long-term care facility services.

This information is submitted by State agencies on a one-time basis for the hospital payment section of the Medicaid State plan and a one-time basis for the long-term care payment section of the Medicaid State plan. It requires the submission of a single sentence in each instance. State agencies have the option of signing a preprinted statement or they may copy the statement into their plan and initialize the page with the statement. Once approved, this statement will become part of the State plan. Our best estimate is that it will take ¼ hour or less for a State agency to submit each statement. At two per State (one each for the hospital payment and long-term care payment sections of the Medicaid State plan), that would result in ½ hour for each of 54 States, or approximately 27 hours total.

We have submitted a copy of this proposed rule to OMB for its review of the information collection requirement described above. This requirement is not effective until it has been approved by OMB.

If you comment on this information collection, please mail copies directly to the following:

Health Care Financing Administration, Office of Information Services, Security and Standards Group, Division of HCFA Enterprise Standards Room N2–14–26, 7500 Security Boulevard, Baltimore, MD 21244–1850. Attention:: Julie Brown, HCFA–2004–P, and

Office of Information and Regulatory Affairs, Office of Management and Budget, Room 10235, New Executive Office building, Washington, DC 20503 Attn: Allison Eydt, HCFA Desk Officer.

V. Regulatory Impact Statement

We have examined the impacts of this proposed rule as required by Executive Order 12866 and the Regulatory Flexibility Act (RFA) (Public Law 96–354). Executive Order 12866 directs agencies to assess all costs and benefits of available regulatory alternatives and, when regulation is necessary, to select regulatory approaches that maximize net benefits (including potential economic, environmental, public health and safety effects, distributive impacts, and equity). The RFA requires agencies to analyze options for regulatory relief of small businesses. For purposes of the RFA, small entities include small businesses, non-profit organizations, and government agencies. Most hospitals and most other providers and suppliers are small entities, either by non-profit status or by having revenues of $5 million or less annually. For purposes of the RFA, all hospitals and long-term care facilities are considered to be small entities. Individuals and States are not included in the definition of a small entity.

Section 1102(b) of the Act, requires us to prepare a regulatory impact analysis if a rule may have a significant impact on the operations of a substantial number of small rural hospitals. Such an analysis must conform to the provisions of section 603 of the RFA. For purposes of section 1102(b) of the Act, we define a small rural hospital as a hospital that is located outside of a Metropolitan Statistical Area and has fewer than 50 beds.

We estimate that the following savings are attributable to the repeal of the Boren amendment.

[Amounts in Millions]

	FY1999	FY2000	FY2001	FY2002	FY2003
Federal	35	75	115	160	205
State	30	55	90	120	155
Total	65	130	205	280	360

These savings have been included in the Medicaid baseline spending projections for the President's FY 1999 budget.

The repeal of the Borden Amendment, by the Balanced Budget Act of 1997, is the reason for the estimated savings. The only regulatory requirement imposed on the States, by this rule, deals with the public notice process, which is unlikely to have any impact.

Nevertheless, although the savings described above are directly attributed to the statutory change, and not to any rule placed on states in conjunction with the statute, this proposed regulation is economically significant and will have an impact of more than $100 million starting in FY 2000.

In accordance with the provisions of Executive Order 12866, this regulation was reviewed by the Office of Management and Budget.

VI. Anticipated Effects

In December of 1997, we issued written guidance to State agencies informing them of the options available to them in complying with the new statute. We provided a model preprint page that State agencies may use in order to indicate to us that they have in place, and use a public process which complies with the new statute. Over 80% of the State agencies have voluntarily complied with our guidance, having implemented rates established under the State's new public process.

We have reviewed this proposed rule under the threshold criteria of Executive order 13132, Federalism. We have determined that it significantly affects the rights, roles and responsibilities of States.

List of Subjects in 42 CFR Part 447

Accounting, Administrative practice and procedure, Drugs, Grant programs-health, Health facilities, Health professions, Medicaid, Reporting and recordkeeping requirements, Rural areas.

42 CFR chapter IV would be amended as follows:

PART 447—PAYMENTS FOR SERVICES

1. The authority citation for part 447 continues to read as follows:

Authority: Sec. 1102 of the Social Security Act (42 U.S.C. 1302), unless otherwise noted.

2. In § 447.205 B, the section heading and paragraph (a) are revised to read as follows:

§ 447.205 Public notice of changes in Statewide methods and standards for setting payment rates for non-institutional services.

(a) *When notice is required.* Except as specified in paragraph (b) of this section, the agency must provide public notice of any significant proposed change in its methods and standards for setting payment rates for non-institutional services.

30. Section § 447.250 is revised to read as follows:

§ 447.250 Basis and purpose.

(a) This subpart implements section 1902(a)(13)(A) of the Act, which requires States to use a public process for determining rates; publish proposed and final rates, the methodologies underlying the rates, and the justifications for the rates; and give interested parties a reasonable opportunity for review and comment on the proposed rates, methodologies, and justifications. In the case of hospitals, such rates must take into account the situation of hospitals that serve a disproportionate number of low-income patients with special needs.

(b) Section 447.272(a)(2) implements section 1902(a)(30) of the Act, which requires that payments be consistent with efficiency, economy, and quality of care.

(c) Section 447.271 implements section 1903(i)(3) of the Act, which requires that payments for inpatient hospital services not exceed the hospital's customary charges.

(d) Section 447.280 implements section 1913(b) of the Act, which concerns payment for long-term care services furnished by swing-bed hospitals.

4. Section § 447.251 is revised to read as follows:

§ 447.251 Definitions.

For the purposes of this subpart—

Long-term care facility services means intermediate care facility services for the mentally retarded (ICF/MR) and nursing facility (NF) services.

Provider means an institution that furnishes inpatient hospital services or an institution that furnishes long-term care facility services.

Published means, at least, produced and made available in hard copy and, if possible, electronically, such that any interested party may readily obtain a copy of the proposed and final rates, the underlying methodologies, and justifications.

5. Section 447.252 is republished to read as follows:

§ 447.252 State plan requirements.

(a) The plan must provide that the requirements of this subpart are met.

(b) The plan must specify comprehensively the methods and standards used by the agency to set payment rates in a manner consistent with § 430.10 of this chapter.

(c) If the agency chooses to apply the cost limits established under Medicare (see § 413.30 of this chapter) on an individual provider basis, the plan must specify this requirement.

§ 447.253 [Removed and Reserved]

6. Section 447.253 is removed and reserved.

7. Section 447. 254 is added to read as follows:

§ 447.254 Public process requirements.

(a) *Steps in the process.* The Agency must have in place, and use, a public process for determination of rates of payment under the plan for hospital services and long-term care facility services under which proposed and final rates, the methodologies underlying the establishment of such rates, and justifications for the rates are published. The public process must give providers, beneficiaries and their representatives, and other concerned State residents a reasonable opportunity for review and comment on the proposed rates, methodologies, and justifications prior to the proposed effective date. The final rates, methodologies and justifications may be published after the proposed effective date of the rates. Further, in the case of hospitals, such rates must take into account (in a manner consistent with section 1923 of the Act) the situation of hospitals that serve a disproportionate

number of low-income patients with special needs.

(b) *Report to HCFA.* The State agency must indicate to HCFA that it has in place a public process that meets the requirements of paragraph (a) of this section. This language is to be submitted to HCFA only one time for approval. Once approved, the language will become a part of the State plan.

§ 447.255 [Removed and Reserved]

8. Section 447.255 is removed and reserved.

9. Section 447.256 is revised to read as follows:

§ 447.256 Procedures for HCFA action on State plan amendments.

(a) *Criteria for approval.* (1) HCFA approval action on State plans and State plan amendments is taken in accordance with subpart B of part 430 of this chapter and sections 1116, 1902(b) and 1915(f) of the Act.

(2) In the case of State plan and plan amendment changes in payment methods and standards, HCFA bases its approval on the Medicaid agency's satisfaction of the requirements of § 447.254 as well as the other requirements of this subpart.

(b) *Time limit.* HCFA sends a notice to the agency of its determination as to whether the State plan amendment is acceptable within 90 days of the date HCFA receives the State plan amendment. If HCFA does not send a notice to the agency of its determination within this time limit and the provisions in paragraph (a) of this section are met, the State plan amendment will be deemed accepted and approved.

(c) *Effective date.* A State plan amendment that is approved becomes effective not earlier than the first day of the calendar quarter in which an approvable amendment is submitted in accordance with § 430.20 of this chapter.

10. Section 447.257 is republished to read as follows:

§ 447.257 FFP: Conditions relating to institutional reimbursement.

FFP is not available for a State's expenditures for hospital inpatient or long-term care facility services that are in excess of the amounts allowable under this subpart.

11. Section 447.271 is republished to read as follows:

§ 447.271 Upper limits based on customary charges.

(a) Except as provided in paragraph (b) of this section, the agency may not pay a provider more for inpatient hospital services under Medicaid than the provider's customary charges to the general public for the services.

(b) The agency may pay a public provider that provides services free or at a nominal charge at the same rate that would be used if the provider's charges were equal to or greater than its costs.

12. In § 447.272, paragraph (c) is revised to read as follows:

§ 447.272 Application of upper payment limits.

* * * * *

(c) *Disproportionate share.* The upper payment limitation established under paragraphs (a) and (b) of this section does not apply to payment adjustments made under a State plan to hospitals found to serve a disproportionate number of low-income patients with special needs as provided in section 1902(a)(13)(A)(iv) of the Act. Disproportionate share hospital payments shall be subject to the following limits:

(1) The aggregate DSH limit using the Federal share of the disproportionate share hospital limits under section 1923(f) of the Act;

(2) The hospital-specific DSH limits in section 1923(g) of the Act; and

(3) The aggregate DSH limit for institutions for mental disease (IMDs) under section 1923(h) of the Act.

13. Section 447.280 is republished to read as follows:

§ 447.280 Hospital providers of NF services (swing-bed hospitals).

(a) *General rule.* If the State plan provides for NF services furnished by a swing-bed hospital, as specified in §§ 440.40(a) and 440.150(f) of this chapter, the methods and standards used to determine payment rates for routine NF services must—

(1) Provide for payment at the average rate per patient day paid to NFs, as applicable for routine services furnished during the previous calendar year: or

(2) Meet the State plan and payment requirements described in this subpart, as applicable.

(b) *Application of the rule.* The payment methodology used by a State to set payment rates for routine NF services must apply to all swing-bed hospitals in the State.

(Catalog of Federal Domestic Assistance Program No. 93.778, Medical Assistance Program)

Dated: April 1, 1999.

Nancy Ann Min DeParle,

Administrator, Health Care Financing Administration.

Approved: May 25, 1999.

Donna E. Shalala,

Secretary.

[FR Doc. 99–25788 Filed 10–5–99; 8:45 am]

BILLING CODE 4120–01–P

FEDERAL COMMUNICATIONS COMMISSION

47 CFR Part 73

[DA 99–2025, MM Docket No. 99–297, RM–9726]

Digital Television Broadcast Service; Oklahoma City, OK

AGENCY: Federal Communications Commission.

ACTION: Proposed rule.

SUMMARY: The Commission requests comments on a petition filed by Ohio/Oklahoma Hearst-Argyle Television, Inc., permittee of station KOCO–TV, NTSC Channel 5, Oklahoma City, Oklahoma, proposing the substitution of DTV Channel 7 for station KOCO–TV's assigned DTV Channel 16. DTV Channel 7 can be substituted and allotted to Oklahoma City, Oklahoma, as proposed, in compliance within the principle community requirements of Section 73.625(a) at coordinates 35–33–45 N. and 97–29–24 W. DTV Channel 7 can be allotted to Oklahoma City with a power of 45.0 (kW) and a height above average terrain (HAAT) of 446 meters.

DATES: Comments must be filed on or before November 26, 1999, and reply comments on or before December 13, 1999.

ADDRESSES: Federal Communications Commission, 445 12th Street, S.W., Room TW–A325, Washington, DC 20554. In addition to filing comments with the FCC, interested parties should serve the petitioner, or its counsel or consultant, as follows: Mark J. Prak, Esq., Brooks, Pierce, McLendon, Humphrey & Leonard, L.L.P., Post Office Box 1800, Raleigh, North Carolina 27602 (Counsel for Ohio/Oklahoma Hearst-Argyle Television, Inc.).

FOR FURTHER INFORMATION CONTACT: Pam Blumenthal, Mass Media Bureau, (202) 418–1600.

SUPPLEMENTARY INFORMATION: This is a synopsis of the Commission's Notice of Proposed Rule Making, MM Docket No. 99–297, adopted September 30, 1999, and released October 4, 1999. The full

text of this Commission decision is available for inspection and copying during normal business hours in the FCC Reference Center 445 12th Street, S.W., Washington, DC. The complete text of this decision may also be purchased from the Commission's copy contractor, International Transcription Services, Inc., (202) 857–3800, 1231 20th Street, NW, Washington, DC 20036.

Provisions of the Regulatory Flexibility Act of 1980 do not apply to this proceeding.

Members of the public should note that from the time a Notice of Proposed Rule Making is issued until the matter is no longer subject to Commission consideration or court review, all *ex parte* contacts are prohibited in Commission proceedings, such as this one, which involve channel allotments. See 47 CFR 1.1204(b) for rules governing permissible *ex parte* contacts.

For information regarding proper filing procedures for comments, see 47 CFR 1.415 and 1.420.

Federal Communications Commission.

Barbara A. Kreisman,

Chief, Video Services Division, Mass Media Bureau.

[FR Doc. 99–25973 Filed 10–5–99; 8:45 am]

BILLING CODE 6712–01–P

FEDERAL COMMUNICATIONS COMMISSION

47 CFR Part 73

[DA 99–2024, MM Docket No. 99–296, RM–9661]

Digital Television Broadcast Service; Klamath Falls, OR

AGENCY: Federal Communications Commission.

ACTION: Proposed rule.

SUMMARY: The Commission requests comments on a petition filed by California Oregon Broadcasting, Inc., licensee of station KOTI–TV, NTSC Channel 2, Klamath Falls, Oregon, requesting the substitution of DTV Channel 13 for its assigned DTV Channel 40. DTV Channel 13 can be substituted for DTV Channel 40 in compliance with the principle community coverage requirements of Section 73.625(a) at reference coordinates 42–05–48 N. and 121–37–57 W. DTV Channel 13 can be allotted to Klamath Falls with a power of 45.3 (kW) and a height above average terrain (HAAT) of 671 meters.

DATES: Comments must be filed on or before November 26, 1999, and reply comments on or before December 13, 1999.

ADDRESSES: Federal Communications Commission, 445 12th Street, SW, Room TW–A325, Washington, DC 20554. In addition to filing comments with the FCC, interested parties should serve the petitioner, or its counsel or consultant, as follows: Marnie K. Sarver, Kathleen A. Kirby, Attorneys, Wiley, Rein & Fielding, 1776 K Street, NW, Washington, DC 20006 (Counsel for California Oregon Broadcasting, Inc.).

FOR FURTHER INFORMATION CONTACT: Pam Blumenthal, Mass Media Bureau, (202) 418–1600.

SUPPLEMENTARY INFORMATION: This is a synopsis of the Commission's Notice of Proposed Rule Making, MM Docket No. 99–296, adopted September 30, 1999, and released October 4, 1999. The full text of this Commission decision is available for inspection and copying during normal business hours in the FCC Reference Center 445 12th Street, SW, Washington, DC. The complete text of this decision may also be purchased from the Commission's copy contractor, International Transcription Services, Inc., (202) 857–3800, 1231 20th Street, NW, Washington, DC 20036.

Provisions of the Regulatory Flexibility Act of 1980 do not apply to this proceeding.

Members of the public should note that from the time a Notice of Proposed Rule Making is issued until the matter is no longer subject to Commission consideration or court review, all *ex parte* contacts are prohibited in Commission proceedings, such as this one, which involve channel allotments. See 47 CFR 1.1204(b) for rules governing permissible *ex parte* contacts.

For information regarding proper filing procedures for comments, see 47 CFR 1.415 and 1.420.

Federal Communications Commission.

Barbara A. Kreisman,

Chief, Video Services Division, Mass Media Bureau.

[FR Doc. 99–25972 Filed 10–5–99; 8:45 am]

BILLING CODE 6712–01–P

FEDERAL COMMUNICATIONS COMMISSION

47 CFR Part 73

[DA 99–1973, MM Docket No. 99–293, RM–9720, RM–9721]

Radio Broadcasting Services; Canton and Saranac Lake, NY

AGENCY: Federal Communications Commission.

ACTION: Proposed rule.

SUMMARY: The Commission requests comments on two petitions concerning Saranac Lake, NY. Radio Vermont Classics, Inc., requests the substitution of Channel 227A for unoccupied and unapplied-for Channel 269A at Saranac Lake, NY, so as to remove the 1 kilometer short-spacing with its outstanding construction permit (BPH–980806IA). Radio Power, Inc. requests the substitution of Channel 268C2 for Channel 268A at Canton, NY, and the modification of Station WRCD's license to specify operation on the higher powered channel. Radio Power also requests the substitution of Channel 227A for Channel 269A at Saranac Lake to accommodate the Canton upgrade. Channel 227A can be allotted to Saranac Lake without the imposition of a site restriction, at coordinates 44–19–48 North Latitude and 74–08–00 West Longitude. Channel 268C2 can be allotted to Canton with a site restriction of 31.8 kilometers (19.8 miles) east, at coordinates 44–35–56 NL; 74–46–24 WL. Both Canton and Saranac Lake are located within 320 kilometers (200 miles) of the U.S.-Canadian border and require concurrence by the Canadian government as specially negotiated short-spaced allotments.

DATES: Comments must be filed on or before November 15, 1999, and reply comments on or before November 30, 1999.

ADDRESSES: Federal Communications Commission, 445 12th Street, S.W., Room TW–A325, Washington, DC 20554. In addition to filing comments with the FCC, interested parties should serve the petitioner, or its counsel or consultant, as follows: Nathaniel F. Emmons, Wiley, Rein & Fielding, 1776 K Street, NW, Washington, DC 20006 (Counsel to Radio Vermont); David G. O'Neil, Rini, Coran & Lancellotta, P.C., 1350 Connecticut Avenue, NW, Suite 900, Washington, DC 20036–1701 (Counsel to Radio Power).

FOR FURTHER INFORMATION CONTACT: Leslie K. Shapiro, Mass Media Bureau, (202) 418–2180.

SUPPLEMENTARY INFORMATION: This is a synopsis of the Commission's Notice of Proposed Rule Making, MM Docket No. 99–293, adopted September 15, 1999, and released September 24, 1999. The full text of this Commission decision is available for inspection and copying during normal business hours in the FCC Reference Center, 445 12th Street, SW, Washington, DC. The complete text of this decision may also be purchased from the Commission's copy contractor, International Transcription Services, Inc., (202) 857–3800, 1231 20th Street, NW, Washington, DC 20036.

Provisions of the Regulatory Flexibility Act of 1980 do not apply to this proceeding.

Members of the public should note that from the time a Notice of Proposed Rule Making is issued until the matter is no longer subject to Commission consideration or court review, all *ex parte* contacts are prohibited in Commission proceedings, such as this one, which involve channel allotments. See 47 CFR 1.1204(b) for rules governing permissible *ex parte* contacts.

For information regarding proper filing procedures for comments, see 47 CFR 1.415 and 1.420.

List of Subjects in 47 CFR Part 73

Radio broadcasting.

Federal Communications Commission.

John A. Karousos,

Chief, Allocations Branch, Policy and Rules Division, Mass Media Bureau.

[FR Doc. 99–25890 Filed 10–5–99; 8:45 am]

BILLING CODE 6712–01–P

FEDERAL COMMUNICATIONS COMMISSION

47 CFR Part 73

[DA 99–1850; MM Docket No. 99–279; RM–9716]

Radio Broadcasting Services; Greeley and Broomfield, CO

AGENCY: Federal Communications Commission.

ACTION: Proposed rule.

SUMMARY: This document requests comments on a petition for rule making filed on behalf of Chancellor Media/Shamrock Radio, Licensees L.L.C., licensee of Station KVOD–FM, Channel 223C1, Greeley, Colorado, requesting the reallotment of Channel 223C1 to Broomfield, Colorado, as that community's first local aural transmission service, and modification of the authorization for Station KVOD-FM to specify Broomfield as its community of license. Coordinates used for Channel 223C1 at Broomfield are 40–03–15 NL and 105–04–12 WL. The petitioner's modification proposal complies with the provisions of Section 1.420(i) of the Commission's Rules and therefore, we will not accept competing expressions of interest in the use of Channel 223C1 at Broomfield, Colorado, or require the petitioner to demonstrate the availability of an additional equivalent class channel.

DATES: Comments must be filed on or before November 1, 1999, and reply comments on or before November 16, 1999.

ADDRESSES: Secretary, Federal Communications Commission, Washington, DC 20554. In addition to filing comments with the FCC, interested parties should serve the petitioner's counsel, as follows: Kevin C. Boyle, and Trena L. Klohe, Esqs., Latham & Watkins, 1001 Pennsylvania Avenue, NW, Suite 1300, Washington, DC 20004.

FOR FURTHER INFORMATION CONTACT: Nancy Joyner, Mass Media Bureau, (202) 418–2180.

SUPPLEMENTARY INFORMATION: This is a synopsis of the Commission's Notice of Proposed Rule Making, MM Docket No. 99–279, adopted September 1, 1999, and released September 10, 1999. The full text of this Commission decision is available for inspection and copying during normal business hours in the FCC's Reference Information Center (Room CY–A257), 445 Twelfth Street, SW., Washington, DC. The complete text of this decision may also be purchased from the Commission's copy contractor, International Transcription Service, Inc., 1231 20th Street, NW., Washington, DC 20036, (202) 857–3800.

Provisions of the Regulatory Flexibility Act of 1980 do not apply to this proceeding.

Members of the public should note that from the time a Notice of Proposed Rule Making is issued until the matter is no longer subject to Commission consideration or court review, all *ex parte* contacts are prohibited in Commission proceedings, such as this one, which involve channel allotments. See 47 CFR 1.1204(b) for rules governing permissible *ex parte* contacts.

For information regarding proper filing procedures for comments, See 47 CFR 1.415 and 1.420.

Federal Communications Commission.

John A. Karousos,

Chief, Allocations Branch, Policy and Rules Division, Mass Media Bureau.

[FR Doc. 99–25888 Filed 10–5–99; 8:45 am]

BILLING CODE 6712–01–P

NATIONAL AERONAUTICS AND SPACE ADMINISTRATION

48 CFR Parts 1804, 1812 and 1852

Central Contractor Registration (CCR)

AGENCY: National Aeronautics and Space Administration (NASA).

ACTION: Proposed rule.

SUMMARY: This is a proposed rule to amend the NASA FAR Supplement (NFS) to include a requirement for vendors and contractors to register through the DoD Central Contractor Registration (CCR) System.

DATES: Comments should be submitted on or before December 6, 1999.

ADDRESSES: Interested parties should submit written comments to Diane Thompson, NASA Headquarters Office of Procurement, Analysis Division (Code HC), Washington, DC, 20546. Comments may also be submitted by email to dthompso@hq.nasa.gov.

FOR FURTHER INFORMATION CONTACT: Diane Thompson, (202) 358–0514, or dthompso@hq.nasa.gov.

SUPPLEMENTARY INFORMATION:

A. Background

NASA is in the process of converting to a new Agency-wide accounting software system that will include financial and procurement data. This new software system is referred to as the Integrated Financial Management (IFM) System and will allow NASA to carry out its financial management functions, execute financial operations of the Agency, and report on the Agency's financial status to internal and external customers. The IFM system requires that a specific number, referred to as the vendor number, be entered for each vendor. This identifier will be used by finance for payment purposes as well as by procurement for other business information such as size standard, company address, tax identification number and DUNS number. Currently, the Department of Defense requires all of its vendors to be registered in the CCR database. When a vendor registers in CCR, they are assigned a Commercial and Government Entity (CAGE) code, which is the vendor identifier that NASA has chosen for its new accounting software system.

B. Regulatory Flexibility Act

This proposed rule is not expected to have a significant economic impact on a substantial number of small entities within the meaning of the Regulatory Flexibility Act, 5 U.S.C. 601 *et seq.*, because an estimated two thirds of NASA vendors are already registered in the Defense Logistics Agency/Defense Logistics Information Service (DLA/DLIS) CCR System. Therefore, an initial Regulatory Flexibility Analysis has not been prepared. Comments from small entities concerning the affected NASA FAR Supplement subparts will be considered in accordance with 5 U.S.C. 601.

C. Paperwork Reduction Act

An Office of Management and Budget (OMB) approval for data collection is

being sought under 44 U.S.C. 3501, *et seq.*

List of Subjects in 48 CFR Parts 1804, 1812, 1852

Government procurement.

Tom Luedtke,

Associate Administrator for Procurement.

Accordingly, 48 CFR Parts 1804, 1812, and 1852 are proposed to be amended as follows:

1. The authority citation for 48 CFR Parts 1804, 1812, and 1852 continues to read as follows:

Authority: 42 U.S.C. 2473(c)(1).

PART 1804—ADMINISTRATIVE MATTERS

2. Subpart 1804.74 is added to read as follows:

Table of Contents

Subpart 1804.74—Central Contractor Registration

1804.7400 Scope .
1804.7401 Definitions.
1804.7402 Policy.
1804.7403 Procedures.
1804.7404 Solicitation provisions and contract clauses.

Authority: 42 U.S.C. 2473(c)(1).

Subpart 1804.74—Central Contractor Registration

1804.7400 Scope.

This subpart prescribes policies and procedures for requiring contractor registration in the DoD Central Contractor Registration (CCR) database.

1804.7401 Definitions.

''Central Contractor Registration (CCR) database,'' ''Data Universal Numbering System (DUNS) number,'' ''Data Universal Numbering System+4 (DUNS+4) number,'' ''Commercial and Government Entity (CAGE) Code,'' and ''Registered in the CCR database'' are defined in the clause at 1852.204–74, Central Contractor Registration.

1804.7402 Policy.

Prospective contractors must be registered in the CCR database, prior to any award of a contract, purchase order, basic agreement, basic ordering agreement, or blanket purchase agreement. This policy applies to all types of awards except the following:

(a) Purchases made with a Government-wide commercial purchase card.

(b) Awards made to foreign vendors for work performed outside of the United States.

(c) Purchases under FAR 6.302–2, Unusual and Compelling Urgency.

1804.7403 Procedures.

(a)(1) The contracting officer shall verify that the prospective awardee is registered in the CCR database using the DUNS number or, if applicable, the DUNS+4 number, via the Internet at http://www.ccr2000.com or by calling toll free: 888–CCR–2423 (888–227–2423), commercial: 616–961–5757.

(2) Verification of registration is not required for orders or calls placed under contracts, basic agreements, basic ordering agreements, or blanket purchase agreements in which vendor registration was verified at the time of award of the contract or agreement.

(b) If the contracting officer determines that a prospective awardee is not registered in the CCR database, the contracting officer shall—

(1) If delaying the acquisition would not be to the detriment of the Government, proceed to award after the contractor is registered;

(2) If delaying the acquisition would be to the detriment of the Government, proceed to award to the next otherwise successful registered offeror, with the written approval of the Procurement Officer; or

(3) If the offer results from an invitation for bids, determine the offer to be non-responsive and proceed to award to the next otherwise successful registered offeror.

(c) The contracting officer shall protect against improper disclosure of contractor CCR information.

1804.7404 Solicitation provisions and contract clauses.

Except as provided in 1804.7402, the contracting officer shall use the clause at 1852.204–74, Central Contractor Registration, in all solicitations and contracts, including those for commercial items.

PART 1812—ACQUISITION OF COMMERCIAL ITEMS

3. In section 1812.301, paragraphs (f)(i)(A), (B), (C), (D), (E), (F), (G), (H), (I), and (J) are redesignated as (f)(i)(B), (C), (D), (E), (F), (G), (H), (I), (J), and (K) and new paragraph ((f)(i)(A) is added to read as follows:

1812.301 Solicitation provisions and contract clauses for the acquisition of commercial items.

(f)(i) * * *

(A) 1852.204–74, Central Contractor Registration.

* * * * *

PART 1852—SOLICITATION PROVISIONS AND CONTRACT CLAUSES

4. Section 1852.204–74 is added to read as follows:

1852.204–74 Central Contractor Registration.

As prescribed in 1804.7404, insert the following clause:

Central Contractor Registration (XXX)

(a) *Definitions.* As used in this clause—

(1) *Central Contractor Registration (CCR) database* means the primary DoD repository for contractor information required for the conduct of business with NASA.

(2) *Data Universal Number System (DUNS) number* means the 9-digit number assigned by Dun and Bradstreet Information Services to identify unique business entities.

(3) *Data Universal Numbering System +4 (DUNS+4) number* means the DUNS number assigned by Dun and Bradstreet plus a 4-digit suffix that may be assigned by a parent (controlling) business concern. This 4-digit suffix may be assigned at the discretion of the parent business concern for such purposes as identifying sub-units or affiliates of the parent business concern.

(4) *Commercial Government and Entity Code (CAGE Code)* means—

(i) A code assigned by the Defense Logistics Information Service (DLIS) to identify a commercial or Government entity; or

(ii) A code assigned by a member of the North Atlantic Treaty Organization (NATO) that is recorded and maintained by DLIS in the CAGE master file.

(5) *Registered in the CCR database* means that all mandatory information, including the DUNS number or the DUNS+4 number, if applicable, and the corresponding CAGE code, is in the CCR database; the DUNS number and the CAGE code have been validated; and all edits have been successfully completed.

(b)(1) By submission of an offer, the offeror acknowledges the requirement that a prospective awardee must be registered in the CCR database prior to award, during performance, and through final payment of any contract resulting from this solicitation, except for awards to foreign vendors performing work outside of the United States.

(2) The Contracting Officer will verify that the offeror is registered in the CCR database.

(3) Lack of registration in the CCR database will make an offeror ineligible for award.

(4) DoD has established a goal of registering an applicant in the CCR database within 48 hours after receipt of a complete and accurate application via the Internet. However, registration of an applicant submitting an application through a method other than the Internet may take up to 30 days. Therefore, offerors that are not registered should consider applying for registration immediately upon receipt of this solicitation.

(c) The Contractor is responsible for the accuracy and completeness of the data within the CCR, and for any liability resulting from the Government's reliance on inaccurate or incomplete data. To remain registered in the

CCR database after the initial registration, the Contractor is required to confirm on an annual basis that its information in the CCR database is accurate and complete.

(d) Offerors and contractors may obtain information on registration and annual confirmation requirements via the Internet at http://www.ccr2000.com or by calling 888–CCR–2423 (888–227–2423).

(End of clause)

[FR Doc. 99–26040 Filed 10–5–99; 8:45 am]

BILLING CODE 7510–01–P

DEPARTMENT OF COMMERCE

National Oceanic and Atmospheric Administration

50 CFR Part 660

[I.D. 092999C]

Pelagics Fisheries of the Western Pacific Region

AGENCY: National Marine Fisheries Service (NMFS), National Oceanic and Atmospheric Administration (NOAA), Commerce.

ACTION: Notice of Intent to prepare an Environmental Impact Statement (EIS); Notice of Intent to prepare an Environmental Assessment (EA); scoping meetings; request for comments.

SUMMARY: NMFS announces its intention to prepare an EIS on Federal management of the fishery for pelagic species in the Exclusive Economic Zone (EEZ) waters of the Western Pacific Region. The scope of the EIS analysis will include all activities related to the conduct of the fishery authorized and managed under the Fishery Management Plan for the Pelagic Fisheries of the Western Pacific Region (FMP) and all amendments thereto. Additionally, NMFS announces its intention to prepare an EA on the fishery for pelagic species in the EEZ waters of the Western Pacific Region. The scope of the analysis of the EA will include all activities related to the conduct of the fishery for the 2-year period NMFS anticipates is necessary to prepare the EIS. Both the EIS and EA will examine the impacts of pelagics harvest on, among other things, sea turtles and seabirds.

NMFS will hold concurrent scoping meetings to provide for public input into the range of actions, alternatives, and impacts that the EIS and EA should consider. Scoping for the EIS and EA commences with publication of this document. In addition to holding the scoping meetings, NMFS is accepting written comments on the range of actions, alternatives, and impacts it should be considering for this EIS, as well as comments on the scope of the EA.

DATES: Written comments will be accepted through December 6, 1999.

See **SUPPLEMENTARY INFORMATION** for meeting times.

ADDRESSES: Written comments and requests to be included on a mailing list of persons interested in the EIS should be sent to Marilyn Luipold, Pacific Islands Area Office, NMFS, 1601 Kapiolani Blvd., Suite 1110, Honolulu, HI 96814–4700.

See **SUPPLEMENTARY INFORMATION** for meeting locations and special accommodations.

FOR FURTHER INFORMATION CONTACT: Marilyn Luipold, 808–973–2937 or 2935 extension 204.

SUPPLEMENTARY INFORMATION: Under the Magnuson-Stevens Fishery Conservation and Management Act, the United States has exclusive fishery management authority over all living marine resources within the EEZ between the seaward boundary of each state or U.S. island possession seaward to 200 nautical miles from the baseline used to measure the territorial sea. The management of these marine resources is vested in the Secretary of Commerce and in eight regional fishery management councils. The Western Pacific Fishery Management Council (Council) has the responsibility to prepare FMPs for the marine resources that require conservation and management in the Western Pacific Region. The National Environmental Policy Act (NEPA) requires preparation of EISs for major Federal actions significantly impacting the quality of the human environment (40 CFR 1502.9(a)).

The FMP was developed by the Council, and regulations implementing management measures were published on February 17, 1987 (52 FR 5983). An EA was prepared for the action implementing the FMP. The FMP has been amended seven times, and NEPA environmental documents (environmental assessments, categorical exclusions, findings of no significant impact, and an EIS) have been prepared for each FMP and regulatory amendment. However, many of these earlier documents have become outdated and/or focused on individual management actions, making it difficult to obtain a comprehensive view of issues and management options for the fishery as it exists today. NMFS is undertaking preparation of a comprehensive EIS in order to analyze the fishery as it is currently conducted, to address any and all impacts that might have been overlooked in earlier analyses, and to improve management of the fishery. The Federal action under review is defined as, among other things, all activities authorized and managed under the FMP, as amended.

The EIS will present an overall picture of the environmental effects of fishing as conducted under the FMP, rather than focusing narrowly on one management action, and will include a range of reasonable management alternatives and an analysis of their impacts in order to define issues and provide clear basis for choice among options by the public, the Council, and NMFS. NMFS intends to assess the biological and socio-economic impacts that result from regulation of the pelagic fisheries of the Western Pacific Region, including license limitation, as well as present and potential controls on effort, harvest levels, location, timing, and methods of fishing. The effects on associated species, including interactions with protected species, will be assessed. NMFS intends to evaluate the significant changes that have occurred in the pelagic fisheries, including the significant cumulative effects of changes in fishing activities, socio-economics, the environment, and management. The assessment will include analysis of the cumulative or incremental impacts of actions and alternatives. Impacts associated with status quo management (i.e., continuation of fishing as currently conducted) will be presented and compared to situations simulating limits on fishing areas and/or gears over all or parts of the management area. Possible alternatives to the current conduct of the fishery include a range of area and/or seasonal closures for the longline fishery, gear restrictions and/or modifications, including prohibitions on the use of longline gear in some or all of the management area, and adjustments to requirements for handling incidental hookings and takings of protected species. The impacts of EEZ fishing activity and harvest on the marine environment will be assessed under representative alternative management scenarios that will ensure consideration of impacts that may reach beyond the EEZ. As the number of possible alternatives is virtually infinite, the EIS will not consider detailed alternatives for every aspect of the FMP. Therefore, a principal objective of the scoping and public input process is to identify a reasonable set of management alternatives that, with adequate analysis, will sharply define critical

issues and provide a clear basis for choice among the alternatives.

Issues

The environmental consequences section of the EIS will display the impacts of pelagics harvest accruing with present management regulations and under a range of representative alternative management regulations on Western Pacific ecosystem issues. These issues include: essential fish habitat (EFH), target and non-target species of fish (including tunas, swordfish, and sharks), fish that are discarded, marine mammals (Hawaiian monk seals and cetaceans), sea turtles, and seabirds present in the Western Pacific ecosystem. In addition, the environmental consequences section will contain a summary, interpretation, and predictions for socio-economic issues associated with conduct of the fishery on the following groups of individuals: (1) Those who participate in harvesting the fishery resources and other living marine resources, (2) those who process and market the fish and fishery products, (3) those who are involved in allied support industries, (4) those who consume fishery products, (5) those who rely on living marine resources in the management area either for subsistence needs or for recreational benefits, (6) those who benefit from non-consumptive uses of living marine resources, (7) those involved in managing and monitoring fisheries, and (8) fishing communities.

EA Issues

In the EA, NMFS intends to evaluate whether the conduct of the current fisheries over the next 2 years will have significant environmental impacts. The Federal action under review in the EA is defined as all activities authorized and managed under the FMP, as amended, for the 2-year period anticipated to be necessary for preparation of the EIS. The EA will present an overall picture of the environmental effects over the next 2 years of fishing as conducted under the FMP. Efforts will be made to quantify and explain the intensity of projected impacts on EFH, target and non-target species of fish (including tunas, swordfish, and sharks), fish that are discarded, marine mammals. (Hawaiian monk seals and cetaceans), sea turtles, and seabirds present in the Western Pacific ecosystem. Additionally, the EA will evaluate socio-economic impacts associated with the fishery on groups of individuals, including fishing communities, harvesters, processors and marketers, consumers, subsistence and recreational users of living marine resources in the management area, non-consumptive users, and individuals involved in allied support industries and management and monitoring of the fisheries. Although the focus of the EA will be analysis of impacts associated with continuation of fishing as currently conducted, reasonable alternatives for application in the 2-year period, including area and/or seasonal closures for the longline fishery, gear restrictions and/or modifications including prohibitions on the use of longline gear in part or all of the management area, and adjustments to requirements for handling incidental hookings and takings of protected species, will be addressed.

Public Involvement and Meeting Times and Locations

Scoping for the EIS and EA begins with publication of this document. An informational presentation of the project will be made in conjunction with the Council's October meeting and will be at the Sheraton Waikiki Hotel, 2255 Kalakaua Ave., Honolulu, HI, October 19, 1999, at 6:30 p.m. Subsequent scoping meetings are planned during October and November for the Hawaii Islands of Oahu, Maui, Hawaii, and Kauai, and during November in Guam and the Northern Mariana Islands, and American Samoa. Specific times and locations will be announced in a separate **Federal Register** document. The Responsible Program Manager for this EIS is Rodney R. McInnis, Acting Southwest Regional Administrator, NMFS.

Special Accommodations

Requests for sign language interpretation or other auxiliary aids should be directed to Marilyn Luipold, (see **ADDRESSES**), 808–973–2937 (voice) or 808–973–2941) (fax), at least 5 days before the meeting date.

Authority: 16 U.S.C. 1801 *et. seq.*

Dated: October 1, 1999.

Gary C. Matlock,

Director, Office of Sustainable Fisheries, National Marine Fisheries Service.

[FR Doc. 99–25978 Filed 10–1–99; 4:29 pm]

BILLING CODE 3510–22–M

Notices

Federal Register

Vol. 64, No. 193

Wednesday, October 6, 1999

This section of the FEDERAL REGISTER contains documents other than rules or proposed rules that are applicable to the public. Notices of hearings and investigations, committee meetings, agency decisions and rulings, delegations of authority, filing of petitions and applications and agency statements of organization and functions are examples of documents appearing in this section.

DEPARTMENT OF COMMERCE

National Oceanic and Atmospheric Administration

ENVIRONMENTAL PROTECTION AGENCY

Coastal Nonpoint Pollution Control Program: Approval Decision on Maryland Coastal Nonpoint Pollution Control Program

AGENCIES: National Oceanic and Atmospheric Administration, U.S. Department of Commerce, and the U.S. Environmental Protection Agency.

ACTION: Notice of intent to approve the Maryland Coastal Nonpoint Program.

SUMMARY: Notice is hereby given of the intent to fully approve the Maryland Coastal Nonpoint Pollution Control Program (coastal nonpoint program) and of the availability of the draft Approval Decisions on conditions for the Maryland coastal nonpoint program. Section 6217 of the Coastal Zone Act Reauthorization Amendments (CZARA), 16 U.S.C. section 1455b, requires states and territories with coastal zone management programs that have received approval under section 306 of the Coastal Zone Management Act to develop and implement coastal nonpoint programs. Coastal states and territories were required to submit their coastal nonpoint programs to the National Oceanic and Atmospheric Administration (NOAA) and the U.S. Environmental Protection Agency (EPA) for approval in July 1995. NOAA and EPA conditionally approved the Maryland coastal nonpoint program on October 3, 1997. NOAA and EPA have drafted approval decisions describing how Maryland has satisfied the conditions placed on its program and therefore has a fully approved coastal nonpoint program.

NOAA and EPA are making the draft decisions for the Maryland coastal nonpoint program available for a 30-day public comment period. If no comments are received, the Maryland program will be approved. If comments are received, NOAA and EPA will consider whether such comments are significant enough to affect the decision to fully approve the program.

Copies of the draft Approval Decisions can be found on the NOAA website at http://www.nos.noaa.gov/ocrm/czm/ or may be obtained upon request from: Joseph P. Flanagan, Coastal Programs Division (N/ORM3), Office of Ocean and Coastal Resource Management, NOS, NOAA, 1305 East-West Highway, Silver Spring, Maryland 20910, tel. 301–713–3121, extension 201, e-mail joseph.flanagan@noaa.gov.

DATES: Individuals or organizations wishing to submit comments on the draft Approval Decisions should do so by November 5, 1999.

ADDRESSES: Comments should be made to Joseph A. Uravitch, Chief, Coastal Programs Division (N/ORM3), Office of Ocean and Coastal Resource Management, NOS, NOAS, 1305 East-West Highway, Silver Spring, Maryland, tel. 301–713–3155 extension 195, e-mail joseph.uravitch@noaa.gov or to Fred Suffian, EPA Region 3, 1650 Arch Street (3WP14), Philadelphia, PA, 19104, tel. 215–814–5753, e-mail suffian.fred@epa.gov.

FOR FURTHER INFORMATION CONTACT: Elisabeth Morgan, Coastal Programs Division (N/ORM3), Office of Ocean and Coastal Resource Management, NOS, NOAA, 1305 East-West Highway, Silver Spring, Maryland 20910, tel. 301–713–3109, extension 166, e-mail elisabeth.morgan@noaa.gov.

Federal Domestic Assistance Catalog 11.419 Coastal Zone Management Program Administration.

Dated: October 1, 1999.

Captain Ted I. Lillestolen,

Deputy Assistant Administrator for Ocean Services and Coastal Zone Management, National Oceanic and Atmospheric Administration.

J. Charles Fox,

Assistant Administrator, Office of Water, Environmental Protection Agency.

[FR Doc. 99–26060 Filed 10–5–99; 8:45 am]

BILLING CODE 3510–12–M

DEPARTMENT OF COMMERCE

National Oceanic and Atmospheric Administration

[Docket No. 990513129–9129–01]

RIN 0648–ZA65

NOAA Climate and Global Change Program, Program Announcement

AGENCY: Office of Global Programs, Office of Oceanic and Atmospheric Research, National Oceanic and Atmospheric Administration, Commerce.

ACTION: Amendments.

SUMMARY: This document amends a notice published in the **Federal Register** July 9,1999, regarding the NOAA Climate and Global Programs. The amendments are intended to change the dates for receiving Letters of Intent and Full proposals for the Program Element CLIVAR and for PACS/GCIP Warm Season Precipitation Initiative. All other dates remain the same.

DATES: PACS/GCIP Warm Season Precipitation Letters of Intent must be received no later than October 15, 1999, with full proposals postmarked on or before December 14, 1999. CLIVAR research projects Letters of Intent must be received no later than October 15, 1999. Full proposals must be postmarked on or before January 7, 2000.

ADDRESSES: Proposals may be sent to Office of Global Programs, National Oceanic and Atmospheric Administration, 1100 Wayne Avenue, Suite 1201, Silver Spring, MD 20910–5603.

FOR FURTHER INFORMATION CONTACT: Irma duPree at the above address or at phone: (301) 427–2089 ext 107, Internet: dupree@ogp.noaa.gov.

SUPPLEMENTARY INFORMATION: The Office of Global Programs published a notice describing the Program and funding area descriptions on July 9, 1999. (64 FR 37101.) The program description, evaluation criteria, selection process, background and requirements, as well as guidelines for applications are in that notice and are not repeated here.

Program Authority: 49 U.S.C. 44720(b); 33 U.S.C. 883d, 883e; 15 U.S.C. 2904; 15 U.S.C. 2931 et seq.; (CFDA No. 11.431)—CLIMATE AND ATMOSPHERIC RESEARCH.

Dated: September 30, 1999.

Louisa Koch,

Deputy Assistant Administrator.

[FR Doc. 99–25967 Filed 10–5–99; 8:45 am]

BILLING CODE 3510–KB–M

DEPARTMENT OF COMMERCE

National Oceanic and Atmospheric Administration

[I.D. 092899D]

New England Fishery Management Council; Public Meetings

AGENCY: National Marine Fisheries Service (NMFS), National Oceanic and Atmospheric Administration (NOAA), Commerce.

ACTION: Notice of public meeting.

SUMMARY: The New England Fishery Management Council (Council) is scheduling a public meeting of its Habitat Committee in October, 1999. Recommendations from the committee will be brought to the full Council for formal consideration and action, if appropriate.

DATES: The meeting will held on Tuesday, October 19, 1999, at 10 a.m.

ADDRESSES: The meeting will be held at the Holiday Inn, One Newbury St., Route 1, Peabody, MA; telephone: (978) 535–4600.

FOR FURTHER INFORMATION CONTACT: Paul J. Howard, Executive Director, New England Fishery Management Council; (781) 231–0422.

SUPPLEMENTARY INFORMATION: The committee will continue its discussion of objectives, criteria, and a process for designating a habitat research area. They also will discuss development of a structured process for the identification and designation of habitat areas of particular concern and review any available information related to potential scallop fishing access in Closed Area I and the Nantucket Lightship Area. There will be a brief closed session during the meeting to select industry advisors.

Although non-emergency issues not contained in this agenda may come before this Council for discussion, in accordance with the Magnuson-Stevens Fishery Conservation and Management Act, those issues may not be the subject of formal Council action during this meeting. Council action will be restricted to those issues specifically listed in this notice and any issues arising after publication of this notice that require emergency action under section 305(c) of the Magnuson-Stevens Act, provided the public has been notified of the Council's intent to take final action to address the emergency.

Special Accommodations

This meeting is physically accessible to people with disabilities. Requests for sign language interpretation or other auxiliary aids should be directed to Paul J. Howard (see **ADDRESSES**) at least 5 days prior to the meeting dates.

Dated: September 30, 1999.

Bruce C. Morehead,

Acting Director, Office of Sustainable Fisheries, National Marine Fisheries Service.

[FR Doc. 99–26092 Filed 10–5–99; 8:45 am]

BILLING CODE 3510–22–F

DEPARTMENT OF COMMERCE

National Oceanic and Atmospheric Administration

[I.D. 090199A]

Marine Mammals; File No. 738–1454–02

AGENCY: National Marine Fisheries Service (NMFS), National Oceanic and Atmospheric Administration (NOAA), Commerce.

ACTION: Issuance of permit amendment.

SUMMARY: Notice is hereby given that Permit No. 738–1454 issued to Ms. Carole Conway, Genomic Variation Laboratory, Department of Animal Science, Meyer Hall, University of California, Davis, CA 95616–3322, was amended to allow import and export of additional blue whale samples.

ADDRESSES: The amendment and related documents are available for review upon written request or by appointment in the following offices:

Permits and Documentation Division, Office of Protected Resources, NMFS, 1315 East-West Highway, Room 13130 Silver Spring, MD 20910 (301/713–2289); and

Regional Administrator, Southwest Region, NMFS, 501 West Ocean Blvd., Suite 4200, Long Beach, CA 90802–4213 (562/980–4001).

FOR FURTHER INFORMATION CONTACT: Ruth Johnson (301/713–2289).

SUPPLEMENTARY INFORMATION: The subject amendment has been issued under the authority of the Marine Mammal Protection Act of 1972, as amended (16 U.S.C. 1361 *et seq.*), the Regulations Governing the Taking and Importing of Marine Mammals (50 CFR part 216), the Endangered Species Act of 1973, as amended (ESA; 16 U.S.C. 1531 *et seq.*), and the regulations governing endangered and threatened marine species(50 CFR 222–226).

Issuance of this permit, as required by the ESA, was based on a finding that such permit (1) was applied for in good faith, (2) will not operate to the disadvantage of the endangered species which is the subject of this permit, and (3) is consistent with the purposes and policies set forth in section 2 of the ESA.

Dated: September 29, 1999.

Ann D. Terbush,

Chief, Permits and Documentation Division, Office of Protected Resources, National Marine Fisheries Service.

[FR Doc. 99–26091 Filed 10–5–99; 8:45 am]

BILLING CODE 3510–22–F

DEPARTMENT OF COMMERCE

National Oceanic and Atmospheric Administration

[I.D. 051299C]

Marine Mammals; Gray Whale Research and Monitoring

AGENCY: National Marine Fisheries Service (NMFS), National Oceanic and Atmospheric Administration (NOAA), Commerce.

ACTION: Notice of report availability.

SUMMARY: NMFS conducted a review of the status of the Eastern North Pacific stock of gray whales (*Eschrichtius robustus*), sometimes referred to as the ''California'' stock, at a workshop held by the National Marine Mammal Laboratory (NMML) in Seattle, Washington, on March 16–17, 1999. Based on the continued growth of this population (rising at 2.5 percent annually; currently at an estimated 26,600 individuals), and the lack of evidence of any imminent threats to the stock, workshop participants agreed to continue this stock's classification as non-threatened. They also concluded that abundance monitoring should continue at some level and that, ideally, research should continue on human impacts to critical habitats. This stock's annual migrations along the highly populated coastline of the western United States and their concentration in limited winter and summer areas may make them particularly vulnerable to impacts from commercial or industrial development or local catastrophic events. The Western North Pacific (''Korean'') gray whale stock has not recovered and should continue to be listed as endangered.

This workshop and status review conclude the 5-year assessment of the Eastern North Pacific gray whale stock following its June 16, 1994, removal from the List of Endangered and Threatened Wildlife and Plants (List). Since completion of the status review,

the increased gray whale stranding rate has continued. NMFS is currently investigating these mortalities independent of the already concluded status review process and will issue a report in 2000.

ADDRESSES: A copy of the Status Review is available by writing to Donna Wieting, Acting Chief, Marine Mammal Conservation Division, Office of Protected Resources, NMFS, 1315 East-West Hwy, Silver Spring MD 20910–3282 or by telephoning the individual listed (see FOR FURTHER INFORMATION CONTACT).

FOR FURTHER INFORMATION CONTACT: Kenneth R. Hollingshead, NMFS, 301–713–2055.

SUPPLEMENTARY INFORMATION: Under the Marine Mammal Protection Act (16 U.S.C. 1361 *et seq.*; the MMPA), NMFS has jurisdiction over most marine mammal species, including whales. Under section 4(a) of the Endangered Species Act (16 U.S.C. 1531 *et seq.*; the ESA) and 50 CFR part 424, NMFS makes determinations as to whether a species should be listed as endangered or threatened, or whether it should be reclassified or removed from the List. Accordingly, NMFS has conducted comprehensive evaluations of the status of the Eastern North Pacific gray whale stock. The first review was conducted in 1984, followed by another review in 1990 (56 FR 29471, June 27, 1991). These evaluations were conducted in terms of factors contained in section 4(a)(1) of the ESA for listing and delisting actions. The best available abundance estimate (21,296; CV = 6.05%; 95% CI = 18,900 to 24,000) and average annual rate of increase (3.29%; SE = 0.44%) indicated that this stock no longer met the standards for classification as an endangered species. An extensive public comment period was provided (56 FR 58869, November 22, 1991). On 7 January 1993 (58 FR 3121), NMFS published a final notice of determination that this whale stock had recovered to near its estimated pre-exploitation population size. Although individual and cumulative impacts might have the potential to adversely affect these whales, it was determined that this stock was neither in danger of extinction throughout all or a significant portion of its range, nor was it likely to again become endangered within the foreseeable future. NMFS determined, therefore, that the Eastern North Pacific stock of gray whales should no longer be considered endangered. On June 3, 1994, NMFS announced the availability of a draft plan (A 5-year Plan for Research and Monitoring of the Eastern North Pacific Population of Gray Whales) to review and comment on the research pertinent to this decision to delist gray whales, as required under section 4(g) of the ESA. Effective June 16, 1994 (59 FR 31094), as a result of NMFS' determination, the U.S. Fish and Wildlife Service (USFWS) removed this whale stock from the List under the ESA. Concurrent with that action, NMFS amended the list of endangered species under its jurisdiction (50 CFR part 222), removing the Eastern North Pacific gray whale stock. Abundance and trends in the population's growth were sufficient to allow this stock to be removed from the List without going through an interim consideration period as a threatened stock.

Changes to the listing of the Eastern North Pacific gray whale stock did not affect the fact that the Western North Pacific (''Korean'') gray whale stock has not recovered and should continue to be considered endangered.

A workshop was convened by NMFS at NMML in Seattle, Washington, on March 16–17, 1999, to review the status of the Eastern North Pacific stock of gray whales based on research conducted during the 5-year period following the delisting of this stock. The workshop followed guidelines outlined in the NMFS 5-year Plan to conduct the status review and recommend whether to (1) continue the monitoring program for an additional 5-year period; (2) terminate the monitoring program; or (3) consider changing the status of the gray whale under the ESA. The 28 invited participants determined that this stock was neither in danger of extinction, nor was it likely to again become endangered within the foreseeable future, according to the determining factors listed in section 4(a)(1) of the ESA. Therefore, there was no apparent reason to reverse the previous decision to delist this stock from the List. There was a consensus among participants that this stock of gray whales should continue to be monitored for an additional 5-year period (1999–2004).

Canada's Committee on the Status of Endangered Wildlife in Canada lists the ''Northeast Pacific population'' of gray whale as ''not at risk.'' This is the lowest category for animals in their classification system, which also includes vulnerable, threatened, endangered, extirpated, and extinct.

Although the Eastern North Pacific stock of gray whales no longer receives protection under the ESA, it continues to be protected under the MMPA, and subsistence take is managed under quotas set by the International Whaling Commission. The delisting of this stock does not in any way alter the status of the still endangered Western North Pacific (''Korean'') stock of gray whales. There is no allowable commercial take of any gray whales, and the Convention on the International Trade in Endangered Species regulates the transportation of animal parts. Furthermore, if there is evidence of a significant negative decline and research indicates that such a change would be warranted, this stock can be proposed to be listed again as threatened or endangered under the ESA.

This review concludes the 5-year status review required by section 4(g)(1) of the ESA, that commenced on June 16, 1994 (59 FR 31094), when the USFWS removed this whale stock from the List.

Dated: September 29, 1999.

Art Jeffers,

Deputy Director, Office of Protected Resources, National Marine Fisheries Service.

[FR Doc. 99–25925 Filed 10–5–99; 8:45 am]

BILLING CODE 3510–22–F

CONSUMER PRODUCT SAFETY COMMISSION

Proposed Collection; Comment Request—Collection of Information for Children's Sleepwear

AGENCY: Consumer Product Safety Commission.

ACTION: Notice.

SUMMARY: As required by the Paperwork Reduction Act of 1995 (44 U.S.C. Chapter 35), the Consumer Product Safety Commission (CPSC) requests comments on a proposed extension of approval, for a period of three years from the date of approval by the Office of Management and Budget (OMB), of a collection of information from manufacturers and importers of children's sleepwear. This collection of information is in the Standard for the Flammability of Children's Sleepwear: Sizes 0 through 6X and the Standard for the Flammability of Children's Sleepwear: Sizes 7 through 14 and regulations implementing those standards. See 16 CFR Parts 1615 and 1616. The children's sleepwear standards and implementing regulations establish requirements for testing and recordkeeping by manufacturers and importers of children's sleepwear.

The Commission will consider all comments received in response to this notice before requesting an extension of approval of this collection of information from OMB.

DATES: The Office of the Secretary must receive written comments not later than December 6, 1999.

ADDRESSES: Written comments should be captioned ''Children's Sleepwear, Collection of Information'' and mailed to the Office of the Secretary, Consumer Product Safety Commission, Washington, D.C. 20207, or delivered to that office, room 502, 4330 East-West Highway, Bethesda, Maryland 20814. Written comments may also be sent to the Office of the Secretary by facsimile at (301) 504–0127 or by e-mail at cpsc-os@cpsc.gov.

FOR FURTHER INFORMATION CONTACT: For information about the proposed extension of approval of the collection of information, or to obtain a copy of 16 CFR Parts 1615 and 1616, call or write Linda L. Glatz, Office of Planning and Evaluation, Consumer Product Safety Commission, Washington, D.C. 20207; telephone (301) 504–0416, extension 2226.

SUPPLEMENTARY INFORMATION:

A. The Standards

Children's sleepwear in sizes 0 through 6X manufactured for sale in or imported into the United States is subject to the Standard for the Flammability of Children's Sleepwear: Sizes 0 through 6X (16 CFR Part 1615). Children's sleepwear in sizes 7 through 14 is subject to the Standard for the Flammability of Children's Sleepwear: Sizes 7 through 14 (16 CFR Part 1616). The children's sleepwear flammability standards require that fabrics, seams, and trim used in children's sleepwear in sizes 0 through 14 must self-extinguish when exposed to a small open-flame ignition source. The children's sleepwear standards and implementing regulations also require manufacturers and importers of children's sleepwear in sizes 0 through 14 to perform testing of products and to maintain records of the results of that testing. 16 CFR Part 1615, Subpart B; 16 CFR Part 1616; Subpart B. The Commission uses the information compiled and maintained by manufacturers and importers of children's sleepwear to help protect the public from risks of death or burn injuries associated with children's sleepwear. More specifically, the Commission reviews this information to determine whether the products produced and imported by the firms comply with the applicable standard. Additionally, the Commission uses this information to arrange corrective actions if items of children's sleepwear fail to comply with the applicable standard in a manner that creates a substantial risk of injury to the public.

OMB approved the collection of information in the children's sleepwear standards and implementing regulations under control number 3041–0027. OMB's most recent extension of approval will expire on December 31, 1999. The Commission proposes to request an extension of approval without change for the collection of information in the children's sleepwear standards and implementing regulations.

B. Estimated Burden

The Commission staff estimates that about 63 firms manufacture or import products subject to the two children's sleepwear flammability standards. The Commission staff estimates that these standards and implementing regulations will impose an average annual burden of about 1,650 hours on each of those firms. That burden will result from conducting the testing required by the standards and maintaining records of the results of that testing required by the implementing regulations. The total annual burden imposed by the standards and regulations on all manufacturers and importers of children's sleepwear will be about 103,950 hours. The hourly wage for the testing and recordkeeping required by the standards and regulations is about $30, for an annual cost to the industry of about $3,118,500.

The Commission will expend approximately three months of professional staff time and travel costs annually for reviewing and evaluating the records maintained by manufacturers and importers of children's sleepwear subject to the standards. The annual cost to the Federal government of the collection of information in the sleepwear standards and implementing regulations is estimated to be $17,000.

C. Request for Comments

The Commission solicits written comments from all interested persons about the proposed collection of information. The Commission specifically solicits information relevant to the following topics:

—Whether the collection of information described above is necessary for the proper performance of the Commission's functions, including whether the information would have practical utility;
—Whether the estimated burden of the proposed collection of information is accurate;
—Whether the quality, utility, and clarity of the information to be collected could be enhanced; and
—Whether the burden imposed by the collection of information could be minimized by use of automated, electronic or other technological collection techniques, or other forms of information technology.

Dated: September 29, 1999.

Sadye E. Dunn,

Secretary, Consumer Product Safety Commission.

[FR Doc. 99–25893 Filed 10–5–99; 8:45 am]

BILLING CODE 6355–01–U

DEPARTMENT OF DEFENSE

Office of the Secretary

U.S. Strategic Command Strategic Advisory Group

AGENCY: Department of Defense, USSTRATCOM.

ACTION: Notice.

SUMMARY: The Strategic Advisory Group (SAG) will meet in closed session on October 21 and 22, 1999. The mission of the SAG is to provide timely advice on scientific, technical, and policy-related issues to the Commander in Chief, U.S. Strategic Command, during the development of the nation's strategic war plans. At this meeting, the SAG will discuss strategic issues that relate to the development of the Single Integrated Operational Plan (SIOP). Full development of the topics will require discussion of information classified TOP SECRET in accordance with Executive Order 12958, April 17, 1995. Access to this information must be strictly limited to personnel having requisite security clearances and specific need-to know. Unauthorized disclosure of the information to be discussed at the SAG meeting could have exceptionally grave impact upon national defense.

In accordance with section 10(d) of the Federal Advisory Committee Act, (5 U.S.C. App. 2), it has been determined that this SAG meeting concerns matters listed in 5 USC 552b(c) and that, accordingly, this meeting will be closed to the public.

Dated: September 30, 1999.

L.M. Bynum,

Alternate OSD Federal Register Liaison Officer, DoD.

[FR Doc 99–25971 Filed 10–5–99; 8:45 am]

BILLING CODE 5001–10–M

DEPARTMENT OF DEFENSE

Department of the Navy

Correction to Notice of Availability of Government-Owned Invention for Licensing

AGENCY: Department of the Navy, DOD.

ACTION: Announcement of correction.

SUMMARY: The Department of the Navy published in the **Federal Register**, September 22, 1999 (Volume 64, Number 183) Notice of Availability of Government-Owned Invention for Licensing. The invention U.S. Patent Number 5,652,713 entitled *Discriminate Reduction Data Processing* is assigned to the United States Government as represented by the Secretary of the Navy and is available for licensing by the Department of the Navy. This announcement corrects the invention patent number.

ADDRESSES: Requests for copies of the patent cited should be directed to Naval Surface Warfare Center, Carderock Division, Code 0117, 9500 MacArthur Blvd, West Bethesda, MD 20817–5700.

FOR FURTHER INFORMATION CONTACT: Mr. Dick Bloomquist, Director, Technology Transfer, Naval Surface Warfare Center, Carderock Division, Code 0117, 9500 MacArthur Blvd., West Bethesda, MD 20817–5700, telephone (301) 227–4299.

Dated: September 28, 1999.

J.L. Roth,

Lieutenant Commander, Judge Advocate General's Corps, U.S. Navy, Federal Register Liaison Officer.

[FR Doc. 99–25924 Filed 10–5–99; 8:45 am]

BILLING CODE 3810–FF–P

DEPARTMENT OF EDUCATION

[CFDA No. 84.116N]

Fund for the Improvement of Postsecondary Education—Special Focus Competition (Invitational Priority: Institutional Cooperation and Student Mobility in Postsecondary Education Among the United States, Canada and Mexico); Notice Inviting Application for New Awards for Fiscal Year (FY) 2000

Purpose of Program: To provide grants or enter into cooperative agreements to improve postsecondary education opportunities by focusing on problem areas or improvement approaches in postsecondary education.

Eligible Applicants: Institutions of higher education or combinations of institutions and other public and private nonprofit educational institutions and agencies.

Deadline for Transmittal of Applications: November 19, 1999.

Deadline for Intergovernmental Review: January 19, 2000.

Applications Available: October 6, 1999.

Available Funds: $250,000 for FY 2000. The estimated amount of funds available for awards is based on the Administration's request for this program for FY 2000. The actual level of funding, if any, is contingent upon final congressional action.

Estimated Range of Awards: $20,000–25,000 for FY 2000. $185,000–$205,000 for four-year duration of grant.

Estimated Average Size of Awards: $25,000 for FY 2000. $200,000 for four-year duration of grant.

Estimated Number of Awards: 10.

Note: The Department is not bound by any estimates in this notice.

Project Period: Up to 48 months.

Applicable Regulations: The Education Department General Administrative Regulations (EDGAR) in 34 CFR Parts 74, 75, 77, 79, 80, 82, 85, 86, 97, 98, and 99.

SUPPLEMENTARY INFORMATION: This program is a Special Focus Competition to support projects addressing a particular problem area or improvement approach in postsecondary education. The competition also includes an invitational priority to encourage proposals designed to support the formation of educational consortia of American, Canadian and Mexican institutions to encourage cooperation in the coordination of curricula, the exchange of students and the opening of educational opportunities throughout North America. The invitational priority is issued in cooperation with Canada and Mexico. Canadian and Mexican institutions participating in any consortium proposal responding to the invitational priority may apply, respectively, to Human Resources Development Canada and the Mexican Department of Public Education for additional funding under separate Canadian and Mexican competitions.

Priority

Invitational Priority

The Secretary is particularly interested in applications that meet the following invitational priority. However, an application that meets this invitational priority does not receive competitive or absolute preference over other applications (34 CFR 75.105(c)(1)).

Invitational Priority: Projects that support consortia of institutions of higher education that promote institutional cooperation and student mobility among the United States, Canada, and Mexico.

Methods for Applying Selection Criteria

The Secretary gives equal weight to the listed criteria. Within each of the criteria, the Secretary gives equal weight to each of the factors.

Selection Criteria

In evaluating applications for grants under this program competition, the Secretary uses the following selection criteria chosen from those listed in 34 CFR 75.210.

(1) The significance of the proposed project, as determined by—

(a) The extent to which the proposed project involves the development or demonstration of promising new strategies that build on, or are alternatives to, existing strategies;

(b) The likely utility of the products (such as information, materials, processes, or techniques) that will result from the proposed project, including the potential for their being used in a variety of other settings; and

(c) The importance or magnitude of the results or outcomes likely to be attained by the proposed project, especially improvements in teaching and student achievement.

(2) The quality of the design of the proposed project, as determined by—

(a) The extent to which the goals, objectives, and outcomes to be achieved by the proposed project are clearly specified and measurable; and

(b) The extent to which the design of the proposed project is appropriate to, and will successfully address, the needs of the target population or other identified needs.

(3) The adequacy of resources, as determined by—

(a) The extent to which the costs are reasonable in relation to the objectives, design, and potential significance of the proposed project;

(b) The potential for continued support of the project after FIPSE/HDRC/SEP funding ends, including, as appropriate, the demonstrated commitment of appropriate entities to such support; and

(c) The relevance and demonstrated commitment of each partner in the proposed project to the implementation and success of the project.

(4) The quality of the project personnel, as determined by—

(a) the qualifications, including training and experience, of key project personnel; and

(b) the extent to which the applicant encourages applications for employment from persons who are members that have traditionally been under-represented based on race, color, national origin, gender, age, or disability.

For Applications or Information Contact: Fund for the Improvement of Postsecondary Education (FIPSE), U.S. Department of Education, 7th & D Streets, SW., Room 3100, ROB–3,

Washington, DC 20202–5175. You may also request application forms by calling 732–544–2504 (fax on demand), or application guidelines by calling 202–358–3041 (voice mail) or submitting the name of the competition and your name and postal address to FIPSE@ED.GOV (e-mail). Applications are also listed on the FIPSE Web Site <http://www.ed.gov/offices/OPE/FIPSE>. Individuals who use a telecommunications device for the deaf (TDD) may call the Federal Information Relay Service (FIRS) at 1–800–877–8339 between 8 a.m. and 8 p.m., Eastern time, Monday through Friday. For additional program information call Cindy Fisher at the FIPSE office (202–708–5750) between the hours of 8 a.m. and 5 p.m., Eastern time, Monday through Friday.

Individuals with disabilities may obtain this document in an alternate format (*e.g.*, Braille, large print, audiotape, or computer diskette) on request to the contact person listed in the preceding paragraph.

Individuals with disabilities also may obtain a copy of the application package in an alternate format by contacting that person. However, the Department is not able to reproduce in an alternate format the standard forms included in the application package.

Electronic Access to This Document

You may view this document, as well as all other Department of Education documents published in the **Federal Register**, in text or Adobe Portable Document Format (pdf) on the Internet at either of the following sites:

http://ocfo.ed.gov/fedreg.htm

http://www.ed.gov/news.html

To use the PDF you must have the Adobe Acrobat Reader Program with Search, which is available free at either of the previous sites. If you have questions about using the PDF, call the U.S. Government Printing Office (GPO) toll free at 1–888–293–6498; or in the Washington DC, area at (202) 512–1530.

Note: The official version of this document is the document published in the **Federal Register**. Free Internet access to the official edition of the **Federal Register** and the Code of Federal Regulations is available on GPO Access at http://www.access.gpo.gov/nara/index.html

Program Authority: 20 U.S.C. 1138–1138d.

Dated: October 1, 1999.

Claudio Prieto,

Acting Assistant Secretary for Postsecondary Education.

[FR Doc. 99–26093 Filed 10–5–99; 8:45 am]

BILLING CODE 4001–01–P

DEPARTMENT OF EDUCATION

Office of Special Education and Rehabilitative Services; Office of Special Education Programs; Notice Inviting Applications for New Awards for Fiscal Year (FY) 2000

AGENCY: Department of Education.

ACTION: Correction notice.

SUMMARY: On August 30, 1999, a notice inviting applications for new awards under the Office of Special Education and Rehabilitative Services; Grant Applications under Part D, Subpart 2 of the Individuals with Disabilities Education Act Amendments of 1997 was published in the **Federal Register** (64 FR 47310). The notice contained a ''chart'' that provided closing dates and other information regarding the transmittal of applications for the FY 2000 competitions. The chart inadvertently listed ''November 13, 2000'' as the intergovernmental review deadline date for one competition. This notice provides a correction to the chart on page 47328 of that notice by changing the intergovernmental review deadline date to April 4, 2000 for the Student Initiated Research Projects (84.324B) competition.

FOR FURTHER INFORMATION CONTACT: For further information on this notice contact Debra Sturdivant, U.S. Department of Education, 400 Maryland Avenue, SW, room 3527, Switzer Building, Washington, DC 20202–2641. FAX: (202) 205–8717 (FAX is the preferred method for requesting information). Telephone: (202) 205–8038. Internet: Debra__Sturdivant@ed.gov.

Individuals who use a telecommunications device for the deaf (TDD) may call the Federal Relay Service at 1–800–877–8339.

Individuals with disabilities may obtain a copy of this notice in an alternate format (*e.g.*, Braille, large print, audiotape, or computer diskette) by calling (202) 205–8113.

Electronic Access to This Document

You may view this document, as well as all other Department of Education documents published in the **Federal Register**, in text or portable document format (PDF) on the Internet at either of the following sites:

http://ocfo.ed.gov/fedreg.htm
http://www.ed.gov/news.html

To use the PDF you must have the Adobe Acrobat Reader Program with Search, which is available free at either of the previous sites. If you have questions about using the PDF, call the U.S. Government Printing Office (GPO), toll free at 1–888–293–6498; or in the Washington, DC, area at (202) 512–1530.

Note: The official version of a document is the document published in the **Federal Register** Free Internet access to the official edition of the **Federal Register** and the Code of Federal Regulations is available on GPO Access at: http://www.access.gpo/nara/index.html.

Dated: September 30, 1999.

Judith E. Heumann,

Assistant Secretary for Special Education and Rehabilitative Services.

[FR Doc. 99–25905 Filed 10–5–99; 8:45 am]

BILLING CODE 4000–01–M

DEPARTMENT OF ENERGY

National Study on Long-Term Stewardship Activities and Issues

AGENCY: Department of Energy (DOE).

ACTION: Notice of intent to prepare a study on long-term stewardship.

SUMMARY: The Department of Energy (DOE) is preparing a national study on long-term stewardship to examine the institutional and programmatic issues facing DOE as it completes the environmental cleanup program at its sites. The study, which will incorporate input from the public, is being prepared to comply with the terms of a settlement agreement that resolved a lawsuit brought against DOE by the Natural Resources Defense Council and other plaintiffs. DOE invites the general public, other Federal agencies, Native American Tribes, state and local governments, and all other interested parties to comment on the scope of the study.

DATES: The scoping period will extend to January 4, 2000.

ADDRESSES: Comments may be submitted in writing to: Steven Livingstone, Project Manager, U.S. Department of Energy, PO Box 45079, Washington, DC 20026–5079; Or electronically at *www.em.doe.gov/lts* or to *Steven.Livingstone@em.doe.gov;* Or by fax at 202–586–4314.

FOR FURTHER INFORMATION CONTACT: James D. Werner, Program Director, or Steven Livingstone, Project Manager, Office of Strategic Planning and Analysis (EM–24), Office of Environmental Management, U.S. Department of Energy, 1000 Independence Avenue, SW, Washington, DC 20585–0119, phone: 202–586–9280, fax: 202–586–4314.

SUPPLEMENTARY INFORMATION: DOE is preparing a national study on the possible consequences of long-term stewardship according to the terms of a

settlement agreement that resolved a lawsuit brought against DOE by the Natural Resources Defense Council and 38 other plaintiffs (*Natural Resources Defense Council, et al.* v. *Richardson, et al.*, Civ. No. 97–936 (SS) (D.D.C. Dec. 12, 1998)). The study, which will incorporate input from the public, will examine the institutional and programmatic issues facing DOE as it completes the environmental cleanup program at its sites. The settlement agreement states that, ''in the study, DOE will discuss, as appropriate, alternative approaches to long-term stewardship and the environmental consequences associated with those alternative approaches.'' Long-term stewardship, under the agreement, refers to:

> the physical controls, institutions, information and other mechanisms needed to ensure protection of people and the environment at sites where DOE has completed or plans to complete ''cleanup'' (e.g., landfill closures, remedial actions, removal actions, and facility stabilization). This concept of long-term stewardship includes, *inter alia*, land-use controls, monitoring, maintenance, and information management.

Goals

The goal of the study on long-term stewardship is to inform decision-makers and the public about the long-term stewardship issues and challenges facing DOE, and the potential options for addressing these issues.

The study will:

- Describe DOE's long-term stewardship responsibilities, the status of current and ongoing stewardship obligations, activities and initiatives, and the plans for future activities.
- Analyze the national issues that DOE needs to address in planning for and conducting long-term stewardship activities.
- Promote information exchange on long-term stewardship among DOE, Tribal nations, state and local governments, and private citizens.

The study is not intended to:

- Be a National Environmental Policy Act (NEPA) document or its functional equivalent.
- Identify or address site-specific issues, except as examples in the context of presenting national issues.
- Address issues specific to nuclear stockpile stewardship, other activities related to national security, or the Central Internet Database required by the settlement agreement.

Long-Term Stewardship Study Development Process

According to the terms of the settlement agreement, DOE will follow the President's Council on Environmental Quality (CEQ) procedures for public scoping, 40 CFR 1501.7(a)(1)–(2), even though this study will not be a NEPA document or its functional equivalent. This process will provide DOE with input about the topics and issues that should be included in the study, within the general parameters established by the settlement agreement. Scoping includes opportunities for interested parties to learn about the goals of the study, comment on what issues or topics the study should consider, and discuss key elements of the study with DOE staff. DOE will consider all relevant comments and suggestions in developing the scope of the study. Once the scoping process is completed, DOE will make publicly available a summary document describing how comments were considered. To ensure consideration in the preparation of the study, scoping comments should be transmitted or postmarked by the date indicated at the beginning of this Notice. Comments submitted after that date will be considered to the extent practicable. DOE encourages the public to submit comments through an Internet Web Site (*www.em.doe.gov/lts*), as this will provide an opportunity for commentors to track the progress of their comments on the Web Site. All comments received will be made available for review on the Web Site.

DOE is conducting a public scoping workshop from 8:30 a.m.–11:30 a.m., October 28, 1999 at the Oak Ridge Mall, Community Room, 333 Main Street, Oak Ridge, Tennessee, 37830 to provide an opportunity for information exchange and constructive discussions between DOE and interested parties on the types of issues DOE should examine in the long-term stewardship study. This workshop is scheduled to coincide with a related meeting on October 26–27, 1999 for site-specific advisory boards focusing on long-term stewardship. At this workshop, DOE staff will discuss the objectives of the study and the study process, describe how public input will be incorporated into the study, and address questions. The facilitated workshop will provide for interaction among participants so as to promote full and open discussion. Any member of the public desiring further information concerning the workshop on the long-term stewardship study can contact James D. Werner or Steven Livingstone at the address and phone numbers provided above.

In addition to this workshop, DOE is pursuing opportunities to inform the public about the study and the scoping process. These will include using existing forums and entities, such as the Environmental Management Advisory Board, Site-Specific Advisory Boards, and State and Tribal Governments Working Group, and other stakeholder organizations examining issues which relate to issues to be examined in the study.

Based on the results of the scoping process, DOE will prepare a draft study that will be released for public comment. We anticipate issuing a draft study in Spring 2000. The public review process for the study will meet certain DOE requirements for public review, 10 CFR 1021.313, made applicable under the terms of the settlement agreement. This process is intended to allow public comment on the draft study that DOE will use to complete the final study. DOE will issue a Notice of Availability describing the public review process for the draft study. A public comment period will extend for no less than 45 days after publication of the draft study. DOE will prepare a final study, including a comment response summary document, for release to the public.

Background

In the last decade, DOE has made significant progress in its cleanup program to reduce risks and ''mortgage'' costs for maintaining safe conditions at its sites. DOE's experience in planning and completing cleanups has demonstrated that cleanup to levels acceptable for unrestricted use will not be accomplished at many sites.[1] Residual contamination, buried waste, and other hazards may remain at sites after cleanup is completed for several reasons:

- Technical and Economic Limitations—There are a number of situations where no acceptable remediation strategy exists because of the type of contaminant and/or its location. Even when current remediation technologies can restore sites and facilities to conditions suitable for unrestricted use, the cost of doing so may be prohibitive.
- Worker Health and Collateral Ecological Impacts—In determining the remediation approach for particular sites, it is necessary to balance the short-term risk to workers with the potential longer-term risk to the general public and the environment. In addition, there are situations where remedial actions would result in significantly greater

[1] Estimating the Cold War Mortgage: The 1995 Baseline Environmental Management Report (Volumes 1 & 2), March 1995, DOE/EM–0232. The 1996 Baseline Environmental Management Report (Volumes 1, 2, & 3), June 1996, DOE/EM–0290. Accelerating Cleanup: Paths to Closure, June 1998, DOE/EM–0362.

ecological damage than if the contaminated site was left undisturbed.

Whenever site cleanup does not result in the site's release for unrestricted use, DOE anticipates that long-term stewardship will be necessary.

Related Information

DOE is developing a background document, From Cleanup to Stewardship, A Companion Report to 'Paths to Closure' and Background Information to Support the Scoping Process Required for the 1999 PEIS Settlement Study that provides the best available information on DOE's long-term stewardship obligations, activities, and related issues. This background document may assist persons interested in submitting scoping comments by providing a basis for more informed discussion of stewardship needs, and the potential links between existing and future cleanup decisions (such as risks, costs, technologies, and future land use) and the level of effort required to conduct long-term stewardship activities. The primary source of information and assumptions about DOE sites is the data set used to develop the 1998 Accelerating Cleanup: Paths to Closure report. DOE is using this information to identify sites where contaminated facilities, water, soil, and/or engineered units would likely remain after cleanup is complete, and to estimate the scope of long-term stewardship activities needed. The background document is anticipated to be available this month. When available, copies of the background document or other related information can be obtained by contacting:

- The Internet Web Site at www.em.doe.gov/lts, which contains information on long-term stewardship related issues produced by DOE and outside sources.
- The Center for Environmental Management Information, 955 L'Enfant Plaza, North, SW, Suite 8200, Washington, DC 20024, 1–800–736–3282 (''1–800–7EM–DATA''), in DC, 202–863–5084.
- DOE Reading Rooms (for locations of the DOE Reading Rooms or other public information repositories containing background information, please contact the Center for Environmental Management Information at the above address and telephone).

Signed in Washington DC, this 30th day of September, 1999.

James D. Werner,

Director, Office of Strategic Planning and Analysis, Office of Environmental Management.

[FR Doc. 99–26030 Filed 10–5–99; 8:45 am]

BILLING CODE 6450–01–P

DEPARTMENT OF ENERGY

Office of Science; Basic Energy Sciences Advisory Committee, Meeting

AGENCY: Department of Energy.

ACTION: Notice of open meeting.

SUMMARY: This notices announces a meeting of the Basic Energy Sciences Advisory Committee (BESAC). Federal Advisory Committee Act (Pub. L. 92–463, 86 Stat. 770) requires that public notice of these meetings be announced in the **Federal Register**.

DATES: Wednedsay, November 3, 1999, 8:30 a.m. to 5:30 p.m.; Thursday, November 4, 1999, 8:30 a.m. to 12 p.m.

ADDRESSES: Gaithersburg Washingtonian Marriott Center, 9751 Washingtonian Boulevard, Gaithersburg, MD 20878.

FOR FURTHER INFORMATION CONTACT: Sharon Long; Office of Basic Energy Sciences; U. S. Department of Energy; 19901 Germantown Road; Germantown, MD 20874–1290; Telephone: (301) 903–5565.

SUPPLEMENTARY INFORMATION:

Purpose of the Meeting: The purpose of this meeting is to provide advice and guidance with respect to the basic energy sciences research program.

Tentative Agenda: Agenda will include discussions of the following:

Wednesday, November 3, 1999

- Welcome and Introduction
- Remarks from Dr. Martha Krebs, Director, Office of Science
- News from Basic Energy Sciences
- Discussion on implementing a research program in Complex Systems
- Brief overviews of the programs in BES

Thursday, November 4, 1999

- Review of the 1999–2000 charge to BESAC and updates of ongoing activities
- Overview of the Intense Pulsed Neutron Source at Argonne National Laboratory
- Overview of the Manuel Lujan, Jr. Neutron Scattering Center at Los Alamos National Laboratory

Public Participation: The meeting is open to the public. If you would like to file a written statement with the Committee, you may do so either before or after the meeting. If you would like to make oral statements regarding any of the items on the agenda, you should contact Sharon Long at 301–903–6594 (fax) or *sharon.long@science.doe.gov* (e-mail). You must make your request for an oral statement at least 5 business days prior to the meeting. Reasonable provision will be made to include the scheduled oral statements on the agenda. The Chairperson of the Committee will conduct the meeting to facilitate the orderly conduct of business. Public comment will follow the 10-minute rule.

Minutes: The minutes of this meeting will be available for public review and copying within 30 days at the Freedom of Information Public Reading Room; 1E–190, Forrestal Building; 1000 Independence Avenue, SW; Washington, DC 20585; between 9 a.m. and 4 p.m., Monday through Friday, except holidays.

Issued in Washington, DC on October 1, 1999.

Rachel M. Samuel,

Deputy Advisory Committee Management Officer.

[FR Doc. 99–26027 Filed 10–5–99; 8:45 am]

BILLING CODE 6450–01–P

DEPARTMENT OF ENERGY

Environmental Management Site-Specific Advisory Board, Paducah; Meeting

AGENCY: Department of Energy (DOE).

ACTION: Notice of open meeting.

SUMMARY: This notice announces a meeting of the Environmental Management Site-Specific Advisory Board (EM SSAB), Paducah. The Federal Advisory Committee Act (Pub. L. 92–463, 86 Stat. 770) requires that public notice of these meetings be announced in the **Federal Register**.

DATE: Thursday, October 21, 1999: 6 p.m.—8:30 p.m.

ADDRESS: Paducah Information Age Park Resource Center, 2000 McCracken Blvd., Paducah, Kentucky, 42001.

FURTHER INFORMATION CONTACT: John D. Sheppard, Site Specific Advisory Board Coordinator, Department of Energy Paducah Site Office, Post Office Box 1410, MS–103, Paducah, Kentucky 42001, (502) 441–6804.

SUPPLEMENTARY INFORMATION:

Purpose of the Board: The purpose of the Board is to make recommendations to DOE and its regulators in the areas of environmental restoration and waste management activities.

Tentative Agenda

- Call to order
- Minutes
- Public comments and questions
- Update on DOE's Environmental Health investigation of environmental, health and safety concerns
- Information handouts
- Program status and updates:
  Environmental Management and Enrichment Facilities
  Depleted Uranium Hexafluoride
  Scrap metal
  Surface water operable unit work plan
- Site-wide cumulative effects
- Programmatic presentations:
  Land Use Control Assurance Plan (LUCAP)
  Waste Area Group 6
- SSAB committee reports:
  Community relations—Judy Ingram
  Consultant—Bill Tanner
  Membership—Nola Courtney
- Action items from September meeting
- SSAB recommendations status
- Administrative issues:
  Notification of members regarding news items
  Review of the SSAB draft work plan
  Future tours
  Financial update
  Chairs Meeting report
  Upcoming Stewardship conference in Oak Ridge

Public Participation: The meeting is open to the public. Written statements may be filed with the Committee either before or after the meeting. Individuals who wish to make oral statements pertaining to agenda items should contact John D. Sheppard at the address or telephone number listed above. Requests must be received 5 days prior to the meeting and reasonable provision will be made to include the presentation in the agenda. The Deputy Designated Federal Official is empowered to conduct the meeting in a fashion that will facilitate the orderly conduct of business. Each individual wishing to make public comment will be provided a maximum of 5 minutes to present their comments at the end of the meeting.

Minutes: The minutes of this meeting will be available for public review and copying at the Freedom of Information Public Reading Room, 1E–190, Forrestal Building, 1000 Independence Avenue, SW, Washington, DC 20585 between 9 a.m. and 4 p.m., Monday–Friday, except Federal holidays. Minutes will also be available at the Department of Energy's Environmental Information Center and Reading Room at 175 Freedom Boulevard, Highway 60, Kevil, Kentucky between 8 a.m. and 5 p.m. on Monday thru Friday or by writing to John D. Sheppard, Department of Energy Paducah Site Office, Post Office Box 1410, MS–103, Paducah, Kentucky 42001 or by calling him at (502) 441–6804.

Issued at Washington, DC on October 1, 1999.

Rachel M. Samuel,

Deputy Advisory Committee Management Officer

[FR Doc. 99–26025 Filed 10–5–99; 8:45 am]

BILLING CODE 6450–01–P

DEPARTMENT OF ENERGY

Environmental Management Site-Specific Advisory Board, Pantex Plant; Meeting

AGENCY: Department of Energy.

ACTION: Notice of open meeting.

SUMMARY: This notice announces a meeting of the Environmental Management Site-Specific Advisory Board (EM SSAB), Pantex Plant, Amarillo, Texas. The Federal Advisory Committee Act (Pub. L. No. 92–463, 86 Stat. 770) requires that public notice of these meetings be announced in the **Federal Register**.

DATE AND TIME: Tuesday, October 19, 1999: 1:30 p.m.–5 p.m.

ADDRESS: Radisson Inn, 1 H 40 East, Amarillo, TX.

FOR FURTHER INFORMATION CONTACT: Jerry S. Johnson, Assistant Area Manager, Department of Energy, Amarillo Area Office, P.O. Box 30030, Amarillo, TX 79120 (806) 477–3125.

SUPPLEMENTARY INFORMATION: *Purpose of the Board:* The purpose of the Board is to advise the Department of Energy and its regulators in the areas of environmental restoration, waste management, and related activities.

Tentative Agenda

1:30 Welcome-Agenda Review-Approval of minutes
1:45 Co-Chair Comments
2:00 Task Force/Subcommittee Reports
2:15 Ex-Officio Reports
2:30 Updates-Occurrence Reports-DOE
3:00 Break
3:15 Environmental Restoration/Off-Site Activities Update
4:15 Closing Remarks
4:30 Public Comments
5:00 Adjourn
5:00–7:00 Public Meeting: Update of Pantex Environmental Restoration Program

Public Participation: The meeting is open to the public. Written statements may be filed with the Committee either before or after the meeting. Individuals who wish to make oral statements pertaining to agenda items should contact Jerry Johnson's office at the address or telephone number listed above. Requests must be received 5 days prior to the meeting and every reasonable provision will be made to accommodate the request in the agenda. The Deputy Designated Federal Official is empowered to conduct the meeting in a fashion that will facilitate the orderly conduct of business. Each individual wishing to make public comment will be provided a maximum of 5 minutes to present their comments. This notice is published less than 15 days in advance of the meeting due to programmatic issues.

Minutes: The minutes of this meeting will be available for public review and copying at the Pantex Public Reading Rooms located at the Amarillo College Lynn Library and Learning Center, 2201 South Washington, Amarillo, TX phone (806) 371–5400. Hours of operation are from 7:45 am to 10 p.m. Monday through Thursday; 7:45 am to 5 p.m. on Friday; 8:30 am to 12 noon on Saturday; and 2 p.m. to 6 p.m. on Sunday, except for Federal holidays. Additionally, there is a Public Reading Room located at the Carson County Public Library, 401 Main Street, Panhandle, TX phone (806) 537–3742. Hours of operation are from 9 am to 7 pm on Monday; 9 am to 5 p.m. Tuesday through Friday; and closed Saturday and Sunday as well as Federal Holidays. Minutes will also be available by writing or calling Jerry S. Johnson at the address or telephone number listed above.

Issued at Washington, DC on October 1, 1999.

Rachel M. Samuel,

Deputy Advisory Committee Management Officer.

[FR Doc. 99–26026 Filed 10–5–99; 8:45 am]

BILLING CODE 6450–01–P

DEPARTMENT OF ENERGY

Federal Energy Regulatory Commission

[Docket No. RP99–514–000]

Destin Pipeline Company, L.L.C.; Notice of Proposed Changes to FERC Gas Tariff

September 30, 1999.

Take notice that on September 29, 1999, Destin Pipeline Company, L.L.C. (Destin) tendered for filing a limited rate filing pursuant to Section 4 of the Natural Gas Act, 15 U.S.C. 717(c)(1988) (NGA).

Destin states that this filing was made in accordance with Destin's July 24, 1996 Application for Certificate of Public Convenience and Necessity, as amended by Destin's March 14, 1997 Amendment to Application for Certificate of Public Convenience and Necessity (Application), which was approved by the Federal Energy Regulatory Commission (Commission) in its Preliminary Determination on Non-Environmental Issues and Issuance of Blanket Certificate issued on June 27, 1997 (Preliminary Determination), and its Order on Rehearing and Issuing Certificates dated November 17, 1997 (November 17 Order) in Docket Nos.

CP96–655–000 and 001, CP96–656–000 and 001, and CP96–657–000 and 001.

Destin submitted for filing the following revised sheets to its FERC Gas Tariff, Original Volume No. 1, to be effective November 1, 1999:

Primary Sheets

Second Revised Sheet No. 5
Second Revised Sheet No. 6
Second Revised Sheet No. 7

Alternate Sheets

First Alternate Second Revised Sheet No. 5
First Alternate Second Revised Sheet No. 6
First Alternate Second Revised Sheet No. 7

Destin has requested an effective date of November 1, 1999.

Destin states that the purpose of this instant filing is to adjust its rates under Rate Schedules FT–1, FT–2, and IT (i) to reflect its actual cost of constructing its Destin Pipeline Facilities and (ii) to reflect a lower depreciation rate. Specifically, Destin proposes to increase the maximum Monthly Reservation Rate under Rate Schedules FT–1 and FT–2 from $7.19 to $8.22 and the daily Reservation Rate under Rate Schedules FT–1 and FT–2 and the Daily Overrun Rate under Rate Schedule FT–2 from $0.24 (inclusive of the transportation component) to $0.274.

Destin also seeks to increase the maximum transportation rate under Rate Schedule IT from 24.0¢ to 27.4¢. Destin states that these rates are set forth in the primary tariff sheets.

Destin also filed alternate tariff sheets that reflect only the rate increase resulting from the increase in the capital cost of the Destin Pipeline facilities. Destin states that the alternate sheets are posed to preserve the timeliness of the compliance rate increase filing in the event of a challenge to Destin's proposed depreciation rate change.

Destin states that copies of the filing will be served upon its shippers and interested state commissions.

Any person desiring to be heard or to protest said filing should file a motion to intervene or a protest with the Federal Energy Regulatory Commission, 888 First Street, NE, Washington, DC 20426, in accordance with Sections 385.214 or 385.211 of the Commission's Rules and Regulations. All such motions or protests must be filed in accordance with Section 154.210 of the Commission's Regulations. Protests will be considered by the Commission in determining the appropriate action to be taken, but will not serve to make protestants parties to the proceedings. Any person wishing to become a party must file a motion to intervene. Copies of this filing are on file with the Commission and are available for public inspection in the Public Reference Room. This filing may be viewed on the web at http://www.ferc.fed.us/online/rims.htm (call 202–208–2222 for assistance).

Linwood A. Watson, Jr.,

Acting Secretary.

[FR Doc. 99–26018 Filed 10–5–99; 8:45 am]

BILLING CODE 6717–01–M

DEPARTMENT OF ENERGY

Federal Energy Regulatory Commission

[Docket No. PR99–16–000]

Dow Intrastate Gas Company; Notice of Shortened Comment Period

September 30, 1999.

On September 28, 1999, Dow Intrastate Gas Company (DIGCO) filed a proposed Stipulation and Agreement reflecting an uncontested Settlement Offer (Offer) filed in this proceeding pursuant to Rule 602 of the Commission's Regulations (18 CFR 385.602). DIGCO also requested a shortened comment period under Rule 602(f). There are no intervenors in this proceeding.

For good cause shown, the Commission directs the establishment of a shortened comment period under Rule 602(f), and requires initial comments on the Offer to be filed on or before October 5, 1999, with reply comments due by October 8, 1999.

Linwood A. Watson, Jr.,

Acting Secretary.

[FR Doc. 99–26024 Filed 10–5–99; 8:45 am]

BILLING CODE 6717–01–M

DEPARTMENT OF ENERGY

Federal Energy Regulatory Commission

[Docket No. RP99–176–007]

Natural Gas Pipeline Company of America; Notice of Proposed Change in FERC Gas Tariff

September 30, 1999.

Take notice that on September 27, 1999, Natural Gas Pipeline Company of America (Natural) tendered for filing to be a part of its FERC Gas Tariff, Sixth Revised Volume No. 1, First Revised Sheet No. 26A, to be effective September 25, 1999.

Natural states that the purpose of this filing is to implement a Negotiated Rate transaction with Aquila Energy Marketing Corporation under Rate Schedule FTS pursuant to Section 49 of the General Terms and Conditions of Natural's tariff. Natural will submit a copy of the executed service agreement shortly.

Natural requested waiver of the Commission's Regulations, including the 30-day notice requirement of Section 154.207, to the extent necessary to permit First Revised Sheet No. 26A to become effective September 25, 1999.

Natural states that copies of the filing are being mailed to its customers, interested state regulatory commissions and all parties set out on the official service list at Docket No. RP99–176.

Any person desiring to protest this filing should file a protest with the Federal Energy Regulatory Commission, 888 First Street, NE, Washington, DC 20426, in accordance with Section 385.211 of the Commission's Rules and Regulations. All such protests must be filed as provided in Section 154.210 of the Commission's Regulations. Protests will be considered by the Commission in determining the appropriate action to be taken, but will not serve to make protestants parties to the proceedings. Copies of this filing are on file with the Commission and are available for public inspection in the Public Reference Room. This filing may be viewed on the web at http://www.ferc.fed.us/online/rims.htm (call 202–208–2222 for assistance).

Linwood A. Watson, Jr.,

Acting Secretary.

[FR Doc. 99–26014 Filed 10–5–99; 8:45 am]

BILLING CODE 6717–01–M

DEPARTMENT OF ENERGY

Federal Energy Regulatory Commission

[Docket No. CP99–637–000]

Northwest Pipeline Corporation; Notice of Request Under Blanket Authorization

September 30, 1999.

Take notice that on September 29, 1999, Northwest Pipeline Corporation (Northwest), 295 Chipeta Way, Salt Lake City, Utah 84158, filed in Docket No. CP99–627–000, a request for approval to abandon its operation of metering facilities owned by Northwest Natural Gas Company (NW Natural) at Northwest's Weyerhaeuser Tree Farm Tap delivery point in Marion County, Oregon; all as more fully set forth in the request that is filed with the Commission and open to public inspection. This filing may be viewed on the web at http://www.ferc.fed.us/online/rims.htm (call 202–208–2222 for assistance).

Northwest states that NW Natural has agreed to assume responsibility for the operation and maintenance of the subject facilities.

Any questions regarding this application should be directed to Gary K. Kotter, Manager, Certificates, Northwest Pipeline Corporation, 295 Chipeta Way, Salt Lake City, Utah 84108, (801) 584–7117. Any person or the Commission Staff may, within 45 days after issuance of the instant notice by the Commission, file pursuant to rule 214 of the Commission's Procedural Rules (18 CFR 285.214) a motion to intervene or notice of intervention and pursuant to section 157.205 of the Regulations under the Natural Gas Act (18 CFR 157.205) a protest to the request. If no protest is filed within the time allowed therefore, the proposed activity shall be deemed to be authorized effective the day after the time allowed for filing a protest. If a protest is filed and not withdrawn within 30 days after the time allowed for filing a protest, the instant request shall be treated as an application for authorization pursuant to section 7 of the Natural Gas Act.

Linwood A. Watson, Jr.,

Acting Secretary.

[FR Doc. 99–26020 Filed 10–5–99; 8:45 am]

BILLING CODE 6717–01–M

DEPARTMENT OF ENERGY

Federal Energy Regulatory Commission

[Docket Nos. MG99–27–000; MG99–28–000; MG99–29–000; and MG99–30–000]

Panhandle Eastern Pipe Line Co.; Southwest Gas Storage Co.; Trunkline Gas Co.; and Trunkline LNG Co.; Notice of Filing

September 30, 1999.

Take notice that on September 24, 1999, Panhandle Eastern Pipe Line Co. (PEPL), Southwest Gas Storage Co. (Southwest), Trunkline Gas Co. (Trunkline) and TrunklineNG Co. (Trunkline LNG) filed revised standards of conduct under Order Nos. 497 *et seq.*,[1] Order Nos. 566 *et seq.*[2] and Order No. 599.[3]

PEPL, Southwest, Trunkline and Trunkline LNG state that their filings reflect their acquisition by CMS Energy Corporation, effective March 29, 1999, and that they no longer share telephone equipment, computer systems or Local Area Networks with their marketing affiliates.

Any person desiring to be heard or to protest said filings should file a motion to intervene or protest in each proceeding with the Federal Energy Regulatory Commission, 888 First Street, NE, Washington, DC 20426, in accordance with rules 211 or 214 of the Commission's rules of practice and procedure (18 CFR 385.211 or 385.214). All such motions to intervene or protest should be filed on or before October 15, 1999. Protests will be considered by the Commission in determining the appropriate action to be taken but will not serve to make protestants parties to the proceeding. Any person wishing to become a party must file a motion to intervene in each proceeding. Copies of these filings are on file with the Commission and are available for public inspection. These filings may be viewed on the web at http://www.ferc.fed.us/online/rims.htm (call 202–208–2222 for assistance).

Linwood A. Watson, Jr.,

Acting Secretary.

[FR Doc. 99–26021 Filed 10–5–99; 8:45 am]

BILLING CODE 6717–01–M

[1] Order No. 497, 53 FR 22139 (June 14 1988), FERC Stats. & Regs. 1986–1990 ¶ 30,820 (1988); Order No. 497–A *order on rehearing.* 54 FR 52781 (December 22, 1989), FERC Stats. & Regs. 1986–1990 ¶ 30,868 (1989); Order No. 497–B, *order extending sunset date*, 55 FR 53291 (December 28, 1990), FERC Stats. & Regs. 1986–1990 ¶ 30,908 (1990); Order No. 497–C, *order extending sunset date*, 57 FR 9 (January 2, 1992), FERC Stats. & Regs. 1991–1996 ¶ 30,934 (1991), *rehearing denied*, 57 FR 5815 (February 18, 1992), 58 FERC ¶ 61,139 (1992); Tenneco Gas v. FERC (affirmed in part and remanded in part), 969 F.2d 1187 (D.C. Cir. 1992); Order No. 497–D, *order on remand and extending sunset date*, 57 FR 58978 (December 14, 1992), FERC Stats. & Regs. 1991–1996 ¶ 30,958 (December 4, 1992); Order No. 497–E, *order on rehearing and extending sunset date*, 59 FR 243 (January 4, 1994), FERC Stats. & Regs. 1991–1996 ¶ 30,958 (December 23, 1993); Order No. 497–F, *order denying rehearing and granting clarification*, 59 FR 15336 (April 1, 1994), 66 FERC ¶ 61,347 (March 24, 1994); and Order No. 497–G, *order extending sunset date*, 59 FR 32884 (June 27, 1994), FERC Stats. & Regs. 1991–1996 ¶ 30,996 (June 17, 1994).

[2] Standards of Conduct and Reporting Requirements for Transportation and Affiliate Transactions, Order No. 566, 59 FR 32885 (June 27, 1994), FERC Stats. & Regs. 1991–1996 ¶ 30,997 (June 17, 1994); Order No. 566–A, *order on rehearing*, 59 FR 52896 (October 20, 1994), 69 FERC ¶ 61,044 (October 14, 1994); Order No. 566–B, *order on rehearing*, 59 FR 65707 (December 21, 1994), 69 FERC ¶ 61,334 (December 14, 1994).

[3] Reporting Interstate Natural Gas Pipeline Marketing Affiliates on the Internet, Order No. 599, 63 FR 43075 (August 12, 1998), FERC Stats. & Regs. ¶ 31,064 (1998).

DEPARTMENT OF ENERGY

Federal Energy Regulatory Commission

[Docket No. RP99–511–000]

PG&E Gas Transmission, Northwest Corporation; Notice of Proposed Change in FERC Gas Tariff

September 30, 1999.

Take notice that on September 24, 1999, PG&E Gas Transmission, Northwest Corporation (PG&E GT–NW) tendered for filing as part of its FERC Gas Tariff, First Revised Volume No. 1–A, Twentysixth Revised Sheet No. 4, with an effective date of November 1, 1999.

PG&E GT–NW states that this tariff sheet is filed to modify the rate for service under Rate Schedule FTS–1 (E–2)(WWP) in accordance with the negotiated rate formula for that service as specified in PG&E GT–NW's tariff.

PG&E GT–NW further states that a copy of this filing has been served on PG&E GT–NW's jurisdictional customers and interested state regulatory agencies.

Any person desiring to be heard or to protest said filing should file a motion to intervene or a protest with the Federal Energy Regulatory Commission, 888 First Street NE, Washington, DC 20426, in accordance with Section 385.214 or 385.211 of the Commission's Rules and Regulations. All such motions or protests must be filed in accordance with Section 154.210 of the Commission's Regulations. Protests will be considered by the Commission in determining the appropriate action to be taken, but will not serve to make protestants parties to the proceedings. Any person wishing to become a party must file a motion to intervene. Copies of the filing are on file with the Commission and are available for public inspection in the Public Reference Room. This filing may be viewed on the web at http://www.ferc.fed.us/online/rims.htm (call 202–208–2222 for assistance).

Linwood A. Watson, Jr.,

Acting Secretary.

[FR Doc. 99–26015 Filed 10–5–99; 8:45 am]

BILLING CODE 6717–01–M

DEPARMENT OF ENERGY

Federal Energy Regulatory Commission

[Docket No. RP99–513–000]

Questar Pipeline Company; Notice of Tariff Filing

September 30, 1999.

Take notice that on September 28, 1999, Questar Pipeline Company (Questar) tendered for filing as part of its FERC Gas Tariff, First Revised Volume No. 1, the following tariff sheets to be effective October 28, 1999:

Fifth Revised Sheet No. 1
First Revised Sheet No. 11
Third Revised Sheet No. 14
First Revised Sheet No. 15
Original Sheet No. 16
Second Revised Sheet No. 22
Second Revised Sheet No. 23
First Revised Sheet No. 24
Original Sheet No. 25
First Revised Sheet No. 30
First Revised Sheet No. 32
First Revised Sheet No. 33
Tenth Revised Sheet No. 40
First Revised Sheet No. 99F
Original Sheet No. 99G
Original Sheet No. 99H
Original Sheet No. 99I
Original Sheet No. 99J
Second Revised Sheet No. 100
Second Revised Sheet No. 101
First Revised Sheet No. 102
Second Revised Sheet No. 141
Second Revised Sheet No. 142
First Revised Sheet No. 143
Third Revised Sheet No. 150
Third Revised Sheet No. 151
First Revised Sheet No. 151
First Revised Sheet No. 184
Third Revised Sheet No. 186
First Revised Sheet No. 187
Third Revised Sheet No. 188
Second Revised Sheet No. 192
Second Revised Sheet No. 193

Questar tendered its proposed tariff sheets to revise its FERC Gas Tariff to implement provisions permitting Questar and its shippers to negotiate mutually acceptable rates as provided by the Commission's Policy Statement issued January 31, 1996, in Docket No. RM95–6.

Questar states that a copy of this filing has been served upon its customers, the Public Service Commission of Utah and the Public Service Commission of Wyoming.

Any person desiring to be heard or to protest said filing should file a motion to intervene or a protest with the Federal Energy Regulatory Commission, 888 First Street, NW, Washington DC 20426, in accordance with Sections 385.214 or 385.211 of the Commission's Rules and Regulations. All such motions or protests must be filed in accordance with Section 154.210 of the Commission's Regulations. Protests will be considered by the Commission in determining the appropriate action to be taken, but will not serve to make protestants parties to the proceedings. Any person wishing to become a party must file a motion to intervene. Copies of this filing are on file with the Commission and are available for public inspection in the Public Reference Room. This filing may be viewed on the web at http://www/ferc.fed.us/online/rims.htm (call 202–208–2222 for assistance).

Linwood A. Watson, Jr,.

Acting Secretary.

[FR Doc. 99–26017 Filed 10–5–99; 8:45 am]

BILLING CODE 6717–01–M

DEPARTMENT OF ENERGY

Federal Energy Regulatory Commission

[Docket No. RP96–312–021]

Tennessee Gas Pipeline Company; Notice of Negotiated Rate Filing

September 30, 1999.

Take notice that on September 27, 1999, Tennessee Gas Pipeline Company (Tennessee) tendered for filing seven (7) firm service agreements and a description of the essential conditions involved in agreeing to seven (7) Negotiated Rate Arrangements. Tennessee requests that the Commission approve the Negotiated Rate Arrangements by October 22, 1999 to be effective November 1, 1999.

Tennessee states that the filed Negotiated Rate Agreements reflect either a negotiated rate between Tennessee and Boston Gas Company (Boston) or a negotiated rate between Tennessee and Essex County Gas (Essex) for transportation and storage service, as applicable under various firm transportation and storage service agreements for a four (4) year period with each to be effective beginning November 1, 1999.

Any person desiring to protest said filing should file a protest with the Federal Energy Regulatory Commission, 888 First Street, NE, Washington, DC 20426, in accordance with Section 385.211 of the Commission's Rules and Regulations. All such protests must be filed on or before October 7, 1999. Protests will be considered by the Commission in determining the appropriate action to be taken, but will not serve to make protestants parties to the proceedings. Copies of this filing are on file with the Commission and are available for public inspection in the Public Reference Room. This filing may be viewed on the web at http://www.ferc.fed.us/online/rims.htm (call 202–208–2222 for assistance).

Linwood A. Watson, Jr.,

Acting Secretary.

[FR Doc. 99–26009 Filed 10–5–99; 8:45 am]

BILLING CODE 6717–01–M

DEPARTMENT OF ENERGY

Federal Energy Regulatory Commission

[Docket No. RP96–312–022]

Tennessee Gas Pipeline Company; Notice of Negotiated Rate Filing

September 30, 1999.

Take notice that on September 27, 1999, Tennessee Gas Pipeline Company (Tennessee) tendered for filing three firm service agreements and a description of the essential conditions involved in agreeing to three (3) Negotiated Rate Arrangements. Tennessee requests that the Commission approve the Negotiated Rate Arrangements by October 22, 1999 to be effective November 1, 1999.

Tennessee states that the filed Negotiated Rate Agreements reflect a negotiated rate between Tennessee and Colonial Gas Company (Colonial) for transportation and storage service, as applicable, under various firm transportation and storage service agreements for a four (4) year period with each to be effective beginning November 1, 1999.

Any person desiring to protest said filing should file a protest with the Federal Energy Regulatory Commission, 888 First Street, NE, Washington, DC 20426, in accordance with Section 385.211 of the Commission's Rules and Regulations. All such protests must be filed on or before October 7, 1999. Protests will be considered by the Commission in determining the appropriate action to be taken, but will not serve to make protestants parties to the proceedings. Copies of this filing are on file with the Commission and are available for public inspection in the Public Reference Room. This filing may be viewed on the web at http://www.ferc.fed.us/online/rims.htm (call 202–208–2222 for assistance).

Linwood A. Watson, Jr.,

Acting Secretary.

[FR Doc. 99–26010 Filed 10–5–99; 8:45 am]

BILLING CODE 6717–01–M

DEPARTMENT OF ENERGY

Federal Energy Regulatory Commission

[Docket No. RP96–312–023]

Tennessee Gas Pipeline Company; Notice of Negotiated Rate Filing

September 30, 1999.

Take notice that on September 27, 1999, Tennessee Gas Pipeline Company (Tennessee) tendered for filing a Negotiated Rate Arrangement. Tennessee requests that the Commission approve the Negotiated Rate Arrangement effective November 1, 1999.

Tennessee states that the filed Negotiated Rate Agreements reflect a negotiated rate between Tennessee and Sempra Energy Trading Corp. (Sempra) for transportation under Rate Schedule FT–BH beginning on November 1, 1999 for a five year period.

Any person desiring to protest said filing should file a protest with the Federal Energy Regulatory Commission, 888 First Street, NE, Washington, DC 20426, in accordance with Section 385.211 of the Commission's Rules and Regulations. All such protests must be filed on or before October 7, 1999. Protests will be considered by the Commission in determining the appropriate action to be taken, but will not serve to make protestants parties to the proceedings. Copies of this filing are on file with the Commission and are available for public inspection in the Public Reference Room. This filing may be viewed on the web at http://www.ferc.fed.us/online/rims.htm (call 202–208–2222 for assistance).

Linwood A. Watson, Jr.,

Acting Secretary.

[FR Doc. 99–26011 Filed 10–5–99; 8:45 am]

BILLING CODE 6717–01–M

DEPARTMENT OF ENERGY

Federal Energy Regulatory Commission

[Docket No. RP96–312–024]

Tennessee Gas Pipeline Company; Notice of Negotiated Rate Filing

September 30, 1999.

Take notice that on September 27, 1999, Tennessee Gas Pipeline Company (Tennessee) tendered for filing a Negotiated Rate Arrangement. Tennessee requests that the Commission approve the Negotiated Rate Arrangements effective November 1, 1999.

Tennessee states that the filed Negotiated Rate Agreements reflects a negotiated rate between Tennessee and El Paso Energy Marketing Company (EPEM) for transportation under Rate Schedule FT–A beginning on November 1, 1999 for a five year period.

Any person desiring to protest said filing should file a protest with the Federal Energy Regulatory Commission, 888 First Street, NE, Washington, DC 20426, in accordance with Section 385.211 of the Commission's Rules and Regulations. All such protests must be filed on or before October 7, 1999. Protests will be considered by the Commission in determining the appropriate action to be taken, but will not serve to make protestants parties to the proceedings. Copies of this filing are on file with the Commission and are available for public inspection in the Public Reference Room. This filing may be viewed on the web at http://www.ferc.fed.us/online/rims.htm (call 202–208–2222 for assistance).

Linwood A. Watson, Jr.,

Acting Secretary.

[FR Doc. 99–26012 Filed 10–5–99; 8:45 am]

BILLING CODE 6717–01–M

DEPARTMENT OF ENERGY

Federal Energy Regulatory Commission

[Docket No. RP97–255–004]

TransColorado Gas Transmission Company; Notice of Tariff Filing

September 30, 1999.

Take notice that on September 28, 1999, TransColorado Gas Transmission Company (TransColorado's) tendered for filing as part of its FERC Gas Tariff, Original Volume No. 1, Fourth Revised Sheet No. 21, to be effective September 1, 1999.

TransColorado states that the filing is being made in compliance with the Commission's letter order issued March 20, 1997, in Docket No. RP97–255–000.

TransColorado states that the tendered tariff sheet revises TransColorado's Tariff to implement a new negotiated-rate transaction between TransColorado and Burlington Resources Trading Inc., to be effective September 1, 1999.

TransColorado also deleted the reference to the negotiated-rate contract with Texaco Natural Gas Inc. that terminated April 30, 1999.

TransColorado states that a copy of this filing has been served upon its customers, the Colorado Public Utilities Commission and New Mexico Public Regulatory Commission.

Any person desiring to protest this fling should file a protest with the Federal Energy Regulatory Commission, 888 First Street, NE, Washington, DC 20426, in accordance with Section 385.211 of the Commission's Rules and Regulations. All such protests must be filed as provided in Section 154.210 of the Commission's Regulations. Protests will be considered by the Commission in determining the appropriate action to be taken, but will not serve to make protestants parties to the proceedings. Copies of this filing are on file with the Commission and are available for public inspection in the Public Reference Room. This filing may be viewed on the web at http://www.ferc.fed.us/online/rims.htm (call 202–208–2222 for assistance.).

Linwood A. Watson, Jr.,

Acting Secretary.

[FR Doc. 99–26013 Filed 10–5–99; 8:45 am]

BILLING CODE 6717–01–M

DEPARTMENT OF ENERGY

Federal Energy Regulatory Commission

[Docket No. RP99–512–000]

Trunkline Gas Company; Notice of Proposed Changes in FERC Gas Tariff

September 30, 1999.

Take notice that on September 24, 1999, Trunkline Gas Company (Trunkline) tendered for filing as part of its FERC Gas Tariff, First Revised Volume No. 1, the revised tariff listed on Appendix A attached to the filing, to be effective November 1, 1999.

Trunkline states that this filing is being made in accordance with the provisions of Section 154.204 of the Commission's Regulations, is to: (1) Update the General Terms and Conditions and the Form of Service Agreements for address and telephone number changes; (2) delete the prefix in the date area of the Form of Service Agreements to be Y2K complaint; (3) update the marketing affiliate information in the General Terms and Conditions Section 18 as necessitated by the acquisition of Trunkline by CMS Energy Corporation; (4) make minor revisions to reduce the size of Exhibit A to the Capacity Release Service Agreement to enable Trunkline to autofax Exhibit A to the replacement shipper; and (5) reflect other housekeeping changes.

Trunkline states that copies of this filing are being served on all affected customers and applicable state regulatory agencies.

Any person desiring to be heard or to protest said filing should file a motion to intervene or a protest with the Federal Energy Regulatory Commission, 888 First Street, NE, Washington, DC 20426, in accordance with Sections 385.214 or 385.211 of the Commission's Rules and Regulations. All such motions or protests must be filed in accordance with Section 154.210 of the Commission's Regulations. Protests will be considered by the Commission in determining the appropriate action to be taken, but will not serve to make protestants parties to the proceedings. Any person wishing to become a party must file a motion to intervene. Copies of this filing are on file with the Commission and are available for public inspection in the Public Reference Room. This filing may be viewed on the web at http://www.ferc.fed.us/online/rims.htm (call 202–208–2222 for assistance).

Linwood A. Watson, Jr.,

Acting Secretary.

[FR Doc. 99–26016 Filed 10–5–99; 8:45 am]

BILLING CODE 6717–01–M

DEPARTMENT OF ENERGY

Federal Energy Regulatory Commission

[Docket No. EC99–115–000, et al.]

Strategic Energy, L.L.C., et al.; Electric Rate and Corporate Regulation Filings

September 29, 1999.

Take notice that the following filings have been made with the Commission:

1. Strategic Energy, L.L.C.

[Docket No. EC99–115–000]

Take notice that on September 23, 1999, Strategic Energy, L.L.C., a power marketer authorized by the Federal Energy Regulatory Commission to sell power at market-based rates, submitted for filing an application seeking an order pursuant to Section 203 of the Federal Power Act authorizing the conveyance of jurisdictional facilities associated with a corporate reorganization of its parent company Custom Energy, L.L.C. Pursuant to the reorganization, the membership interests of the four current owners of Custom Energy, L.L.C. will change, and Custom Energy, L.L.C. will be renamed CE Holdings, L.L.C.

Comment date: October 25, 1999, in accordance with Standard Paragraph E at the end of this notice.

2. Public Service Company of New Mexico

[Docket No. EC99–116–000]

Take notice that on September 27, 1999, pursuant to Section 203 of the Federal Power Act, the Public Service Company of New Mexico (PNM) filed an application seeking an order or other appropriate determination approving PNM's purchase of certain jurisdictional assets from Tri-State Generation and Transmission Association, Inc. (Tri-State).

Copies of this filing have been served upon Tri-State, Plains Electric Generation and Transmission Cooperative, Inc., Navopache Electric Cooperative, Inc. and the New Mexico Public Regulation Commission.

Comment date: October 27, 1999, in accordance with Standard Paragraph E at the end of this notice.

3. Aurora Power Resources, Inc.

[Docket No. ER98–573–002]

Take notice that on September 24, 1999, Aurora Power Resources, Inc. filed its quarterly report for the quarter ending June 30, 1999, for information only.

4. Michigan Gas Exchange, LLC

[Docket No. ER99–1156–002]

Take notice that on September 23, 1999, Michigan Gas Exchange, LLC filed its quarterly report for quarters ending June 30, 1999, September 30, 1999 and December 31, 1999, for information only.

5. EME Homer City Generation, L.P., Harbor Cogeneration Company, Grayling Generating Station L.P.

[Docket Nos. ER99–4522–000, ER99–4523–000, ER99–4525–000]

Take notice that on September 24, 1999 the above-mentioned affiliated power producers and/or public utilities filed their quarterly reports for the quarter ending June 30, 1999.

6. Niagara Mohawk Power Corporation

[Docket No. ER99–4514–000]

Take notice that on September 23, 1999, Niagara Mohawk Power Corporation (Niagara Mohawk), tendered for filing notice that effective September 1, 1998, Niagara Mohawk's Transmission Facilities Use Agreement, designated as Rate Schedule FERC No. 186, effective date December 18, 1984, and any supplements thereto, and filed with the Federal Energy Regulatory Commission by Niagara Mohawk is to be canceled.

Copies of the notice of the proposed cancellation has been served upon the New York Power Authority.

Comment date: October 13, 1999, in accordance with Standard Paragraph E at the end of this notice.

7. PP&L Great Works, LLC

[Docket No. ER99–4503–000]

Take notice that on September 23, 1999, PP&L Great Works, LLC (Great Works), tendered for filing with the Commission an application for authorization to sell electric energy, capacity and ancillary services at market-based rates and to reassign transmission capacity and for certain waivers and blanket approvals. Great Works is a wholly-owned indirect subsidiary of PP&L Resources, Inc.

Comment date: October 13, 1999, in accordance with Standard Paragraph E at the end of this notice.

8. Arizona Public Service Company

[Docket No. ER99–4504–000]

Take notice that on September 23, 1999, Arizona Public Service Company (APS), tendered for filing umbrella Service Agreements to provide short-term Firm Point-to-Point Transmission Service to Constellation Power Source, Inc., Entergy Power Marketing Corp., Reliant Energy Services, Inc., and short-term Firm and Non-Firm Point-to-Point Transmission Service to Los Angeles Department of Water and Power Wholesale Marketing under APS' Open Access Transmission Tariff.

A copy of this filing has been served on Constellation Power Source, Inc., Entergy Power Marketing Corp., Reliant Energy Services, Inc., Los Angeles Department of Water and Power Wholesale Marketing, and the Arizona Corporation Commission.

Comment date: October 13, 1999, in accordance with Standard Paragraph E at the end of this notice.

9. Florida Power Corporation

[Docket No. ER99–4507–000]

Take notice that on September 23, 1999, Florida Power Corporation (FPC), tendered for filing an executed service agreement between Entergy Power Marketing Corporation and FPC for service under FPC's Cost-Based Wholesale Power Sales Tariff (CR–1), FERC Electric Tariff, Original Volume No. 9.

FPC requests an effective date of September 20, 1999, for the service agreement.

10. Carolina Power & Light Company

[Docket No. ER99–4506–000]

Take notice that on September 23, 1999, Carolina Power & Light Company (CP&L), tendered for filing an executed Service Agreement with East Kentucky

Power Cooperative, Inc., under the provisions of CP&L's Market-Based Rates Tariff, FERC Electric Tariff No. 4.

CP&L is requesting an effective date of September 1, 1999, for this Agreement.

Copies of the filing were served upon the North Carolina Utilities Commission and the South Carolina Public Service Commission.

Comment date: October 13, 1999, in accordance with Standard Paragraph E at the end of this notice.

11. MidAmerican Energy Company

[Docket No. ER99–4505–000]

Take notice that on September 23, 1999, MidAmerican Energy Company (MidAmerican), 666 Grand Avenue, Des Moines, Iowa 50309, tendered for filing with the Commission a Firm Transmission Service Agreement with MidAmerican Energy Company (MidAmerican, as a wholesale merchant) dated August 30, 1999, entered into pursuant to MidAmerican's Open Access Transmission Tariff.

MidAmerican requests an effective date of August 30, 1999, for the Firm Transmission Service Agreement, and accordingly seeks a waiver of the Commission's notice requirement.

MidAmerican has served a copy of the filing on the Iowa Utilities Board, the Illinois Commerce Commission and the South Dakota Public Utilities Commission.

Comment date: October 13, 1999, in accordance with Standard Paragraph E at the end of this notice.

12. Northwest Regional Transmission Association

[Docket No. ER99–4508–000]

Take notice that on September 23, 1999, the Northwest Regional Transmission Association tendered for filing an amendment to its Governing Agreement. This amendment would permit end use customers to become members of NRTA and to revise the voting rules relating to individual class voting.

Comment date: October 13, 1999, in accordance with Standard Paragraph E at the end of this notice.

13. PJM Interconnection, L.L.C.

[Docket No. ER99–4509–000]

Take notice that on September 23, 1999, PJM Interconnection, L.L.C. (PJM), tendered for filing an executed umbrella service agreement for non-firm point-to-point transmission service, and an umbrella service agreement for network integration service under state required retail access programs with Central Hudson Enterprises Corp.

Copies of this filing were served upon the party to these service agreements.

Comment date: October 13, 1999, in accordance with Standard Paragraph E at the end of this notice.

14. Puget Sound Energy, Inc.

[Docket No. ER99–4510–000]

Take notice that on September 23, 1999, Puget Sound Energy, Inc. (PSE), tendered for filing a Service Agreement under the provisions of PSE's market-based rates tariff, FERC Electric Tariff, First Revised Volume No. 8, with Duke Energy Trading and Marketing, L.L.C., (DETM).

A copy of the filing was served upon DETM.

Comment date: October 13, 1999, in accordance with Standard Paragraph E at the end of this notice.

15. Commonwealth Atlantic Limited Partnership

[Docket No. ER99–4515–000]

Take notice that on September 23, 1999, Commonwealth Atlantic Limited Partnership (CALP), owner of a 310 MW generating facility located in the City of Chesapeake, Virginia, petitioned the Commission for acceptance of an amendment to certain liquidated damages provisions of its Power Purchase and Operating Agreement with Virginia Electric and Power Company.

CALP requested waiver of the 60-day notice requirement and an effective date of September 22, 1999.

Comment date: October 13, 1999, in accordance with Standard Paragraph E at the end of this notice.

16. Idaho Power Company

[Docket No. ER99–4516–000]

Take notice that on September 23, 1999, Idaho Power Company (IPC), tendered for filing with the Federal Energy Regulatory Commission a Service Agreement for Firm Point-to-Point Transmission Service between Idaho Power Company and Cargill-Alliant, LLC.

Comment date: October 13, 1999, in accordance with Standard Paragraph E at the end of this notice.

17. Midwest Energy, Inc.

[Docket No. ER99–4517–000]

Take notice that on September 23, 1999, Midwest Energy, Inc. (Midwest), tendered for filing with the Federal Energy Regulatory Commission an Amendment to Interconnection Agreement entered into between Midwest and Sunflower Electric Power Corporation.

Midwest states that it is serving copies of the instant filing to its customers, State Commissions and other interested parties.

Comment date: October 13, 1999, in accordance with Standard Paragraph E at the end of this notice.

18. Deseret Generation & Transmission Co-operative

[Docket No. ER99–4520–000]

Take notice that on September 23, 1999, Deseret Generation & Transmission Co-operative tendered for filing an executed umbrella short-term firm point-to-point service agreement with Public Service Company of Colorado (Merchant Function) under its open access transmission tariff. Deseret's open access transmission tariff is currently on file with the Commission in Docket No. OA97–487–000.

Deseret requests a waiver of the Commission's notice requirements for an effective date of September 23, 1999.

Public Service Company of Colorado has been provided a copy of this filing.

Comment date: October 13, 1999, in accordance with Standard Paragraph E at the end of this notice.

Standard Paragraphs

E. Any person desiring to be heard or to protest such filing should file a motion to intervene or protest with the Federal Energy Regulatory Commission, 888 First Street, NE, Washington, DC 20426, in accordance with Rules 211 and 214 of the Commission's Rules of Practice and Procedure (18 CFR 385.211 and 385.214). All such motions or protests should be filed on or before the comment date. Protests will be considered by the Commission in determining the appropriate action to be taken, but will not serve to make protestants parties to the proceeding. Any person wishing to become a party must file a motion to intervene. Copies of these filings are on file with the Commission and are available for public inspection. This filing may also be viewed on the Internet at http://www.ferc.fed.us/online/rims.htm (call 202–208–2222 for assistance).

David P. Boergers,

Secretary.

[FR Doc. 99–25922 Filed 10–5–99; 8:45 am]

BILLING CODE 6717–01–P

DEPARTMENT OF ENERGY

Federal Energy Regulatory Commission

[Docket No. RM95–9–003]

Open Access Same-Time Information System (OASIS) and Standards of Conduct; Order Granting Motion for Expedited Clarification

Issued September 30, 1999.

This order addresses a motion that, among other matters, seeks expedited clarification that back-up procedures are mandatory in the event of an OASIS communications equipment breakdown. As discussed below, we clarify that, during periods when an OASIS node is not in operation, transmission customers may make, and OASIS personnel shall respond to, requests for transmission service by telephone or facsimile. On restoration of the OASIS node's operations, OASIS personnel shall promptly (within one hour of restored operations) post on the OASIS: (1) All requests for service that were received during the outage; (2) whether those requests were accepted or denied; (3) which, if any, requests were made by an affiliate; and (4) the day/time when the OASIS service outage began and ended.[1] The motion is denied in all other respects.

Background

On September 3, 1999, Coral Power, L.L.C., Dynegy Power Marketing, Inc., Enron Power Marketing, Inc., and Tractabel Energy Marketing, Inc. (collectively Movants) filed a motion seeking expedited clarification that, in the event of an OASIS communications equipment malfunction, transmission providers must allow transmission customers to use certain back-up procedures. Movants request clarification that, in the event of OASIS communications breakdown, transmission provides must accept requests for transmission service made by telephone or facsimile. Movants also argue that the Commission should not limit exceptions to the OASIS-only reservation requirements to circumstances when OASIS communications are down. Finally, Movants argue that, to prevent abuse, if an affiliated customer submits a telephone or facsimile request because of a failure in OASIS connections, the affiliate customer should be required to submit a sworn affidavit of a corporate officer attesting to these facts and that this affidavit should be posted on the OASIS.

On September 20, 1999, Southern Company Services, Inc.,[2] filed an answer to Movants' motion. Southern agrees that, to the extent practicable, a transmission provider should accept telephone and facsimile reservations when its OASIS is unavailable. However, it objects to the Movants' other two proposals.

Discussion

The OASIS regulations do not contain any explicit requirement that transmission providers accept requests for transmission service by telephone or facsimile in the event that an OASIS node's communications equipment malfunctions. Nevertheless, it is preferable to have transmission providers accept transmission service requests by telephone or facsimile during such outages, rather than for them to deny all requests for service until the OASIS node's operations are restored. Accordingly, as further discussed below, we will grant Movants' motion for expedited clarification.

We believe this interpretation is entirely consistent with the primary purpose of the OASIS rules, as discussed in the RIN NOPR,[3] and as codified at 18 CFR 37.2, *i.e.*, to provide potential transmission customers with timely information that will enable them to obtain transmission service on a non-discriminatory basis.[4] This purpose is not served if a transmission provider cites our regulations as a basis for refusing requests for transmission service during an OASIS outage. The OASIS is intended to *promote* access to transmission and access to information about transmission and *not to impede* the provision of transmission service. Likewise, the requirement at 18 CFR 37.6(e)(1) that ''[a]ll requests for transmission services offered by Transmission Providers under the *pro forma* tariff must be made on the OASIS'' implicitly presupposes a functioning operational OASIS.

This is illustrated by our action in response to a request that we clarify whether the directive at 18 CFR 37.6(e)(1), that all requests for transmission services must be made on the OASIS, foreclosed the use of requests by telephone or facsimile in certain circumstances involving next-hour transactions. We responded by clarifying that,

> during Phase 1, a request for transmission service made after 2:00 p.m. of the day preceding the commencement of such service, will be ''made on the OASIS'' if it is made directly on the OASIS, or, if it is made by facsimile or telephone *and* promptly (within one hour) posted on the OASIS by the Transmission Provider. In all other circumstances, requests for transmission service must be made exclusively on the OASIS.[5]

The need for an exception to the OASIS-only reservation requirement is even stronger in the case where the OASIS node is not functioning at all.[6] We, therefore, clarify that, during periods when an OASIS node is not in operation, transmission customers may make, and OASIS personnel shall respond to, requests for transmission service by telephone or facsimile. Moreover, OASIS personnel may not deny such requests on the basis that they were made off-line.

Movants have further requested that off-line requests for transmission service be allowed not only when the OASIS node is not functioning but also when the transmission customer's OASIS communications equipment is malfunctioning. Southern responds by pointing out that the Commission specifically rejected this argument in *Carolina Power & Light Company*, 85 FERC ¶ 61,145 at 61,579 (1998). We agree and will deny Movants' request. In our view, customers should be able to make advance alternate arrangements that would allow them to avert these kinds of malfunctions of, or interruptions to, their OASIS communications. We are taking a strict position on this because it would not be possible in each instance to verify the

[1] These postings should be made in the format and location prescribed by the OASIS Standards and Communication Protocols Document (S&CP Document).

[2] On behalf of Alabama Power Company, Georgia Power Company, Gulf Power Company, Mississippi Power Company, and Savannah Electric and Power Company (collectively referred to as ''Southern Company'') (Southern).

[3] Real-Time Information Networks and Standards of Conduct, notice of proposed rulemaking, FERC Stats. & Regs. Proposed Regulations ¶ 32,516 at 33,170, 33,177 (1995).

[4] In Order No. 889, Open Access Same-time Information System (OASIS) and Standards of Conduct, FERC Stats. & Reg. ¶ 31,035 at 31,594 (1996) we stated: ''Section 37.2 sets out the fundamental purpose of this part—to ensure that all potential customers of open access transmission service have access to the information that will enable them to obtain transmission service on a non-discriminatory basis. Comments in response to the RIN NOPR did not take issue with the proposed language of § 37.2 and we are adopting this provision largely without change.'' Likewise, as noted in Order No. 889–A, Open Access Same-time Information System (OASIS) and Standards of Conduct, FERC Stats. & Regs., Regulations Preambles ¶ 31,556 (1997) the requests for rehearing did not challenge this provision.

[5] Open Access Same-time Information System (OASIS) and Standards of Conduct, clarifying order, 77 FERC ¶ 61,335 at 62,492 (1996).

[6] Similarly, the importance to the Commission of maintaining transmission business operations during emergencies is highlighted by our exception at 18 CFR 37.4(a)(2) that allows system operators to deviate from the standards of conduct, if needed to preserve system reliability during emergencies.

source of a customer's communication problems and allowing such an exception could lead to widespread circumvention of the requirement in 18 CFR 37.6(e)(2) that all requests for transmission service be made on the OASIS, in hope of obtaining preferential treatment. It also could lead to serious abuses regarding off-line communications between transmission system operations employees, and affiliated wholesale merchant employees.

To address this concern, the Movants propose that we require an affiliated customer who submits a telephone or facsimile request because of a failure in OASIS connections to submit a sworn affidavit of a corporate officer attesting to these facts and that this affidavit should be posted on the OASIS. Southern argues, to the contrary, that Order No. 889 and the Standards of Conduct were intended to apply equally to all transmission customers and were not intended to place additional burdens on affiliate customers.

In our view, the better solution for Movants' concern is to put the burden on all transmission customers to make advance alternate arrangements, and require transmission providers to take telephone and facsimile service requests only when the OASIS node itself (instead of the customer's equipment) is inoperable. Nevertheless, this proposal prompts us to add to our clarification that, on restoration of the OASIS node's operations, OASIS personnel shall promptly (within one hour of restored operations) post on the OASIS: (1) All requests for service that were received during the outage; (2) whether those requests were accepted or denied; (3) which, if any, requests were made by an affiliate; and (4) the day/time when the OASIS service outage began and ended.[7]

The Commission orders: Movants' request for expedited clarification is granted in part, and denied in part, as discussed in the body of this order.

By the Commission.

David P. Boergers,

Secretary.

[FR Doc. 99–25921 filed 10–5–99; 8:45 am]

BILLING CODE 6717–01–M

[7] *See* note 1 *Supra.*

DEPARTMENT OF ENERGY

Federal Energy Regulatory Commission

Notice of Joint Application for Approval of Transfer of License, for Conforming Amendments to Project Description and Soliciting Comments, Motions To Intervene, and Protests

September 30, 1999.

Take notice that the following application has been filed with the Commission and is available for public inspection:

a. *Application Type:* Request for Joint Approval to Transfer License and to Amend Project Boundary and Description.

b. *Project Nos.:* 2312–012 (Amendment of License) and 2312–011 (Transfer of License).

c. *Date Filed:* September 23, 1999.

d. *Applicants:* Fort James Operating Company (Fort James) and PP&L Great Works, LLC (Great Works).

e. *Name of Project:* Great Works Hydroelectric Project.

f. *Location:* The project is located on the Penobscot River near the Town of Great Works, Penobscot County, Maine.

g. *Filed Pursuant to:* Federal Power Act, 16 USC §§ 791(a), 825(r) and §§ 799 and 801.

h. *Applicant Contacts:*

For Fort James Operating Company (Transferor):

Mr. Clifford A. Cutchins, IV, Fort James Operating Company, 1650 Lake Cook Road, Deerfield, IL 60015–0089, (847) 317–5320.

James M. Costan, McGuire, Woods, Battle & Boothe LLP, 1050 Connecticut Avenue, N.W., Suite 1200, Washington, D.C. 20036, (202) 857–1754.

For PP&L Great Works, LLC (Transferee):

Robert W. Burke, Jr., PP&L Great Works, LLC, 11350 Random Hills Road, Suite 400, Fairfax, VA 22030–6044, (703) 293–2612.

H. Liza Moses, Le Boeuf, Lamb, Greene & McRae, L.L.P., 125 West 55th Street, New York, NY 10019–5389, (212) 424–8224.

i. *FERC Contact:* Any questions on this notice should be addressed to Mr. Lynn R. Miles, Sr. at (202) 219–2671, or e-mail address: lynn.miles@ferc.fed.us.

j. *Deadline for filing comments and or motions:* November 8, 1999.

All documents (original and eight copies) should be filed with: David P. Boergers, Secretary, Federal Energy Regulatory Commission, 888 First Street, N.E., Washington DC 20426.

Please include the project number (2312–011) on any comments or motions filed.

k. *Description of Request:* Fort James and Great Works request Commission authorization to transfer the Project license, FERC No. 2312, to Great Works in connection with Fort James' planned sale of its hydroelectric dam and associated structures and lands on the Penobscot River. The two parties also seek authorization to amend Exhibit K to delete lands that are not necessary and appropriate to the operation and maintenance of the Great Works Dam and to identify certain facilities within and adjacent to the powerhouse that Fort James will retain that are not necessary or appropriate to the operation and maintenance of the dam but are essential to the operation of its Old Town Paper Mill.

The transfer application was filed within five years of the expiration of the license for Project No. 2312.[1] In Hydroelectric Relicensing Regulations Under the Federal Power Act, 54 FR 23,756 (June 2, 1989); FERC Statutes and Regulations, Regulations Preambles 1986–1990 ¶ 30,854 at p. 31,438 n. 318 (May 17, 1989) (Order No. 513), the Commission declined to forbid all license transfers during the last five years of an existing license, and instead indicated that it would scrutinize all such transfer requests to determine if the transfer's primary purpose was to give the transferee an advantage in relicensing, such as when a transfer is intended to escape consideration of a transferor's poor compliance record.

l. *Locations of the Application:* A copy of the application is available for inspection and reproduction at the Commission's Public Reference Room, located at 888 First Street, NE, Room 2A, Washington, DC 20426, or by calling (202) 208–1371. This filing may be viewed on http://www.ferc.fed.us/online/rims.htm (call (202) 208–2222 for assistance). A copy is also available for inspection and reproduction at the address in item h above.

m. *Individuals desiring to be included on the Commission's mailing list should so indicate by writing to the Secretary of the Commission.*

Comments, Protests, or Motions to Intervene—Anyone may submit comments, a protest, or a motion to intervene in accordance with the requirements of rules of practice and

[1] On March 28, 1997, James River Paper Company, Inc. submitted a Notice of Intent to File Application for New License by March 31, 2000. Subsequently, an Order Amending License was issued on September 29, 1997, changing the company name from James River-Norwalk, Incorporated to Fort James Operating Company.

procedure, 18 CFR 385.210, .211, .214. In determining the appropriate action to take, the Commission will consider all protests or other comments filed, but only those who file a motion to intervene in accordance with the Commission's Rules may become a party to the proceeding. Any comments, protests, or motions to intervene must be received on or before the specified comment date for the particular application.

Filing and Service of Responsive Documents—Any filings must bear in all capital letters the title **COMMENTS**, **RECOMMENDATIONS FOR TERMS AND CONDITIONS**, PROTEST, or MOTION TO INTERVENE, as applicable, and the Project Number of the particular application to which the filing refers. Any of the above-named documents must be filed by providing the original and the number of copies provided by the Commission's regulations to: The Secretary, Federal Energy Regulatory Commission, 888 First Street, NE, Washington, DC 20426. A copy of any motion to intervene must also be served upon each representative of the Applicant specified in the particular application.

Agency Comments—Federal, state, and local agencies are invited to file comments on the described application. A copy of the application may be obtained by agencies directly from the Applicant. If an agency does not file comments within the time specified for filing comments, it will be presumed to have no comments. One copy of an agency's comments must also be sent to the Applicant's representatives.

Linwood A. Watson, Jr.,

Acting Secretary.

[FR Doc. 99–26019 Filed 10–5–99; 8:45 am]

BILLING CODE 6717–01–M

DEPARTMENT OF ENERGY

Federal Energy Regulatory Commission

Notice of Transfer of License and Soliciting Comments, Motions To Intervene, and Protests

September 30, 1999.

Take notice that the following hydroelectric application has been filed with the Commission and is available for public inspection:

a. *Application Type:* Transfer of License.

b. *Project No.:* 3131–035.

c. *Date Filed:* September 20, 1999.

d. *Applicants:* Christopher J. Kruger and Eileen J. Kruger.

e. *Name and Location of Project:* Brockways Mills Project, located on the Williams River, Windham County, in the Town of Rockingham, Vermont.

f. *Filed Pursuant to:* Federal Power Act, 16 U.S.C. 791(a)–825(r).

g. *Contacts:* Roberta Smith, Rockingham Town Manager, Town of Rockingham, P.O. Box 370, Bellows Falls, VT 05101, (802) 463–4335. For Applicant: Christopher J. Kruger and Eileen J. Kruger, P.O. Box 625, Wolfeboro Falls, NH 03896, (603) 569–6054.

h. *FERC Contact:* Heather Campbell, (202) 219–3097, or e-mail address: heather.campbell@ferc.fed.us.

i. *Deadline for filing comments and or motions:* October 30, 1999.

All documents (original and eight copies) should be filed with: David P. Boergers, Secretary, Federal Energy Regulatory Commission, 888 First Street, NE, Washington, DC 20426. Please include the Project Number (3131–035) on any comments or motions filed.

j. The transfer of the license for this project to Christopher and Eileen J. Kruger is being sought pursuant to the Interim Order on Application to Surrender License issued on March 15, 1999 (86 FERC ¶ 61,279). The March order stated the implied surrender of the project would be final unless and acceptable license transfer application was filed. This transfer will permit the Town of Rockingham the opportunity to sell the project which it owns but does not wish to operate.

k. *Locations of the Applicant:* A copy of the application is available for inspection and reproduction at the Commission's Public Reference Room, located at 888 First Street NE, Room 2A, Washington, DC, 20426, or by calling (202) 208–1371. This filing may be viewed on http://www.ferc.fed.us/online/rims.htm (call (202) 208–2222 for assistance). A copy is also available for inspection and reproduction at the addresses in item g above.

l. Individuals desiring to be included on the Commission's mailing list should so indicate by writing to the Secretary of the Commission.

Comments, Protests, or Motions to Intervene—Anyone may submit comments, a protest, or a motion to intervene in accordance with the requirements of Rules of Practice and Procedure, 18 CFR 385.210, .211 and .214. In determining the appropriate action to take, the Commission will consider all protests or other comments filed, but only those who file a motion to intervene in accordance with the Commission's Rules may become a party to the proceeding. Any comments, protests, or motions to intervene must be received on or before the specified comment date for the particular application.

Filing and Service of Responsive Documents—Any filings must bear in all capital letters the title ''COMMENTS'', ''RECOMMENDATIONS FOR TERMS AND CONDITIONS'', ''PROTEST'', OR ''MOTION TO INTERVENE'', as applicable, and the Project Number of the particular application to which the filing refers. Any of the above-named documents must be filed by providing the original and the number of copies provided by the Commission's regulations to: The Secretary at the above-mentioned address. A copy of any motion to intervene must also be served upon each representative of the Applicant specified in the particular application.

Agency Comments—Federal, state, and local agencies are invited to file comments on the described application. A copy of the application may be obtained by agencies directly from the Applicant. If an agency does not file comments within the time specified for filing comments, it will be presumed to have no comments. One copy of an agency's comments must also be sent to the Applicant's representatives.

Linwood A. Watson, Jr.,

Acting Secretary.

[FR Doc. 99–26023 Filed 10–5–99; 8:45 am]

BILLING CODE 6717–01–M

DEPARTMENT OF ENERGY

Federal Energy Regulatory Commission

[Docket No. 77–110—California Potter Valley Project]

Pacific Gas and Electric Company; Correction to Notice of Proposed Restricted Service List

September 30, 1999.

On August 24, 1999, a notice of proposed restricted service list for a memorandum of Agreement for Managing Properties Potentially Eligible for Inclusion in the National Register of Historic Places (64 FR 47188, published August 8, 1999) was issued pursuant to a license amendment proceeding for the Potter Valley Project (FERC No. 77–110). The following revision should be made:

(a) Add:

Round Valley Indian Tribes, C/O Stephen V. Quesenberry, California Indian Legal Services, 510 16th Street, Suite 301, Oakland, CA

94612.

Linwood A. Watson, Jr.,

Acting Secretary.

[FR Doc. 99–26022 Filed 10–5–99; 8:45 am]

BILLING CODE 6717–01–M

DEPARTMENT OF ENERGY

Southwestern Power Administration

Robert Douglas Willis Hydropower Project Power Rate

AGENCY: Southwestern Power Administration, DOE.

ACTION: Notice of power rate increase.

SUMMARY: The Secretary of Energy, pursuant to Sections 301(b) and 302(a) of the Department of Energy Organization Act (Pub. L. 95–91) and section 5 of the Flood Control Act of 1944 (16 U.S.C. 825s) has approved and placed into effect on an interim basis Rate Order No. SWPA–41.

SUPPLEMENTARY INFORMATION: Southwestern Power Administration (Southwestern) currently has marketing responsibility for 2.2 million kilowatts of power from 24 multiple-purpose reservoir projects, with power facilities constructed and operated by the U.S. Army Corps of Engineers, generally in all or portions of the states of Arkansas, Kansas, Louisiana, Missouri, Oklahoma and Texas. The Integrated System, comprised of 22 of the projects, is interconnected through a transmission system presently consisting of 138-kV and 161-kV high-voltage transmission lines, 69-kV transmission lines, and numerous bulk power substations and switching stations. In addition, contractual transmission arrangements provide for integration of other projects into the system.

The remaining two projects, Sam Rayburn and Robert Douglas Willis, are isolated hydraulically and electrically from the Southwestern transmission system, and their power is marketed under separate contracts through which the customer purchases the entire power output of the project at the dam. A separate Power Repayment Study (PRS) is prepared for each isolated project.

The existing rate schedule for the Robert Douglas Willis Hydropower Project was confirmed and approved on a final basis by the Federal Energy Regulatory Commission (FERC) on April 28, 1998, for the period January 1, 1998, through September 30, 2001. The FY 1999 Robert Douglas Willis Hydropower Project PRS indicates the need for a rate adjustment of $35,004 annually, or 11.6 percent.

Pursuant to implementing authority in sections 301(b) and 302(a) of the Department of Energy Organization Act (Pub. L. 95–91) and section 5 of the Flood Control Act of 1944 (16 U.S.C. 825s), the Secretary of Energy may approve the rate on an interim basis. The Administrator, Southwestern, published notice in the **Federal Register** on July 12, 1999, 64 FR 37529, announcing a 30-day period for public review and comment concerning the proposed interim rate. Written comments were accepted through August 11, 1999. In a letter dated August 10, 1999, a Sam Rayburn Municipal Power Agency (SRMPA) representative stated that SRMPA has no objection to the proposed rate extension. No other comments were received.

Information regarding this rate proposal, including studies and other supporting material, is available for public review and comment in the offices of Southwestern Power Administration, Suite 1400, One West Third Street, Tulsa, Oklahoma 74103.

Following review of Southwestern's proposal within the Department of Energy, I hereby approve on an interim basis, Rate Order No. SWPA–41, which increases the existing Robert Douglas Willis Hydropower Project Rate for the sale of power and energy to $337,932 per year for the period October 1, 1999, through September 30, 2003.

Dated: September 15, 1999.

Bill Richardson,

Secretary.

Order Confirming, Approving and Placing Increased Power Rate in Effect on an Interim Basis

October 1, 1999.

[Rate Order No. SWPA–41]

In the matter of: Southwestern Power Administration—Robert D. Willis

Pursuant to Sections 301(b) and 302(a) of the Department of Energy Organization Act, Public Law 95–91, the functions of the Secretary of the Interior and the Federal Power Commission under Section 5 of the Flood Control Act of 1944, 16 U.S.C. 825s, for the Southwestern Power Administration (Southwestern) were transferred to and vested in the Secretary of Energy. By Delegation Order No. 0204–108, effective December 14, 1983, 48 FR 55664, the Secretary of Energy delegated to the Deputy Secretary of Energy on a non-exclusive basis the authority to confirm, approve and place into effect on an interim basis power and transmission rates, and delegated to the Federal Energy Regulatory Commission (FERC) on an exclusive basis the authority to confirm, approve and place in effect on a final basis, or to disapprove power and transmission rates. Amendment No. 1 to Delegation Order No. 0204–108, effective May 30, 1986, 51 FR 19744, revised the delegation of authority to confirm, approve and place into effect on an interim basis power and transmission rates to the Under Secretary of Energy rather than the Deputy Secretary of Energy. This delegation was reassigned to the Deputy Secretary of Energy by Department of Energy (DOE) Notice 1110.29, dated October 27, 1988, and clarified by Secretary of Energy Notice SEN–10–89, dated August 3, 1989, and subsequent revisions. By Amendment No. 2 to Delegation Order No. 0204–108, effective August 23, 1991, 56 FR 41835, the Secretary of Energy revised Delegation Order No. 0204–108 to delegate to the Assistant Secretary, Conservation and Renewable Energy, the authority which was previously delegated to the Deputy Secretary in that Delegation Order. By Amendment No. 3 to Delegation Order No. 0204–108, effective November 10, 1993, 58 FR 59717, the Secretary of Energy revised the delegation of authority to confirm, approve and place into effect on an interim basis power and transmission rates by delegating that authority to the Deputy Secretary of Energy. By notice dated April 15, 1999, the Secretary of Energy rescinded the authority of the Deputy Secretary of Energy under Delegation Order 0104–108. This rate order is issued by the Secretary of Energy pursuant to Section 642 of the Department of Energy Organization Act.

Background

Dam B (Town Bluff Dam), located on the Neches River in eastern Texas downstream from the Sam Rayburn Dam, was originally constructed in 1951 by the U.S. Army Corps of Engineers (Corps) and provides streamflow regulation of releases from the Sam Rayburn Dam. The Lower Neches Valley Authority contributed funds toward construction of both projects and makes established annual payments for the right to withdraw up to 2000 cubic feet of water per second from Town Bluff Dam for its own use. Power was legislatively authorized at the project, but installation of hydroelectric facilities was deferred until justified by economic conditions. A determination of feasibility was made in a 1982 Corps study. In 1983 the Sam Rayburn Municipal Power Agency (SRMPA) proposed to sponsor and finance the development of hydropower at Town

Bluff Dam in return for the output of the project to be delivered to its member municipalities and participating member cooperatives of the Sam Rayburn Dam Electric Cooperative. Since the hydroelectric facilities at the Town Bluff Dam have been completed, the facilities have been renamed the Robert Douglas Willis Hydropower Project (Robert D. Willis).

The Robert D. Willis rate is unique in that it excludes the costs associated with the hydropower design and construction performed by the Corps, because all funds for these costs were provided by SRMPA. Under the Southwestern/SRMPA power sales Contract No. DE–PM75–85SW00117, SRMPA will continue to pay all annual operating and marketing costs, as well as expected capital replacement costs, through the rate paid to Southwestern, and will receive all power and energy produced at the project for a period of 50 years.

Discussion

The 1999 Current Robert D. Willis Power Repayment Study (PRS) tests the adequacy of the existing rate based on the evaluation period extending from FY 1999 through FY 2003, to recover annual expenses for marketing, operation and maintenance, and to amortize additions to plant and major replacements of the generating facilities. Since the project's design and construction were financed in their entirety by SRMPA, no component for amortization of the original investment of some $18 million is included in the rate determination. The Current PRS for the Robert D. Willis project, using the existing annual rate of $302,928, indicates that the legal requirements to repay all costs will not be met and an increase in revenue is necessary.

The additional revenue needed is, in part, a result of the increase in replacement costs required to be recovered. In addition, the Corps had projected a significant increase in its estimates of large maintenance items included in the operations and maintenance (O&M) costs for the Robert D. Willis project.

The existing annual Robert D. Willis project power rate of $302,928 was confirmed and approved on a final basis by the FERC on April 28, 1998, for the period January 1, 1998, through September 30, 2001. The 1999 Robert D. Willis Current Power Repayment Study (PRS) indicates that the present rate does not meet the cost recovery criteria for the isolated project. Over the entire repayment period the current rate will underpay requirements by $9,840,156. The 1999 Robert D. Willis Revised PRS indicates that an annual rate of $337,932 will satisfy repayment criteria in accordance with Department of Energy Order No. RA 6120.2 and Section 5 of the Flood Control Act of 1944. The proposed increase in revenue amounts to $35,004 or 11.6 percent annually to begin October 1, 1999.

Pursuant to Title 10, Part 903, Subpart A of the Code of Federal Regulations (10 CFR 903), ''Procedures for Public Participation in Power and Transmission Rate Adjustments and Extensions'', 50 FR 37837, the Administrator, Southwestern, published notice in the **Federal Register** (64 FR 37529), on July 12, 1999, announcing a 30-day period for public review and comment. Southwestern held informal meetings and a Public Information Forum on July 20, 1999, where Southwestern provided copies of supporting data for the 1999 Robert D. Willis PRS to interested parties. A letter was received on behalf of SRMPA, indicating no opposition to the proposed rate increase. Southwestern did not receive any request to convene a formal Public Comment Forum and, as a result, did not convene such a meeting. Information regarding this rate proposal, including studies, comments and other supporting material, is available for public review and comment in the offices of the Southwestern Power Administration, One West Third Street, Tulsa, Oklahoma 74103.

Administrator's Certification

The 1999 Revised Robert D. Willis PRS indicates that the annual power rate of $337,932 will repay all costs of the project including amortization of additions to plant and major replacements of the generating facilities consistent with provisions of DOE Order No. RA 6120.2. In accordance with Section 1 of Delegation Order No. 0204–108, as amended November 10, 1993, 58 FR 59717, and Section 5 of the Flood Control Act of 1944, the Administrator has determined that the proposed Robert D. Willis power rate is consistent with applicable law and is the lowest possible rate consistent with sound business principles.

Environment

The environmental impact of the rate increase proposal was evaluated in consideration of DOE's guidelines for implementing the procedural provisions of the National Environmental Policy Act and was determined to fall within the class of actions that are categorically excluded from the requirements of preparing either an Environmental Impact Statement or an Environmental Assessment.

Order

In view of the foregoing and pursuant to authority vested in me, I hereby confirm, approve and place in effect on an interim basis, effective October 1, 1999, the proposed annual rate of $337,932 for the sale of power and energy from the Robert D. Willis project to the Sam Rayburn Municipal Power Agency, under Contract No. DE–PM75–85SW00117, as amended. The rate shall remain in effect on an interim basis through September 30, 2003, or until the FERC confirms and approves the rate on a final basis.

Dated: September 15,1999.

Bill Richardson,

Secretary.

[FR Doc. 99–26029 Filed 10–5–99; 8:45 am]

BILLING CODE 6450–01–P

DEPARTMENT OF ENERGY

Southwestern Power Administration

Sam Rayburn Dam Project Power Rate

AGENCY: Southwestern Power Administration, DOE.

ACTION: Notice of power rate extension.

SUMMARY: The Secretary of Energy, acting under the authorities as implemented in 10 CFR 903.22(h) and 903.23(a)(3), has approved and placed into effect on an interim basis Rate Order No. SWPA–40.

SUPPLEMENTARY INFORMATION: Southwestern Power Administration (Southwestern) currently markets 2.2 million kilowatts of power from 24 multiple-purpose reservoir projects, in all or portions of the states of Arkansas, Kansas, Louisiana, Missouri, Oklahoma and Texas, with power facilities constructed and operated by the U.S. Army Corps of Engineers. The Integrated System, comprised of 22 of the projects, is interconnected through a transmission system presently consisting of 138-kV and 161-kV high-voltage transmission lines, 69-kV transmission lines, and numerous bulk power substations and switching stations. In addition, contractual transmission arrangements provide for integration of other projects into the system.

The remaining two projects, Sam Rayburn Dam and Robert Douglas Willis, are isolated hydraulically and electrically from the Southwestern transmission system, and their power is marketed under separate contracts through which the customer purchases

the entire power output of the project at the dam. A separate Power Repayment Study (PRS) is prepared for each isolated project.

The existing rate schedule for the Sam Rayburn Dam Project was confirmed and approved on a final basis by the Federal Energy Regulatory Commission (FERC) on December 7, 1994, for the period October 1, 1994, through September 30, 1998. The Deputy Secretary of Energy extended the existing rate schedule for a one year period, through September 30, 1999. The FY 1999 Sam Rayburn Dam Project PRS indicates the need for a rate adjustment of $4,692 annually, or 0.2 percent.

Pursuant to implementing authority in 10 CFR 903.22(h) and 903.23(a)(3), the Secretary of Energy may extend a FERC-approved rate on an interim basis. The Southwestern Administrator, published notice in the **Federal Register** on June 29, 1999, 64 FR 34797, announcing a 30-day period for public review and comment concerning the proposed interim rate extension. Written comments were accepted through July 29, 1999. In a letter dated July 27, 1999, a Sam Rayburn Dam Electric Cooperative (SRDEC) official stated that SRDEC has no objection to the proposed rate extension. No other comments were received.

Discussion

The existing Sam Rayburn Dam Project rate is based on the FY 1994 PRS. PRSs have been completed on the Sam Rayburn Dam Project each year since approval of the existing rates. Rate changes identified by the PRSs since that period have indicated the need for minimal rate increases or decreases. Since the revenue changes reflected by the PRSs were within the plus-or-minus two percent Rate Adjustment Threshold established by Southwestern's Administrator on June 23, 1987, these rate adjustments were deferred in the best interest of the government and provided for the next year's PRS to determine the appropriate level of revenues needed for the next rate period.

The FY 1999 PRS indicates the need for an annual revenue increase of 0.2 percent. As has been the case since the existing rate was approved, the FY 1999 rate adjustment falls within Southwestern's plus-or-minus two percent Rate Adjustment Threshold and would normally be deferred. However, the existing rate expires on September 30, 1999. Consequently, Southwestern proposes to extend the existing rate for a one-year period ending September 30, 2000, on an interim basis under the implementation authorities noted in 10 CFR 903.22(h) and 903.23(a)(3).

Southwestern continues to make significant progress toward repayment of the Federal investment in the Sam Rayburn Dam Project. Through FY 1998, cumulative amortization for the Sam Rayburn Dam Project was $12,339,699, which represents approximately 48 percent of the $25,734,878 Federal investment. Repayment has increased almost 34 percent since the existing rate was placed in effect.

Information regarding this rate extension, including studies and other supporting material, is available for public review and comment in the offices of Southwestern Power Administration, Suite 1400, One West Third Street, Tulsa, Oklahoma 74103.

Order

In view of the foregoing and pursuant to the authorities granted in 10 CFR 903.22(h) and 903.23(a)(3), I hereby extend on an interim basis, for the period of one year, effective October 1, 1999, the current FERC-approved Sam Rayburn Dam Project rate for the sale of power and energy.

Dated: September 15, 1999.

Bill Richardson,

Secretary.

[Rate Order No. SWPA–40]

Order Approving Extension of Power Rate on an Interim Basis

October 1, 1999.

In the matter of: Southwestern Power Administration—Sam Rayburn Dam Project Rate .

Pursuant to Sections 302(a) and 301(b) of the Department of Energy Organization Act, Pub. L. 95–91, the functions of the Secretary of the Interior and the Federal Power Commission under Section 5 of the Flood Control Act of 1944, 16 U.S.C. 825s, for the Southwestern Power Administration (Southwestern) were transferred to and vested in the Secretary of Energy. By Delegation Order No. 0204–108, effective December 14, 1983, 48 FR 55664, the Secretary of Energy delegated to the Deputy Secretary of Energy on a non-exclusive basis the authority to confirm, approve and place into effect on an interim basis power and transmission rates, and delegated to the Federal Energy Regulatory Commission (FERC) on an exclusive basis the authority to confirm, approve and place in effect on a final basis, or to disapprove power and transmission rates. Amendment No. 1 to Delegation Order No. 0204–108, effective May 30, 1986, 51 FR 19744, revised the delegation of authority to confirm, approve and place into effect on an interim basis power and transmission rates by delegating such authority to the Under Secretary of Energy rather than the Deputy Secretary of Energy. This delegation was reassigned to the Deputy Secretary of Energy by Department of Energy (DOE) Notice 1110.29, dated October 27, 1988, and clarified by Secretary of Energy Notice SEN–10–89, dated August 3, 1989, and subsequent revisions. By Amendment No. 2 to Delegation Order No. 0204–108, effective August 23, 1991, 56 FR 41835, the Secretary of the Department of Energy revised Delegation Order No. 0204–108 to delegate to the Assistant Secretary, Conservation and Renewable Energy, the authority which was previously delegated to the Deputy Secretary in that Delegation Order. By Amendment No. 3 to Delegation Order No. 0204–108, effective November 10, 1993, the Secretary of Energy re-delegated to the Deputy Secretary of Energy, the authority to confirm, approve and place into effect on an interim basis power and transmission rates of the Power Marketing Administrations. By notice dated April 15, 1999, the Secretary of Energy rescinded the authority of the Deputy Secretary of Energy under Delegation Order 0204–108. This rate order is issued by the Secretary of Energy pursuant to Section 642 of the Department of Energy Organization Act.

This is an interim rate extension. It is made pursuant to the authorities as implemented in 10 CFR 903.22(h) and 903.23(a)(3).

Background

Southwestern currently markets for 2.2 million kilowatts of power from 24 multiple-purpose reservoir projects, in the states of Arkansas, Kansas, Louisiana, Missouri, Oklahoma and Texas, with power facilities constructed and operated by the U.S. Army Corps of Engineers. The Integrated System, comprised of 22 of the projects, is interconnected through a transmission system presently consisting of 138-kV and 161-kV high-voltage transmission lines, 69-kV transmission lines, and numerous bulk power substations and switching stations. In addition, contractual transmission arrangements provide for integration of other projects into the system.

The remaining two projects, Sam Rayburn Dam and Robert Douglas Willis, are isolated hydraulically and electrically from the Southwestern transmission system, and their power is marketed under separate contracts through which the customer purchases the entire power output of the project at

the dam. A separate Power Repayment Study (PRS) is prepared for each isolated project.

The existing rate schedule for the Sam Rayburn Dam Project was confirmed and approved on a final basis by the FERC on December 7, 1994, for the period October 1, 1994, through September 30, 1998. The rate was extended on an interim basis by the Deputy Secretary of Energy, who had authority at that time pursuant to Delegation Order 0204–108, for a one-year period, October 1, 1998, through September 30, 1999. The FY 1999 Sam Rayburn Dam Project PRS indicates the need for a rate adjustment of $4,692 annually, or 0.2 percent.

Pursuant to implementing authority in 10 CFR 903.22(h) and 903.23(a)(3), the Secretary of Energy may extend a FERC-approved rate on an interim basis. The Southwestern Administrator, published notice in the **Federal Register** on June 29, 1999, 64 FR 34797, announcing a 30-day period for public review and comment concerning the proposed interim rate extension. In addition, an informal meeting was held with customer representatives in April 1999. Written comments were accepted through July 29, 1999. One comment was received. This comment stated no objection to the proposed interim extension.

Discussion

The existing Sam Rayburn Dam Project rate is based on the FY 1994 PRS. PRSs have been completed on the Sam Rayburn Dam Project each year since approval of the existing rates. Rate changes identified by the PRSs since that period have indicated the need for minimal rate increases or decreases. Since the revenue changes reflected by the PRSs were within the plus-or-minus two percent Rate Adjustment Threshold established by Southwestern's Administrator on June 23, 1987, these rate adjustments were deferred in the best interest of the government and provided for the next year's PRS to determine the appropriate level of revenues needed for the next rate period.

The FY 1999 PRS indicates the need for an annual revenue increase of $4,692 (0.2 percent). As has been the case since the existing rate was approved, the FY 1999 rate adjustment falls within Southwestern's plus-or-minus two percent Rate Adjustment Threshold and would normally be deferred. However, the existing rate expires on September 30, 1999. Consequently, Southwestern proposes to extend the existing rate for a one-year period ending September 30, 2000, on an interim basis under the implementation authorities noted in 10 CFR 903.22(h) and 903.23(a)(3).

Southwestern continues to make significant progress toward repayment of the Federal investment in the Sam Rayburn Dam Project. Through FY 1998, cumulative amortization for the Sam Rayburn Dam Project was $12,339,699, which represents approximately 48 percent of the $25,734,878 Federal investment for the Sam Rayburn Dam Project. The cumulative amortization has increased almost 34 percent since the existing rate was placed in effect.

Information regarding this rate extension, including studies and other supporting material, is available for public review and comment in the offices of Southwestern Power Administration, One West Third Street, Tulsa, Oklahoma 74101.

Order

In view of the foregoing and pursuant to the authority delegated to me in 10 CFR part 903, I hereby extend on an interim basis, for the period of one year, effective October 1, 1999, the current FERC-approved Sam Rayburn Dam Project rate for the sale of power.

Dated: September 15, 1999.

Bill Richardson,

Secretary.

[FR Doc. 99–26028 Filed 10–5–99; 8:45 am]

BILLING CODE 6450–01–P

ENVIRONMENTAL PROTECTION AGENCY

[FRL–6452–5]

Agency Information Collection Activities, OMB Responses

AGENCY: Environmental Protection Agency (EPA).

ACTION: Notices.

SUMMARY: This document announces the Office of Management and Budget's (OMB) responses to Agency clearance requests, in compliance with the Paperwork Reduction Act (44 U.S.C. 3501 *et seq.*). An agency may not conduct or sponsor, and a person is not required to respond to, a collection of information unless it displays a currently valid OMB control number. The OMB control numbers for EPA's regulations are listed in 40 CFR part 9 and 48 CFR Chapter 15.

FOR FURTHER INFORMATION CONTACT: Sandy Farmer at (202) 260–2740, or E-mail at ''farmer.sandy@epa.gov'', and please refer to the appropriate EPA Information Collection Request (ICR) Number.

SUPPLEMENTARY INFORMATION:

OMB Responses to Agency Clearance Requests

OMB Approvals

EPA ICR No. 1031.06; Recordkeeping and Reporting Requirements for Allegations of Significant Adverse Reactions to Human Health or the Environment—TSCA Section 8(c) Health and Safety Data Reporting Rule; in 40 CFR part 717; was approved 08/23/99; OMB no. 2070–0017; expires 08/31/2002.

EPA ICR No. 1188.06; Significant New Use Rules for Existing Chemicals—TSCA Section 5(a); in 40 CFR part 721; was approved 08/23/99; OMB No. 2070–0038; expires 08/31/2002.

EPA ICR No. 0595.07; Notice of Pesticide Registration by States to Meet a Special Local Need—Section 24(c); in 40 CFR part 162; was approved 08/24/99; OMB No. 2070–0055; expires 08/31/2002.

EPA ICR No. 0601.06; FIFRA Section 29 Annual Report on Conditional Registration; in 40 CFR part 152; was approved 08/24/99; OMB No. 2070–0026; expires 08/31/2002.

EPA ICR No. 0662.06; NSPS for VOC Equipment Leaks in the Synthetic Organic Chemical Industry (SOCMI); in 40 CFR part 60, subpart VV, was approved 08/25/99; OMB No. 2060–0012; expires 08/31/2002.

EPA ICR No. 0940.16; Ambient Air Quality Surveillance; in 40 CFR part 58; was approved 09/02/99; OMB No. 2060–0084; expires 09/30/2002.

EPA ICR No. 1813.02; Final Regional Haze Rule; in 40 CFR part 51; was approved 09/03/99; OMB No. 2060–0421; expires 09/30/2002.

EPA ICR No. 1557.04; NSPS for Municipal Solid Waste Landfills; in 40 CFR part 60, subpart WWW; was approved 9/10/99; OMB No. 2060–0220; expires 09/30/2002.

EPA ICR No. 1150.05; NSPS for Volatile Organic Compound Emissions from the Polymer Manufacturing Industry; in 40 CFR part 60, subpart DDD; was approved 09/13/99; OMB No. 2060–0145; expires 09/30/2002.

EPA ICR No. 1069.06; NSPS for Primary and Secondary Emissions From Basic Oxygen Process Furnaces; in 40 CFR part 60, subpart N and Na; was approved 09/13/99; OMB No. 2060–0029; expires 09/30/2002.

EPA ICR No. 1699.02; Reporting and Recordkeeping Requirements for Generators of Hazardous Waste Lamps; in 40 CFR part 273 and 40 CFR parts 264–70 and 124; was approved 09/24/99; OMB No. 2050–0164; expires 09/30/2002.

Extensions of Expiration Dates

EPA ICR No. 0649.06; NSPS for Metal Furniture Coating; in 40 CFR part 60, subpart EE, OMB No. 2006–0106; on 8/20/99 OMB extended the expiration date through 11/30/99.

EPA ICR No. 1167.05; NSPS for Lime manufacturing; in 40 CFR part 60, subpart HH; OMB No. 2060–0063; on 8/20/99 OMB extended the expiration date through 12/31/99.

EPA ICR No. 0113.06; NESHAP for Mercury; in 40 CFR part 61, subpart E; OMB No. 2060–0097; on 08/20/99 extended the expiration date through 01/31/2000.

EPA ICR No. 1088.08; NSPS for Industrial-Commercial-Institutional Steam Generating Units; in 40 CFR part 60, subpart Db; OMB No. 2060–0072; on 08/20/99 OMB extended the expiration date through 12/31/99.

EPA ICR No. 0998.05; NSPS for SOCMI Air Oxidation and Distillation Processes; in 40 CFR part 60, subpart III and NNN; OMB No. 2060–0197; on 08/20/99 OMB extended the expiration date through 12/31/99.

EPA ICR No. 1678.04; NESHAP for Aerospace Manufacturing and Rework Operations; in 40 CFR part 63, subpart EE; OMB No. 2060–0314; on 08/20/99 OMB extended the expiration date through 12/31/99.

EPA ICR No. 0116.05; Emission Control System Performance Warranty Regulations and Voluntary Aftermarket Part Certification Program; in 40 CFR part 85.2112; OMB No. 2060–0060; on 08/25/99 OMB extended the expiration date through 02/28/2000.

EPA ICR No. 0011.09; Selective Enforcement Auditing and Recordkeeping Requirements for On-Highway HDE, Non-Road Compression Ignition Engines, and On-Highway Light-Duty Vehicles and Light-Duty Trucks; in 40 CFR part 86, subparts G and K and, part 90, subpart F; OMB No. 2060–0064; on 08/25/99 OMB extended the expiration date through 02/28/2000.

EPA ICR No. 0168.06; National Pollutant Discharge Elimination System and Sewage Sludge Management State Programs; in 40 CFR parts 123 and 501; OMB No. 2040–0057; on 08/26/99 OMB extended the expiration date through 11/30/99.

EPA ICR No 1541.05; NESHAP for Benzene Waste Operations; in 40 CFR part 61, subpart FF, OMB No. 2060–0183; on 09/09/99 OMB extended the expiration date through 12/31/99.

EPA ICR No. 0111.08; National Emission Standards for Asbestos; in 40 CFR part 61, subpart M; OMB No. 2060–0101; on 09/09/99 OMB extended the expiration date through 12/31/99.

EPA ICR No. 0663.06; NSPS for Beverage Can Surface Coating; in 40 CFR part 60, subpart WW; OMB No. 2060–0001; on 09/10/99 OMB extended the expiration date through 01/31/2000.

EPA ICR No. 0660.06; NSPS for Metal Coil Surface Coating Operations; in 40 CFR part 60, subpart TT; OMB No. 2060–0107; on 09/10/99 OMB extended the expiration date through 12/31/99.

IPA ICR NO. 1178.04; NSPS for Synthetic Organic Chemical Manufacturing Industry (SOCMI) Reactor Processes; in 40 CFR part 60, subpart RRR; OMB No. 2060–0269; on 09/10/99 OMB extended the expiration date through 01/31/2000.

EPA ICR No. 1052.05; NSPS for Fossil-Fuel-Fired Steam Generating Units; in 40 CFR part 60, subpart D; OMB No. 2060–0026; on 09/14/99 OMB extended the expiration date through 01/31/2000.

EPA ICR No. 1127.05; NSPS For Hot Mix Asphalt Facilities; in 40 CFR part 60, subpart I; OMB No. 2060–0083; on 09/14/99 OMB extended the expiration date through 01/31/2000.

EPA ICR No. 1717.02; NESHAP for Air Pollutants for Off-Site Waste and Recovery Operations; in 40 CFR part 63, subpart DD; OMB No. 2060–0313; on 09/15/99 OMB extended the expiration date through 03/31/2000.

EPA ICR No. 1055.05; NSPS for Kraft Pulp Mills; in 40 CFR part 60, subpart BB; OMB No. 2060–0021; on 09/17/99 OMB extended the expiration date through 01/31/2000.

EPA ICR No. 0658.06; NSPS for Pressure Sensitive Tape and Label Surface Coating; in 40 CFR part 60, subpart RR; OMB No. 2060–0004; on 09/17/99 OMB extended the expiration date through 01/31/2000.

EPA ICR No. 1053.05; NSPS for Electric Utility Steam Generating Units; in 40 CFR part 60, subpart Da; OMB No. 2060–0023; on 09/17/99 OMB extended the expiration date through 01/31/2000.

EPA ICR No. 1084–05; Amendments to NSPS to Nonmetallic Mineral Processing Plants; in 40 CFR part 60, subpart OOO; OMB No. 2060–0050; on 09/17/99 OMB extended the expiration date through 03/31/2000.

EPA ICR No. 1763.01; In-Use Credit Program and New Marine Engines; in 40 CFR part 91, subpart N; OMB No. 2060–0352; on 09/24/99 OMB extended the expiration date through 03/31/2000.

EPA ICR No. 1774.01; EPA's Mobile Air Conditioner Retrofitting Program; in 40 CFR 82.180; OMB No. 2060–0350; on 09/24/99 OMB extended the expiration date through 02/28/2000.

EPA ICR No. 0002.08; National Pretreatment Program; in 40 CFR part 403; OMB No. 2040–0009; on 09/20/99 OMB extended the expiration date through 11/30/99.

EPA ICR No. 0226.14; National Pollutant Elimination System Permit Application—Forms 2A and 2S (Final Rule); in 40 CFR parts 122 and 501; OMB No. 2040–0086; on 09/20/99 OMB extended the expiration date through 11/30/99.

EPA ICR No. 1427.05; National Pollutant Discharge Elimination System (NPDES) Compliance Assessment/Certification Information; in 40 CFR parts 122 and 501; OMB No. 2040–0110; on 09/21/99 OMB extended the expiration date through 03/31/2000.

EPA ICR No. 1711.02; Voluntary Customer Service Satisfactory Surveys; OMB No. 2090–0010; on 09/17/99 OMB extended the expiration date through 11/30/99.

EPA ICR No. 0994.06; Beach Closing Survey Report on the Great Lakes; OMB No. 2090–0003; on 09–21/99 OMB extended the expiration date through 03/31/2000.

EPA ICR No. 1139.05; TSCA Section 4 Test Rules, Consent Orders and Test Rule Exemptions; in 40 CFR part 790; OMB No. 2070–0033; on 09/28/99 OMB extended the expiration date through 2/28/2000.

Action Withdrawn and Continued

EPA ICR No. 1656.07; Requirements for Registration and Documentation of Risk Management Plans under section 112(r) of the Clean Air Act; OMB No. 2050–00144; and 09/17/99 this action was withdrawn and continued.

Dated: September 29, 1999.

Richard T. Westlund,

Acting Division Director, Regulatory Information Division.

[FR Doc. 99–26067 Filed 10–5–99; 8:45 am]

BILLING CODE 6560–50–M

ENVIRONMENTAL PROTECTION AGENCY

[OPP–34202; FRL–6387–9]

Organophosphate Pesticide; Availability of Preliminary Risk Assessments

AGENCY: Environmental Protection Agency (EPA).

ACTION: Notice.

SUMMARY: This notice announces the availability of documents that were developed as part of the EPA's process for making reregistration eligibility decisions for the organophosphate pesticides and for tolerance reassessments consistent with the Federal Food, Drug, and Cosmetic Act

(FFDCA), as amended by the Food Quality Protection Act of 1996 (FQPA). These documents are the preliminary human health risk assessments and related documents for chlorpyrifos methyl. This notice also starts a 60-day public comment period for the preliminary risk assessments. Comments are to be limited to issues directly associated with the one organophosphate pesticide that has the risk assessments placed in the docket and should be limited to issues raised in those documents. By allowing access and opportunity for comment on the preliminary risk assessments, EPA is seeking to strengthen stakeholder involvement and help ensure our decisions under FQPA are transparent and based on the best available information. The tolerance reassessment process will ensure that the United States continues to have the safest and most abundant food supply. The Agency cautions that these risk assessments are preliminary assessments only and that further refinements of the risk assessments will be appropriate for some, if not all, of these organophosphate pesticides. These documents reflect only the work and analysis conducted as of the time they were produced and it is appropriate that, as new information becomes available and/or additional analyses are performed, the conclusions they contain may change.

DATES: Comments, identified by the docket control number OPP–34202, must be received on or before December 6, 1999.

ADDRESSES: Comments may be submitted by mail, electronically, or in person. Please follow the detailed instructions for each method as provided in Unit I. of the ''SUPPLEMENTARY INFORMATION.'' To ensure proper receipt by EPA, it is imperative that you identify the docket control number in the subject line on the first page of your response.

FOR FURTHER INFORMATION CONTACT: Karen Angulo, Special Review and Reregistration Division (7508C), Office of Pesticide Programs, Environmental Protection Agency, 401 M St., SW., Washington, DC 20460; telephone number: (703) 308–8004; and e-mail address: angulo.karen@epa.gov.

SUPPLEMENTARY INFORMATION:

I. General Information

A. Does this Action Apply to Me?

This action is directed to the public in general, nevertheless, a wide range of stakeholders will be interested in obtaining the revised risk assessments and submitting risk management comments on chlorpyrifos methyl, including environmental, human health, and agricultural advocates; the chemical industry; pesticide users; and members of the public interested in the use of pesticides on food. Since other entities may also be interested, the Agency has not attempted to describe all the specific entities that may be affected by this action. If you have any questions regarding the applicability of this action to a particular entity, consult the person listed under ''FOR FURTHER INFORMATION CONTACT.''

B. How Can I Get Additional Information, Including Copies of this Document and Other Related Documents?

1. *Electronically*. You may obtain electronic copies of this document, and certain other related documents that might be available electronically, from the EPA Internet Home Page at http://www.epa.gov/. On the Home Page select ''Laws and Regulations'' and then look up the entry for this document under the ''**Federal Register**—Environmental Documents.'' You can also go directly to the **Federal Register** listings at http://www.epa.gov/fedrgstr/. In addition, copies of the preliminary risk assessments for the one organophosphate pesticide may also be accessed at http: www.epa.gov/oppsrrd1/op.

2. *In person*. The Agency has established an official record for this action under docket control number OPP–34202. The official record consists of the documents specifically referenced in this action, and other information related to this action, including any information claimed as Confidential Business Information (CBI). This official record includes the documents that are physically located in the docket, as well as the documents that are referenced in those documents. The public version of the official record does not include any information claimed as CBI. The public version of the official record, which includes printed, paper versions of any electronic comments submitted during an applicable comment period is available for inspection in the Public Information and Records Integrity Branch (PIRIB), Rm. 119, Crystal Mall #2, 1921 Jefferson Davis Hwy., Arlington, VA, from 8:30 a.m. to 4 p.m., Monday through Friday, excluding legal holidays. The PIRIB telephone number is (703) 305–5805.

C. How and to Whom Do I Submit Comments?

You may submit comments through the mail, in person, or electronically. To ensure proper receipt by EPA, it is imperative that you identify the docket control number in the subject line on the first page of your response.

1. *By mail*. Submit your comments to: Public Information and Records Integrity Branch (PIRIB), Information Resources and Services Division (7502C), Office of Pesticide Programs (OPP), Environmental Protection Agency, 401 M St., SW., Washington, DC 20460.

2. *In person or by courier*. Deliver your comments to: Public Information and Records Integrity Branch (PIRIB), Information Resources and Services Division (7502C), Office of Pesticide Programs (OPP), Environmental Protection Agency, Rm. 119, Crystal Mall #2, 1921 Jefferson Davis Hwy., Arlington, VA. The PIRIB is open from 8:30 a.m. to 4 p.m., Monday through Friday, excluding legal holidays. The PIRIB telephone number is (703) 305–5805.

3. *Electronically*. You may submit your comments electronically by e-mail to: ''opp-docket@epa.gov,'' or you can submit a computer disk as described above. Do not submit any information electronically that you consider to be CBI. Avoid the use of special characters and any form of encryption. Electronic submissions will be accepted in Wordperfect 6.1/8.0 or ASCII file format. All comments in electronic form must be identified by docket control number OPP–34202. Electronic comments may also be filed online at many Federal Depository Libraries.

D. How Should I Handle CBI that I Want to Submit to the Agency?

Do not submit any information electronically that you consider to be CBI. You may claim information that you submit to EPA in response to this document as CBI by marking any part or all of that information as CBI. Information so marked will not be disclosed except in accordance with procedures set forth in 40 CFR part 2. In addition to one complete version of the comment that includes any information claimed as CBI, a copy of the comment that does not contain the information claimed as CBI must be submitted for inclusion in the public version of the official record. Information not marked confidential will be included in the public version of the official record without prior notice. If you have any questions about CBI or the procedures for claiming CBI, please consult the person listed under ''FOR FURTHER INFORMATION CONTACT.''

E. What Should I Consider as I Prepare My Comments for EPA?

You may find the following suggestions helpful for preparing your comments:

1. Explain your views as clearly as possible.
2. Describe any assumptions that you used.
3. Provide copies of any technical information and/or data you used that support your views.
4. If you estimate potential burden or costs, explain how you arrived at the estimate that you provide.
5. Provide specific examples to illustrate your concerns.
6. Offer alternative ways to improve the notice.
7. Make sure to submit your comments by the deadline in this document.
8. To ensure proper receipt by EPA, be sure to identify the docket control number assigned to this action in the subject line on the first page of your response. You may also provide the name, date, and **Federal Register** citation.

II. Background

EPA is making available preliminary risk assessments that have been developed as part of EPA's process for making reregistration eligibility decisions for the organophosphate pesticides and for tolerance reassessments consistent with the FFDCA, as amended by the FQPA. The Agency's preliminary human health risk assessments for one organophosphate pesticides are available in the individual organophosphate pesticide docket: Chlorpyrifos methyl.

Included in the individual organophosphate pesticide docket is the Agency's preliminary risk assessments. As additional comments, reviews, and risk assessment modifications become available, these will also be docketed for the one organophosphate pesticide listed in this notice. The Agency cautions that these risk assessments are preliminary assessments only and that further refinements of the risk assessments will be appropriate for the one organophosphate pesticide. These documents reflect only the work and analysis conducted as of the time they were produced and it is appropriate that, as new information becomes available and/or additional analyses are performed, the conclusions they contain may change.

As the preliminary risk assessments for the remaining organophosphate pesticides are completed and registrants are given a 30-day review period to identify possible computational or other clear errors in the risk assessment, these risk assessments and registrant responses will be placed in the individual organophosphate pesticide dockets. A notice of availability for subsequent assessments will appear in the **Federal Register.**

The Agency is providing an opportunity, through this notice, for interested parties to provide comments and input to the Agency on the preliminary risk assessments for the chemicals specified in this notice. Such comments and input could address, for example, the availability of additional data to further refine the risk assessments, such as percent crop treated information or submission of residue data from food processing studies, or could address the Agency's risk assessment methodologies and assumptions as applied to these specific chemicals. Comments should be limited to issues raised within the preliminary risk assessments and associated documents. EPA will provide other opportunities for public comment on other science issues associated with the organophosphate tolerance reassessment program. Failure to comment on any such issues as part of this opportunity will in no way prejudice or limit a commenter's opportunity to participate fully in later notice and comment processes. All comments should be submitted by December 6, 1999, using the methods in Unit I. of the ''SUPPLEMENTARY INFORMATION.'' Comments will become part of the Agency record for each individual organophosphate pesticide to which they pertain.

List of Subjects

Environmental protection, Chemicals, Pesticides and pests.

Dated: September 30, 1999.

Lois Rossi,

Director, Special Review and Reregistration Division, Office of Pesticide Programs.

[FR Doc. 99–26072 Filed 10–5–99; 8:45 am]

BILLING CODE 6560–50–F

ENVIRONMENTAL PROTECTION AGENCY

[OPP–34201; FRL–6387–6]

Organophosphate Pesticides; Availability of Revised Risk Assessments

AGENCY: Environmental Protection Agency (EPA).

ACTION: Notice.

SUMMARY: This notices announces the availability of the revised risk assessments and related documents for two organophosphate pesticides, naled and temephos. In addition, this notice starts a 60-day public participation period during which the public is encouraged to submit risk management ideas or proposals. These actions are in response to a joint initiative between EPA and the Department of Agriculture (USDA) to increase transparency in the tolerance reassessment process for organophosphate pesticides.

DATES: Comments, identified by docket control number OPP–3434136A for naled and OPP–34147B for temephos, must be received by EPA on or before December 6, 1999.

ADDRESSES: Comments may be submitted by mail, electronically, or in person. Please follow the detailed instructions for each method as provided in Unit III. of the ''SUPPLEMENTARY INFORMATION.'' To ensure proper receipt by EPA, it is imperative that you identify docket control number OPP–34136A for naled and OPP–34147B for temephos in the subject line on the first page of your response.

FOR FURTHER INFORMATION CONTACT: Karen Angulo, Special Review and Reregistration Division (7508C), Office of Pesticide Programs, Environmental Protection Agency, 401 M St., SW., Washington, DC 20460; telephone number: (703) 308–8004; e-mail address: angulo.karen@epa.gov.

SUPPLEMENTARY INFORMATION:

I. Does this Action Apply to Me?

This action is directed to the public in general, nevertheless, a wide range of stakeholders will be interested in obtaining the revised risk assessments and submitting risk management comments on naled and temephos, including environmental, human health, and agricultural advocates; the chemical industry; pesticide users; and members of the public interested in the use of pesticides on food. As such, the Agency has not attempted to specifically describe all the entities potentially affected by this action. If you have any questions regarding the applicability of this action to a particular entity, consult the person listed under ''FOR FURTHER INFORMATION CONTACT.''

II. How Can I Get Additional Information, Including Copies of this Document or Other Related Documents?

A. *Electronically.* You may obtain electronic copies of this document and other related documents from the EPA Internet Home Page at http://

www.epa.gov/. To access this document, on the Home Page select ''Laws and Regulations'' and then look up the entry for this document under the ''**Federal Register**—Environmental Documents.'' You can also go directly to the **Federal Register** listings at http://www.epa.gov/fedrgstr/.

To access information about organophosphate pesticides and obtain electronic copies of the revised risk assessments and related documents mentioned in this notice, you can also go directly to the Home Page for the Office of Pesticide Programs (OPP) at http://www.epa.gov/pesticides/op/.

B. *In Person.* The Agency has established an official record for this action under docket control number OPP–34136A for naled and OPP–34147B for temephos. The official record consists of the documents specifically referenced in this action, any public comments received during an applicable comment period, and other information related to this action, including any information claimed as CBI. This official record includes the documents that are physically located in the docket, as well as the documents that are referenced in those documents. The public version of the official record does not include any information claimed as CBI. The public version of the official record, which includes printed, paper versions of any electronic comments submitted during an applicable comment period, is available for inspection in Rm. 119, Crystal Mall #2, 1921 Jefferson Davis Hwy., Arlington, VA, from 8:30 a.m. to 4 p.m., Monday through Friday, excluding legal holidays. The PIRIB telephone number is (703) 305–5805.

III. How Can I Respond to this Action?

A. How and to Whom Do I Submit Comments?

You may submit comments through the mail, in person, or electronically. To ensure proper receipt by EPA, it is imperative that you identify docket control number OPP–34136A for naled and OPP–34147B for temephos in the subject line on the first page of your response.

1. *By mail.* Submit comments to: Public Information and Records Integrity Branch, Information Resources and Services Division (7502C), Office of Pesticide Programs, Environmental Protection Agency, 401 M St., SW., Washington, DC 20460.

2. *In person or by courier.* Deliver comments to: Public Information and Records Integrity Branch, Information Resources and Services Division, Office of Pesticide Programs, Environmental Protection Agency, Rm. 119, Crystal Mall #2, 1921 Jefferson Davis Hwy., Arlington, VA. The PIRIB is open from 8:30 a.m. to 4 p.m., Monday through Friday, excluding legal holidays. The PIRIB telephone number is (703) 305–5805.

3. *Electronically* . Submit electronic comments by e-mail to: ''opp-docket@epa.gov,'' or you can submit a computer disk as described in this unit. Do not submit any information electronically that you consider to be CBI. Electronic comments must be submitted as an ASCII file, avoiding the use of special characters and any form of encryption. Comments and data will also be accepted on standard computer disks in WordPerfect 6.1/8.0 or ASCII file format. All comments in electronic form must be identified by the docket control number OPP–34136A for naled and OPP–34147B for temephos. Electronic comments may also be filed online at many Federal Depository Libraries.

B. How Should I Handle CBI Information that I Want to Submit to the Agency?

Do not submit any information electronically that you consider to be CBI. You may claim information that you submit to EPA in response to this document as CBI by marking any part or all of that information as CBI. Information so marked will not be disclosed except in accordance with procedures set forth in 40 CFR part 2. In addition to one complete version of the comment that includes any information claimed as CBI, a copy of the comment that does not contain the information claimed as CBI must be submitted for inclusion in the public version of the official record. Information not marked confidential will be included in the public version of the official record without prior notice. If you have any questions about CBI or the procedures for claiming CBI, please consult the person listed under ''FOR FURTHER INFORMATION CONTACT.''

IV. What Action is EPA Taking in this Notice?

EPA is making available for public viewing the revised risk assessments and related documents for two organophosphates, naled and temephos. These documents have been developed as part of the pilot public participation process that EPA and USDA are now using for involving the public in the reassessment of pesticide tolerances under the Food Quality Protection Act (FQPA), and the reregistration of individual organophosphate pesticides under the Federal Insecticide, Fungicide, and Rodenticide Act (FIFRA). The pilot public participation process was developed as part of the EPA-USDA Tolerance Reassessment Advisory Committee (TRAC), which was established in April 1998, as a subcommittee under the auspices of EPA's National Advisory Council for Environmental Policy and Technology. A goal of the pilot public participation process is to find a more effective way for the public to participate at critical junctures in the Agency's development of organophosphate risk assessments and risk management decisions. EPA and USDA began implementing this pilot process in August 1998, to increase transparency and opportunities for stakeholder consultation. The documents being released to the public through this notice provide information on the revisions that were made to the naled and temephos preliminary risk assessments, which where released to the public, August 10, 1998 (63 FR 43175) (FRL–6024–3) for naled and September 9, 1998 (63 FR 48213) (FRL–6030–2) for temephos, through notices in the **Federal Register**.

As part of the pilot public participation process, EPA and USDA may hold public meetings (called Technical Briefings) to provide interested stakeholders with opportunities to become more informed about revised organophosphate risk assessments. During the Technical Briefings, EPA describes the major points (e.g. risk contributors), use data that were used (e.g., data from USDA's Pesticide Data Program (PDP)), and discusses how public comments impacted the assessment. USDA provides ideas on possible risk management. Stakeholders have an opportunity to ask clarifying questions, and all meeting minutes are placed in the OPP public docket. Technical Briefings may not be held for chemicals that have limited use patterns or low levels of risk concern. The use patterns for naled and temephos are predominately mosquito control, therefore, no Technical Briefing is planned. In cases where no Technical Briefing is held, the Agency will make a special effort to communicate with interested stakeholders in order to better ensure their understanding of the revised assessments and how they can participate in the organophosphate pilot public participation process. EPA has a good familiarity with the stakeholder groups associated with the use of naled and temephos who may be interested in participating in the risk assessment/risk management process, and will contact

them individually to inform them that no Technical Briefing will be held. EPA is willing to meet with stakeholders to discuss the naled and temephos revised risk assessments. Minutes of all meetings will be docketed.

In addition, this notice starts a 60-day public participation period during which the public is encouraged to submit risk management proposals or otherwise comment on risk management for naled and temephos. The Agency is providing an opportunity, through this notice, for interested parties to provide written risk management proposals or ideas to the Agency on the pesticides specified in this notice. Such comments and proposals could address ideas about how to manage dietary, occupational, or ecological risks on specific naled and temephos use sites or crops across the United States or in a particular geographic region of the country. To address dietary risk, for example, commenters may choose to discuss the feasibility of lower application rates, increasing the time interval between application and harvest (''pre-harvest intervals''), modifications in use, or suggest alternative measures to reduce residues contributing to dietary exposure. For occupational risks, for example, commenters may suggest personal protective equipment or technologies to reduce exposure to workers and pesticide handlers. For ecological risks, commentors may suggest ways to reduce environmental exposure, e.g., exposure to birds, fish, mammals, and other non-target organisms. EPA will provide other opportunities for public participation and comment on issues associated with the organophosphate tolerance reassessment program. Failure to participate or comment as part of this opportunity will in no way prejudice or limit a commenter's opportunity to participate fully in later notice and comment processes. All comments and proposals must be received by EPA on or before December 6, 1999, at the addresses given under the ''ADDRESSES'' section. Comments and proposals will become part of the Agency record for the organophosphate specified in this notice.

List of Subjects

Environmental protection, Chemicals, Pesticides and pests.

Dated: September 30, 1999.

Lois Rossi,

Director, Special Review and Reregistration Division, Office of Pesticide Programs.

[FR Doc. 99–26073 Filed 10–5–99; 8:45 am]

BILLING CODE 6560–50–F

ENVIRONMENTAL PROTECTION AGENCY

[PF–835; FRL–6029–9]

American Cyanamid Company; Pesticide Tolerance Petition Filing

AGENCY: Environmental Protection Agency (EPA).

ACTION: Notice.

SUMMARY: This notice announces the initial filing of a pesticide petition proposing the establishment of regulations for residues of a certain pesticide chemical in or on various food commodities.

DATES: Comments, identified by the docket control number PF–835, must be received on or before November 5, 1999.

ADDRESSES: By mail submit written comments to: Information and Records Integrity Branch, Public Information and Services Divison (7502C), Office of Pesticides Programs, Environmental Protection Agency, 401 M St., SW., Washington, DC 20460. In person bring comments to: Rm. 119, CM #2, 1921 Jefferson Davis Highway, Arlington, VA.

Comments and data may also be submitted electronically by following the instructions under ''SUPPLEMENTARY INFORMATION.'' No confidential business information should be submitted through e-mail.

Information submitted as a comment concerning this document may be claimed confidential by marking any part or all of that information as ''Confidential Business Information'' (CBI). CBI should not be submitted through e-mail. Information marked as CBI will not be disclosed except in accordance with procedures set forth in 40 CFR part 2. A copy of the comment that does not contain CBI must be submitted for inclusion in the public record. Information not marked confidential may be disclosed publicly by EPA without prior notice. All written comments will be available for public inspection in Rm. 119 at the address given above, from 8:30 a.m. to 4 p.m., Monday through Friday, excluding legal holidays.

FOR FURTHER INFORMATION CONTACT: Marion M. Johnson, Registration Division (7505W), Office of Pesticide Programs, Environmental Protection Agency, 401 M St., SW, Washington, DC 20460. Office location, telephone number, and e-mail address: Rm. 208, Crystal Mall #2 , 1921 Jefferson Davis Highway, Arlington, VA 22202, (703) 305–6701; e-mail:johnson.marion @epamail.epa.gov.

SUPPLEMENTARY INFORMATION: EPA has received a pesticide petition as follows proposing the establishment and/or amendment of regulations for residues of certain pesticide chemical in or on various food commodities under section 408 of the Federal Food, Drug, and Comestic Act (FFDCA), 21 U.S.C. 346a. EPA has determined that this petition contains data or information regarding the elements set forth in section 408(d)(2); however, EPA has not fully evaluated the sufficiency of the submitted data at this time or whether the data supports granting of the petition. Additional data may be needed before EPA rules on the petition.

The official record for this notice of filing, as well as the public version, has been established for this notice of filing under docket control number [PF–835] (including comments and data submitted electronically as described below). A public version of this record, including printed, paper versions of electronic comments, which does not include any information claimed as CBI, is available for inspection from 8:30 a.m. to 4 p.m., Monday through Friday, excluding legal holidays. The official record is located at the address in ''ADDRESSES'' at the beginning of this document.

Electronic comments can be sent directly to EPA at:

opp-docket@epamail.epa.gov

Electronic comments must be submitted as an ASCII file avoiding the use of special characters and any form of encryption. Comment and data will also be accepted on disks in Wordperfect 5.1/6.1 file format or ASCII file format. All comments and data in electronic form must be identified by the docket control number (PF–835) and appropriate petition number. Electronic comments on this notice may be filed online at many Federal Depository Libraries.

List of Subjects

Environmental protection, Agricultural commodities, Food additives, Feed additives, Pesticides and pests, Reporting and recordkeeping requirements.

Dated: September 28, 1999.

James Jones,

Director, Registration Division, Office of Pesticide Programs.

Summary of Petition

The petitioner summary of the pesticide petition is printed below as required by section 408(d)(3) of the FFDCA. The summary of the petition was prepared by the petitioner and represents the views of the petitioner.

EPA is publishing the petition summaries verbatim without editing them in any way. The petition summary announces the availability of a description of the analytical methods available to EPA for the detection and measurement of the pesticide chemical residues or an explanation of why no such method is needed.

American Cyanamid Company

PP 2F2609

EPA has received a pesticide petition (PP 2F2609) from American Cyanamid Company, P. O. Box 400, Princeton, NJ 08543-0400, proposing pursuant to section 408(d) of the Federal Food, Drug, and Cosmetic Act, 21 U.S.C. 346a(d), to amend 40 CFR part 180 by establishing a tolerance for residues of tetrahydro-5,5-dimethyl-2(1H)-pyrimidinone[3-{4-(trifluoromethyl)phenyl]-1-[2-[4-(trifluoromethyl)phenyl]ethenyl]-2-propenylidene]hydrazone, hydramethylnon] in or on the raw agricultural commodity [pineapples] at 0.05 parts per million (ppm). EPA has determined that the petition contains data or information regarding the elements set forth in section 408(d)(2) of the FFDCA; however, EPA has not fully evaluated the sufficiency of the submitted data at this time or whether the data supports granting of the petition. Additional data may be needed before EPA rules on the petition.

A. Residue Chemistry

1. *Plant metabolism*. Metabolism studies were conducted on grass and pineapples utilizing two distinct ^{14}C-radiolabeled forms of hydramethylnon. Based on these studies, the qualitative nature of the residues of hydramethylnon in plants is understood and the parent molecule is considered to be the only residue of concern.

2. *Analytical method*. Adequate enforcement methodology is available in PAM II (Method I) to enforce the tolerance expression. A confirmatory method has recently been submitted to the FDA for inclusion in PAM II.

3. *Magnitude of residue*. Based on the results of seven pineapple field trials, including two studies conducted at 5x the maximum application rate, residues of hydramethylnon are not expected to exceed 0.05 ppm in/on pineapples. Processing studies have demonstrated that residues are not expected to concentrate in pineapple processed commodities. The Agency has previously established a time-limited tolerance at this level to cover residues that may occur as a result of use under section 18 emergency authorizations issued to the State of Hawaii. Secondary residues of hydramethylnon are not expected in animal commodities and no tolerances for secondary residues of hydramethylnon in livestock commodities are currently established.

B. Toxicological Profile

1. *Acute toxicity*. Based on the results of the acute toxicity data, hydramethylnon does not exhibit significant acute toxicity. For the acute oral study in rats, the LD_{50} in males was 817 milligram/kilogram (mg/kg) and the LD_{50} in females was 1,502 mg/kg. The LD_{50} for the acute dermal study in rabbits was greater than 2,000 mg/kg and the 4-hour LC_{50} for acute inhalation in rats was 2.9 mg/l (males and females combined). Hydramethylnon is not a dermal irritant or a skin sensitizer and is a mild eye irritant.

2. *Genotoxicty*. The following genotoxicity tests were all negative: *Salmonella typhimurium/Escherichia coli* reverse gene mutation assay, Schizosaccharomyces pombe P1 forward gene mutation assay, *in vitro* Chinese Hamster Ovary (CHO) chromosome aberration, Saccharomyces cerevisiae D4 mitotic gene conversion assay. The data suggest that hydramethylnon is not genotoxic in microbial test systems or clastogenic in cultured mammalian cells and does not induce dominant lethality in male rat germinal cells. The evidence of male infertility and testicular atrophy at 90 milligram/kilogram/day (mg/kg/day in the dominant lethal assay is consistent with similar findings observed in the chronic rat study, the 18-month mouse feeding study, the 2-generation reproduction study, and the 91 day oral gavage study in dogs.

3. *Reproductive and developmental toxicity*. There is no evidence in the prenatal developmental toxicity studies in either rats or rabbits of alterations to CNS development, nor is there any indication of neurotoxicity in the other short or long-term oral studies in rats, mice or dogs. No evidence of the increased sensitivity of the developing offspring was noted as the No Observed Effect Levels (NOELs) for developmental toxicity in the rat (10 milligram/kilogram/body weight/day (mg/kg/bwt/day) and the rabbit (5 mg/kg/bwt/day) were greater than the NOELs for maternal toxicity (3 mg/kg/bwt/day for the rat and < 5 (mg/kg/bwt/day for the rabbit). Hydramethylnon is not teratogenic in either the rat or rabbit. Hydramethylnon is a male reproductive toxicant which appears to specifically target the germinal cells and/or tissues in the testes. In a 2-generation rat reproduction study, there was no evidence of systemic toxicity, nor was there any evidence of direct toxicity in the offspring. The reproductive NOEL was 25 ppm (1.66 mg/kg/day for males) and the Lowest Observed Adverse Effect Level (LOAEL) was 50 ppm (3.32 mg/kg/day for males), based upon histopathological findings in the testes and the epididymides. Also at 75 ppm (5.05 mg/kg/day in males), reproductive performance of the males was decreased with longer precoital intervals, lower pregnancy rates, reduced gestation weight gain for females and smaller litters.

4. *Subchronic toxicity*. The following are the results of the subchronic toxicity tests that have been conducted with hydramethylnon: 91 day feeding study in rats (NOEL 2.5 mg/kg/bwt/day); 91 day gavage study in dogs (NOEL < 3 mg/kg/bwt/day); 21 day dermal study in rabbits (NOEL 250 mg/kg/ bwt/day). For both the short- and intermediate-term Margin of Exposure (MOE) calculations, the Agency's Hazard Identification Committee recommended use of the Systemic NOEL (freestanding) of 250 mg/kg/day from the 21 day dermal toxicity study in New Zealand white rabbits. Non-adverse signs at the NOEL included decreased food consumption in males and females, and thrombocytopenia in females.

5. *Chronic toxicity*. The EPA has established the Reference Dose (RfD) for hydramethylnon at 0.01 mg/kg/day. This RfD is based on a 6-month feeding study in dogs with a NOEL of 1.0 mg/kg/day based on an increased incidence of soft stools, mucoid stools, and diarrhea at the LOAEL of 3.0 mg/kg/day. An uncertainty factor of 100 was used during calculation of the RfD. Based on a statistically significant increase in lung adenomas and combined lung adenomas/carcinomas in female mice, hydramethylnon has been classified as a Group C chemical (possible human carcinogen) by the Agency's Cancer Peer Review Committee. The Committee recommended using the RfD approach for risk assessment.

6. *Animal metabolism*. Adequate rat and goat metabolism studies are available for hydramethylnon. Results of ruminant metabolism and feeding studies clearly demonstrate that there is no reasonable expectation that residues of hydramethylnon in pineapple processed commodities will be transferred to milk or edible tissues. Hence, no tolerances on any food items derived from ruminants are required for hydramethylnon.

7. *Metabolite toxicology*. The parent molecule is the only moiety of toxicological significance which needs regulation in plant commodities.

8. *Endocrine disruption*. EPA is required to develop a screening program to determine whether certain substances (including all pesticides and inerts) ''may have an effect in humans that is similar to an effect produced by a naturally occurring estrogen, or such other endocrine effect.'' The Agency is currently working with interested stakeholders, including other government agencies, public interest groups, industry and research scientists in developing a screening and testing program and a priority setting scheme to implement this program. Congress has allowed 3 years from the passage of FQPA (August 3, 1999) to implement this program. At the present time, no reliable information is available to indicate that hydramethylnon has a potential to have an effect in humans that is similar to effects produced by naturally occurring estrogen or other endocrine substances.

C. Aggregate Exposure

1. *Dietary exposure*. A 0.05 ppm tolerance for the residues of hydramethylnon has only been established for grasses and as there is no reasonable expectation that residues in grass will be transferred to the milk and edible tissues of ruminants, no tolerances for hydramethylnon have been established on any food items. Thus, there is no contribution to the aggregate exposure of hydramethylnon residues from dietary sources. Therefore, the following risk assessment to assess dietary exposures and risks from hydramethylnon will be based on dietary exposures resulting from only the pending tolerance in/on pineapples.

2. *Acute exposure and risk*—i. *Food*. Acute dietary risk assessments are performed for a food-use pesticide if a toxicological study has indicated the possibility of an effect of concern occurring as a result of a 1-day or single exposure. The acute dietary (food only) risk assessment is not required as the Agency's Hazard Identification Committee did not identify any acute dietary risk endpoints.

ii. *Chronic exposure and risk*. In response to EPA's granting of an emergency exemption under FIFRA section 18 authorizing the use of hydramethylnon in pineapples in Hawaii, a time-limited tolerance of 0.05 ppm was established in/on pineapple fruits. The Agency has conducted a chronic dietary risk assessment based on very conservative assumptions -- 100% of pineapple commodities will contain hydramethylnon residues and those residues will be at the level of the required tolerance -- which results in an overestimate of human dietary exposure. Thus, in making a safety determination for this time-limited tolerance, HED has taken into account this conservative exposure assessment. Based on similar considerations, the pending hydramethylnon tolerance in/on pineapples results in a TMRC that is equivalent to the following percentages of the RfD of 0.01 mg/kg/day:

Population Subgroup	% RfD
U.S. Population	<0.1%
Nursing Infants	<0.1%
Non-Nursing Infants (<1-year old)	0.2%
Children (1-6 years old)	0.1%
Children (7-12 years old)	<0.1%

The subgroups listed above are: (1) the U.S. population (48 States); (2) those for infants and children; and, (3) the other subgroups for which the percentage of the RfD occupied is greater than that occupied by the subgroup U.S. population (48 States).

3. *Drinking water*. Based on its physical and chemical properties, (extremely low water solubility of 7-9 ppb at 25 °C and rapid aqueous photolysis with a ½ of less than 1 hour), there is no concern for exposure to residues of hydramethylnon in potable water. Hydramethylnon is also immobile in soil and does not leach because it is strongly adsorbed to all common soil types; thus hydramethylnon and its degradates are not expected to leach to groundwater. There are no established Maximum Contaminant Levels (MCLs) for residues of hydramethylnon in drinking water and no health advisory levels for this active ingredient in drinking water have been issued. Because the Agency lacks sufficient water-related exposure data to complete a comprehensive drinking water risk assessment for many pesticides, EPA has commenced and nearly completed a process to identify a reasonable yet conservative bounding figure for the potential contribution of water-related exposure to the aggregate risk posed by a pesticide. In developing the bounding figure, EPA estimated residue levels in water for a number of specific pesticides using various data sources. The Agency then applied the estimated residue levels, in conjunction with appropriate toxicological endpoints (RfD's or acute dietary NOEL's) and assumptions about body weight and consumption, to calculate, for each pesticide, the increment of aggregate risk contributed by consumption of contaminated water. While EPA has not yet pinpointed the appropriate bounding figure for exposure from contaminated water, the ranges the Agency is continuing to examine are all below the level that would cause hydramethylnon to exceed the RfD if the tolerance being considered in this document were granted. The potential exposures associated with hydramethylnon in water, even at the higher levels the Agency is considering as a conservative upper bound, would be negligible and there is a reasonable certainty of no harm if the pending tolerance is granted.

4. *Non-dietary exposure*. Hydramethylnon is currently registered for use on the following residential non-food sites: recreational areas, ornamental plants, lawns, turf, and household or domestic dwellings. However as the vapor pressure of hydramethylnon is less than 2×10^{-8} mm of Hg at 35 and 45 °C, the potential for non-occupational exposure by inhalation is insignificant. Moreover, based on the current and proposed use patterns, chronic exposure is not likely. Although there may be short- and intermediate-term non-occupational dermal exposure scenarios, dermal absorption studies conducted with the 2% gel formulation indicate that less than 1% of the dose is dermally absorbed after 10-hours. In addition, the Agency has reviewed risk assessments and accepted the existence of more than adequate margins of exposure ((MOE) of 658 for both commercial and homeowner applicators and MOEs of >540 for post-application homeowner exposures) for other hydramethylnon-based products, containing up to 2% active ingredient. Thus, this new use pattern does not present any incremental risk of exposure to hydramethylnon residues.

D. Cumulative Effects

To the best of our knowledge, hydramethylnon is the only registered pesticide which belongs to a unique chemical class, the pyrimidinones (amidinohydrazones). Unlike other pesticides for which EPA has followed a cumulative risk approach based on a common mechanism of toxicity, hydramethylnon does not appear to produce a toxic metabolite produced by other substances. Therefore, the potential for cumulative effects of hydramethylnon and other chemicals having a common mechanism of toxicity should not be of concern and for the purposes of this tolerance action, it is assumed that hydramethylnon does not have a common mechanism of toxicity with other substances.

E. Safety Determination

1. *U.S. population*—i. *Acute risk*. An acute endpoint has not been identified. The Agency's Hazard Identification Committee determined that this risk assessment is not required.

ii. *Chronic risk*. Using the TMRC exposure assumptions described above, EPA has concluded that aggregate exposure to hydramethylnon from food will utilize <1% of the RfD of 0.01 mg/kg/day for the U.S. population. EPA generally has no concern for exposures below 100% of the RfD because the RfD represents the level at or below which daily aggregate dietary exposure over a lifetime will not pose appreciable risks to human health. In view of the negligible potential for exposure to hydramethylnon in drinking water and from non-dietary, non-occupational exposure, the aggregate exposure is not expected to exceed 100% of the RfD. EPA has concluded that there is a reasonable certainty that no harm will result from aggregate exposure to hydramethylnon residues. According to Agency policy, the residential uses of hydramethylnon do not fall under a chronic exposure scenario. Thus, it can be concluded that there is a reasonable certainty that no harm will result from chronic aggregate exposure to hydramethylnon residues.

iii. *Short- and intermediate-term risk*. Short- and intermediate-term aggregate exposure takes into account chronic dietary food and water (considered to be a background exposure level) plus indoor and outdoor residential exposure. Although hydramethylnon has residential uses, this new use pattern does not present any incremental risk of exposure to hydramethylnon residues. As discussed previously in section C. 4., the vapor pressure of hydramethylnon is less than 2×10^{-8} mm of Hg at 35 and 45 °C; thus, the potential for non-occupational exposure by inhalation is insignificant. Moreover, based on the physical and chemical properties of hydramethylnon, exposure from drinking water is not likely. Although there may be short- and intermediate-term occupational and non-occupational dermal exposures, the Agency has reviewed risk assessments and accepted the existence of more than adequate margins of exposure (MOE of 658 for both commercial and homeowner applicators and MOEs of >540 for post-application homeowner exposures) for other hydramethylnon-based products, containing up to 2% active ingredient. Thus, as in the case for chronic exposure scenarios, it can be concluded that there is a reasonable certainty that no harm will result from short and intermediate-term exposures to hydramethylnon residues.

2. *Infants and children*-i. *Chronic risk*. Using the TMRC exposure assumptions described above, EPA has concluded that aggregate exposure to hydramethylnon from food will utilize only 0.2% of the RfD of 0.01 mg/kg/day for non-nursing infants <1-year old.

ii. *Safety factor for infants and children-In general*. In assessing the potential for additional sensitivity of infants and children to residues of hydramethylnon, EPA considered data from developmental toxicity studies in the rat and rabbit and a 2-generation reproduction study in the rat.. EPA has concluded that the toxicological database for hydramethylnon is adequate and does not indicate an increased sensitivity of perinatal animals to pre- and/or post natal exposures. Therefore, no additional uncertainty factor for protection of infants and children are warranted for hydramethylnon.

iii. *Developmental toxicity studies*. In the rat developmental toxicity study, the developmental NOEL was 10 mg/kg b.w./day with a NOEL for maternal toxicity of 3.0 mg/kg/bwt/day. In the rabbit developmental toxicity study the developmental NOEL was 5 mg/kg/bwt/day with a NOEL for maternal toxicity of less than 5 mg/kg/bwt/day.

iv. *Reproductive toxicity study*. A 2-generation reproduction study with hydramethylnon was conducted in rats. The data support a NOEL for reproductive toxicity of 50 ppm (4.2 mg/kg/bwt/day), while the NOEL for paternal toxicity was 25 ppm (2.1 mg/kg/bwt/day). No adverse effects were observed in the pups.

These values are significantly higher than the NOEL used to calculate the RfD for the general U.S. population which is 0.01 mg/kg/bwt/day. These results demonstrate that there is a reasonable certainty that no harm will result to infants or children from aggregate exposure to hydramethylnon.

F. International Tolerances

There are no Codex, Canadian or Mexican residue limits established for hydramethylnon in/on pineapple. Thus, harmonization is not an issue for this petition.

[FR Doc. 99–26079 Filed 10–5–98; 8:45 am]

BILLING CODE 6560–50–F

ENVIRONMENTAL PROTECTION AGENCY

[OPP–30477A; FRL–6380–2]

Pesticide Product; Registration Approval

AGENCY: Environmental Protection Agency (EPA).

ACTION: Notice.

SUMMARY: This notice announces Agency approval of an application to register the pesticide product MNDA M-9011 containing an active ingredient not included in any previously registered product pursuant to the provisions of section 3(c)(5) of the Federal Insecticide, Fungicide, and Rodenticide Act (FIFRA), as amended.

FOR FURTHER INFORMATION CONTACT: By mail: Richard J. Gebken, Registration Division (7505C), Office of Pesticide Programs, Environmental Protection Agency, 401 M St., SW., Washington, DC 20460. Office location, telephone number, and e-mail address: 2nd fl. Rm. 201, Crystal Mall #2, 1921 Jefferson Davis Hwy., Arlington, VA, (703)–305–6701; and e-mail address: gebken.richard@epa.gov.

SUPPLEMENTARY INFORMATION:

I. General Information

A. Does This Action Apply to Me?

You may be affected by this action if you are an agricultural producer, food manufacturer, or pesticide manufacturer. Potentially affected categories and entities may include, but are not limited to:

Categories	NAICS	Examples of Potentially Affected Entities
Industry	111	Crop production
	112	Animal production
	311	Food manufacturing
	32532	Pesticide manufacturing

This listing is not intended to be exhaustive, but rather provides a guide for readers regarding entities likely to be

affected by this action. Other types of entities not listed in the table could also be affected. The North American Industrial Classification System (NAICS) codes have been provided to assist you and others in determining whether or not this action might apply to certain entities. If you have questions regarding the applicability of this action to a particular entity, consult the person listed in the ''FOR FURTHER INFORMATION CONTACT.''

B. How Can I Get Additional Information, Including Copies of This Document and Other Related Documents?

1. *Electronically*. You may obtain electronic copies of this document, and certain other related documents that might be available electronically, from the EPA Internet Home Page at http://www.epa.gov/. To access this document, on the Home Page select ''Laws and Regulations'' and then look up the entry for this document under the '' **Federal Register—** Environmental Documents.'' You can also go directly to the **Federal Register** listings at http://www.epa.gov/fedrgstr/.

To access a fact sheet which provides more detail on this registration, go to the Office of Pesticide Programs home page at http://www.epa.gov/pesticides/, and select ''factsheet.''

2. *In person*. The Agency has established an official record for this action under docket control number OPP–30477A. The official record consist of the document specifically referenced in this action, any public comments received during an applicable comment period, and other information related to this action, including any information claimed as confidential business information (CBI). This official record includes the documents that are physically located in the docket, as well as the documents that are referenced in those documents. The public version of the official record does not include any information claimed as CBI. The public version of the official record, which includes printed, paper versions of any electronic comments submitted during an applicable comment period, is available for inspection in the Public Information and Records Integrity Branch (PIRIB), Rm. 119, Crystal Mall #2, 1921 Jefferson Davis Hwy., Arlington, VA, from 8:30 a.m. to 4 p.m., Monday through Friday, excluding legal holidays. The PIRIB telephone number is (703) 305–5805.

In accordance with section 3(c)(2) of FIFRA, a copy of the approved label, the list of data references, the data and other scientific information used to support registration, except for material specifically protected by section 10 of FIFRA, are also available for public inspection. Requests for data must be made in accordance with the provisions of the Freedom of Information Act and must be addressed to the Freedom of Information Office (A-101), 401 M St., SW., Washington, DC 20460. The request should: Identify the product name and registration number and specify the data or information desired.

A paper copy of the fact sheet which provides more detail on this registration may be obtained from the National Technical Information Service (NTIS), 5285 Port Royal Road, Springfield, VA 22161.

II. Did EPA Approve the Application?

The Agency approved the application after considering all required data on risks associated with the proposed use of *N*-methylneodecanamide (MNDA), and information on social, economic, and environmental benefits to be derived from use. Specifically, the Agency has considered the nature of the chemical and its pattern of use, application methods and rates, and level and extent of potential exposure. Based on these reviews, the Agency was able to make basic health and safety determinations which show that use of *N*-methylneodecanamide (MNDA) when used in accordance with widespread and commonly recognized practice, will not generally cause unreasonable adverse effects to human health or to the environment.

III. Approved Application

EPA issued a notice, published in the **Federal Register** of May 3, 1999, (64 FR 23617)(FRL–6076–7), which announced that Colgate-Palmolive Company, P.O. Box 1343, 909 River Road, Piscataway, NJ 08855-1343, had submitted an application to register a manufacturing use product MNDA M-9011 Technical, an insecticide (EPA File Symbol 4822–TR containing *N*-Methylneodecanamide (MNDA) at 96.3%, an active ingredient not included in any previously registered product.

The application was approved on July 8, 1999, as MNDA M-9011, as a manufacturing use product to formulate multipurpose cleaner/insect repellent products (EPA registration number 4582–71).

List of Subjects

Environmental protection, Pesticides and pests.

Dated: September 22, 1999.

James Jones,

Director, Registration Division, Office of Pesticide Programs.

[FR Doc. 99–25575 Filed 10–5–99; 8:45 am]

BILLING CODE 6560–50–F

ENVIRONMENTAL PROTECTION AGENCY

[PF–667A; FRL–6383–5]

Gentamicin Sulfate; Withdrawal of Tolerance Petition

AGENCY: Environmental Protection Agency (EPA).

ACTION: Notice.

SUMMARY: The Agency is withdrawing pesticide petition (PP 5F4449) because the petitioner, Quimica, c/o Technology Sciences, Inc., 1101 17th St., NW., Suite 500, Washington, DC 20036, has withdrawn its pesticide registration applications and tolerance petition without prejudice to future filing for registration of the products containing gentamicin sulfate.

FOR FURTHER INFORMATION CONTACT: Mary L. Waller, Product Manager 21, Registration Division (7505C), Office of Pesticide Programs, Environmental Protection Agency, 401 M St., SW., Washington, DC 20460, telephone number (703) 308-9354, e-mail address: waller.mary@epa.gov.

SUPPLEMENTARY INFORMATION:

I. Does This Action Apply to Me?

Although this action only applies to the registrant in question, it is directed to the public in general. Since various individuals or entities may be interested, the Agency has not attempted to describe all the specific entities that may be interested in this action. If you have any questions regarding this action, please consult the person listed in the ''FOR FURTHER INFORMATION CONTACT'' section.

II. How Can I Get Additional Information, Including Copies of This Document and Other Related Documents?

1. *Electronically*. You may obtain copies of this document and certain other available support documents from the EPA Internet Home Page at http://www.epa.gov/. On the Home Page select ''Laws and Regulations'' and then look up the entry for this document under the ''**Federal Register**- Environmental Documents.''

2. *In person*. The Agency has established an official record for this

action under docket control number PF-667. The official record consists of the documents specifically referenced in this action and other information related to this action, including any information claimed as confidential business information (CBI). This official record includes the documents that are physically located in the docket, as well as the documents that are referenced in those documents. The public version of the official record does not include any information claimed as CBI. The public version of the official record, which includes printed, paper versions of any electronic comments submitted during an applicable comment period, is available for inspection in the Public Information and Records Integrity Branch (PIRIB), Rm. 119, Crystal Mall #2, 1921 Jefferson Davis Highway, Arlington, VA, from 8:30 a.m. to 4 p.m., Monday through Friday, excluding legal holidays. The PIRIB telephone number is 703–305–5805.

III. What Action Is the Agency Taking?

EPA is announcing that Quimica Agronomica de Mexico S. de R.L. MI. (Quimica) has withdrawn its applications to register a bactericide/fungicide containing gentamicin sulfate, as provided for in section 3(c)(7)(C) of the Federal Insecticide, Fungicide, and Rodenticide Act (FIFRA), as amended by the Food Quality Protection Act of 1996. Gentamicin sulfate is an active ingredient not included in any previously registered pesticide product. Quimica has also withdrawn its pesticide petition (PP 5F4449) requesting the establishment of a tolerance for residues of gentamicin sulfate under section 408 of the Federal Food, Drug, and Cosmetic Act (FFDCA)

EPA issued a notice in the **Federal Register** on August 7, 1996 (61 FR 41154), which announced Quimica's submission of a pesticide petition (PP# 5F4449). This petition requested that EPA amend 40 CFR part 180 by establishing a maximum residue limit (aka pesticide tolerance) for the fungicide/bactericide gentamicin sulfate in or on pome fruit at 0.1 ppm.

EPA received comments from the American Society for Microbiology (ASM) and the Centers for Disease Control (CDC) within the Department of Health and Human Services (HHS). EPA held and participated in an inter-agency meeting with the Food and Drug Administration (FDA), U. S. Department of Agriculture (USDA), and CDC to discuss the use of this antibiotic as a pesticide. There was also significant public interest in these proceedings. Quimica has since decided to withdraw its pesticide registration applications and tolerance petition.

List of Subjects

Environmental protection.

Dated: September 23, 1999.

James Jones,

Director, Registration Division, Office of Pesticide Programs.

[FR Doc. 99–25583 Filed 10–5–99; 8:45 am]

BILLING CODE 6560–50–F

ENVIRONMENTAL PROTECTION AGENCY

[OPPTS–59367; FRL–6384–7]

Approval of Test Marketing Exemption for a Certain New Chemical

AGENCY: Environmental Protection Agency (EPA).

ACTION: Notice.

SUMMARY: This notice announces EPA's approval of an application for test marketing exemption (TME) under section 5(h)(1) of the Toxic Substances Control Act (TSCA) and 40 CFR 720.38. EPA has designated this application as TME–99–2. The test marketing conditions are described in the TME application and in this notice.

DATES: Approval of this TME is effective on September 28, 1999.

FOR FURTHER INFORMATION CONTACT: For general information contact: Joseph S. Carra, Acting Division Director, Environmental Assistance Division (7408), Office of Pollution Prevention and Toxics, Environmental Protection Agency, 401 M St., SW., Washington, DC 20460; telephone number: (202) 554–1815 and TDD: (202) 554–0551; and e-mail address: TSCA-Hotline@epa.gov.

For technical information contact: Adella Watson, New Chemicals Notice Management Branch, Chemical Control Division (7405), Office of Pollution Prevention and Toxics, Environmental Protection Agency, 401 M St., SW., Washington, DC 20460; telephone number: (202) 260–3752; and e-mail address: watson.adella@epa.gov.

SUPPLEMENTARY INFORMATION:

I. Does this Action Apply to Me?

This action is directed in particular to the chemical manufacturer and/or importer who submitted the TME to EPA. This action may, however, be of interest to the public in general. Since other entities may also be interested, the Agency has not attempted to describe all the specific entities that may be affected by this action. If you have any questions regarding the applicability of this action to a particular entity, consult the person listed in the ''FOR FURTHER INFORMATION CONTACT'' section.

II. How Can I Get Additional Information, Including Copies of this Document or Other Related Documents?

A. *Electronically*. You may obtain electronic copies of this document, and certain other related documents that might be available electronically, from the EPA Internet Home Page at http://www.epa.gov/. To access this document, on the Home Page select ''Laws and Regulations'' and then look up the entry for this document under the ''**Federal Register**--Environmental Documents.'' You can also go directly to the **Federal Register** listings at http://www.epa.gov/fedrgstr/.

B. *In person*. The Agency has established an official record for this action under docket control number OPPTS–59367. The official record consists of the documents specifically referenced in this action, any public comments received during an applicable comment period, and other information related to this action, including any information claimed as confidential business information (CBI). This official record includes the documents that are physically located in the docket, as well as the documents that are referenced in those documents. The public version of the official record does not include any information claimed as CBI. The public version of the official record, which includes printed, paper versions of any electronic comments submitted during an applicable comment period, is available for inspection in the TSCA Nonconfidential Information Center, North East Rm. B-607, Waterside Mall, 401 M St., SW., Washington, DC. The Center is open from noon to 4 p.m., Monday through Friday, excluding legal holidays. The telephone number for the Center is (202) 260–7099.

III. What is the Agency's Authority for Taking this Action?

Section 5(h)(1) of TSCA and 40 CFR 720.38 authorize EPA to exempt persons from premanufacture notification (PMN) requirements and permit them to manufacture or import new chemical substances for test marketing purposes, if the Agency finds that the manufacture, processing, distribution in commerce, use, and disposal of the substances for test marketing purposes will not present an unreasonable risk of injury to health or the environment. EPA may impose restrictions on test marketing activities and may modify or revoke a test marketing exemption upon receipt of new information which casts

significant doubt on its finding that the test marketing activity will not present an unreasonable risk of injury.

IV. What Action is the Agency Taking?

EPA has approved the above-referenced TME. EPA has determined that test marketing the new chemical substance, under the conditions set out in the TME application and in this notice, will not present any unreasonable risk of injury to health or the environment.

V. What Restrictions Apply to this TME?

The test market time period, production volume, number of customers, and use must not exceed specifications in the application and this notice. All other conditions and restrictions described in the application and in this notice must also be met.

TME 99–2

Date of Receipt: March 25, 1999.

Notice of Receipt: June 14, 1999 (64 FR 31859).

Applicant: Ilford Imaging USA, Inc.

Chemical: (G) 1, 5-Naphthalenedisulfonic acid, 3-[[4-[[4,6-bis[(2-sulfoethyl)amino]-1,3,5-triazin-2-yl]-2,5-dimethoxyphenyl]azo]-, tetrasodium salt.

Use: (G) Orange dye for inkjet printers.

Production Volume: 75 kg/yr.

Number of Customers: 1.

Test Marketing Period: 365 days, commencing on first day of commercial manufacture.

The following additional restrictions apply to this TME. A bill of lading accompanying each shipment must state that the use of the substance is restricted to that approved in the TME. In addition, the applicant shall maintain the following records until 5 years after the date they are created, and shall make them available for inspection or copying in accordance with section 11 of TSCA:

1. Records of the quantity of the TME substance produced and the date of manufacture.

2. Records of dates of the shipments to each customer and the quantities supplied in each shipment.

3. Copies of the bill of lading that accompanies each shipment of the TME substance.

VI. What was EPA's Risk Assessment for this TME?

EPA identified no significant health or environmental concerns for the test market substance. Therefore, the test market activities will not present any unreasonable risk of injury to human health or the environment.

VII. Can EPA Change Its Decision on this TME in the Future?

Yes. The Agency reserves the right to rescind approval or modify the conditions and restrictions of an exemption should any new information that comes to its attention cast significant doubt on its finding that the test marketing activities will not present any unreasonable risk of injury to human health or the environment.

List of Subjects

Environmental protection, Test marketing exemptions.

Dated: September 28, 1999.

Flora Chow,

Chief, New Chemicals Notice Management Branch, Office of Pollution Prevention and Toxics.

[FR Doc. 99–26075 Filed 10–5–99; 8:45 am]

BILLING CODE 6560–50–F

ENVIRONMENTAL PROTECTION AGENCY

[OPPTS–59368; FRL–6384–8]

Approval of Test Marketing Exemption for a Certain New Chemical

AGENCY: Environmental Protection Agency (EPA).

ACTION: Notice.

SUMMARY: This notice announces EPA's approval of an application for test marketing exemption (TME) under section 5(h)(1) of the Toxic Substances Control Act (TSCA) and 40 CFR 720.38. EPA has designated this application as TME–99–3. The test marketing conditions are described in the TME application and in this notice.

DATES: Approval of this TME is effective on September 28, 1999.

FOR FURTHER INFORMATION CONTACT: For general information contact: Joseph S. Carra, Acting Division Director, Environmental Assistance Division (7408), Office of Pollution Prevention and Toxics, Environmental Protection Agency, 401 M St., SW., Washington, DC 20460; telephone number: (202) 554–1815 and TDD: (202) 554–0551; and e-mail address: TSCA-Hotline@epa.gov.

For technical information contact: Adella Watson, New Chemicals Notice Management Branch, Chemical Control Division (7405), Office of Pollution Prevention and Toxics, Environmental Protection Agency, 401 M St., SW., Washington, DC 20460; telephone number: (202) 260–3752; and e-mail address: watson.adella@epa.gov.

SUPPLEMENTARY INFORMATION:

I. Does this Action Apply to Me?

This action is directed in particular to the chemical manufacturer and/or importer who submitted the TME to EPA. This action may, however, be of interest to the public in general. Since other entities may also be interested, the Agency has not attempted to describe all the specific entities that may be affected by this action. If you have any questions regarding the applicability of this action to a particular entity, consult the person listed in the ''FOR FURTHER INFORMATION CONTACT'' section.

II. How Can I Get Additional Information, Including Copies of this Document or Other Related Documents?

A. *Electronically.* You may obtain electronic copies of this document, and certain other related documents that might be available electronically, from the EPA Internet Home Page at http://www.epa.gov/. To access this document, on the Home Page select ''Laws and Regulations'' and then look up the entry for this document under the ''**Federal Register**--Environmental Documents.'' You can also go directly to the **Federal Register** listings at http://www.epa.gov/fedrgstr/.

B. *In person.* The Agency has established an official record for this action under docket control number OPPTS–59368. The official record consists of the documents specifically referenced in this action, any public comments received during an applicable comment period, and other information related to this action, including any information claimed as confidential business information (CBI). This official record includes the documents that are physically located in the docket, as well as the documents that are referenced in those documents. The public version of the official record does not include any information claimed as CBI. The public version of the official record, which includes printed, paper versions of any electronic comments submitted during an applicable comment period, is available for inspection in the TSCA Nonconfidential Information Center, North East Rm. B-607, Waterside Mall, 401 M St., SW., Washington, DC. The Center is open from noon to 4 p.m., Monday through Friday, excluding legal holidays. The telephone number for the Center is (202) 260–7099.

III. What is the Agency's Authority for Taking this Action?

Section 5(h)(1) of TSCA and 40 CFR 720.38 authorize EPA to exempt persons from premanufacture notification (PMN) requirements and permit them to

manufacture or import new chemical substances for test marketing purposes, if the Agency finds that the manufacture, processing, distribution in commerce, use, and disposal of the substances for test marketing purposes will not present an unreasonable risk of injury to health or the environment. EPA may impose restrictions on test marketing activities and may modify or revoke a test marketing exemption upon receipt of new information which casts significant doubt on its finding that the test marketing activity will not present an unreasonable risk of injury.

IV. What Action is the Agency Taking?

EPA has approved the above-referenced TME. EPA has determined that test marketing the new chemical substance, under the conditions set out in the TME application and in this notice, will not present any unreasonable risk of injury to health or the environment.

V. What Restrictions Apply to this TME?

The test market time period, production volume, number of customers, and use must not exceed specifications in the application and this notice. All other conditions and restrictions described in the application and in this notice must also be met.

TME 99–3

Date of Receipt: June 10, 1999.

Notice of Receipt: July 16, 1999 (64 FR 38425).

Applicant: Kiwi Brands.

Chemical: (G) Ethanol, 2-[2-(C_{12-14}-alkyloxy] derivs., hydrogen sulfates, compounds with triisopropanolamine.

Use: (G) Household cleaning surfactant.

Production Volume: 4.6 kg/yr.

Number of Customers: 350.

Test Marketing Period: 60 days, commencing on first day of commercial manufacture.

The following additional restrictions apply to this TME. A bill of lading accompanying each shipment must state that the use of the substance is restricted to that approved in the TME. In addition, the applicant shall maintain the following records until 5 years after the date they are created, and shall make them available for inspection or copying in accordance with section 11 of TSCA:

1. Records of the quantity of the TME substance produced and the date of manufacture.

2. Records of dates of the shipments to each customer and the quantities supplied in each shipment.

3. Copies of the bill of lading that accompanies each shipment of the TME substance.

VI. What was EPA's Risk Assessment for this TME?

EPA identified no significant health or environmental concerns for the test market substance. Therefore, the test market activities will not present any unreasonable risk of injury to human health or the environment.

VII. Can EPA Change Its Decision on this TME in the Future?

Yes. The Agency reserves the right to rescind approval or modify the conditions and restrictions of an exemption should any new information that comes to its attention cast significant doubt on its finding that the test marketing activities will not present any unreasonable risk of injury to human health or the environment.

List of Subjects

Environmental protection, Test marketing exemptions.

Dated: September 28, 1999.

Flora Chow,

Chief, New Chemicals Notice Management Branch, Office of Pollution Prevention and Toxics.

[FR Doc. 99–26077 Filed 10–5–99; 8:45 am]

BILLING CODE 6560–50–F

ENVIRONMENTAL PROTECTION AGENCY

[OPPTS–51934; FRL–6384–3]

Certain New Chemicals; Receipt and Status Information

AGENCY: Environmental Protection Agency (EPA).

ACTION: Notice.

SUMMARY: Section 5 of the Toxic Substances Control Act (TSCA) requires any person who intends to manufacture (defined by statute to include import) a new chemical (i.e., a chemical not on the TSCA Inventory) to notify EPA and comply with the statutory provisions pertaining to the manufacture of new chemicals. Under sections 5(d)(2) and 5(d)(3) of the Toxic Substances Control Act (TSCA), EPA is required to publish a notice of receipt of a premanufacture notice (PMN) or an application for a test marketing exemption (TME), and to publish periodic status reports on the chemicals under review and the receipt of notices of commencement to manufacture those chemicals. This status report, which covers the period from August 16, 1999 to September 3, 1999, consists of the PMNs and TMEs, both pending or expired, and the notices of commencement to manufacture a new chemical that the Agency has received under TSCA section 5 during this time period.

FOR FURTHER INFORMATION CONTACT: Christine M. Augustyniak, Associate Director, Environmental Assistance Division (7408), Office of Pollution Prevention and Toxics, Environmental Protection Agency, 401 M St., SW., Washington, DC 20460; telephone numbers: (202) 554–1404 and TDD: (202) 554–0551; e-mail address: TSCA-Hotline@epa.gov.

SUPPLEMENTARY INFORMATION:

I. Does this Action Apply to Me?

This action is directed to the public in general. As such, the Agency has not attempted to describe the specific entities that this action may apply to. Although others may be affected, this action applies directly to the submitter of the premanufacture notices addressed in the action. If you have any questions regarding the applicability of this action to a particular entity, consult the person listed in the ''FOR FURTHER INFORMATION CONTACT'' section.

II. How Can I Get Additional Information, Including Copies of this Document and Other Related Documents?

A. *Electronically.* You may obtain copies of this document and certain other available documents from the EPA Internet Home Page at *http://www.epa.gov/*. On the Home Page select ''Laws and Regulations'' and then look up the entry for this document under the ''**Federal Register** -- Environmental Documents.'' You can also go directly to the ''**Federal Register**'' listings at *http://www.epa.gov/fedrgstr/*.

B. *In person.* The Agency has established an official record for this action under docket control number OPPTS–51934. The official record consists of the documents specifically referenced in this action, any public comments received during an applicable comment period, and other information related to this action, including any information claimed as confidential business information (CBI). This official record includes the documents that are physically located in the docket, as well as the documents that are referenced in those documents. The public version of the official record does not include any information claimed as CBI. The public version of the official record, which includes printed, paper versions of any electronic comments submitted during

an applicable comment period, is available for inspection in the TSCA Nonconfidential Information Center, North East Rm. B–607, Waterside Mall, 401 M St., SW., Washington, DC. The Center is open from noon to 4 p.m., Monday through Friday, excluding legal holidays. The telephone number of the Center is (202) 260–7099.

III. Why is EPA Taking this Action?

Section 5 of TSCA requires any person who intends to manufacture (defined by statute to include import) a new chemical (i.e., a chemical not on the TSCA Inventory to notify EPA and comply with the statutory provisions pertaining to the manufacture of new chemicals. Under sections 5(d)(2) and 5(d)(3) of TSCA, EPA is required to publish a notice of receipt of a PMN or an application for a TME and to publish periodic status reports on the chemicals under review and the receipt of notices of commencement to manufacture those chemicals. This status report, which covers the period from August 16, 1999 to September 3, 1999, consists of the PMNs and TMEs, both pending or expired, and the notices of commencement to manufacture a new chemical that the Agency has received under TSCA section 5 during this time period.

IV. Receipt and Status Report for PMNs

This status report identifies the PMNs and TMEs, both pending or expired, and the notices of commencement to manufacture a new chemical that the Agency has received under TSCA section 5 during this time period. If you are interested in information that is not included in the following tables, you may contact EPA as described in Unit II above to access additional non-CBI information that may be available.

In table I, EPA provides the following information (to the extent that such information is not claimed as CBI) on the PMNs received by EPA during this period: the EPA case number assigned to the PMN; the date the PMN was received by EPA; the projected end date for EPA's review of the PMN; the submitting manufacturer; the potential uses identified by the manufacturer in the PMN; and the chemical identity.

I. 97 Premanufacture Notices Received From: 08/16/99 to 09/03/99

Case No.	Received Date	Projected Notice End Date	Manufacturer/Importer	Use	Chemical
P–99–1208	08/17/99	11/15/99	Ricon Resins, Inc	(S) Coatings for metal, plastic glass; adhesives; inks; sealants; photoresists*	(S) 1,3-butadiene, homopolymer, maleated, 2-[(2-methyl-1-oxo-2-propenyl)oxy]ethyl esters*
P–99–1209	08/17/99	11/15/99	CBI	(G) Printing ink	(G) Alkyd resin
P–99–1210	08/17/99	11/15/99	Environmental Test Systems, Inc.	(G) Additive in a urine screening test	(S) 5-isoquinolinesulfonic acid*
P–99–1211	08/17/99	11/15/99	Bush Boake Allen Inc.	(S) Fragrance ingredient for perfumes, colognes, deoderants; fragrance ingredient for personal care; fragrance ingredient for cleaners; fragrance ingredient for soap	(S) Cyclohexanepropanol, beta-methyl*
P–99–1212	08/17/99	11/15/99	Bush Boake Allen Inc.	(S) Raw material for manufacturing (deodorants); fragrance ingredient for personal care; fragrance ingredient for cleaners; fragrance ingredient for soap	(S) Benzenepropanol, beta-methyl-*
P–99–1213	08/16/99	11/14/99	Petro-Canada America Inc.	(S) Chemical manufacturing; industrial process oils	(S) Gas oils (petroleum), vacuum, hydrocracked, hydroisomerized, hydrogenated, $c_{10–25}$, branched*
P–99–1214	08/16/99	11/14/99	Petro-Canada America Inc.	(S) Lubricant blending; rubber/plastics compounding; chemical manufacturing; other material processing	(S) Gas oils (petroleum), vacuum, hydrocracked, hydroisomerized, hydrogenated, $c_{15–30}$, branched, high viscosity index*
P–99–1215	08/16/99	11/14/99	Petro-Canada America Inc.	(S) Lubricant blending; rubber/plastics compounding; chemical manufacturing; other material processing	(S) Gas oils (petroleum), vacuum, hydrocracked, hydroisomerized, hydrogenated, $c_{20–40}$, branched, high viscosity index*
P–99–1216	08/16/99	11/14/99	Petro-Canada America Inc.	(S) Lubricant blending; rubber/plastics compounding; chemical manufacturing; other material processing	(S) Gas oils (petroleum), vacuum, hydrocracked, hydroisomerized, hydrogenated, $c_{25–55}$, branched, high viscosity index*
P–99–1217	08/16/99	11/14/99	CBI	(G) Pigment dispersant	(G) Amine neutralized phosphated polyester
P–99–1218	08/16/99	11/14/99	CBI	(G) Pigment dispersant	(G) Amine neutralized phosphated polyester
P–99–1219	08/19/99	11/17/99	Owens Corning	(G) Asphalt for roofing products	(S) Asphalt, polymer with butadiene and styrene*
P–99–1220	08/19/99	11/17/99	3M Company	(G) Coating additive	(S) Carbamic acid,[3-(triethoxysilyl)propyl]-, 2-hydroxypropyl ester; carbamic acid, [3-(triethoxysilyl)propyl]-, 2-hydroxy-1-methylethyl ester*
P–99–1221¶	08/19/99	11/17/99	3M Company	(G) Coating additive	(S) Carbamic acid,[3-(diethoxymethylsilyl)propyl]-, 2-hydroxypropyl ester; carbamic acid, [3-(diethoxymethylsilyl)propyl]-, 2-hydroxy-1-methylethyl ester*

I. 97 Premanufacture Notices Received From: 08/16/99 to 09/03/99—Continued

Case No.	Received Date	Projected Notice End Date	Manufacturer/Importer	Use	Chemical
P–99–1222	08/20/99	11/18/99	CBI	(G) Chemical intermediate	(G) Substituted benzoic acid ester
P–99–1223	08/20/99	11/18/99	Cook Composites & Polymers Co.	(S) Polymer base for metal finish topcoat	(G) Acrylic copolymer resin
P–99–1224	08/20/99	11/18/99	Cook Composites & Polymers Co.	(S) Polymer base for metal finish topcoat	(G) Acrylic copolymer resin
P–99–1225	08/20/99	11/18/99	Cook Composites & Polymers Co.	(S) Polymer base for metal finish topcoat	(G) Acrylic copolymer resin
P–99–1226	08/20/99	11/18/99	CBI	(G) Chemical intermediate	(G) Substituted benzoyl chloride
P–99–1227	08/23/99	11/21/99	S. C. Johnson & Son, Inc.	(S) Surface cleaning product; laundry treatment product	(G) Stabilized hypochlorite
P–99–1228	08/23/99	11/21/99	S. C. Johnson & Son, Inc.	(S) Surface cleaning product; laundry treatment product	(G) Stabilized hypochlorite
P–99–1229	08/24/99	11/22/99	3M Company	(G) Coating resin	(G) Styrene-acrylonitrile-based polymer
P–99–1230	08/25/99	11/23/99	CBI	(S) Industrial coatings	(S) 1,3-benzenedicarboxylic acid, polymer with 2-butyl-2-ethyl-1,3-propanediol, 1,4-cyclohexanedicarboxylic acid, 2-ethyl-2-(hydroxymethyl)-1,3-propanediol, hexanedioic acid and 1,3-isobenzofurandione, 2-hydroxy-3-[(1-oxoneodecyl)oxy]propyl ester, 2-oxobutanoate*
P–99–1231	08/25/99	11/23/99	Shin-Etsu Silicones of America, Inc	(S) Defoaming	(S) Siloxanes and silicones, di-me, me hydrogen, me pr, reaction products with polyethylene-polypropylene glycol allyl bu ether and polyethylene-polypropylene glycol monoally ether*
P–99–1232	08/25/99	11/23/99	3M Company	(G) Coating	(S) 2-propenoic acid, 2-methyl-, 2-hydroxyethyl ester, polymer with ethyl 2-propenoate, methyl 2-methyl-2-propenoate, oxiranylmethyl 2-methyl-2-propenoate and 2-propenenitrile*
P–99–1233	08/25/99	11/23/99	Saft America	(S) Additive for lithium-ion battery electrolyte	(S) 1,3-dioxol-2-one*
P–99–1234	08/26/99	11/24/99	CBI	(G) Open, non-dispersive use	(G) Epoxy ester urethane resin
P–99–1235	08/26/99	11/24/99	CBI	(S) Intermediate	(G) Epoxy ester resin
P–99–1236	08/26/99	11/24/99	Dainippon Ink and Chemicals, Inc.	(S) Uv curable resin for inks	(G) Polyurethane resin
P–99–1237	08/26/99	11/24/99	CIBA Specialty Chemicals Corporation	(G) Textile dye	(G) Arylsulfonic acid, 2-[[6-[[4-chloro-6-[[4-[[2-(substituted]phenyl]amino]-1,3,5-triazin-2-yl]amino]-1-hydroxy-3-sulfo-2-naphthalenyl]azo]-, sodium salt
P–99–1238	08/26/99	11/24/99	CIBA Specialty Chemicals Corporation	(G) Textile dye	(G) Arylsulfonic acid, 2-[[6-[[4-chloro-6-[[4-[[2-(substituted]phenyl]amino]-1,3,5-triazin-2-yl]amino]-1-hydroxy-3-sulfo-2-naphthalenyl]azo]-, sodium salt
P–99–1239	08/30/99	11/28/99	Union Carbide Corporation	(G) Catalyst	(G) Aluminum alkyls, reaction product with transition metal halide complex salt
P–99–1240	08/30/99	11/28/99	Union Carbide Corporation	(G) Catalyst	(G) Aluminum alkyls, reaction product with transition metal halide complex salt
P–99–1241	08/30/99	11/28/99	Union Carbide Corporation	(G) Catalyst	(G) Aluminum alkyls, reaction product with transition metal halide complex salt
P–99–1242	08/30/99	11/28/99	Union Carbide Corporation	(G) Catalyst	(G) Aluminum alkyls, reaction product with transition metal halide complex salt
P–99–1243	08/30/99	11/28/99	Union Carbide Corporation	(G) Catalyst	(G) Aluminum alkyls, reaction product with transition metal halide complex salt
P–99–1244	08/30/99	11/28/99	CBI	(G) Polymeric intermediate intended for destructive use	(G) Catechol-formaldehyde resin

I. 97 Premanufacture Notices Received From: 08/16/99 to 09/03/99—Continued

Case No.	Received Date	Projected Notice End Date	Manufacturer/Importer	Use	Chemical
P–99–1245	08/27/99	11/25/99	MG Generon	(G) Membrane material	(S) Carbonic dichloride, polymer with 4,4′-(9h-fluoren-9-ylidene)bis [2,6-dibromophenol]*
P–99–1246	08/27/99	11/25/99	CBI	(G) Open, non-dispersive use	(G) Amine soap
P–99–1247	08/27/99	11/25/99	CBI	(S) Base coat binder	(G) Polymonomeric polyurethane
P–99–1248	08/27/99	11/25/99	CBI	(S) Dispersant for use in lubricating oils	(G) Metalated reaction product of a carbonic acid compound of an aminated base with succinic anhydride, polyalkenyl derivatives
P–99–1249	08/31/99	11/29/99	CBI	(S) Inks; coatings	(G) Polyester acrylate
P–99–1250	08/30/99	11/28/99	Hi-tech Color, Inc.	(S) Thermal transfer sheet (back coating agent)	(G) Polyester polyol polyurethane and organopolysiloxane containing hydroxy group copolymer
P–99–1251	08/30/99	11/28/99	CBI	(G) Open non-dispersive (catalyst)	(G) Tin-ii-carboxylate
P–99–1252	08/30/99	11/28/99	CBI	(S) Curing agent for epoxy coatings and flooring systems	(G) Polyamine adducts
P–99–1253	08/30/99	11/28/99	CBI	(S) Curing agent for epoxy coatings and flooring systems	(G) Polyamine adducts
P–99–1254	08/31/99	11/29/99	CBI	(G) This intermediate process chemical (a sulfonated alkylate of (o)-xylene) is intended as feedstock for the preparation of the correspnding sodium salt. this sodium sulfonate is to be used in basic brine solutions to increase the recovery of crude oil from subterrainian oil resevoirs	(G) Sulfonic acid, linear xylene alkylate, mono
P–99–1255	08/31/99	11/29/99	CBI	(G) This intermediate process chemical (a sulfonated alkylate of (o)-xylene) is intended as feedstock for the preparation of the correspnding sodium salt. this sodium sulfonate is to be used in basic brine solutions to increase the recovery of crude oil from subterrainian oil resevoirs	(G) Sulfonic acid, linear xylene alkylate, mono
P–99–1256	08/31/99	11/29/99	CBI	(G) This intermediate process chemical (a sulfonated alkylate of (o)-xylene) is intended as feedstock for the preparation of the correspnding sodium salt. this sodium sulfonate is to be used in basic brine solutions to increase the recovery of crude oil from subterrainian oil resevoirs	(G) Sulfonic acid, linear xylene alkylate, mono
P–99–1257	08/31/99	11/29/99	CBI	(G) This intermediate process chemical (a sulfonated alkylate of (o)-xylene) is intended as feedstock for the preparation of the correspnding sodium salt. this sodium sulfonate is to be used in basic brine solutions to increase the recovery of crude oil from subterrainian oil resevoirs	(G) Sulfonic acid, linear xylene alkylate, mono
P–99–1258	08/31/99	11/29/99	CBI	(G) This intermediate process chemical (a sulfonated alkylate of (o)-xylene) is intended as feedstock for the preparation of the correspnding sodium salt. this sodium sulfonate is to be used in basic brine solutions to increase the recovery of crude oil from subterrainian oil resevoirs	(G) Sulfonic acid, linear xylene alkylate, mono

I. 97 Premanufacture Notices Received From: 08/16/99 to 09/03/99—Continued

Case No.	Received Date	Projected Notice End Date	Manufacturer/Importer	Use	Chemical
P–99–1259	08/31/99	11/29/99	CBI	(G) This intermediate process chemical (a sulfonated alkylate of (o)-xylene) is intended as feedstock for the preparation of the correspnding sodium salt. this sodium sulfonate is to be used in basic brine solutions to increase the recovery of crude oil from subterrainian oil resevoirs	(G) Sulfonic acid, linear xylene alkylate, mono
P–99–1260	08/31/99	11/29/99	CBI	(G) This intermediate process chemical (a sulfonated alkylate of (o)-xylene) is intended as feedstock for the preparation of the correspnding sodium salt. this sodium sulfonate is to be used in basic brine solutions to increase the recovery of crude oil from subterrainian oil resevoirs	(G) Sulfonic acid, linear xylene alkylate, mono
P–99–1261	08/31/99	11/29/99	CBI	(G) This intermediate process chemical (a sulfonated alkylate of (o)-xylene) is intended as feedstock for the preparation of the correspnding sodium salt. this sodium sulfonate is to be used in basic brine solutions to increase the recovery of crude oil from subterrainian oil resevoirs	(G) Sulfonic acid, linear xylene alkylate, mono
P–99–1262	08/31/99	11/29/99	CBI	(G) This intermediate process chemical (a sulfonated alkylate of (o)-xylene) is intended as feedstock for the preparation of the correspnding sodium salt. this sodium sulfonate is to be used in basic brine solutions to increase the recovery of crude oil from subterrainian oil resevoirs	(G) Sulfonic acid, linear xylene alkylate, mono
P–99–1263	08/31/99	11/29/99	CBI	(G) This intermediate process chemical (a sulfonated alkylate of (o)-xylene) is intended as feedstock for the preparation of the correspnding sodium salt. this sodium sulfonate is to be used in basic brine solutions to increase the recovery of crude oil from subterrainian oil resevoirs	(G) Sulfonic acid, linear xylene alkylate, mono
P–99–1264	08/31/99	11/29/99	CBI	(G) This commercial chemical (the sodium salt of a sulfonated alkylate of (o)-xylene) is intended as a ''down hole'' enhanced oil recovery surfactant used in basic brine solutions to increase the recovery of crude oil from subterrainian oil resevoirs. this material remains in the oil reserves strata and is not recovered.	(G) Sulfonic acid, linear xylene alkylate, mono, sodium salt
P–99–1265	08/31/99	11/29/99	CBI	(G) This commercial chemical (the sodium salt of a sulfonated alkylate of (o)-xylene) is intended as a ''down hole'' enhanced oil recovery surfactant used in basic brine solutions to increase the recovery of crude oil from subterrainian oil resevoirs. this material remains in the oil reserves strata and is not recovered.	(G) Sulfonic acid, linear xylene alkylate, mono, sodium salt

I. 97 Premanufacture Notices Received From: 08/16/99 to 09/03/99—Continued

Case No.	Received Date	Projected Notice End Date	Manufacturer/Importer	Use	Chemical
P–99–1266	08/31/99	11/29/99	CBI	(G) This commercial chemical (the sodium salt of a sulfonated alkylate of (o)-xylene) is intended as a ''down hole'' enhanced oil recovery surfactant used in basic brine solutions to increase the recovery of crude oil from subterrainian oil resevoirs. this material remains in the oil reserves strata and is not recovered.	(G) Sulfonic acid, linear xylene alkylate, mono, sodium salt
P–99–1267	08/31/99	11/29/99	CBI	(G) This commercial chemical (the sodium salt of a sulfonated alkylate of (o)-xylene) is intended as a ''down hole'' enhanced oil recovery surfactant used in basic brine solutions to increase the recovery of crude oil from subterrainian oil resevoirs. this material remains in the oil reserves strata and is not recovered.	(G) Sulfonic acid, linear xylene alkylate, mono, sodium salt
P–99–1268	08/31/99	11/29/99	CBI	(G) This commercial chemical (the sodium salt of a sulfonated alkylate of (o)-xylene) is intended as a ''down hole'' enhanced oil recovery surfactant used in basic brine solutions to increase the recovery of crude oil from subterrainian oil resevoirs. this material remains in the oil reserves strata and is not recovered.	(G) Sulfonic acid, linear xylene alkylate, mono, sodium salt
P–99–1269	08/31/99	11/29/99	CBI	(G) This intermediate process chemical (a normal alpha olefin alkylated (o)-xylene) is intended as feedstock for the preparation of the correspnding sulfonic acid. this acid will ultimately be coverted to its sodium salt to be used in basic brine solutions to increase the recovery of crude oil from subterrainian oil resevoirs.	(G) Linear xylene alkylate, mono
P–99–1270	08/31/99	11/29/99	CBI	(G) This intermediate process chemical (a normal alpha olefin alkylated (o)-xylene) is intended as feedstock for the preparation of the correspnding sulfonic acid. this acid will ultimately be coverted to its sodium salt to be used in basic brine solutions to increase the recovery of crude oil from subterrainian oil resevoirs.	(G) Linear xylene alkylate, mono
P–99–1271	08/31/99	11/29/99	CBI	(G) This intermediate process chemical (a normal alpha olefin alkylated (o)-xylene) is intended as feedstock for the preparation of the correspnding sulfonic acid. this acid will ultimately be coverted to its sodium salt to be used in basic brine solutions to increase the recovery of crude oil from subterrainian oil resevoirs.	(G) Linear xylene alkylate, mono

I. 97 Premanufacture Notices Received From: 08/16/99 to 09/03/99—Continued

Case No.	Received Date	Projected Notice End Date	Manufacturer/Importer	Use	Chemical
P–99–1272	08/31/99	11/29/99	CBI	(G) This intermediate process chemical (a normal alpha olefin alkylated (o)-xylene) is intended as feedstock for the preparation of the correspnding sulfonic acid. this acid will ultimately be coverted to its sodium salt to be used in basic brine solutions to increase the recovery of crude oil from subterrainian oil resevoirs.	(G) Linear xylene alkylate, mono
P–99–1273	08/31/99	11/29/99	CBI	(G) This intermediate process chemical (a normal alpha olefin alkylated (o)-xylene) is intended as feedstock for the preparation of the correspnding sulfonic acid. this acid will ultimately be coverted to its sodium salt to be used in basic brine solutions to increase the recovery of crude oil from subterrainian oil resevoirs.	(G) Linear xylene alkylate, mono
P–99–1274	08/31/99	11/29/99	CBI	(G) This intermediate process chemical (a normal alpha olefin alkylated (o)-xylene) is intended as feedstock for the preparation of the correspnding sulfonic acid. this acid will ultimately be coverted to its sodium salt to be used in basic brine solutions to increase the recovery of crude oil from subterrainian oil resevoirs.	(G) Linear xylene alkylate, mono
P–99–1275	08/31/99	11/29/99	CBI	(G) This intermediate process chemical (a normal alpha olefin alkylated (o)-xylene) is intended as feedstock for the preparation of the correspnding sulfonic acid. this acid will ultimately be coverted to its sodium salt to be used in basic brine solutions to increase the recovery of crude oil from subterrainian oil resevoirs.	(G) Linear xylene alkylate, mono
P–99–1276	08/31/99	11/29/99	CBI	(G) This intermediate process chemical (a normal alpha olefin alkylated (o)-xylene) is intended as feedstock for the preparation of the correspnding sulfonic acid. this acid will ultimately be coverted to its sodium salt to be used in basic brine solutions to increase the recovery of crude oil from subterrainian oil resevoirs.	(G) Linear xylene alkylate, mono
P–99–1277	08/31/99	11/29/99	CBI	(G) This intermediate process chemical (a normal alpha olefin alkylated (o)-xylene) is intended as feedstock for the preparation of the correspnding sulfonic acid. this acid will ultimately be coverted to its sodium salt to be used in basic brine solutions to increase the recovery of crude oil from subterrainian oil resevoirs.	(G) Linear xylene alkylate, mono

I. 97 Premanufacture Notices Received From: 08/16/99 to 09/03/99—Continued

Case No.	Received Date	Projected Notice End Date	Manufacturer/Importer	Use	Chemical
P–99–1278	08/31/99	11/29/99	CBI	(G) This intermediate process chemical (a normal alpha olefin alkylated (o)-xylene) is intended as feedstock for the preparation of the correspnding sulfonic acid. this acid will ultimately be coverted to its sodium salt to be used in basic brine solutions to increase the recovery of crude oil from subterrainian oil resevoirs.	(G) Linear xylene alkylate, mono
P–99–1279	08/31/99	11/29/99	CBI	(G) This commercial chemical (the sodium salt of a sulfonated alkylate of (o)-xylene) is intended as a ''down hole'' enhance oil recovery surfactant used in basic brine solutions to increased the recovery of crude oil from subterrainian oil resevoirs. this material remains in the oil reserves strata and is not recovered	(G) Sulfonic acid, linear xylene alkyate, mono, sodium salt*
P–99–1280	08/31/99	11/29/99	CBI	(G) This commercial chemical (the sodium salt of a sulfonated alkylate of (o)-xylene) is intended as a ''down hole'' enhance oil recovery surfactant used in basic brine solutions to increased the recovery of crude oil from subterrainian oil resevoirs. this material remains in the oil reserves strata and is not recovered	(G) Sulfonic acid, linear xylene alkyate, mono, sodium salt*
P–99–1281	08/31/99	11/29/99	CBI	(G) This commercial chemical (the sodium salt of a sulfonated alkylate of (o)-xylene) is intended as a ''down hole'' enhance oil recovery surfactant used in basic brine solutions to increased the recovery of crude oil from subterrainian oil resevoirs. this material remains in the oil reserves strata and is not recovered	(G) Sulfonic acid, linear xylene alkyate, mono, sodium salt*
P–99–1282	08/31/99	11/29/99	CBI	(G) This commercial chemical (the sodium salt of a sulfonated alkylate of (o)-xylene) is intended as a ''down hole'' enhance oil recovery surfactant used in basic brine solutions to increased the recovery of crude oil from subterrainian oil resevoirs. this material remains in the oil reserves strata and is not recovered	(G) Sulfonic acid, linear xylene alkyate, mono, sodium salt*
P–99–1283	08/31/99	11/29/99	CBI	(G) This commercial chemical (the sodium salt of a sulfonated alkylate of (o)-xylene) is intended as a ''down hole'' enhance oil recovery surfactant used in basic brine solutions to increased the recovery of crude oil from subterrainian oil resevoirs. this material remains in the oil reserves strata and is not recovered	(G) Sulfonic acid, linear xylene alkyate, mono, sodium salt*
P–99–1284	08/31/99	11/29/99	Eastman Kodak Company	(G) Chemical intermediate, destructive use	(G) Substituted benzenesulfonyl chloride*
P–99–1285	08/31/99	11/29/99	Eastman Kodak Company	(G) Chemical intermediate, destructive use	(G) Substituted benzenesulfinic acid salt
P–99–1286	08/31/99	11/29/99	Vianova Resins Incorporated	(G) Pigment grinding resin	(G) Condensation of an acrylic modified alkyd resin and urea resin
P–99–1287	08/31/99	11/29/99	Octel America, Inc.	(S) Gasoline fuel additive (this pmn chemical is destroyed when burnt in gasoline in use.)	(G) Polyalkylenamine

I. 97 Premanufacture Notices Received From: 08/16/99 to 09/03/99—Continued

Case No.	Received Date	Projected Notice End Date	Manufacturer/Importer	Use	Chemical
P–99–1288	09/01/99	11/30/99	Eastman Kodak Company	(G) Chemical intermediate, destructive use	(G) Substitutedanilino halobenzamide
P–99–1289	09/01/99	11/30/99	CBI	(S) Polyol for polyester intermediate	(G) Polyether polycarbonate diol
P–99–1290	09/01/99	11/30/99	Eastman Kodak Company	(G) Contained use in imaging products	(G) Substituted hydroxyphenyl halosubstituted benzamide
P–99–1291	09/01/99	11/30/99	Westvaco Corporation - Chemical Division	(S) Hydrocarbon resin for lithographic inks	(G) Rosin modified fatty acids, tall-oil, polymer with glycerol, phenols, petroleum naphtha conc. maleic anhydride and petroleum distillates
P–99–1292	09/01/99	11/30/99	Westvaco Corporation - Chemical Division	(S) Hydrocarbon resin for lithographic inks	(G) Rosin modified fatty acids, tall-oil, polymer with glycerol, phenols, petroleum naphtha, maleic anhydride and petroleum distillates
P–99–1293	09/01/99	11/30/99	Westvaco Corporation - Chemical Division	(S) Hydrocarbon resin for lithographic inks	(G) Rosin modified fatty acids, tall-oil, polymer with glycerol, phenols, aromatic hydrocarbons, maleic anhydride and petroleum distillates
P–99–1294	09/03/99	12/02/99	CBI	(S) Inks coatings	(G) Polyester acrylate
P–99–1295	09/03/99	12/02/99	CIBA Specialty Chemicals Corporation	(S) Isolated intermediate for the manufacture of oxirane, [(1,1-dimethylethoxy)methyl]- casrn 7665–72–7 (aka-gbe)	(G) Chlorinated hydroxy-ether
P–99–1296	09/03/99	12/02/99	Eastman Kodak Company	(G) Chemical intermediate, destructive use	(G) Substituted phenyl butanoic acid
P–99–1297	09/03/99	12/02/99	CBI	(S) Additive for industrial coating	(G) Organo siliconate
P–99–1298	09/03/99	12/02/99	BASF Corp	(S) Industrial base material for chemical manufacture	(S) Alcohols, $c_{13–15}$, branched and linear*
P–99–1299	09/03/99	12/02/99	CBI	(G) Non-dispersive use	(G) Amino epoxy silane
P–99–1300	09/03/99	12/02/99	Eastman Kodak Company	(G) Chemical intermediate, destructive use	(G) Substituted phenyl butanoyl chloride
P–99–1301	09/03/99	12/02/99	Eastman Kodak Company	(G) Chemical intermediate, destructive use	(G) Phenyl substituted butanoic acid ester
P–99–1302	09/03/99	12/02/99	CBI	(G) Processing additive	(G) Substituted anthraquinone
P–99–1303	09/03/99	12/02/99	Eastman kodak company	(G) Contained use in imaging products	(G) Substituted hydroxyhalophenyl halobenzamide
P–99–1304	08/31/99	11/29/99	Eastman Kodak Company	(G) Chemical intermediate, destructive use	(G) Substituted benzenesulfonic acid salt

In table II, EPA provides the following information (to the extent that such information is not claimed as CBI) on the Notices of Commencement to manufacture received:

II. 55 Notices of Commencement From: 08/16/99 to 09/03/99

Case No.	Received Date	Commencement/Import Date	Chemical
P–94–1645	08/20/99	11/25/98	(G) Amine modified polyether alcohol
P–97–0040	08/19/99	03/05/99	(G) Vinylalkylalkoxysilane
P–97–0744	08/26/99	05/26/99	(S) Castor oil, hydrogenated, ethoxylated, triisooctadecanoate*
P–97–0915	09/03/99	08/02/99	(G) Acetoacetate oligomer
P–97–0989	08/24/99	08/16/99	(G) Polyalkanolamide
P–98–0002	08/20/99	04/30/99	(G) Metal oxide
P–98–0127	08/20/99	01/14/99	(G) Methine blue dye
P–98–0128	08/20/99	01/14/99	(G) Methine blue dye
P–98–0143	08/23/99	07/21/99	(G) Polyester polyurethane acrylic copolymer
P–98–0553	08/16/99	02/02/99	(G) Substance (3) polyether succinate, compd. with mixed amines
P–98–0717	08/30/99	08/19/99	(G) Quaternary salt of a functionalized pyridine
P–98–0823	08/31/99	08/23/99	(S) 12-aminododecanoic acid*
P–98–0839	08/19/99	05/03/99	(G) Acrylic resin
P–98–0862	08/23/99	07/21/99	(G) Polyester polyurethane
P–98–0934	08/27/99	05/22/99	(S) Benzenamine, *n*-[4-[(1,3-dimethylbutyl)imino]-2,5-cyclohexadien-1-ylidene]-*
P–98–1027	09/03/99	08/20/99	(S) 2,5-furandione, polymer with 2,4,4-trimethyl-1-pentene, ester with polyethylene glycol mono-$c_{12–14}$-alkyl ethers, sodium salt*
P–98–1053	08/23/99	07/21/99	(G) Polyester polyurethane
P–98–1262	09/01/99	08/02/99	(G) Aromatic substituted diurea

II. 55 Notices of Commencement From: 08/16/99 to 09/03/99—Continued

Case No.	Received Date	Commencement/Import Date	Chemical
P–99–0093	08/31/99	05/19/99	(S) 1,4-dioxa-7,9-dithia-8-stannacycloundecane-511-dione, 8,8-dioctyl-(9ci)*
P–99–0127	08/19/99	08/12/99	(G) Silicone polymer
P–99–0147	08/31/99	08/23/99	(G) Metal organic compound
P–99–0163	08/30/99	08/12/99	(G) Amine functional epoxy based resin salted with an organic acid
P–99–0270	08/24/99	07/06/99	(G) Pentyl 2,5-bis[[4-[[substituted]] benzoyl]oxy]-benzoate
P–99–0271	08/24/99	07/06/99	(G) 4,4′-bis(4-(6-(1-oxo-2-propenyloxy)hexyloxy)-benzoyloxy)cyclohexylbenzene
P–99–0304	08/27/99	04/06/99	(G) Polyurethane elastomer
P–99–0318	08/25/99	05/17/99	(G) Metal sulfide ammonium salt
P–99–0331	09/01/99	07/21/99	(G) 4-amino-5-hydroxy-6-phenylazo-3-substituted phenyl azo-naphthalene disulfonic acid
P–99–0335	08/20/99	05/18/99	(S) 3-hexen-1-ol, 2-methyl-2-(3-methyl-2-butenyl)-*
P–99–0389	08/31/99	08/23/99	(G) Alkyd resin
P–99–0398	08/26/99	08/19/99	(G) Polyester/ acrylic copolymer
P–99–0401	08/19/99	05/17/99	(G) Polyester resin
P–99–0421	08/30/99	05/24/99	(G) Reaction product of: phenolic resin - cyclic aliphatic alcohols, trimellitic anhydride and aliphatic carbonates
P–99–0423	08/31/99	08/09/99	(G) Polyalkylene oxide dialkylamine
P–99–0455	08/26/99	06/16/99	(G) Water soluble alkyd resin
P–99–0532	08/23/99	08/12/99	(G) Partially silylated isocyanate oligomer
P–99–0533	08/23/99	08/12/99	(G) Silylated polyetherisocyanate oligomer
P–99–0539	08/25/99	06/08/99	(G) Propanenitrile, 3-[[4-[(substituted)azo]phenyl](substituted)amino]-*
P–99–0544	08/17/99	08/02/99	(S) Fatty acids, tall-oil, compounds with 2-(2-aminoethoxy)ethanol*
P–99–0548	08/17/99	07/27/99	(S) Fatty acids, castor-oil, compounds with 2-(2-aminoethoxy) ethanol*
P–99–0574	09/03/99	08/31/99	(G) N-alkyl modified polyisocyanate, reaction products with diamine
P–99–0576	08/23/99	07/21/99	(G) Polyester polyurethane
P–99–0587	08/31/99	08/24/99	(S) Nonaanoic acid, compd. with 2-(2-aminoethoxy)ethanol (1:1)*
P–99–0588	08/17/99	07/19/99	(S) Boric acid (h3bo3), compd. with 2-(2-aminoethoxy)ethanol (1:1)*
P–99–0589	08/23/99	08/14/99	(G) Phosphorus chloride derivative
P–99–0590	08/25/99	06/25/99	(G) Naphthalene sulfonic acid derivative
P–99–0643	08/30/99	08/20/99	(G) Polyether modified polysiloxane
P–99–0645	08/17/99	07/28/99	(G) Amidoamine modified polyethylene glycol
P–99–0681	08/17/99	07/27/99	(G) Carboxylated polyethylene glycol
P–99–0727	09/02/99	08/25/99	(G) Aromatic polyurethane
P–99–0732	08/30/99	08/03/99	(G) Benzofuranone, [alkylsubstituted]-2-substituted-benzofuranylidene-[alkylsubstituted]
P–99–0750	08/16/99	07/28/99	(G) Acrylic polymer
P–99–0771	08/24/99	08/04/99	(G) Modified phenolic acrylic resin
P–99–0788	09/01/99	08/11/99	(G) Polyester polyol
P–99–0789	09/01/99	08/11/99	(G) Polyester polyol
P–99–0790	09/01/99	08/11/99	(G) Polyester polyol

List of Subjects

Environmental protection, Premanufacture notices.

Dated: September 29, 1999.

Oscar Morales,

Acting Director, Information Management Division, Office of Pollution Prevention and Toxics.

[FR Doc. 99–26074 Filed 10–5–99; 8:45 am]

BILLING CODE 6560–50–F

ENVIRONMENTAL PROTECTION AGENCY

[OPPTS–59366; FRL–6384–6]

Approval of Test Marketing Exemption for a Certain New Chemical

AGENCY: Environmental Protection Agency (EPA).

ACTION: Notice.

SUMMARY: This notice announces EPA's approval of an application for test marketing exemption (TME) under section 5(h)(1) of the Toxic Substances Control Act (TSCA) and 40 CFR 720.38. EPA has designated this application as TME–99–1. The test marketing conditions are described in the TME application and in this notice.

DATES: Approval of this TME is effective on September 28, 1999.

FOR FURTHER INFORMATION CONTACT: For general information contact: Joseph S. Carra, Acting Division Director, Environmental Assistance Division (7408), Office of Pollution Prevention and Toxics, Environmental Protection Agency, 401 M St., SW., Washington, DC 20460; telephone number: (202) 554–1815 and TDD: (202) 554–0551; and e-mail address: TSCA-Hotline@epa.gov.

For technical information contact: Adella Watson, New Chemicals Notice Management Branch, Chemical Control Division (7405), Office of Pollution Prevention and Toxics, Environmental Protection Agency, 401 M St., SW., Washington, DC 20460; telephone number: (202) 260–3752; and e-mail address: watson.adella@epa.gov.

SUPPLEMENTARY INFORMATION:

I. Does this Action Apply to Me?

This action is directed in particular to the chemical manufacturer and/or importer who submitted the TME to EPA. This action may, however, be of interest to the public in general. Since other entities may also be interested, the Agency has not attempted to describe all the specific entities that may be affected by this action. If you have any questions

regarding the applicability of this action to a particular entity, consult the person listed in the ''FOR FURTHER INFORMATION CONTACT'' section.

II. How Can I Get Additional Information, Including Copies of this Document or Other Related Documents?

A. *Electronically*. You may obtain electronic copies of this document, and certain other related documents that might be available electronically, from the EPA Internet Home Page at http://www.epa.gov/. To access this document, on the Home Page select ''Laws and Regulations'' and then look up the entry for this document under the ''**Federal Register**--Environmental Documents.'' You can also go directly to the **Federal Register** listings at http://www.epa.gov/fedrgstr/.

B. *In person*. The Agency has established an official record for this action under docket control number OPPTS–59366. The official record consists of the documents specifically referenced in this action, any public comments received during an applicable comment period, and other information related to this action, including any information claimed as confidential business information (CBI). This official record includes the documents that are physically located in the docket, as well as the documents that are referenced in those documents. The public version of the official record does not include any information claimed as CBI. The public version of the official record, which includes printed, paper versions of any electronic comments submitted during an applicable comment period, is available for inspection in the TSCA Nonconfidential Information Center, North East Rm. B-607, Waterside Mall, 401 M St., SW., Washington, DC. The Center is open from noon to 4 p.m., Monday through Friday, excluding legal holidays. The telephone number for the Center is (202) 260–7099.

III. What is the Agency's Authority for Taking this Action?

Section 5(h)(1) of TSCA and 40 CFR 720.38 authorize EPA to exempt persons from premanufacture notification (PMN) requirements and permit them to manufacture or import new chemical substances for test marketing purposes, if the Agency finds that the manufacture, processing, distribution in commerce, use, and disposal of the substances for test marketing purposes will not present an unreasonable risk of injury to health or the environment. EPA may impose restrictions on test marketing activities and may modify or revoke a test marketing exemption upon receipt of new information which casts significant doubt on its finding that the test marketing activity will not present an unreasonable risk of injury.

IV. What Action is the Agency Taking?

EPA has approved the above-referenced TME. EPA has determined that test marketing the new chemical substance, under the conditions set out in the TME application and in this notice, will not present any unreasonable risk of injury to health or the environment.

V. What Restrictions Apply to this TME?

The test market time period, production volume, number of customers, and use must not exceed specifications in the application and this notice. All other conditions and restrictions described in the application and in this notice must also be met.

TME 99–1

Date of Receipt: February 2, 1999.

Notice of Receipt: March 22, 1999 (64 FR 13792).

Applicant: Reichhold Inc.

Chemical: (G) Acrylic modified polyurethane polymer.

Use: (G) Adhesive.

Production Volume: CBI.

Number of Customers: 4.

Test Marketing Period: 365 days, commencing on first day of commercial manufacture.

The following additional restrictions apply to this TME. A bill of lading accompanying each shipment must state that the use of the substance is restricted to that approved in the TME. In addition, the applicant shall maintain the following records until 5 years after the date they are created, and shall make them available for inspection or copying in accordance with section 11 of TSCA:

1. Records of the quantity of the TME substance produced and the date of manufacture.

2. Records of dates of the shipments to each customer and the quantities supplied in each shipment.

3. Copies of the bill of lading that accompanies each shipment of the TME substance.

VI. What was EPA's Risk Assessment for this TME?

EPA identified no significant health or environmental concerns for the test market substance. Therefore, the test market activities will not present any unreasonable risk of injury to human health or the environment.

VII. Can EPA Change Its Decision on this TME in the Future?

Yes. The Agency reserves the right to rescind approval or modify the conditions and restrictions of an exemption should any new information that comes to its attention cast significant doubt on its finding that the test marketing activities will not present any unreasonable risk of injury to human health or the environment.

List of Subjects

Environmental protection, Test marketing exemptions.

Dated: September 28, 1999.

Flora Chow,

Chief, New Chemicals Notice Management Branch, Office of Pollution Prevention and Toxics.

[FR Doc. 99–26076 Filed 10–5–99; 8:45 am]

BILLING CODE 6560–50–F

FEDERAL COMMUNICATIONS COMMISSION

Notice of Public Information Collection(s) Being Submitted to OMB for Review and Approval

September 28, 1999.

SUMMARY: The Federal Communications Commission, as part of its continuing effort to reduce paperwork burden invites the general public and other Federal agencies to take this opportunity to comment on the following information collection, as required by the Paperwork Reduction Act of 1995, Public Law 104–13. An agency may not conduct or sponsor a collection of information unless it displays a currently valid control number. No person shall be subject to any penalty for failing to comply with a collection of information subject to the Paperwork Reduction Act (PRA) that does not display a valid control number. Comments are requested concerning: (a) Whether the proposed collection of information is necessary for the proper performance of the functions of the Commission, including whether the information shall have practical utility; (b) the accuracy of the Commission's burden estimate; (c) ways to enhance the quality, utility, and clarity of the information collected; and (d) ways to minimize the burden of the collection of information on the respondents, including the use of automated collection techniques or other forms of information technology.

DATES: Written comments should be submitted on or before November 5,

1999. If you anticipate that you will be submitting comments, but find it difficult to do so within the period of time allowed by this notice, you should advise the contact listed below as soon as possible.

ADDRESSES: Direct all comments to Les Smith, Federal Communications Commission, Room 1–A804, 445 12th Street, SW, Washington, DC 20554 or via the Internet to lesmith@fcc.gov.

FOR FURTHER INFORMATION CONTACT: For additional information or copies of the information collections contact Les Smith at (202) 418–0217 or via the Internet at lesmith@fcc.gov.

SUPPLEMENTARY INFORMATION:

OMB Control Number: 3060–0703.

Title: Determining Costs of Regulated Cable Equipment and Installation.

Form Number: FCC 1205.

Type of Review: Extension of a currently approved collection.

Respondents: Business or other for-profit entities; State, Local, or Tribal Government.

Number of Respondents: 4,000.

Estimate Time Per Response: 4 to 12 hrs.

Frequency of Response: Recordkeeping; On occasion reporting requirements.

Total Annual Burden: 50,800 hours.

Total Annual Costs: $900.00.

Needs and Uses: Information derived from FCC Form 1205 filings is used to facilitate the review of equipment and installation rates. This information is then reviewed by each cable system's respective local franchising authority. Section 76.923 records are kept by cable operators in order to demonstrate that charges for the sale and lease of equipment for installation have been developed in accordance with the Commission's rules.

Federal Communications Commission.

Magalie Roman Salas,

Secretary.

[FR Doc. 99–25885 Filed 10–5–99; 8:45 am]

BILLING CODE 6712–01–P

FEDERAL COMMUNICATIONS COMMISSION

Notice of Public Information Collection(s) Being Submitted to OMB for Review and Approval

September 29, 1999.

SUMMARY: The Federal Communications Commission, as part of its continuing effort to reduce paperwork burden invites the general public and other Federal agencies to take this opportunity to comment on the following information collection, as required by the Paperwork Reduction Act of 1995, Public Law 104–13. An agency may not conduct or sponsor a collection of information unless it displays a currently valid control number. No person shall be subject to any penalty for failing to comply with a collection of information subject to the Paperwork Reduction Act (PRA) that does not display a valid control number. Comments are requested concerning: (a) Whether the proposed collection of information is necessary for the proper performance of the functions of the Commission, including whether the information shall have practical utility; (b) the accuracy of the Commission's burden estimate; (c) ways to enhance the quality, utility, and clarity of the information collected; and (d) ways to minimize the burden of the collection of information on the respondents, including the use of automated collection techniques or other forms of information technology.

DATES: Written comments should be submitted on or before November 5, 1999. If you anticipate that you will be submitting comments, but find it difficult to do so within the period of time allowed by this notice, you should advise the contact listed below as soon as possible.

ADDRESSES: Direct all comments to Les Smith, Federal Communications Commission, Room 1–A804, 445 12th Street, SW, Washington, DC 20554 or via the Internet to lesmith@fcc.gov.

FOR FURTHER INFORMATION CONTACT: For additional information or copies of the information collections contact Les Smith at (202) 418–0217 or via the Internet at lesmith@fcc.gov.

SUPPLEMENTARY INFORMATION:

OMB Control Number: 3060–0740.

Title: Section 95.1015, Disclosure Policies.

Form Number: N/A.

Type of Review: Extension of a currently approved collection.

Respondents: Business or other for-profit entities.

Number of Respondents: 203.

Estimate Time Per Response: 1 hour.

Frequency of Response: On occasion reporting requirements; Third party disclosure.

Total Annual Burden: 203 hours.

Total Annual Costs: $10,000.

Needs and Uses: This collection of information is made necessary by the amendments of the Commission's Rules regarding the Low Power Radio and Automated Maritime Telecommunications System (AMTS) operations in the 216–217 MHz band. The reporting requirement is necessary to ensure that television stations that may be affected by the harmful interference from AMTS operations are notified. Manufacturers of LPRS equipment are required to include a statement regarding the use of the equipment. The information will be used by the Commission staff and affected television stations in order to be aware of the location of potential harmful interference from AMTS operations.

Federal Communications Commission.

Magalie Roman Salas,

Secretary.

[FR Doc. 99–25886 Filed 10–5–99; 8:45 am]

BILLING CODE 6712–01–P

FEDERAL COMMUNICATIONS COMMISSION

Notice of Public Information Collection(s) Submitted to OMB for Review and Approval

September 28, 1999.

SUMMARY: The Federal Communications Commission, as part of its continuing effort to reduce paperwork burden invites the general public and other Federal agencies to take this opportunity to comment on the following information collection(s), as required by the Paperwork Reduction Act of 1995, Public Law 104–13. An agency may not conduct or sponsor a collection of information unless it displays a currently valid control number. No person shall be subject to any penalty for failing to comply with a collection of information subject to the Paperwork Reduction Act (PRA) that does not display a valid control number. Comments are requested concerning (a) Whether the proposed collection of information is necessary for the proper performance of the functions of the Commission, including whether the information shall have practical utility; (b) the accuracy of the Commission's burden estimate; (c) ways to enhance the quality, utility, and clarity of the information collected; and (d) ways to minimize the burden of the collection of information on the respondents, including the use of automated collection techniques or other forms of information technology.

DATES: Written comments should be submitted on or before November 5, 1999. If you anticipate that you will be submitting comments, but find it difficult to do so within the period of time allowed by this notice, you should advise the contact listed below as soon as possible.

ADDRESSES: Direct all comments to Judy Boley, Federal Communications

Commission, Room 1–C804, 445 12th Street, SW, Washington, DC 20554 or via the Internet to jboley@fcc.gov.

FOR FURTHER INFORMATION CONTACT: For additional information or copies of the information collection(s), contact Judy Boley at 202–418–0214 or via the Internet at jboley@fcc.gov.

SUPPLEMENTARY INFORMATION:

OMB Control No.: 3060–0741.

Title: Implementation of the Local Competition Provisions of the Telecommunications Act of 1996, CC Docket 96–98, Second Report and Order and Memorandum Opinion and Order, Second Order on Reconsideration.

Form No.: N/A.

Type of Review: Revision of a currently approved collection.

Respondents: Business or other for-profit.

Number of Respondents: 2,000.

Estimated Time Per Response: 1–100 hours per respondent.

Frequency of Response: On occasion reporting requirement, third party disclosure requirement.

Total Annual Burden: 228,750 hours.

Total Annual Cost: $60,000.

Needs and Uses: In the Second Order on Reconsideration, the Commission resolves and clarifies specific issues regarding the nondiscriminatory access obligations of local exchange carriers. The Commission clarified that, upon request, a LEC shall provide access to its directory assistance services and to its directory listings in any format the competing provider specifies, if the LEC's internal systems can accommodate the format. LEC's must supply updates. In the NPRM, the Commission sought comment on issues arising out of developments in, and the convergence of, directory publishing and directory assistance.

In order to encourage competition in the telecommunications services market by lifting operational barriers to entry, the Commission has: (1) Required LECs to provide dialing parity and nondiscriminatory access to certain services and functionalities; (2) required ILECs to provide public notice of network changes; and (3) established procedures for numbering administration. These information collection requirements are part of an effort to make local dialing and networks, telephone numbers, operator services, directory assistance and directory listings available to all competitors on an equal basis. Implementation plans describing each LEC's proposal(s) to implement toll dialing parity based on LATA boundaries will be provided by the LECs to the state commissions or to this Commission. Justifications for noncompliance with toll dialing parity deadlines will be provided to the Commission. Directory listings and the public notice of network changes will be provided to third parties. Technical information regarding interconnection and/or access to unbundled network elements will be provided by ILECs to requesting telecommunication carriers. Burden of proof documentation regarding access to a LEC's services and features or dialing delay will be provided to the Commission. Area code relief plans will be provided by state commissions to the central office code administrator(s).

The Commission has concluded in the Second Order on Reconsideration that a LEC shall permit competing providers of telephone exchange service and telephone toll service access to its directory assistance services, including directory assistance databases. The Commission clarified that, upon request, a LEC shall provide access to its directory assistance services, including directory assistance databases, and to its directory listings in any format the competing provider specifies, if the LEC's internal systems can accommodate that format. In addition, LECs must supply updates to the requesting LEC in the same manner as the original transfer and at the same time that it provides updates to itself. These information collection requirements are part of an effort to make directory assistance and directory listings available to all competitors on an equal basis.

Federal Communications Commission.

Magalie Roman Salas,

Secretary.

[FR Doc. 99–25887 Filed 10–5–99; 8:45 am]

BILLING CODE 6712–01–P

FEDERAL DEPOSIT INSURANCE CORPORATION

Agency Information Collection Activities: Proposed Collection; Comment Request

AGENCY: Federal Deposit Insurance Corporation (FDIC).

ACTION: Notice and request for comment.

SUMMARY: The FDIC, as part of its continuing effort to reduce paperwork and respondent burden, invites the general public and other Federal agencies to take this opportunity to comment on proposed and/or continuing information collections, as required by the Paperwork Reduction Act of 1995 (44 U.S.C. chapter 35). Currently, the FDIC is soliciting comments concerning an information collection titled ''Interagency Biographical and Financial Report.''

DATES: Comments must be submitted on or before December 6, 1999.

ADDRESSES: Interested parties are invited to submit written comments to Tamara R. Manly, Management Analyst (Regulatory Analysis), (202) 898–7453, Office of the Executive Secretary, Room 4058, Attention: Comments/OES, Federal Deposit Insurance Corporation, 550 17th Street NW, Washington, DC 20429. All comments should refer to ''Interagency Biographical and Financial Report.'' Comments may be hand-delivered to the guard station at the rear of the 17th Street Building (located on F Street), on business days between 7 a.m. and 5 p.m. (FAX number (202) 898–3838; Internet address: comments@fdic.gov).

A copy of the comments may also be submitted to the OMB desk officer for the FDIC: Alexander Hunt, Office of Information and Regulatory Affairs, Office of Management and Budget, New Executive Office Building, Room 3208, Washington, DC 20503.

FOR FURTHER INFORMATION CONTACT: Tamara R. Manly, at the address identified above.

SUPPLEMENTARY INFORMATION:

Proposal To Renew the Following Currently Approved Collection of Information

Title: Interagency Biographical and Financial Report.

OMB Number: 3064–0006.

Frequency of Response: On occasion.

Affected Public: All financial institutions.

Estimated Number of Respondents: 2,200.

Estimated Time per Response: 4 hours.

Estimated Total Annual Burden: 8,800 hours.

General Description of Collection: The Interagency Biographical and Financial Report is submitted to the FDIC by each individual director or officer of a proposed or operating financial institution applying for federal deposit insurance as a state nonmember bank. The information is used by the FDIC to evaluate the general character of bank management as required by the Federal Deposit Insurance Act.

Request for Comment

Comments are invited on: (a) Whether the collection of information is necessary for the proper performance of the FDIC's functions, including whether the information has practical utility; (b)

The accuracy of the estimates of the burden of the information collection, including the validity of the methodology and assumptions used; (c) Ways to enhance the quality, utility, and clarity of the information to be collected; and (d) Ways to minimize the burden of the information collection on respondents, including through the use of automated collection techniques or other forms of information technology.

At the end of the comment period, the comments and recommendations received will be analyzed to determine the extent to which the collection should be modified prior to submission to OMB for review and approval. Comments submitted in response to this notice also will be summarized or included in the FDIC's requests to OMB for renewal of this collection. All comments will become a matter of public record.

Dated at Washington, D.C., this 29th day of September 1999.

Federal Deposit Insurance Corporation.

Robert E. Feldman,

Executive Secretary.

[FR Doc. 99–26058 Filed 10–5–99; 8:45 am]

BILLING CODE 6714–01–P

FEDERAL DEPOSIT INSURANCE CORPORATION

Agency Information Collection Activities: Proposed Collection; Comment Request

AGENCY: Federal Deposit Insurance Corporation (FDIC).

ACTION: Notice and request for comment.

SUMMARY: The FDIC, as part of its continuing effort to reduce paperwork and respondent burden, invites the general public and other Federal agencies to take this opportunity to comment on proposed and/or continuing information collections, as required by the Paperwork Reduction Act of 1995 (44 U.S.C. chapter 35). Currently, the FDIC is soliciting comments concerning an information collection titled ''Interagency Notice of Change in Control.''

DATES: Comments must be submitted on or before December 6, 1999.

ADDRESSES: Interested parties are invited to submit written comments to Tamara R. Manly, Management Analyst (Regulatory Analysis), (202) 898–7453, Office of the Executive Secretary, Room 4058, Attention: Comments/OES, Federal Deposit Insurance Corporation, 550 17th Street NW, Washington, DC 20429. All comments should refer to ''Interagency Notice of Change in Control.'' Comments may be hand-delivered to the guard station at the rear of the 17th Street Building (located on F Street), on business days between 7 a.m. and 5 p.m. (FAX number (202) 898–3838; Internet address: comments@fdic.gov).

A copy of the comments may also be submitted to the OMB desk officer for the FDIC: Alexander Hunt, Office of Information and Regulatory Affairs, Office of Management and Budget, New Executive Office Building, Room 3208, Washington, DC 20503.

FOR FURTHER INFORMATION CONTACT: Tamara R. Manly, at the address identified above.

SUPPLEMENTARY INFORMATION:

Proposal To Renew the Following Currently Approved Collection of Information

Title: Interagency Notice of Change in Control.

OMB Number: 3064–0019.

Frequency of Response: On occasion.

Affected Public: All financial institutions.

Estimated Number of Respondents: 50.

Estimated Time per Response: 30 hours.

Estimated Total Annual Burden: 1,500 hours.

General Description of Collection: The Interagency Notice of Change in Control is submitted regarding any person proposing to acquire ownership control of an insured state nonmember bank. The information is used by the FDIC to determine whether the competence, experience, or integrity of any acquiring person, indicates that it would not be in the interest of the depositors of the bank or in the interest of the public, to permit such persons to control the bank.

Request for Comment

Comments are invited on: (a) Whether the collection of information is necessary for the proper performance of the FDIC's functions, including whether the information has practical utility; (b) The accuracy of the estimates of the burden of the information collection, including the validity of the methodology and assumptions used; (c) Ways to enhance the quality, utility, and clarity of the information to be collected; and (d) Ways to minimize the burden of the information collection on respondents, including through the use of automated collection techniques or other forms of information technology.

At the end of the comment period, the comments and recommendations received will be analyzed to determine the extent to which the collection should be modified prior to submission to OMB for review and approval. Comments submitted in response to this notice also will be summarized or included in the FDIC's requests to OMB for renewal of this collection. All comments will become a matter of public record.

Dated at Washington, D.C., this 29th day of September, 1999.

Federal Deposit Insurance Corporation.

Robert E. Feldman,

Executive Secretary.

[FR Doc. 99–26059 Filed 10–5–99; 8:45 am]

BILLING CODE 6714–01–P

FEDERAL RESERVE SYSTEM

Change in Bank Control Notices; Acquisitions of Shares of Banks or Bank Holding Companies

The notificants listed below have applied under the Change in Bank Control Act (12 U.S.C. 1817(j)) and § 225.41 of the Board's Regulation Y (12 CFR 225.41) to acquire a bank or bank holding company. The factors that are considered in acting on the notices are set forth in paragraph 7 of the Act (12 U.S.C. 1817(j)(7)).

The notices are available for immediate inspection at the Federal Reserve Bank indicated. The notices also will be available for inspection at the offices of the Board of Governors. Interested persons may express their views in writing to the Reserve Bank indicated for that notice or to the offices of the Board of Governors. Comments must be received not later than October 20, 1999.

A. Federal Reserve Bank of Atlanta (Cynthia Goodwin, Vice President) 104 Marietta Street, N.W., Atlanta, Georgia 30303-2713:

1. Gilbert J. Wellman, Sarasota, Florida; to acquire additional voting shares of Sarasota BanCorporation, Inc., Sarasota, Florida, and thereby indirectly acquire additional voting shares of Sarasota Bank, Sarasota, Florida.

B. Federal Reserve Bank of Dallas (W. Arthur Tribble, Vice President) 2200 North Pearl Street, Dallas, Texas 75201-2272:

1. Midgard, Ltd., Ennis, Texas; to acquire additional voting shares of Ennis Bancshares, Inc., Waco, Texas, and thereby indirectly acquire additional voting shares of Ennis State Bank, Ennis, Texas.

Board of Governors of the Federal Reserve System, September 30, 1999.

Robert deV. Frierson,

Associate Secretary of the Board.

[FR Doc. 99–25898 Filed 10–5–99; 8:45 am]

BILLING CODE 6210–01–F

FEDERAL RESERVE SYSTEM

Formations of, Acquisitions by, and Mergers of Bank Holding Companies

The companies listed in this notice have applied to the Board for approval, pursuant to the Bank Holding Company Act of 1956 (12 U.S.C. 1841 *et seq.*) (BHC Act), Regulation Y (12 CFR Part 225), and all other applicable statutes and regulations to become a bank holding company and/or to acquire the assets or the ownership of, control of, or the power to vote shares of a bank or bank holding company and all of the banks and nonbanking companies owned by the bank holding company, including the companies listed below.

The applications listed below, as well as other related filings required by the Board, are available for immediate inspection at the Federal Reserve Bank indicated. The application also will be available for inspection at the offices of the Board of Governors. Interested persons may express their views in writing on the standards enumerated in the BHC Act (12 U.S.C. 1842(c)). If the proposal also involves the acquisition of a nonbanking company, the review also includes whether the acquisition of the nonbanking company complies with the standards in section 4 of the BHC Act (12 U.S.C. 1843). Unless otherwise noted, nonbanking activities will be conducted throughout the United States.

Unless otherwise noted, comments regarding each of these applications must be received at the Reserve Bank indicated or the offices of the Board of Governors not later than October 29, 1999.

A. Federal Reserve Bank of Atlanta (Cynthia Goodwin, Vice President) 104 Marietta Street, N.W., Atlanta, Georgia 30303-2713:

1. First State Financial Corporation, Sarasota, Florida; to acquire 100 percent of the voting shares of First State Bank of Pinellas, St. Petersburg, Florida.

Board of Governors of the Federal Reserve System, September 30, 1999.

Robert deV. Frierson,

Associate Secretary of the Board.

[FR Doc. 99–25895 Filed 10–5–99; 8:45 am]

BILLING CODE 6210–01–F

FEDERAL RESERVE SYSTEM

Formations of, Acquisitions by, and Mergers of Bank Holding Companies; Correction

This notice corrects a notice (FR Doc. 99–24119) published on page 50286 of the issue for Thursday, September 16, 1999.

Under the Federal Reserve Bank of Chicago heading, the entry for Omega Financial Corporation, State College, Pennsylvania, is revised to read as follows:

A. Federal Reserve Bank of Philadelphia (Michael E. Collins, Senior Vice President) 100 North 6th Street, Philadelphia, Pennsylvania 19105–1521:

1. Omega Financial Corporation State College, Pennsylvania; to acquire 24.9 percent of the voting shares of Clearfield Bank & Trust Company, Clearfied, Pennsylvania.

Comments on this application must be received by October 12, 1999.

Board of Governors of the Federal Reserve System, September 30, 1999.

Robert deV. Frierson,

Associate Secretary of the Board.

[FR Doc. 99–25896 Filed 10–5–99; 8:45 am]

BILLING CODE 6210–01–F

Notice of Proposals to Engage in Permissible Nonbanking Activities or to Acquire Companies that are Engaged in Permissible Nonbanking Activities, Correction

This notice corrects a notice (FR Doc. 99-24542) published on page 51125 of the issue for Tuesday, September 21, 1999.

Under the Federal Reserve Bank of Boston heading, the entry for Boston private Financial Holdings, Inc., Boston, Massachusetts, is revised to read as follows:

A. Federal Reserve Bank of Boston (Richard Walker, Community Affairs Officer) 600 Atlantic Avenue, Boston, Massachusetts 02106-2204:

1. Boston Private Financial Holdings, Inc., Boston, Massachusetts; to acquire RINET Company, Inc., Boston, Massachusetts, and thereby indirectly acquire Cornerstone Fund Advisors, Inc., Boston, Massachusetts, and thereby engage in lending activities, pursuant to § 225.28(b)(1) of Regulation Y; in providing tax-planning and preparation services, business valuation and liquidation strategies, and asset allocation, estate planning, charitable planning, investment consulting, general financial planning, and other investment advisory services, pursuant to § 225.28(b)(6) of Regulation Y; in trust management services, pursuant to § 225.28(b)(5) of Regulation Y; in private placement services, pursuant to § 225.28(b)(7)(iii) of Regulation Y; in employee benefits consulting, pursuant to § 225.28(b)(9)(ii) of Regulation Y; in providing administrative services to closed-end investment funds, pursuant to Board Order, *see Dresdner Bank AG*, 82 Fed. Res. Bull. 676 (1996); and in serving as the general partner of private investment funds, pursuant to Board Order, *see Dresdner Bank AG* 84 Fed. Res. Bull. 361 (1998).

Comments on this application must be received by October 12, 1999.

Board of Governors of the Federal Reserve System, September 30, 1999.

Robert deV. Frierson,

Associate Secretary of the Board.

[FR Doc. 99–25894 Filed 10–5–99; 8:45 am]

BILLING CODE 6210–01–F

FEDERAL RESERVE SYSTEM

Notice of Proposals to Engage in Permissible Nonbanking Activities or to Acquire Companies that are Engaged in Permissible Nonbanking Activities

The companies listed in this notice have given notice under section 4 of the Bank Holding Company Act (12 U.S.C. 1843) (BHC Act) and Regulation Y (12 CFR Part 225), to engage *de novo*, or to acquire or control voting securities or assets of a company, including the companies listed below, that engages either directly or through a subsidiary or other company, in a nonbanking activity that is listed in § 225.28 of Regulation Y (12 CFR 225.28) or that the Board has determined by Order to be closely related to banking and permissible for bank holding companies. Unless otherwise noted, these activities will be conducted throughout the United States.

Each notice is available for inspection at the Federal Reserve Bank indicated. The notice also will be available for inspection at the offices of the Board of Governors. Interested persons may express their views in writing on the question whether the proposal complies with the standards of section 4 of the BHC Act.

Unless otherwise noted, comments regarding the applications must be received at the Reserve Bank indicated or the offices of the Board of Governors not later than October 20, 1999.

A. Federal Reserve Bank of Atlanta (Cynthia Goodwin, Vice President) 104 Marietta Street, N.W., Atlanta, Georgia 30303-2713:

1. Synovus Financial Corporation, Columbus, Georgia; to engage *de novo* in

a joint venture through its subsidiary, Prepaid Technologies, LLC, Birmingham, Alabama (in organization), in nonbanking activities including developing, introducing, selling, and marketing prepaid, stored value cards, offering prepaid, card based financial services and products, pursuant to § 225.28(b)(14) of Regulation Y.

Board of Governors of the Federal Reserve System, September 30, 1999.

Robert deV. Frierson,

Associate Secretary of the Board.

[FR Doc. 99–25897 Filed 10–5–99; 8:45 am]

BILLING CODE 6210–01–F

FEDERAL RESERVE SYSTEM

[Docket No. R–1047]

Privacy Act of 1974; Notice of Amendment of System of Records

AGENCY: Board of Governors of the Federal Reserve System.

ACTION: Amendment of system of records.

SUMMARY: In accordance with the Privacy Act, the Board of Governors of the Federal Reserve System (Board) is amending one system of records, entitled General Personnel Records (BGFRS–4). These amendments include new routine uses and reflect changes due to use of more computerized records and a reorganization of the Board's human resources function. We invite public comment on this publication.

DATES: Comment must be received on or before November 5, 1999.

ADDRESSES: Comments, which should refer to Docket No. R–1047, may be mailed to Ms. Jennifer J. Johnson, Secretary, Board of Governors of the Federal Reserve System, 20th Street and Constitution Avenue, NW, Washington, DC 20551. Comments addressed to Ms. Johnson also may be delivered to the Board's mail room between 8:45 a.m. and 5:15 p.m. on weekdays, and to the security control room outside of those hours. The mail room and the security control room are accessible from the courtyard entrance on 20th Street between Constitution Avenue and C Street, NW. Comments will be available for inspection and copying by members of the public in the Freedom of Information Office, Room MP–500, between 9 a.m. and 5 p.m. weekdays, except as provided in § 261.13(i) of the Board's Rules Regarding Availability of Information.

FOR FURTHER INFORMATION CONTACT: Elaine M. Boutilier, Senior Counsel, Legal Division (202/452–2418), or Chris Fields, Manager, Human Resources Function, Management Division (202/452–3654). For the hearing impaired *only*, contact Diane Jenkins, Telecommunications Device for the Deaf (TDD)(202/452–3544), Board of Governors of the Federal Reserve System, 20th and Constitution, NW, Washington, DC 20551.

SUPPLEMENTARY INFORMATION: Unlike most Federal government agencies whose personnel files are maintained by the Office of Personnel Management (OPM), the Board maintains its own personnel files because the Board has independent statutory authority to hire staff and set the salary and benefit terms for its staff. Accordingly, the personnel files of Board employees are not contained in the system of records identified as OPM/GOVT–1. Nevertheless, the Board's personnel files are used in much the same manner as personnel files of other federal employees. Accordingly, after reviewing the routine uses for the existing system of records, the Board has determined to adopt many of the routine uses that are included in OPM/GOVT–1.

In accordance with 5 U.S.C. 552a(r), a report of these amended systems of records is being filed with the Chair of the House Committee on Government Reform and Oversight, the Chair of the Senate Committee on Governmental Affairs, and the Office of Management and Budget. These amendments will become effective on November 9, 1999, without further notice, unless the Board publishes a notice to the contrary in the **Federal Register**.

Accordingly, the system of records entitled FEB–General Personnel Records (BGFRS–4) is amended as set forth below.

BGFRS–4.

SYSTEM NAME:

FRB—General Personnel Records.

SECURITY CLASSIFICATION:

None.

SYSTEM LOCATION:

Board of Governors of the Federal Reserve System, 20th and Constitution, NW, Washington, DC 20551.

CATEGORIES OF INDIVIDUALS COVERED BY THE SYSTEM:

Current and former employees of the Board, and the surviving spouses and children of former Board employees.

CATEGORIES OF RECORDS IN THE SYSTEM:

This system of records consists of information relating to personnel actions of the Board and its determinations made about an individual during the course of his or her employment by the Board. These records may contain information about employees and former employees relating to employment, placement, personnel actions; academic assistance, and training and development activities; background investigations; and salary actions. Performance Management Program (PMP) ratings for the most recent two years are included, but the actual PMP form is not. It also includes minority group and medical disability designators; records relating to benefits and designation of beneficiary; emergency contact information; address and name changes; documentation supporting personnel actions or decisions made about an individual; information concerning awards; and other information relating to the status of the individual while employed by the Board, including records of jury duty by the employee and any doctor's certificate that may have been filed at the request of the employee regarding the employee's health. The system of records also contains information regarding surviving beneficiaries of deceased Board employees to the extent necessary to provide benefits to those individuals.

AUTHORITY FOR MAINTENANCE OF THE SYSTEM:

Sections 10 and 11 of the Federal Reserve Act (12 U.S.C. 244 and 248(l)).

PURPOSE(S):

These records are collected and maintained to assist the Board in its personnel actions and decisions, and in the administration of its benefits programs.

ROUTINE USES OF RECORDS MAINTAINED IN THE SYSTEM, INCLUDING CATEGORIES OF USERS AND THE PURPOSES OF SUCH USES:

These records and information in these records may be used:

a. To disclose information to Government training facilities (Federal, State, and local) and to non-Government training facilities (private vendors of training courses or programs, private schools, etc.) for training purposes.

b. To disclose information to educational institutions on appointment of a recent graduate to a position at the Board, and to provide college and university officials with information about their students who are working in internships or other similar programs necessary to a student's obtaining credit for the experience gained.

c. To disclose information to the Department of Labor, Department of Veterans Affairs, Social Security Administration, Department of Defense, a Federal Reserve Bank, or any Federal

agencies that have special civilian employee retirement programs; or to a national, State, county, municipal, or other publicly recognized charitable or income security, administration agency (*e.g.*, State unemployment compensation agencies), when necessary to adjudicate a claim under the retirement, insurance, unemployment, or health benefits programs of the Board, a Federal Reserve Bank, or any agency cited above, or to an agency to conduct an analytical study or audit of benefits being paid under such programs.

d. To disclose to the Office of Federal Employees Group Life Insurance, information necessary to verify election, declination, or waiver of regular and/or optional life insurance coverage, eligibility for payment of a claim for life insurance, or a Thrift Savings Program (TSP) election change and designation of beneficiary.

e. To disclose to the manager of the Federal Reserve Thrift Plan, or any other TSP, information necessary to complete enrollment, determine appropriate levels of withholding and/or contributions, determine eligibility for disbursements, verify designation of beneficiary, or to carry out the coordination or audit of the Plan or savings program.

f. To disclose, to health insurance carriers contracting with the Board and/or the Federal Government to provide a health benefits plan (*e.g.*, Federal Employees Health Benefits Program), information necessary to identify enrollment in a plan, to verify eligibility for payment of a claim for health benefits, or to carry out the coordination or audit of benefit provisions of such contracts.

g. To disclose pertinent information to the appropriate Federal, State, or local agency responsible for investigating, prosecuting, enforcing, or implementing a statute, rule, regulation, or order, when the Board becomes aware of an indication of a violation or potential violation of civil or criminal law or regulation.

h. To disclose information to any source from which additional information is requested (to the extent necessary to identify the individual, inform the source of the purpose(s) of the request, and to identify the type of information requested), when necessary to obtain information relevant to a Board decision to hire or retain an employee, issue a security clearance, conduct a security or suitability investigation of an individual, classify jobs, let a contract, or issue a license, grant, or other benefits.

i. To disclose to a Federal agency in the executive, legislative or judicial branch of government, or to a Federal Reserve Bank, in response to its request, or at the initiation of the Board, information in connection with the hiring of an employee, the issuance of a security clearance, the conducting of a security or suitability investigation of an individual, the classifying of jobs, the letting of a contract, the issuance of a license, grant, or other benefits by the requesting agency, or the lawful statutory, administrative, or investigative purpose of the agency to the extent that the information is relevant and necessary to the requesting agency's decision.

j. To provide information to a congressional office from the record of an individual in response to an inquiry from the congressional office made at the request of the individual.

k. To disclose information to another Federal agency, a court, or a party in litigation before a court or in an administrative proceeding being conducted by a Federal agency, when the Board is a party to the judicial or administrative proceeding.

l. To disclose information to the Department of Justice or in a proceeding before a court, adjudicative body, or other administrative body before which the Board is authorized to appear, when:

(1) The Board or any employee of the Board in his or her official capacity; or

(2) Any employee of the Board in his or her individual capacity where the Department of Justice or the Board has agreed to represent the employee; or

(3) The United States (when the Board determines that the litigation is likely to affect the Board) is a party to litigation or has an interest in such litigation, and the use of such records by the Department of Justice or the Board is deemed by the Board to be relevant and necessary to the litigation provided, however, that in each case it has been determined that the disclosure is compatible with the purpose for which the records were collected.

m. By the National Archives and Records Administration in connection with records management inspections and its role as Archivist.

n. When an individual to whom a record pertains is mentally incompetent or under other legal disability, information in the individual's record may be disclosed to any person who is responsible for the care of the individual, to the extent necessary to assure payment of benefits to which the individual is entitled.

o. To disclose to the Board-appointed representative of an employee all notices, determination, decisions, or other written communications issued to the employee, in connection with an examination ordered by the Board under—

(1) Fitness-for-duty examination procedures; or

(2) Agency-filed disability retirement procedures.

p. To disclose, in response to a request for discovery or for appearance of a witness, information that is relevant to the subject matter involved in a pending judicial or administrative proceeding.

q. To disclose to a requesting agency, organization, or individual the home address and other relevant information on those individuals who it reasonably believed might have contracted an illness or might have been exposed to or suffered from a health hazard while employed in the Federal workforce.

r. To disclose information to the Equal Employment Opportunity Commission when requested in connection with investigations or other functions vested in the Commission.

s. To disclose to prospective non-Federal employers the following information about a specifically identified current or former Board employee: (1) Tenure of employment; (2) civil service status; (3) length of service at the Board and in the Government; and (4) when separated, the date and nature of action as shown on the Job Action.

t. To disclose information to contractors, grantees, or volunteers performing or working on a contract, service, grant, cooperative agreement, or job for the Board.

u. To disclose information to a Federal, State or local governmental entity or agency (or its agent) when necessary to locate individuals who are owed money or property either by a Federal, State, or local agency, or by a financial or similar institution.

v. To disclose to a spouse or dependent child (or court-appointed guardian thereof) of a Board employee enrolled in the Federal Employees Health Benefits Program, upon request, whether the employee has changed from a self-and-family to a self-only health benefits enrollment.

w. To verify for an entity preparing to make a loan to an employee the individual's employment status and salary.

x. To disclose information to officials of labor organizations recognized under applicable law when relevant and necessary to their duties of exclusive representation concerning personnel policies, practices, and matters affecting working conditions.

y. To disclose information to the Merit Systems Protection Board or the Office of Special Counsel in connection with appeals, special studies of the civil service and other merit systems, review of Office rules and regulations, investigation of alleged practices, and such other functions promulgated in 5 U.S.C. chapter 12, or as may be authorized by law.

DISCLOSURE TO CONSUMER REPORTING AGENCIES:

Not applicable.

POLICIES AND PRACTICES FOR STORING, RETRIEVING, ACCESSING, RETAINING, AND DISPOSING OF RECORDS IN THE SYSTEM:

STORAGE:

Records are maintained in file folders, microfiche, and in computer processable storage media.

RETRIEVABILITY:

Records are indexed by name, Social Security number, or identification number. Electronically maintained records may be sorted and retrieved by other variables, such as date of birth, division in which an employee works, or date of hire.

SAFEGUARDS:

Paper or microfiche records are located in locked metal file cabinets or in metal file cabinets in secured rooms with access limited to those whose official duties require it. Access to computerized records is limited, through use of access codes, to those whose official duties require it. In addition, access to computerized records can be tracked through an automatically-generated audit trail.

RETENTION AND DISPOSAL:

The general employment records are retained indefinitely. An individual's benefits records are maintained until the death of the last surviving beneficiary.

SYSTEM MANAGER(S) AND ADDRESS:

Associate Director, Human Resources Function, Management Division, Board of Governors of the Federal Reserve System, 20th & Constitution, NW, Washington, DC 20551.

NOTIFICATION PROCEDURE:

Inquiries should be sent to the Secretary of the Board, Board of Governors of the Federal Reserve System, 20th and Constitution Avenue, NW, Washington, DC 20551. The request should contain the individual's name, date of birth, Social Security number, identification number (if known), approximate date of record, and type of position.

RECORD ACCESS PROCEDURES:

Current Board employees who wish to gain access to or contest their records should contact the system manager, address above. Former Board employees should direct such a request in writing to the Secretary of the Board, Board of Governors of the Federal Reserve System, 20th and Constitution Avenue, NW, Washington, DC 20551. The request should contain the individual's name, date of birth, Social Security number, identification number (if known), approximate date of record, and type of position.

CONTESTING RECORD PROCEDURES:

Same as ''Notification procedure'' above.

RECORD SOURCE CATEGORIES:

Information in this system of records comes from the individual to whom it applies or is derived from the information the individual supplied, except information provided by Board officials. Information is also obtained from the following sources: OPM Personnel Management Records System; personnel records of other Government agencies; personnel records of Federal Reserve Banks; and official transcripts from schools when authorized by the employee.

SYSTEMS EXEMPTED FROM CERTAIN PROVISIONS OF THE ACT:

Pursuant to subsections (k)(2) and (k)(5) of the Privacy Act and the Board's regulation relating thereto (12 CFR part 261a), certain portions of this system of records may be exempted from certain provisions of the Act where: (1) Such portions represent investigatory material compiled for law enforcement purposes, or (2) such portions represent investigatory material compiled solely for the purpose of determining suitability, eligibility, or qualifications for Board employment to extent that disclosure of such portions would reveal the identity of a source who furnished information under a promise of confidentiality.

By order of the Board of Governors of the Federal Reserve System, September 30, 1999.

Jennifer J. Johnson,

Secretary of the Board.

[FR Doc. 99–25923 Filed 10–5–99; 8:45 am]

BILLING CODE 6210–01–P

FEDERAL TRADE COMMISSION

Agency Information Collection Activities; Proposed Collection; Comment Request; Extension

AGENCY: Federal Trade Commission.

ACTION: Notice.

SUMMARY: The proposed information collection requirements described below will be submitted to the Office of Management and Budget (OMB) for review, as required by the Paperwork Reduction Act. The Federal Trade Commission (FTC) is soliciting public comments on proposed extensions of Paperwork Reduction Act (PRA) clearance for information collection requirements associated with six current rules enforced by the Commission. These clearances expire on December 31, 1999. The FTC has requested that OMB extend the paperwork clearances through December 31, 2002.

DATES: Comments must be filed by December 6, 1999.

ADDRESSES: Send written comments to Gary M. Greenfield, Attorney, Office of the General Counsel, Federal Trade Commission, Washington, DC 20580, 202–326–2753. All comments should be identified as responding to this notice.

FOR FURTHER INFORMATION CONTACT: Requests for additional information or copies of the proposed information requirements should be addressed to Gary M. Greenfield at the address listed above.

SUPPLEMENTARY INFORMATION: Under the Paperwork Reduction Act of 1995 (PRA) (44 U.S.C. 3501–3520), Federal agencies must obtain approval from OMB for each collection of information they conduct or sponsor. ''Collection of information'' means agency requests or requirements that members of the public submit reports, keep records, or provide information to a third party. 44 U.S.C. 3502(3), 5 CFR 1320.3(c). As required by section 3506(c)(2)(A) of the PRA, the FTC is providing this opportunity for public comment before requesting that OMB extend the existing paperwork clearance for the regulations noted herein.

The FTC invites comments on: (1) Whether the proposed collection of information is necessary for the proper performance of the functions of the agency, including whether the information will have practical utility; (2) the accuracy of the agency's estimate of the burden of the proposed collection of information, including the validity of the methodology and assumptions used; (3) ways to enhance the quality, utility, and clarity of the information to be collected; and (4) ways to minimize the burden of the collection of information on those who are to respond, including through the use of appropriate automated, electronic, mechanical, or other technological collection techniques or other forms of information

technology, e.g., permitting electronic submission of responses.

The relevant information collection requirements are as follows:

1. The Fuel Rating Rule, 16 CFR part 306 (Control Number: 3084–0068)

The Fuel Rating Rule establishes standard procedures for determining, certifying, and disclosing the octane rating of automotive gasoline and the automotive fuel rating of alternative liquid automotive fuel, as required by the Petroleum Marketing Practices Act. 15 U.S.C. 2822(a)–(c). The Rule also requires refiners, producers, importers, distributors, and retailers to retain records showing how the ratings were determined, including delivery tickets or letters of certification.

Estimated annual hours burden: 46,500 total burden hours (20,500 recordkeeping hours + 26,000 disclosure hours).

Recordkeeping: Based on industry sources, staff estimates that 205,000 fuel industry members incur an average annual burden of approximately one-tenth of an hour to ensure retention of relevant business records for the period required by the rule, resulting in a total of 20,500 hours.

Disclosure: Staff estimates that affected industry members incur an average burden of approximately one hour to produce, distribute, and post octane rating labels. Because the labels are durable, only about one of every eight industry members (i.e., approximately 26,000 of 205,000 industry members) incur this burden each year, resulting in a total annual burden of 26,000 hours.

Estimated annual cost burden: $749,000, rounded ($697,500 in labor costs and $51,300 in non-labor costs).

Labor costs: Staff estimates that the work associated with the Rule's recordkeeping and disclosure requirement is performed by skilled clerical employees at an average rate of $15.00 per hour. Thus, the annual labor cost to respondents of complying with the recordkeeping and disclosure requirements of the Fuel Rating Rule is estimated to be $697,500 ((20,500 hours + 26,000 hours) × $15.00 per hour).

Capital or other non-labor costs: Staff believes that there are no current start-up costs associated with the Rule. Because the Rule has been effective since 1979 for gasoline, and since 1993 for liquid alternative automotive fuels, industry members should already have in place the capital equipment and other means necessary to comply with the Rule. Industry members do, however, incur the cost of procuring fuel dispenser labels to comply with the Rule. Based on estimates of 1,080,000 fuel dispensers (180,000 retailers × an average of six dispensers per retailer) and a cost of thirty-eight cents each (per industry sources) for labels that last for eight years, the total annual labeling cost is estimated to be $51,300.

2. Regulations Under the Fur Products Labeling Act, 15 U.S.C. 69 et seq. ("Fur Act") (Control Number: 3084–0099)

The Fur Act prohibits misbranding and false advertising of fur products. The Fur Products Regulations, 16 CFR 301 ("Fur Regulations"), establish disclosure requirements that assist consumers in making informed purchasing decisions, and recordkeeping requirements that assist the Commission in enforcing these regulations. The Fur Regulations also provide a procedure for exemption from certain disclosure provisions under the Act.

Estimated annual hours burden: 150,000 hours, rounded (70,200 hours for recordkeeping + 79,450 hours for disclosure).

Recordkeeping: The Fur Regulations require that retailers, manufacturers and processors, and importers keep records in addition to those they may keep in the ordinary course of business Staff estimates that 1,500 retailers incur an average recordkeeping burden of about 13 hours per year (19,500 hours total); 225 manufacturers and fur processors incur an average recordkeeping burden of about 52 hours per year (11,700 total); and 1,500 importers of furs and fur products incur an average recordkeeping burden of 26 hours per year (39,000 hours total).[1] The combined recordkeeping burden for the industry is approximately 70,200 hours annually.

Disclosure: Staff estimates that 1,710 respondents (210 manufacturers + 1,500 retail sellers of fur garments) each require an average of 20 hours per year to determine label content (34,200 hours total), and an average of five hours per year to draft and order labels (8,550 hours total). Staff estimates that manually attaching a label to an estimated 785,000 fur garments requires approximately two minutes per garment for an approximate total of 26,200 hours annually. Thus, the total burden for labeling garments is 68,950 hours per year.

Staff estimates that the incremental burden associated with the Fur Regulations' invoice disclosure requirement, beyond the time that would be devoted to preparing invoices in the absence of the Fur Regulations, is approximately 30 seconds per invoice.[2] The invoice disclosure requirement applies to fur garments, which are generally sold individually, and fur pelts, which are generally sold in groups of at least 50, on average. Assuming invoices are prepared for sales of 785,000 garments, 150,000 groups of imported pelts (7.5 million pelts ÷ 50) and 150,000 groups of domestic pelts, the invoice disclosure requirement entails a total burden of approximately 9,000 hours, rounded.

Staff estimates that the Fur Regulations' advertising disclosure requirements impose an average burden of one hour per year for each of the approximately 1,500 domestic fur retailers, or a total of 1,500 hours.

Thus, staff estimates the total disclosure burden to be approximately 79,450 hours (68,950 hours for labeling + 9,000 hours for invoices + 1,500 hours for advertising).

Estimated annual cost burden: $1,611,000, rounded (solely relating to labor costs).

Staff estimates the annual labor cost burden based on the following computations using labor cost rates based on information from the Department of Labor and the American Apparel Manufacturers Association:

Task	Hourly rate	Burden hours	Labor cost
Determine label content	$15.00	34,200	$513,000
Draft and order labels	9.00	8,550	76,950
Attach labels	8.00	26,200	209,600
Invoice disclosures	10.00	9,000	90,000
Prepare advertising disclosures	15.00	1,500	22,500

[1] For many of these importers, fur products probably would constitute only a small portion of their import business.

[2] The invoicing burden for PRA purposes excludes the time that, absent the Fur Act regulations, respondents would still spend for invoicing in the ordinary course of business. *See* 5 CFR § 1320.3(b)(2).

Task	Hourly rate	Burden hours	Labor cost
Recordkeeping	10.00	70,200	702,000
Total			1,610,850

Staff believes that there are no current start-up costs or other capital costs associated with the Fur Regulations. Because the labeling of fur products has been an integral part of the manufacturing process for decades, manufacturers have in place the capital equipment necessary to comply with the Fur Regulations. Industry sources indicate that much of the information required by the Fur Act and its implementing rules would be included on the product label even absent the Fur Regulations. Similarly, invoicing, recordkeeping, and advertising disclosures are tasks performed in the ordinary course of business so that covered firms would incur no additional capital or other non-labor costs as a result of the Act.

3. Regulations Under the Wool Products Labeling Act, 5 U.S.C. 68 et seq. (''Wool Act'') (Control Number: 3084–0100)

The Wool Act prohibits misbranding of wool products. The Wool Act Regulations, 16 CFR 300 (''Wool Regulations''), establish disclosure requirements that assist consumers in making informed purchasing decisions and recordkeeping requirements that assist the Commission in enforcing the Regulations.

Estimated annual hours burden: 1,236,000 hours (375,000 recordkeeping hours + 861,000 disclosure hours).

Recordkeeping: Based on Bureau of Census data and other information, staff estimates that approximately 15,000 wool firms are subject to the Wool Regulations' recordkeeping requirements. Based on an average burden of 25 hours per firm, the total recordkeeping burden is 375,000 hours.

Disclosure: Approximately 20,000 wool firms, producing or importing about one billion wool products annually, are subject to the Wool Regulations' disclosure requirements. Staff estimates the burden of determining label content to be 20 hours per year per respondent, or a total of 400,000 hours, and the burden of drafting and ordering labels to be 5 hours per respondent per year, or a total of 100,000 hours. Staff estimates that the process of attaching labels is now fully automated and integrated into other production steps for about 35 percent of all affected garments. For the remaining 650,000,000 items (65 percent of one billion), the process is semi-automated and requires an average of approximately two seconds per item, for a total of 361,111 hours per year. Thus, the total estimated annual burden for all respondents is 861,000 hours, rounded.

Estimated annual cost burden: $13,539,000, rounded (solely relating to labor costs).

Staff estimates the annual labor cost burden based on the following computations using labor cost rates based on information from the Department of Labor and the American Apparel Manufacturers Association:

Task	Hourly rate	Burden hours	Labor cost
Determine label content	$15.00	400,000	$6,000,000
Draft and order labels	9.00	100,000	900,000
Attach labels	8.00	361,111	2,888,888
Recordkeeping	10.00	375,000	3,750,000
Total			13,538,888

Staff believes that there are no current start-up costs or other capital costs associated with the Wool Regulations. Because the labeling of wool products has been an integral part of the manufacturing process for decades, manufacturers have in place the capital equipment necessary to comply with the Wool Regulations. Based on knowledge of the industry, staff believes that much of the information required by the Wool Act and its implementing rules would be included on the product label even absent the Wool Regulations. Similarly, recordkeeping and advertising disclosures are tasks performed in the ordinary course of business so that covered firms would incur no additional capital or other non-labor costs as a result of the Wool Regulations.

4. Regulations Under the Textile Fiber Products Identification Act, 15 U.S.C. 70 et seq. (''Textile Act'' (Control Number: 3084–0101)

The Textile Act prohibits misbranding and false advertising of textile fiber products. The Textile Act Regulations, 16 CFR part 303 (''Textile Regulations''), establish disclosure requirements that assist consumers in making informed purchasing decisions, and recordkeeping requirements that assist the Commission in enforcing the Regulations. The Regulations also contain a petition procedure for requesting the establishment of generic names for textile fibers.

Estimated annual hours burden: approximately 6,433,000 hours (725,000 recordkeeping hours + 5,708,000 disclosure hours).

Recordkeeping: Based on Bureau of Census data and other information, staff estimates that approximately 29,000 textile firms are subject to the Textile Regulations' recordkeeping requirements. Based on an average burden of 25 hours per firm, the total recordkeeping burden is 725,000 hours.

Disclosure: Approximately 39,000 textile firms, producing or importing about 13.1 billion textile fiber products annually, are subject to the Textile Regulations' disclosure requirements. Staff estimates the burden of determining label content to be 20 hours per year per respondent, or a total of 780,000 hours and the burden of drafting and ordering labels to be 5 hours per respondent per year, or a total of 195,000 hours. Staff estimates that the process of attaching labels is now fully automated and integrated into other production steps for about 35 percent of all affected garments. For the remaining 8.52 billion items (65 percent of 13.1

billion), the process is semi-automated and requires an average of approximately two seconds per item, for a total of 4,732,860 hours per year. Thus, the total estimated annual burden for all respondents is 5,708,000 hours, rounded.

Estimated annual cost burden: $58,568,000, rounded (solely relating to labor costs).

Staff estimates the annual labor cost burden based on the following computations using labor cost rates based on information from the Department of Labor and the American Apparel Manufacturers Association:

Task	Hourly rate	Burden hours	Labor cost
Determine label content	$15.00	780,000	$11,700,000
Draft and order labels	9.00	195,000	1,755,000
Attach labels	8.00	4,732,860	37,862,880
Recordkeeping	10.00	725,000	7,250,000
Total			58,567,880

Staff believes that there are no current start-up costs or other capital costs associated with the Textile Regulations. Because the labeling of textile products has been an integral part of the manufacturing process for decades, manufacturers have in place the capital equipment necessary to comply with the Textile Regulations. Industry sources indicate that much of the information required by the Textile Act and its implementing rules would be included on the product label even absent the Textile Regulations. Similarly, invoicing, recordkeeping, and advertising disclosures are tasks performed in the ordinary course of business so that covered firms would incur no additional capital or other non-labor costs as a result of the Textile Regulations.

5. The Care Labeling Rule, 16 CFR Part 423 (Control Number: 3084–0103)

The Care Labeling Rule, 16 CFR part 423, requires manufacturers and importers to attach a permanent care label to all covered textile clothing in order to assist consumers in making purchase decisions and in determining what method to use to clean their apparel. Also, manufacturers and importers of piece goods used to make textile clothing must provide the same care information on the end of each bolt or roll of fabric.

Estimated annual hours burden: 5,449,000 hours, rounded (solely relating to disclosure).[3]

Based on Bureau of Census data and other information, staff estimates that approximately 24,000 manufacturers of textile apparel, producing about 12.1 billion textile garments annually, are subject to the Care Labeling Rule disclosure requirements. The burden of developing proper care instructions may vary greatly among firms, primarily based on the number of different lines of textile garments introduced per year that require new or revised care instructions. Staff estimates the burden of determining label content to be 43 hours per year per respondent, or a total of 1,032,000 hours and the burden of drafting and ordering labels to be 2 hours per respondent per year, or a total of 48,000 hours. Staff estimates that the process of attaching labels is now fully automated and integrated into other production steps for about 35 percent of all affected garments. For the remaining 7,865 billion items (65 percent of 12.1 billion), the process is semi-automated and requires an average of approximately two seconds per item, for a total of 4,369,444 hours per year. Thus, the total estimated annual burden for all respondents is 5,449,000 hours, rounded.

Estimated annual cost burden: $51,000,000 (solely relating to labor costs). Staff estimates the annual labor cost burden based on the following computations using labor cost rates based on information from the Department of Labor and the American Apparel Manufacturers Association:

Task	Hourly rate	Burden hours	Labor cost
Determine label content	$15.00	1,032,000	$15,480,000
Draft and order labels	9.00	48,000	432,000
Attach labels	8.00	4,369,444	34,955,552
Total			50,867,552

Staff believes that there are no current start-up costs or other capital costs associated with the Care Labeling Rule. Because the labeling of textile products has been an integral part of the manufacturing process for decades, manufacturers have in place the capital equipment necessary to comply with the Care Labeling Rule. Based on knowledge of the industry, staff believes that much of the information required by the Care Labeling Rule would be included on the product label even absent those requirements. Similarly, invoicing recordkeeping, and advertising disclosures are tasks performed in the ordinary course of business so that covered firms would incur no additional capital or other non-labor costs as a result of the Care Labeling Rule.

6. Regulations Under The Fair Packaging and Labeling Act, 15 U.S.C. 1450 (“FPLA”) (Control Number: 3084–0110)

The FPLA was enacted to eliminate consumer deception concerning product size representations and package content information. The Regulations that implement the FPLA, 16 CFR part 500, establish requirements for the manner and form of labeling applicable

[3] The Care Labeling Rule imposes no specific recorkeeping requirements. Although the Rule requires manufacturers and importers to have reliable evidence that their products were successfully tested, companies may provide as support current technical literature or rely on past experience.

to manufacturers, packagers, and distributors of consumer commodities. Section 4 of the FPLA specifically requires packages or labels to be marked with: (1) A statement of identity; (2) a net quantity of contents disclosure; and (3) the name and place of business of a company that is responsible for the product.

Estimated annul hours burden: 12,000,000 total burden hours (solely relating to disclosure [4]).

Staff estimates that approximately 1,200,000 manufacturers, packagers, distributors, and retailers of consumer commodities make disclosures at an average burden of ten hours per company, for a total disclosure burden of 12,000,000 hours.

Estimated annual cost burden: $168,000,000 (solely relating to labor costs).

The estimated annual labor cost burden associated with the FLPA disclosure requirements consists of the cost of one hour of managerial or professional time per covered entity (at an average cost of $50 per hour) and nine hours of clerical time per covered entity (at an average cost of $10), for a total of $168,000,000 ($140 per covered entity times 1.2 million entities).

Total capital and start-up costs are de minimis. The packaging and labeling activities that require capital and start-up costs are independent of the FPLA, and would be performed by covered entities in the ordinary course of business regardless of the statute. Because FPLA requires that the information be placed on packages and labels, which firms provide in the ordinary course of business, there appear to be no additional operation, maintenance, or purchase of service costs.

Debra A. Valentine,

General Counsel.

[FR Doc. 99–26034 Filed 10–5–99; 8:45 am]

BILLING CODE 6750–01–M

[4] Neither the FPLA nor the implementing regulations impose any specific recordkeeping requirements.

FEDERAL TRADE COMMISSION

[File No. 972–3209]

Castrol North America, Inc.; Analysis To Aid Public Comment

AGENCY: Federal Trade Commission.

ACTION: Proposed consent agreement.

SUMMARY: The consent agreement in this matter settles alleged violations of federal law prohibiting unfair or deceptive acts or practices or unfair methods of competition. The attached Analysis to Aid Public Comments describes both the allegations in the draft complaint that accompanies the consent agreement and the terms of the consent order—embodied in the consent agreement—that would settle these allegations.

DATES: Comments must be received on or before December 6, 1999.

ADDRESSES: Comments should be directed to: FTC/Office of the Secretary, Room 159, 600 Pennsylvania Ave., NW, Washington, DC 20580.

FOR FURTHER INFORMATION CONTACT: C. Lee Peeler or Michael Derschowitz, FTC/S–4002, 600 Pennsylvania Ave., NW, Washington, DC 20580, (202) 326–3090 or 326–3158.

SUPPLEMENTARY INFORMATION: Pursuant to section 6(f) of the Federal Trade Commission Act, 38 Stat. 721, 15 U.S.C. 46 and § 2.34 of the Commission's rules of practice (16 CFR 2.34), notice is hereby given that the above-captioned consent agreement containing a consent order to cease and desist, having been filed with and accepted, subject to final approval, by the Commission, has been placed on the public record for a period of sixty (60) days. The following Analysis to Aid Public Comment describes the terms of the consent agreement, and the allegations in the complaint. An electronic copy of the full text of the consent agreement package can be obtained from the FTC Home Page (for September 15, 1999), on the World Wide Web, at ''http://www.ftc.gov/os/actions97.htm.'' A paper copy can be obtained from the FTC Public Reference Room, Room H–130, 600 Pennsylvania Avenue, NW, Washington, DC 20580, either in person or by calling (202) 326–3627.

Public comment is invited. Comments should be directed to: FTC/Office of the Secretary, Room 159, 600 Pennsylvania Ave., NW, Washington, DC 20580. Two paper copies of each comment should be filed, and should be accompanied, if possible, by a 3½ inch diskette containing an electronic copy of the comments. Such comments or views will be considered by the Commission and will be available for inspection and copying at its principal office in accordance with § 4.9(b)(6)(ii) of the Commission's rules of practice (16 CFR 4.9(b)(6)(ii)).

Analysis of Proposed Consent Order To Aid Public Comment

The Federal Trade Commission has accepted, subject to final approval, an agreement containing a consent order from respondent Castrol North America Inc. (''Castrol'').

The proposed consent order has been placed on the public record for sixty (60) days for reception of comments by interested persons. Comments received during this period will become part of the public record. After sixty (60) days, the Commission will again review the agreement and the comments received and will decide whether it should withdraw from the agreement or make final the agreement's proposed order.

Castrol manufactures and sells automotive products, including fuel additive products added by consumers to a car's gas tank. This matter concerns allegedly deceptive advertising claims regarding the performance attributes of a fuel additive product, Castrol's Syntec Power System (''Castrol Syntec''). The Commission's proposed complaint alleges that Castrol made unsubstantiated claims that Castrol Syntec significantly improves engine power and acceleration for motor vehicles generally. The complaint also challenges as unsubstantiated the claim that Castrol Syntec is superior to other fuel system treatments in improving engine power and acceleration. Finally, the complaint challenges as false or misleading the claims the laboratory tests prove that Castrol Syntec (a) significantly improves engine power and acceleration, and (b) is superior to other fuel system treatments in improving engine power and acceleration.

The proposed consent order contains provisions designed to prevent respondent from engaging in similar acts and practices in the future.

Part I of the proposed order prohibits respondent claiming that Castrol Syntec or any other fuel oil additive improves power or acceleration, or is superior to other products in this regard, unless the claim is substantiated by competent and reliable scientific evidence. Part II of the proposed order requires Castrol to have substantiation for any representation concerning the performance, benefits, efficacy, attributes of use of Castrol Syntec or any other fuel additive product.

Part III of the proposed order prohibits respondent from misrepresenting the existence, contents, validity, results, conclusions, or interpretations of any test, study or research done on any fuel additive product.

Part IV of the proposed order requires respondent to maintain copies of all materials relied upon in making any representation covered by the order.

Part V of the proposed order requires respondent to distribute copies of the order to its operating divisions and to

various officers, agents and employees of respondent.

Part VI of the proposed order requires respondent to notify the Commission of any changes in corporate structure that might affect compliance with the order.

Part VII of the proposed order requires respondent to file with the Commission one or more reports detailing compliance with the order.

Part VIII of the proposed order is a ''sunset'' provision, dictating that the order will terminate twenty years from the date it is issued or twenty years after a complaint is filed in federal court, by either the United States or the FTC, alleging any violation of the order.

The purpose of this analysis is to facilitate public comment on the proposed order. It is not intended to constitute an official interpretation of the agreement and proposed order or to modify in any way their terms.

By direction of the Commission.

Donald S. Clark,

Secretary.

[FR Doc. 99–26033 Filed 10–05–99; 8:45 am]

BILLING CODE 6750–01–M

DEPARTMENT OF HEALTH AND HUMAN SERVICES

Agency for Health Care Policy and Research

Notice of Meetings; Correction

In notice document (FR Doc. 99–24722) appearing on page 51545, in the issue of Thursday, September 23, 1999, make the following correction:

On page 51545, column 3, the Health Research Dissemination and Implementation (HRDI) Subcommittee will meet as a Special Emphasis Panel instead of a Study Section.

Dated: September 29, 1999.

John M. Eisenberg,

Administrator.

[FR Doc. 99–25892 Filed 10–5–99; 8:45 am]

BILLING CODE 4160–90–M

DEPARTMENT OF HEALTH AND HUMAN SERVICES

Administration on Aging

Announcement of Fiscal Year 1999 Sole Source Award

AGENCY: Administration on Aging, HHS.

ACTION: Announcement of sole source awards made by the Administration on Aging in fiscal year (FY) 1999 under the authority of Title IV of the Older Americans Act (42 U.S.C. 3001 *et seq.*).

SUMMARY: The Administration on Aging announces that it has made nine (9) sole source awards in FY 1999 as follows: The National Council on the Aging (DC), $210,018, July 1, 1999 to June 30, 2000; Asociacion National Pro Personas Mayores (CA), $148,500, August 1, 1999 to July 31, 2000; National Caucus and Center on Black Aged (DC), $150,000, August 1, 1999 to July 31, 2000; National Hispanic Council on Aging (DC), $150,000, August 1, 1999 to July 31, 2000; Sinai Family Health Center (IL), $197,400, September 1, 1999 to August 31, 2000; Pennsylvania Department of Aging (PA), $742,750, September 1, 1999 to August 31, 2000; Setting Priorities for Retirement Years (DC), $197,399, September 1, 1999 to August 31, 2000; Deaconess Billings Clinic Foundation (MT), $742,250, September 1, 1999 to August 31, 2000; and North Central Community Services (WI), $195,000, September 30, 1999 to September 29, 2000.

All awards were made consistent with the terms of Senate Report 105–300 and House Report 105–825 which accompany the Omnibus Consolidated Appropriations Act of 1999 (Pub.L. 105–277).

FOR FURTHER INFORMATION CONTACT: Edwin L. Walker, 202–619–1828.

Dated: September 30, 1999.

Jeanette C. Takamura,

Assistant Secretary for Aging.

[FR Doc. 99–26097 Filed 10–5–99; 8:45 am]

BILLING CODE 4150–40–P

DEPARTMENT OF HEALTH AND HUMAN SERVICES

Centers for Disease Control and Prevention

Healthcare Infection Control Practices Advisory Committee (HICPAC): Meeting

In accordance with section 10(a)(2) of the Federal Advisory Committee Act (Pub. L. 92–463), the Centers for Disease Control and Prevention (CDC) announces the following meeting.

Name: Healthcare Infection Control Practices Advisory Committee (Formerly Hospital Infection Control Practices Advisory Committee).

Times and Dates:

8:30 a.m.–5 p.m., November 1, 1999.
8:30 a.m.–4 p.m., November 2, 1999.

Place: Sheraton Buckhead, Lennox Road, NE, Atlanta, Georgia 30326.

Status: Open to the public, limited only by the space available.

Purpose: The Committee is charged with providing advice and guidance to the Secretary, the Assistant Secretary for Health, the Director, CDC, and the Director, National Center for Infectious Diseases (NCID), regarding (1) the practice of hospital infection control; (2) strategies for surveillance, prevention, and control of infections (e.g., nosocomial infections), antimicrobial resistance, and related events in settings where healthcare is provided; and (3) periodic updating guidelines and other policy statements regarding prevention of healthcare associated infections and healthcare-related conditions.

Matters to be Discussed: Agenda items will include a review of proposed revisions to the Guidelines for Prevention of Nosocomial Pneumonia and Recommendations for Preventing VRE in Hospitals; plan(s) for collaboration between HICPAC and professional organizations in developing a Hand Hygiene Guideline; plan(s)for evaluation of HICPAC guidelines; review of the third draft of the Guideline for Environmental Controls in Healthcare Settings; and a review of CDC activities of interest to the Committee.

Agenda items are subject to change as priorities dictate.

CONTACT PERSON FOR MORE INFORMATION: Michele L. Pearson, M.D., Medical Epidemiologist, Investigation and Prevention Branch, Hospital Infections Program, NCID, CDC, 1600 Clifton Road, NE, M/S E–69, Atlanta, Georgia 30333, telephone 404/639–6413.

The Director, Management Analysis and Services Office has been delegated the authority to sign **Federal Register** notices pertaining to announcements of meetings and other committee management activities, for both the Centers for Disease Control and Prevention and the Agency for Toxic Substances and Disease Registry.

Dated: September 28, 1999.

Carolyn J. Russell,

Director, Management Analysis and Services Office, Centers for Disease Control and Prevention.

[FR Doc. 99–25960 Filed 10–5–99; 8:45 am]

BILLING CODE 4163–18–P

DEPARTMENT OF HEALTH AND HUMAN SERVICES

Centers for Disease Control and Prevention

Board of Scientific Counselors, National Institute for Occupational Safety and Health: Meeting

In accordance with section 10(a)(2) of the Federal Advisory Committee Act (Pub. L. 92–463), the Centers for Disease Control and Prevention (CDC) announces the following committee meeting:

Name: Board of Scientific Counselors, National Institute for Occupational Safety and Health (BSC, NIOSH).

Time and Date: 9 a.m.–4 p.m., November 18, 1999.

Place: The Washington Court, 525 New Jersey Avenue, NW, Washington, DC 20001–1527.

Status: Open to the public, limited only by the space available. The meeting room accommodates approximately 50 people.

Purpose: The BSC, NIOSH is charged with providing advice to the Director, NIOSH on NIOSH research programs. Specifically, the Board shall provide guidance on the Institute's research activities related to developing and evaluating hypotheses, systematically documenting findings, and disseminating results.

Matters to be Discussed: Agenda items include a report from the Director of NIOSH; Overview of FY99 NIOSH Grants Program; HearSafe 2000; NIOSH/NCI Diesel Study Update; NIOSH Strategic Surveillance Plan; Health Care Worker Research and Prevention Activities; Fire Fighter Initiative; and future activities of the Board.

Agenda items are subject to change as priorities dictate.

CONTACT PERSON FOR MORE INFORMATION: Bryan D. Hardin, Ph.D., Executive Secretary, BSC, NIOSH, Centers for Disease Control and Prevention, 1600 Clifton Road, NE, Atlanta, Georgia 30333, telephone 404/639–3773, fax 404/639–2170, e-mail: bdh1@cdc.gov.

The Director, Management Analysis and Services Office has been delegated the authority to sign **Federal Register** notices pertaining to announcements of meetings and other committee management activities, for both the Centers for Disease Control and Prevention and the Agency for Toxic Substances and Disease Registry.

Dated: September 30, 1999.

Carolyn J. Russell,

Director, Management Analysis and Services Office, Centers for Disease Control and Prevention.

[FR Doc. 99–25961 Filed 10–5–99; 8:45 am]

BILLING CODE 4163–19–P

DEPARTMENT OF HEALTH AND HUMAN SERVICES

Administration for Children and Families

Statement of Organization, Functions, and Delegations of Authority

This notice amends Part K of the Statement of Organization, Functions, and Delegations of Authority of the Department of Health and Human Services (DHHS), Administration for Children and Families (ACF) as follows: Chapter KB, the Administration on Children, Youth and Families (ACYF) (63 FR 58742), as last amended, November 2, 1998; Chapter KF, the Office of Child Support Enforcement (OCSE) (63 FR 42050), as last amended, August 6, 1998; and Chapter KP, the Office of the Deputy Assistant Secretary for Administration (ODASA) (63 FR 69297), as last amended, December 16, 1998. This notice reflects the realignment of the formula, entitlement and block grants function within ACF.

These Chapters are amended as follows:

1. Chapter KB, Administration on Children, Youth and Families

A. Delete KB.10 Organization in its entirety and replace with the following:

KB.10 Organization. The Administration on Children, Youth and Families is headed by a Commissioner, who reports directly to the Assistant Secretary for Children and Families and consists of:

Office of the Commissioner (KBA)
Office of Management Services (KBA1)
Office of Grant Management (KBA2)
Office of State Systems (KBA3)
Head Start Bureau (KBC)
Program Operations Division (KBC1)
Program Support Division (KBC2)
Children's Bureau (KBD)
Office of Child Abuse and Neglect (KBD1)
Division of Policy (KBD2)
Division of Program Implementation (KBD3)
Division of Data, Research and Innovation (KBD4)
Division of Child Welfare Capacity Building (KBD5)
Family and Youth Services Bureau (KBE)
Child Care Bureau (KBG)
Immediate Office/Administration (KBG1)
Program Operations Division (KBG2)
Policy Division (KBG3)
Technical Assistance Division (KBG4)

B. Delete KB.20 Functions, Paragraph A, in its entirety and replace with the following:

KB.20 Functions. A. The Office of the Commissioner serves as principal advisor to the Assistant Secretary for Children and Families, the Secretary, and other officials of the Department on the sound development of children, youth, and families. It provides executive direction and management strategy to ACYF components. The Deputy Commissioner assists the Commissioner in carrying out the responsibilities of the Office.

In the immediate Office of the Commissioner, research and evaluation staff plan and manage major research, evaluation, and data analysis activities. Additional staff perform special projects for the Office of the Commissioner. In addition to the Immediate Office, the Office of the Commissioner contains three organizational units. In support of the Commissioner and Deputy Commissioner and in consultation with ACYF programs the:

1. Office of Management Services manages the formulation and execution of the budgets for ACYF programs and for Federal administration; serves as the central control point for operational and long range planning; functions as Executive Secretariat for ACYF, including managing correspondence, correspondence systems, and electronic mail requests; reviews and manages clearance for program announcements for ACYF, the Administration for Native Americans, and the Administration on Developmental Disabilities; plans for coordinates the provision of staff development and training; provides support for ACYF's personnel administration, including staffing, employee and labor relations, performance management and employee recognition; manages procurement planning and provides technical assistance regarding procurement; plans for/oversees the discretionary grant paneling process; reviews and approves formula and entitlement programs for ACYF's bureaus and the Administration on Developmental Disabilities; manages ACYF-controlled space and facilities; performs manpower planning and administration; plans for, acquires, distributes and controls ACYF supplies; provides mail and messenger services; maintains duplicating, fax, and computer and computer peripheral equipment; supports and manages automation within ACYF; provides for health and safety; and oversees travel, time and attendance, and other administrative functions for ACYF.

The Office of Management Services also provides management and technical administration of formula and entitlement programs administered by the following ACF program offices: ACYF and ADD. It assures that all formula and entitlement awards conform with applicable statutes, regulations, and policies; computes grantee allocations; prepares formula and entitlement awards; ensures incorporation of necessary grant terms and conditions; monitors grantee expenditures; analyzes financial needs under formula and entitlement programs; provides data in support of apportionment requests; prepares reports and analyses on the grantee's use of funds; maintains liaison and coordination with appropriate ACF and HHS organizations to ensure consistency between ACF formula and entitlement grant systems and the Department's grant payment systems;

and performs audit resolution activities for formula and entitlement programs.

2. Office of Grants Management provides management and technical administration for discretionary grants for ACYF, the Administration on Developmental Disabilities (ADD), and the Administration for Native Americans (ANA); reviews, certifies and/or signs all discretionary grants; assures that all discretionary grants awarded by ACYF, ADD, and ANA conform with applicable statutes, regulations, and policies; computes grantee allocations, prepares discretionary grant awards, ensures, incorporation of necessary grant terms and conditions, and monitors grantee expenditures; analyzes financial needs under discretionary grant programs; provides data in support of apportionment requests; prepares reports and analyses on the grantee's use of funds; maintains liaison and coordination with appropriate ACF and HHS organizations to ensure consistency between ACYF, ADD, and ANA discretionary grant systems and the Department's grant payment systems; provides technical assistance to regional components on discretionary grant operations and technical grants management issues; and performs audit resolution activities for ACYF, ADD, and ANA discretionary grant programs. The Office of Grants Management coordinates and maintains liaison with the Department and other federal agencies on discretionary grants management and administration operational issues and activities.

3. Office of State Systems (OSS) approves advanced data processing planning documents; and reviews, assesses and inspects planning, design and operation of state management information systems. It directs state systems activities on partnership, collaborative efforts, and technical assistance activities. The Office provides leadership for provision of technical assistance to States on information systems projects; and advances the use of computer technology in the administration of child welfare and social services programs by States.

The Office reviews, analyzes, and approves/disapproves State requests for federal financial participation for automated systems development and activities which support the Child Care, Child Welfare, and Foster Care programs. It provides assistance to States in developing or modifying automation plans to conform to federal requirements. It monitors approved State systems development activities; conducts periodic reviews to assure State compliance with regulatory requirements applicable to automated systems supported by Federal financial participation. It provides guidance to States on functional requirements for these automated information systems. IT promotes interstate transfer of existing automated systems and provides assistance and guidance to improve ACF's programs through the use of automated systems.

II. Chapter KF, Office of Child Support Enforcement

A. Delete KF.10 Organization in its entirety and replace with the following:

KF.10 Organization. The Office of Child Support Enforcement is headed by a Director and consists of:

Office of the Director (KFA)
Office of Central Office Operations (KFB)
Division of Audit (KFB1)
Division of Program Operations (KFB2)
Division of Policy and Planning (KFB3)
Division of Consumer Services (KFB4)
Division of State and Local Assistance (KFB5)
Office of Automation and Special Projects (KFC)
Division of Child Support Information Systems (KFC4)
Office of Grants Management (KFD)
Office of Mandatory Grants (KFG)

B. Delete KF.20 Functions, Paragraph A, in its entirety and replace with the following:

KF.20 Functions. A. Office of the Director. The Director is also the Assistant Secretary for Children and Families and is directly responsible to the Secretary for carrying out OCSE's mission. The Deputy Director/ Commissioner has day-to-day operational responsibility for Child Support Enforcement programs. The Deputy Director/ Commissioner assists the Director in carrying out responsibilities of the Office and provides direction and leadership to the Office of Central Office Operations, Office of Automation and Special Projects, Office of Grants Management and the Office of Mandatory Grants.

The Office is responsible for developing regulations, guidance and standards for States to observe in locating absent parents; establishing paternity and support obligations and enforcing support obligations; maintaining relationships with Department officials, other federal departments, State and local officials, and private organizations and individuals interested in the CSE program; coordinating and planning child support enforcement activities to maximize program effectiveness; and approving all instructions, policies and publications issued by OCSE staff.

C. KF.20 Functions. Add paragraph E. Add the following to establish paragraph E.

E. Office of Mandatory Grants is headed by a Director who reports to the Deputy Director/Commissioner and provides management and technical administration of formula, entitlement and block grants administered by the following ACF program offices: OCSE; Office of Family Assistance (OFA); Office of Refugee Resettlement (ORR) and Office of Community Services (OCS). It assures that all formula, entitlement and block grant awards conform with applicable statutes, regulations, and policies; computes grantee allocations; prepares formula, entitlement and block grant awards; ensures incorporation of necessary grant terms and conditions; monitors grantee expenditures; analyzes financial needs under formula, entitlement and block grant programs; provides data in support of apportionment requests; prepares reports and analyses on the grantee's use of funds; maintains liaison and coordination with appropriate ACF and HHS organizations to ensure consistency between ACF formula, entitlement and block grant systems and the Department's grant payment systems; provides technical assistance to ACF program and regional components on formula, entitlement and block grant operations and technical grants management issues; and performs audit resolution activities for formula, entitlement and block grant programs. For OCSE and the other program offices served, provides liaison with the Department and other federal agencies on formula, entitlement and block grants management and administration operational issues and activities.

III. Chapter KP, Office of the Deputy Assistant Secretary for Administration

A. Delete KP.00 Mission in its entirety and replace with the following:

KP.00 Mission. The Deputy Assistant Secretary for Administration serves as principal advisor and counsel to the Assistant Secretary for Children and Families on all aspects of personnel administration and management, information resource management, financial, grants policy and procurement issues, staff development and training activities, organizational development and organizational analysis, administrative services and facilities management and state systems policy. Oversees the Executive Secretariat Office, the ACF Equal Employment Opportunity and Civil

Rights program and all special initiatives activities for ACF.

B. Delete KP.10 Organization in its entirety and replace with the following:

KP.10 Organization. The Office of the Deputy Assistant Secretary for Administration is headed by the Deputy Assistant Secretary who reports to the Assistant Secretary for Children and Families. The Office is organized as follows:

- Immediate Office of the Deputy Assistant Secretary for Administration (KPA)
- Office of Information Services (KPB)
- Office of Financial Service (KPC)
- Office of Acquisition Services and Organizational Development Initiatives (KPD)
- Office of Customer Service Administration (KPE)
- Office of State Systems Policy (KPF)
- Executive Secretariat Office (KPG)
- Office of Equal Employment Opportunity and Civil Rights (KPH)
- Office of Human Resource Management (KPJ)
- Office of Administrative Services and Facilities Management (KPL)

C. Delete KP.20 Functions, Paragraph A, in its entirety and replace with the following:

KP.20 Functions. A. Office of the Deputy Assistant Secretary for Administration (ODASA) directs and coordinates all administrative activities for the Administration for Children and Families. The Deputy Assistant Secretary for Administration serves as ACF's Chief Financial Officer (CFO); ACF's Chief Grants Management Officer; Federal Manager's Financial Integrity Act (FMFIA) Management Control Officer; Principal Information Resource Management Official serving as ACF's Chief Information Officer responsible for implementing the Information Technology Management Reform Act; and Reports Clearance Officer. The Deputy Assistant Secretary for Administration serves as the ACF liaison to the General Counsel and, as appropriate, initiates action in securing resolution of legal matters relating to management of the agency, and represents the Assistant Secretary on all administrative litigation matters.

The Deputy Assistant Secretary for Administration provides day-to-day executive leadership and direction to the Immediate Office of the Deputy Assistant Secretary for Administration, Executive Secretariat Office; Office of Administrative Services and Facilities Management; Office of Customer Service Administration; Office of Equal Employment Opportunity and Civil Rights; Office of Human Resource Management; Office of Information Service; Office of Financial Services; Office of Acquisition Services and Organizational Development Initiatives; and Office of State Systems Policy. The Deputy Assistant Secretary for Administration represents the Assistant Secretary in HHS and with other Federal agencies and task forces in defining objectives and priorities, and in coordinating activities associated with reinvention and continuous improvement initiatives. The Immediate Office of the Deputy Assistant Secretary is responsible for overseeing ODASA's salaries and expenses budget. Provides direction to meet the human resource management needs within ODASA; coordinates with the office which handles ACF's human resources activities and the Department to provide ODASA staff with personnel services including position management, staffing, recruitment, employee and labor relations, employee assistance, payroll, staff development and training, and special hiring and placement programs; and maintains systems to track personnel actions to keep the Deputy Assistant Secretary for Administration and, as appropriate, the Directors of offices within ODSAS informed about the status of personnel actions, and employee programs and benefits. All ODASA personnel related issues, performance management activities and other administrative functions within ODASA are handled within this office.

D. Delete KP.20 Functions, Paragraph C, in its entirety and replace with the following:

C. The Office of Financial Services (OFS) supports the Deputy Assistant Secretary for Administration in fulfilling ACF's Chief Financial Officer, Management Control Officer, and Chief Grants Officer responsibilities including preparation of the CFO 5 Year Plan; performs audit oversight and liaison activities, including preparing reports to Congress, Office of the General Counsel and the Office of the Inspector General. OFS writes/interprets financial policy and researches appropriation law issues; oversees and coordinates ACF's Federal Manager's Financial Integrity Act (FMFIA) activities; performs debt management functions; develops and administers quality assurance, training and certification programs for grants management; and is responsible for the annual preparation and audit of ACF's financial statement requirements. It develops/interprets internal policies and procedures for OFS components and coordinates the management of ACF's interagency agreement activities.

OFS provides agency-wide guidance to program and regional office staff on grant related issues; including developing and interpreting financial and grants policy, coordinating strategic grants planning, facilitating policy advisory groups, and assuring consistent grant program announcements. OFS prepares, coordinates and disseminates action transmittals, information memoranda, and other policy guidance on financial and grants management issues; provides financial and grants administration training and technical assistance to ACF staff and grantees; directs and/or coordinates management initiatives to improve financial administration of ACF mandatory and discretionary grant programs. OFS also develops and delivers grants management training to ACF program and financial staff.

E. Delete KP.20 Functions, Paragraph D, in its entirety and replace with the following.

D. The Office of Acquisition Services and Organizational Development initiatives (OASODI) provides leadership of assigned ACF special initiatives arising from Departmental, federal and non-federal directives to improve service delivery to customers and to enhance the employee work environment; develops policy and procedures for implementing organizational development activities; advises the Assistant Secretary, through the Deputy Assistant Secretary for Administration, on all aspects of organizational analysis including: planning for new organizational elements; and planning, organizing and performing studies, analyses and evaluations related to structural, functional and organizational issues, problems and policies to ensure organizational effectiveness; and provides centralized management and administration of acquisitions for ACF headquarters and regional components.

The Office of Acquisition Services and Organizational Development Initiatives serves as the ACF liaison with the Department and other federal and non-federal agencies to coordinate assigned cross-cutting ACF management improvement initiatives identified by the Department to improve service delivery to customers and to enhance the employee work environment. These assigned management initiatives include coordination and implementation of the HHS and ACF employee work life program; administrative guidance and support to the HHS and ACF Labor-Management Partnership Councils; coordination of Departmental and other employee surveys; and coordinating the

development of strategies and completing reports on progress of minority initiatives. The Office provides guidance to ACF program/staff/regional offices in developing strategies and implementation of initiatives; seeks counsel and advice from the Department and other federal agencies; and develops evaluation instruments to measure the success of ACF initiatives. The Office manages and coordinates designated incentive awards program. The Office also handles various federal initiatives.

The Office advises the Deputy Assistant Secretary for Administration on ACF organizational development activities; develops policies and procedures for implementing organizational development and other management improvement projects or programs; and applies tools and techniques such as re-engineering practices to design organizational development interventions aimed at improving ACF processes.

The Office provides technical assistance to ACF components on developing and finalizing reorganization proposals. As appropriate, the Office serves as liaison to the HHS Office of the Assistant Secretary for Management and Budget to coordinate organizational proposals requiring Secretarial approval; and prepares functional statements and official organizational charts. The Office administers ACF's system for review, approval, and documentation of delegations of authority.

The Office manages and administers all acquisitions for ACF headquarters and regional components; assures that all contracts awarded conform to applicable statutes, regulations and policies; develops ACF policies, procedures and instructions for the award and administration of all ACF acquisitions; reviews and interprets proposed HHS and OMB regulations; circulars and directives pertaining to acquisition management; solicits, negotiates, awards, modifies, terminates and close all acquisition issued by ACF; conducts the agency's Small and Disadvantaged Business Utilization Program; and provides training and technical assistance to program and staff components on significant acquisition policies and procedures. OASODI serves as the lead for ACF in coordination and liaison within ACF and with the Department, OMB, GSA and other federal agencies on procurement management issues and activities.

F. Delete KP.20 Functions, Paragraph E, in its entirety and replace with the following:

E. The Office of Customer Service Administration (OCSA) develops and maintains a customer service plan for the Deputy Assistant Secretary for Administration (DASA) and conducts customer surveys for the DASA; facilitates and assists in developing and writing standard operating procedures for all components within the Office of the Deputy Assistant Secretary for Administration (ODASA); assists in office-specific training of ODASA staff; assists ODASA components with the provision of office-specific and functional training to program and regional offices; coordinates permanent and temporary teams formed within ODASA; develops and maintains ODASA staff directory and users' guide for ODASA services.

G. Delete KF.20 Functions, Paragraph F, in its entirety and replace with the following:

F. Office of State Systems Policy is responsible for developing departmental policies and procedures under which States obtain Federal financial participation in the cost of automated systems development to support programs funded under the Social Security Act. It serves as the departmental focal point and coordinator for the development and implementation of strategies and policies related to payment integrity, welfare systems integration, electronic benefit transfer and related initiatives and programs; and provides leadership and guidance to interagency work groups in these areas for the Department.

The Office provides policy guidance, management leadership and coordination regarding the optimum inter-operation of the multitude of complex Federal, State, local, tribal and private information technology systems used to carry out ACF programs. The management leadership and coordination is provided in the areas of systems assessments, systems design and planning, systems integration, data exchanges, information management, information security and electronic information exchanges. The Office leads ACF activities associated with business continuity contingency planning and with information technology partnership planning which occurs between ACF and its program partners.

H. Delete KF.20 Functions, Paragraph H, in its entirety and replace with the following:

H. Office of Equal Employment Opportunity and Civil Rights (OEEOCR) serves as the principal advisor through the Deputy Assistant Secretary for Administration to the Assistant Secretary on all aspects of the Equal Employment Opportunity and Civil Rights program.

Serves as the liaison between ACF and the HHS Office for Civil Rights. The Office directs and manages the ACF Equal Employment Opportunity and Civil Rights program in accordance with Equal Employment Opportunity Commission (EEOC) regulations and HHS guidelines. Immediate oversight is provided by a staff under the direction of the ACF EEO Officer. Plans, develops, and evaluates programs and procedures designed to identify and eliminate discrimination in employment, training, incentive awards, promotion and career opportunities. Responsible for implementing and evaluation a cost-effective, timely, and impartial system for processing individuals complaints of discrimination under Title VII of the Civil Rights Act of 1964, as amended. Provides information, guidance, advice, and technical assistance to ACF supervisors and mangers on Affirmative Employment planning and other means of achieving parity and promoting work force diversity. Responsible for ensuring that ACF-conducted programs do not discriminate against recipients on the basis of race, color, national origin, age or disability. Monitors and implements civil rights compliance actions under Title VI, Section 504 of the Rehabilitation Act of 1973, as amended and the Age Discrimination Act of 1975, as amended. Implements the applicable provisions of the Americans with Disabilities Act of 1990.

I. Delete KF.20 Functions, Paragraph J, in its entirety and replace with the following:

J. The Office of Human Resource Management (OHRM) directs and manages the personnel operations and services for the Administration for Children and Families (ACF). Provides advice and assistance to ACT managers in their personnel management activities including workforce planning, recruitment, selection, position management, performance management, and designated performance and incentive awards. Provides a variety of service to ACF employees, including provision of employee assistance services and career, retirement and benefits counseling. Serves as ACF liaison to the Department on all payroll matters. Provides the following personnel administrative services: the exercise of appointing authority, position classification, awards authorization, personnel management evaluation, personnel action processing and recordkeeping. Manages the merit promotion, special hiring and placement programs. Provides leadership in directing and managing agency-wide staff development and training activities for ACF.

The Office provides leadership, oversight, and coordination for the planning, analysis, and development of human resource policies and programs. Serves as liaison between ACF, the Department, and the Office of Personnel Management. Provides technical advice and assistance on policy, legal and regulatory matters. Formulates and interprets policies pertaining to all areas related to personnel administration and management. Formulates and interprets new human resource programs and strategies.

Formulates and oversees the implementation of ACF-wide policies, regulations and procedures concerning all aspects of the Senior Executive Service (SES), and SES equivalent recruitment, staffing, position establishment, compensation, award, performance management and other related personnel areas. Manages the performance recognition systems and the responsibilities of the Executive Resources Board (ERB) and the Performance Review Board (PRB). Coordinates the Schedule C and Executive personnel activity with the Office of the Secretary. Is the focal point for data, reports, and analyses relating to SES, Schedule C and other executive personnel, such as those in Executive level positions.

Provides management advisory service on all labor management and employee relations issues. Plans and coordinates ACF-wide employee relations and labor relations activities, including the application and interpretation of the Federal Labor-Management Relations Program, collective bargaining agreements, disciplinary and adverse action regulations, and appeals. Pursues human relations innovations such as alternative dispute resolutions. Provides leadership in assuring the integrity, effectiveness and impartiality of ACF's alternative dispute resolution programs, grievances, and merit systems program. Participates in the formulation and implementation of policies, practices and matters affecting bargaining unit employees' working conditions by assuring management's compliance with the Federal Labor Relations Program (5 U.S.C. Chapter 71).

Administers ACF's personnel security responsibilities and ethics program. Coordinates the ethics program with the Department's Office of Special Counsel for Ethics.

The Office is responsible for the functional management of all program, common needs and management training in the agency, including policy development, guidance, and technical assistance and evaluation of aspects of program, career, employee, supervisory, management and executive training. Provides leadership in managing/overseeing and monitoring the ACF Training Resource Center.

Dated: September 28, 1999.

Olivia A. Golden,

Assistant Secretary for Children and Families.

[FR Doc. 99–26065 Filed 10–5–99; 8:45 am]

BILLING CODE 4184–01–M

DEPARTMENT OF HEALTH AND HUMAN SERVICES

Food and Drug Administration

[Docket No. 99N–4235]

Agency Emergency Processing Under OMB Review; Survey of Manufacturing Practices in the Dietary Supplement Industry

AGENCY: Food and Drug Administration, HHS.

ACTION: Notice.

SUMMARY: The Food and Drug Administration (FDA) is announcing that a proposed collection of information has been submitted to the Office of Management and Budget (OMB) for emergency processing under the Paperwork Reduction Act of 1995 (the PRA). The proposed collection of information is a survey of manufacturing practices of dietary supplement establishments. The objectives of the survey are to learn about the existing practices and to help the agency formulate a policy to ensure that dietary supplements are produced under conditions that will minimize safety problems resulting from manufacturing without imposing unnecessary costs to the industry. The survey will provide an understanding of the economic impact that any proposal to establish current good manufacturing practice (CGMP) regulations will have on both large and small firms in the dietary supplement industry.

DATES: Submit written comments on the collection of information by November 5, 1999.

ADDRESSES: Submit written comments on the collection of information to the Office of Information and Regulatory Affairs, OMB, New Executive Office Bldg., 725 17th St. NW., rm. 10235, Washington, DC 20503, Attn: Desk Officer for FDA. All comments should be identified with the docket number found in brackets in the heading of this document.

FOR FURTHER INFORMATION CONTACT: Peggy Schlosburg, Office of Information Resources Management (HFA–250), Food and Drug Administration, 5600 Fishers Lane, Rockville, MD 20857, 301–827–1223.

SUPPLEMENTARY INFORMATION:

FDA has requested emergency processing of this proposed collection of information under section 3507(j) of the PRA (44 U.S.C. 3507(j)) and 5 CFR 1320.13. The information is essential to the agency's mission of protecting and promoting public health. The use of normal PRA clearance procedures would be likely to result in public harm; several recent illnesses and deaths are suspected to have resulted from the lack of CGMP for dietary supplements. The hazards associated with poor manufacturing practices include chemical and biological contaminants, ingredients not identified on the label, and highly variable amounts of ingredients. In order to assess the effects of a CGMP regulation, the agency needs more information about existing manufacturing practices.

FDA invites comments on: (1) Whether the proposed collection of information is necessary for the proper performance of FDA's functions, including whether the information will have practical utility; (2) the accuracy of FDA's estimate of the burden of the proposed collection of information, including the validity of the methodology and assumptions used; (3) ways to enhance the quality, utility, and clarity of the information to be collected; and (4) ways to minimize the burden of the collection of information on respondents, including through the use of automated collection techniques, when appropriate, and other forms of information technology.

Title: Survey of Manufacturing Practices in the Dietary Supplement Industry

Under section 402(g)(2) of the Federal Food, Drug, and Cosmetic Act (21 U.S.C. 342(g)(2)), FDA may by regulation prescribe CGMP requirements for dietary supplements in order to ensure that dietary supplements are not adulterated during the manufacturing process. To gather information for use in developing CGMP regulations, FDA intends to conduct a survey of existing manufacturing practices for dietary supplements. Approximately 717 establishments will be selected from the universe of 2004 establishments in the Dietary Supplement Enhanced Establishment Database developed under contract by the Research Triangle Institute for the agency. The sample allocation is designed to yield 400 completed surveys. The survey will use a stratified systematic sample design with stratification by product type and

establishment size. The product types are vitamins and minerals, herbals and botanicals, herbal and botanical extracts, amino acids, proteins, animal extracts, tea-like products, concentrates/metabolites/constituents, and other dietary supplements. The survey is designed to determine the extent to which firm's operations use written procedures and maintain records to ensure that: (1) Personnel have the proper education, training and experience and are knowledgeable in disease control and other safety concerns; (2) buildings and facilities are maintained against contamination; (3) equipment is cleaned and sanitized; (4) quality control and laboratory operations determine that certificates of analysis are reliable and that identity and adulteration tests are conducted on raw materials and in-process formulations; (5) production and process controls use master and batch records as well as other records; (6) warehousing and distribution operations maintain records for forward and backward tracing of product; and (7) consumer complaints are handled and documented.

FDA estimates the burden of this collection of information as follows:

TABLE 1.—ESTIMATED ANNUAL REPORTING BURDEN [1]

Type of Survey	No. of Respondents	Annual Frequency per Response	Total Annual Responses	Hours per Response	Total Hours
Computer Assisted Telephone Interview (CATI)	400	1	400	1.13	452

[1] There are no capital costs or operating and maintenance costs associated with this collection of information.

These estimates are based on FDA's experience with conducting industry surveys.

Dated: September 30, 1999.

William K. Hubbard,

Senior Associate Commissioner for Policy, Planning and Legislation.

[FR Doc. 99–25899 Filed 10–5–99; 8:45 am]

BILLING CODE 4160–01–F

DEPARTMENT OF HEALTH AND HUMAN SERVICES

Food and Drug Administration

Anti-Infective Drugs Advisory Committee; Notice of Meeting

AGENCY: Food and Drug Administration, HHS.

ACTION: Notice.

This notice announces a forthcoming meeting of a public advisory committee of the Food and Drug Administration (FDA). The meeting will be open to the public.

Name of Committee: Anti-Infective Drugs Advisory Committee.

General Function of the Committee: To provide advice and recommendations to the agency on FDA's regulatory issues.

Date and Time: The meeting will be held on October 20 and 21, 1999, 8 a.m. to 5 p.m.

Location: Holiday Inn, Kennedy Grand Ballroom, 8777 Georgia Ave., Silver Spring, MD.

Contact: Rhonda W. Stover, Center for Drug Evaluation and Research (HFD–21), Food and Drug Administration, 5600 Fishers Lane, Rockville, MD 20857, 301–827–7001, or FDA Advisory Committee Information Line, 1–800–741–8138 (301–443–0572 in the Washington, DC area), code 12530. Please call the Information Line for up-to-date information on this meeting.

Agenda: On the morning of October 20, 1999, the committee will discuss the development of antimicrobial drugs for the treatment of catheter-related bloodstream infections.

On the afternoon of October 20, 1999, the committee will discuss new drug applications (NDA's) 20–634 and 20–635, levofloxacin (Levaquin™, The R.W. Johnson Pharmaceutical Research Institute) for the treatment of community-acquired pneumonia due to penicillin-resistant *Streptococcal pneumoniae*.

On October 21, 1999, the committee will discuss NDA 21–085, moxifloxacin (Avelox™, Bayer Corp. Pharmaceutical Division), for the treatment of community-acquired pneumonia, acute bacterial exacerbations of chronic bronchitis, skin and skin-structure infections, and acute sinusitis.

Procedure: Interested persons may present data, information, or views, orally or in writing, on issues pending before the committee. Written submissions may be made to the contact person by October 13, 1999. Oral presentations from the public will be scheduled between approximately 9 a.m. and 9:30 a.m. and between approximately 1 p.m. and 1:30 p.m. on October 20, 1999, and between approximately 8 a.m. and 8:30 a.m. on October 21, 1999. Time allotted for each presentation may be limited. Those desiring to make formal oral presentations should notify the contact person before October 13, 1999, and submit a brief statement of the general nature of the evidence or arguments they wish to present, the names and addresses of proposed participants, and an indication of the approximate time requested to make their presentation.

FDA regrets that it was unable to publish this notice 15 days prior to the October 20, 1999, Anti-Infective Drugs Advisory Committee meeting. Because the agency believes there is some urgency to bring these issues to public discussion and qualified members of the Anti-Infective Drugs Advisory Committee were available at this time, the Commissioner concluded that it was in the public interest to hold this meeting even if there was not sufficient time for the customary 15-day public notice.

Notice of this meeting is given under the Federal Advisory Committee Act (5 U.S.C. app. 2).

Dated: September 29, 1999.

Linda A. Suydam,

Senior Associate Commissioner.

[FR Doc. 99–25970 Filed 10–5–99; 8:45 am]

BILLING CODE 4160–01–F

DEPARTMENT OF HEALTH AND HUMAN SERVICES

Food and Drug Administration

Consumer Round Table; Notice of Meeting

AGENCY: Food and Drug Administration, HHS.

ACTION: Notice of meeting.

The Food and Drug Administration (FDA) is announcing the following meeting: ''Consumer Round Table—Risk Management in a Diverse Society.'' This meeting will provide an opportunity for consumers to engage in an open dialogue with senior officials on how FDA ensures drug safety and manages and communicates the risks and benefits of drug products.

Date and Time: The meeting will be held on Tuesday, October 26, 1999, from 8 a.m. to 3:30 p.m.

Location: The meeting will be held at the Hilton-Houston Southwest, Regency Ballroom, 6780 Southwest Freeway, Houston, TX 77074, 713–977–7911, FAX 713–974–5808.

Contact: Sheryl Lunnon-Baylor, Dallas District Office (HFR–SW1580), Food and Drug Administration, 1445 North Loop West, suite 420, Houston, TX 77008, 713–802–9095, ext. 115, FAX 713–802–0906.

Registration: Send registration information (including name, title, organization title, mailing address, telephone number, and fax number) to the contact person by October 15, 1999.

If you need special accommodations due to a disability, please contact Sheryl Lunnon-Baylor (address above) at least 7 days in advance.

Executive Summary: An executive summary of the meeting may be requested in writing from the Freedom of Information Office (HFI–35), Food and Drug Administration, 5600 Fishers Lane, Room 12A–16, Rockville, MD 20852, approximately 15 working days after the meeting at a cost of 10 cents per page.

Dated: September 30, 1999.

William K. Hubbard,

Senior Associate Commissioner for Policy, Planning and Legislation.

[FR Doc. 99–25969 Filed 10–5–99; 8:45 am]

BILLING CODE 4160–01–F

DEPARTMENT OF HEALTH AND HUMAN SERVICES

National Institutes of Health

Government-Owned Inventions; Availability for Licensing

AGENCY: National Institutes of Health, Public Health Service, DHHS.

ACTION: Notice.

SUMMARY: The invention listed below is owned by an agency of the U.S. Government and is available for licensing in the U.S. in accordance with 35 U.S.C. 207 to achieve expeditious commercialization of results of federally funded research and development.

ADDRESSES: Licensing information and a copy of the U.S. patent application referenced below may be obtained by contacting J.R. Dixon, Ph.D., at the Office of Technology Transfer, National Institutes of Health, 6011 Executive Boulevard, Suite 325, Rockville, Maryland 20852–3804 (telephone 301/496–7056, ext. 206; fax 301/402–0220; E-Mail: jd212g@NIH.GOV). A signed Confidential Disclosure Agreement is required to receive a copy of any patent application.

SUPPLEMENTARY INFORMATION:

Title: ''Diagnostic and Therapeutic Methods of Detecting and Treating Cancers of Reproductive Tissues.''

Inventors: Drs. Ira H. Pastan (NCI), Ulrich Brinkmann (NCI), George Vasmatzis (NCI) and Byungkook Lee (NCI).

DHHS Ref. No. E–028–99/0—Filed with the U.S.P.T.O. September 1, 1998.

Background

The basis of cancer immunotherapy as a viable option of treatment rests on the supposition that tumor-specific antigens are expressed by the tumor cells, and that immune effector mechanisms can be induced selectively to destroy these tumor cells. Although a variety of host immune effector cells have been shown to participate in the killing of tumor cells, tumor-specific CD8+ Cytotoxic T Lymphocytes (''CTL'') are highly specific and effective in mediating tumor cell killing. CTLs that recognize tumor cells have been isolated from melanoma, breast, ovarian, renal, lung, colorectal and prostrate cancer patients. Their existence suggests that there is an immune response to cancer in these patients and that its augmentation might be therapeutically beneficial. Thus, approaches based on induction of tumor-specific CTLs by therapeutic vaccines may provide an attractive alternative for treating cancer patients.

Technology

PAGE–4 is a human X-linked gene that is strongly expressed in prostate and prostate cancer, and is also expressed in other male and female reproductive tissue (*e.g.*, testis, fallopian tube, placenta, uterus, and uterine cancer). PAGE–4 shows similarity with the GAGE protein family, but it diverges significantly from members of the family so that it appears to belong to a separate family. This, and the existence of another gene, PAGE–2, that share more homology with PAGE–4 than with members of the GAGE family indicates that the PAGE–4 protein belongs to a separate protein family.

The specific detection of PAGE–4 might be valuable for the diagnosis of prostate and testicular tumors, as well as uterine tumors. There are sufficient differences between PAGE–4 and other members of the PAGE and MAGE proteins to produce specific antibodies. Analyses with such antibodies are needed to confirm by immunohistology the expression specificity that is seen in database and mRNA analyses, and to evaluate whether anti-PAGE–4 immunotherapy could be a promising therapeutic approach. One possibility of eliminating PAGE–4 expressing cells could be to use it as cancer vaccine. Among the many possible approaches to vaccination, one method is direct vaccination with plasmid DNA. In fact, Dr. Pastan's laboratory has been able to obtain good expression of the PAGE–4 protein with mammalian expression plasmids, and has demonstrated that DNA-immunization with such expression constructs leads to good immune responses. Hence, this method may generate anti-PAGE–4 responses, and allow us to analyze if ''PAGE–4-vaccination'' can eliminate PAGE–4 expressing cells, as a therapeutic approach towards neoplasms of the prostate, testis, and uterus.

Prostate Cancer

Prostate Cancer is a disease affecting approximately 1 million men in the U.S.A., with an annual incidence of around 300,000 and approximately 40,000 deaths per year. Control of primary tumor by surgical resection and/or radiation has proven effective in a number of cases, however, metastatic spread, primarily to the bone, especially at late hormone independent stages of the disease, has been more difficult to control and monitor.

The above mentioned invention is available, including any available foreign intellectual property rights, for licensing on an exclusive or non-exclusive basis.

Dated: September 28, 1999.

Jack Spiegel, Ph.D.,

Director, Division of Technology Development & Transfer, Office of Technology Transfer.

[FR Doc. 99–25950 Filed 10–5–99; 8:45 am]

BILLING CODE 4140–01–M

DEPARTMENT OF HEALTH AND HUMAN SERVICES

National Institutes of Health

Government-Owned Inventions; Availability for Licensing

AGENCY: National Institutes of Health, Public Health Service, DHHS.

ACTION: Notice.

SUMMARY: The inventions listed below are owned by agencies of the U.S. Government and are available for licensing in the U.S. in accordance with 35 U.S.C. 207 to achieve expeditious commercialization of results of federally-funded research and development. Foreign patent applications are filed on selected inventions to extend market coverage

for companies and may also be available for licensing.

ADDRESSES: Licensing information and copies of the U.S. patent applications listed below may be obtained by writing to the indicated licensing contact at the Office of Technology Transfer, National of Health, 6011 Executive Boulevard, Suite 325, Rockville, Maryland 20852–3804; telephone: 301/496–7057; fax: 301/402–0220. A signed Confidential Disclosure Agreement will be required to receive copies of the patent applications.

Adenoviral Vector Expressing a SV4OT Antigen Antisense RNA

David S. Schrump, Z. Sheng Guo, Ishrat Wahseed (NCI)
Serial No. 60/124,776 filed 17 Mar 1999
Licensing Contact: Richard U. Rodriguez; 301/496–7056 ext. 287; e-mail: rr154z@nih.gov

Desired nucleic acid sequences with therapeutic potential may be introduced into mammalian cells using appropriate vectors. Antisense technology is well known in the art and describes a mechanism whereby a nucleic acid comprising a nucleotide sequences, which is in a complementary, ''antisense'' orientation with respect to a coding or ''sense'' sequence of an endogenous gene, is introduced into a cell, whereby a duplex forms between the antisense sequence and its complementary sense sequence. The formation of this duplex results in inactivation of the endogenous gene.

The present invention describes a method of treatment of cancer by administering a replication-deficient recombinant adenovirus comprising a nucleic acid that encodes an antisense rebonucleic acid to the SV40 T antigene. In addition, it provides methods for reducing the level of expression of SV40 T antigen, induction of apoptosis, effecting cell growth arrest, reducing the levels of proto-oncogene expression, unregulating pro-apoptotic proteins, maintaining normal levels of functional p53, and maintaining normal levels of functional Rb, p107, and p130. The types of cancers contemplated by this invention include all cancers that express SV40 T antigen.

Aspartic Protease Inhibitors, Compositions, and Associated Therapeutic methods

Ramnarayan S. Randad, John W. Erickson, Michael A. Eissenstat, Lucyna Lubkowska (NCI)
Serial No. 60/114,868 filed 06 Jan 1999
Licensing Contact: John Peter Kim; 301/496–7056 ext. 264; e-mail: jk141n@nih.gov

The human immunodeficiency virus (HIV) is the causative agent of acquired immunodeficiency syndrome (AIDS). Drug-resistance is a critical factor contributing to the gradual loss of clinical benefit to treatments for HIV infection. Accordingly, combination therapies have further evolved to address the mutating resistance of HIV. However, there has been great concern regarding the apparent growing resistance of HIV strains to current therapies.

The subject invention provides compounds which may serve as therapeutic candidates for inhibition of HIV–1 PR (protease) and thus serve in controlling AIDS, as well as having anti-malarial properties. These compounds may be used in combination with other protease inhibitors or inhibitors of HIV–1 reverse transcriptase, especially in patients who have developed resistance to other HIV protease inhibitors. These inhibitors have high potency, lower molecular weight, and lower lipophilicity than previous compounds, as well as a better profile towards drug resistant mutant strains of HIV.

2,5-Diamino-3,4-Disubstituted-1,6-Diphenylhexane Isosteres Comprising Benzamide, Sulfonamide and Anthranilamide Subunits and Methods of Using

Ramnarayan S. Randad and John W. Erickson (NCI)
Serial Nos. 09/039,669 and 09/039,670 filed 16 Mar 1998; Serial No. 08/359,612 filed 20 Dec 1994
Licensing Contact: John Peter Kim; 301/496–7056, ext. 264; e-mail: jk141n@nih.gov

The human immunodeficiency virus (HIV) is the causative agent of acquired immunodeficiency syndrome (AIDS). Drug-resistance is a critical factor contributing to the gradual loss of clinical benefit to treatments for HIV infection. Accordingly, combination therapies have further evolved to address the mutating resistance of HIV. However, there has been great concern regarding the apparent growing resistance of HIV strains to current therapies.

The subject invention provides for treatment and prevention of HIV infection and/or AIDS. The invention provides for 2,5-diamino-3,4-disubstituted-1,6-diphenylhexane (DAD) isosteres comprising benzamide, sulfonamide, and anthranilamide subunits; a pharmaceutical composition comprising such compounds; a method of using such compounds to treat retroviral, specifically HIV and more specifically HIV–1 and HIV–2, infections in mammals, particularly humans; a method of synthesizing asymmetric DAD isosteres comprising benzamide, sulfonamide, and anthranilamide subunits; and a method of using such compounds to assay new compounds; for antiretroviral activity.

Novel Tumor Necrosis Factor Family Member, DRL, and Related Compositions and Methods

MJ Lenardo, J Wang, Di Jiang (NIAID)
Serial No. 60/106,976 filed 04 Nov 1998
Licsening Contact: Susan S. Rucker; 301/496–7056 ext. 245; e-mail: sr156v@nih.gov

The invention described and claimed in this patent application relates the isolation, cloning and characterization of a ligand which belongs to the TNF family of cytokines. This ligand, named DRL (also known as APRIL and TNFSF13), is a type II membrane protein of 250 amino acids. The gene encoding DRL is found on the short arm of chromosome 17 at 17 p11.2–12. Soluble DRL can be obtained by preparing a DRL–IgG fusion protein utilizing the extracellular domain of DRL. DRL has been demonstrated to play a significant role in T cell activation and is able to induce crosslinking of the T cell receptor. It is also capable of inducing T cell proliferation. These results suggest that DRL may be a target to be exploited in the treatment of conditions related to inappropriate T cell activation such as autoimmune diseases, tissue rejection and graft vs. host disease.

Methods and Compositions of Chemokine-Tumor Antigen Fusion Proteins as Cancer Vaccines

Larry W. Kwak, Arya Biragyn (NCI)
U.S. Provisional Patent Application 60/077,745 filed 12 Mar 1998 (corresponding to PCT/US99/05345 filed 12 Mar 1999)
Licensing Contact: Elaine Gese; 301/496–7056 ext. 282; e-mail: 3g46t@nih.gov

The current invention embodies a broad range of fusion proteins, each of which consists of a chemokine and a tumor or viral antigen. Administration of these fusion proteins, or a nucleic acid encoding the fusion protein, elicits a specific and potent *in vivo* immune response directed against the antigen, thereby effectively inhibiting the growth of cells expressing that antigen. The fusion proteins or DNA vaccines therefore represent potential vaccines for use against cancer and also against human immunodeficiency virus (HIV) infection.

Dated: September 27, 1999.

Jack Spiegel,

Director, Division or Technology Development and Transfer, Office of technology Transfer, National Institutes of Health.

[FR Doc. 99–25952 Filed 10–5–99; 8:45 am]

BILLING CODE 4140–01–M

DEPARTMENT OF HEALTH AND HUMAN SERVICES

National Institutes of Health

Office of the Director, National Institutes of Health; Notice of Meeting

Pursuant to section 10(a) of the Federal Advisory Committee Act, as amended (5 U.S.C. Appendix 2), notice is hereby given of a meeting of the Director's Council of Public Representatives.

The meeting will be open to the public, with attendance limited to space available. Individuals who plan to attend and need special assistance, such as sign language interpretation or other reasonable accommodations, should notify the Contact Person listed below in advance of the meeting.

Name of Committee: Director's Council of Public Representatives.

Date: October 21, 1999.

Time: 8:30 a.m. to 3:30 p.m.

Agenda: Among topics proposed for discussion are: (1) NCI research program relating to health disparities; (2) PubMed Central (repository for electronic dissemination of life sciences research); (3) NIH international research program; (4) privacy of research information; and (5) public involvement in programs of the NEI, NICHD, NIGMS, and NIAAA.

Place: National Institutes of Health, Building 31, C Wing, Conference Room 10, 9000 Rockville Pike, Bethesda, MD 20892.

Contact Person: Anne Thomas, Director, Office of Communications and Public Liaison, Office of the Director, National Institutes of Health, 9000 Rockville Pike, Building 1, Room 344, Bethesda, MD 20892, (301) 496–4461.

This notice is being published less than 15 days prior to the meeting due to the timing limitations imposed by the review and funding cycle.

(Catalogue of Federal Domestic Assistance Program Nos. 93.14, Intramural Research Training Award; 93.187, Undergraduate Scholarship Program for Individuals from Disadvantaged Backgrounds; 93.22, Clinical Research Loan Repayment Program for Individuals from Disadvantaged Backgrounds; 93.232, Loan Repayment Program for Research Generally; 93.39, Academic Research Enhancement Award; 93.936, NIH Acquired Immunodeficiency Syndrome Research Loan Repayment Program, National Institutes of Health, HHS)

Dated September 29, 1999.

Nancy Middendorf,

Acting Director, Office of Federal Advisory Committee Policy.

[FR Doc. 99–25946 Filed 10–5–99; 8:45 am]

BILLING CODE 4140–01–M

DEPARTMENT OF HEALTH AND HUMAN SERVICES

National Institutes of Health

National Center for Research Resources; Notice of Meeting

Notice is hereby given of a meeting of an *ad hoc* National Gene Vector Laboratories Panel. The meeting will be held October 26, 1999, from 10:30 a.m. until 5 p.m. at the Hyatt Regency Bethesda, One Bethesda Metro Center, Bethesda, Maryland. The meeting is open to the public, and will be limited to space available. The purpose of the meeting is to discuss the scope of future National Gene Vector Laboratory activities.

For detailed information on the meeting, an agenda, or a list of panel members, contact Dr. Richard Knazek, Clinical Research, National Center for Research Resources, 6705 Rockledge Drive, Suite 6030, MSC 7965, Bethesda, MD 20892–7965, 301–435–0790.

Any person wishing to provide information to the panel may do so in writing. Written comments should be sent to Dr. Knazek at the above address, and must be received by close of business October 19, 1999.

Individuals who plan to attend and need special assistance, such as sign language interpretation or other reasonable accommodations, should contact Dr. Knazek in advance of the meeting.

Dated: September 23, 1999.

LaVerne Y. Stringfield,

Director, Office of Federal Advisory Committee Policy.

[FR Doc. 99–25954 Filed 10–5–99; 8:45 am]

BILLING CODE 4140–01–M

DEPARTMENT OF HEALTH AND HUMAN SERVICES

National Institutes of Health

National Heart, Lung, and Blood Institute; Notice of Closed Meetings

Pursuant to section 10(d) of the Federal Advisory Committee Act, as amended (5 U.S.C. Appendix 2), notice is hereby given of the following meetings.

The meetings will be closed to the public in accordance with the provisions set forth in sections 552b(c)(4) and 552b(c)(6), Title 5 U.S.C., as amended. The grant applications and/or contract proposals and the discussions could disclose confidential trade secrets or commercial property such as patentable material, and personal information concerning individuals associated with the grant applications and/or contract proposals, the disclosure of which would constitute a clearly unwarranted invasion of personal privacy.

Name of Committee: National Heart, Lung, and Blood Institute Special Emphasis Panel, WISE Extension Review.

Date: October 25, 1999.

Time: 3 p.m. to 6 p.m.

Agenda: To review and evaluate grant applications.

Place: Holiday Inn Chevy Chase, 5520 Wisconsin Avenue, Chevy Chase, MD 20815.

Contact Person: David T. George, PhD, NIH, NHLBI, DEA, Review Branch, Rockledge Building II, Room 7188, 6701 Rockledge Drive, Bethesda, MD 20892–7924, 301/435–0288.

Name of Committee: National Heart, Lung, and Blood Institute Special Emphasis Panel, ''Iron Overload and Hereditary Hemochromatosis Study—Coordinating Center''.

Date: October 26–27, 1999.

Time: October 26, 1999, 7 p.m. to 9 p.m.

Agenda: To review and evaluate contract proposals.

Place: Holiday Inn Chevy Chase, 5520 Wisconsin Avenue, Chevy Chase, MD 20815.

Time: October 27, 1999, 8:30 a.m. to 2 p.m.

Agenda: To review and evaluate contract proposals.

Place: Holiday Inn Chevy Chase, 5520 Wisconsin Avenue, Chevy Chase, MD 20815.

Contact Person: Diane M. Reid, MD, Scientific Review Administrator, NIH, NHLBI, DEA, Two Rockledge Center, 6701 Rockledge Drive, Room 7182, Bethesda, MD 20892–7924, (301) 435–0277.

Name of Committee: National Heart, Lung, and Blood Institute Special Emphasis Panel, Minority Training Grant Applications.

Date: December 9–10, 1999.

Time: December 9, 1999, 7:30 p.m. to 9 p.m.

Agenda: To review and evaluate grant applications.

Place: Holiday Inn—Silver Spring, 8777 Georgia Avenue, Silver Spring, MD 20910.

Time: December 10, 1999, 8:30 a.m. to 4 p.m.

Agenda: To review and evaluate grant applications.

Place: Holiday Inn—Silver Spring, 8777 Georgia Avenue, Silver Spring, MD 20910.

Contact Person: Terry Bishop, PhD, Scientific Review Administrator, Review Branch, NIH, NHLBI, DEA, Rockledge Center II, 6701 Rockledge Drive, Suite 7210, Bethesda, MD 20892–7924, (301) 435–0303.

(Catalogue of Federal Domestic Assistance Program Nos. 93.233, National Center for Sleep Disorders Research; 93.837, Heart and Vascular Diseases Research; 93.838, Lung Diseases Research; 93.839, Blood Diseases

and Resources Research, National Institutes of Health, HHS)

Dated: September 28, 1999.

Nancy Middendorf,

Acting Director, Office of Federal Advisory Committee Policy.

[FR Doc. 99–25943 Filed 10–05–99; 8:45 am]

BILLING CODE 4140–01–M

DEPARTMENT OF HEALTH AND HUMAN SERVICES

National Institutes of Health

National Heart, Lung, and Blood Institute; Notice of Closed Meeting

Pursuant to section 10(d) of the Federal Advisory Committee Act, as amended (5 U.S.C. Appendix 2), notice is hereby given of the following meeting.

The meeting will be closed to the public in accordance with the provisions set forth in sections 552b(c)(4) and 552b(c)(b), Title 5 U.S.C., as amended. The grant applications and the discussions could disclose confidential trade secrets or commercial property such as patentable material, and personal information concerning individuals associated with the grant applications, the disclosure of which would constitute a clearly unwarranted invasion of personal privacy.

Name of Committee: National Heart, Lung, and Blood Institute Special Emphasis Panel, Career Development Review.

Date: October 26, 1999.

Time: 8 a.m. to 4 p.m.

Agenda: To review and evaluate grant applications.

Place: Chevy Chase Holiday Inn, 5520 Wisconsin Ave., Chevy Chase, MD 20815.

Contact Person: Eric H. Brown, Phd, Scientific Review Administrator, NIH, NHLBI, DEA, Rockledge Building II, 6701 Rockledge Drive, Suite 7204, Bethesda, MD C 7956, (301) 435–0299, browne@gwgate.nhlbi.nih.gov.

(Catalogue of Federal Domestic Assistance Program Nos. 93.233, National Center for Sleep Disorders Research; 93.837, Heart and Vascular Research; 93.838, Lung Diseases Research; 93.839, Blood Diseases and Resources Research, National Institutes of Health, HHS)

Dated: September 29, 1999.

Nancy Middendorf,

Acting Director, Office of Federal Advisory Committee Policy.

[FR Doc. 99–25947 Filed 10–5–99; 8:45 am]

BILLING CODE 4140–01–M

DEPARTMENT OF HEALTH AND HUMAN SERVICES

National Institutes Of Health

National Institute of Neurological Disorders and Stroke; Notice of Closed Meeting

Pursuant to section 10(d) of the Federal Advisory Committee Act, as amended (5 U.S.C. Appendix 2), notice is hereby given of the following meeting.

The meeting will be closed to the public in accordance with the provisions set forth in sections 552b(c)(4) and 552b(c)(6), Title 5 U.S.C., as amended. The contract proposals and the discussions could disclose confidential trade secrets or commercial property such as patentable material, and personal information concerning individuals associated with the contract proposals, the disclosure of which would constitute a clearly unwarranted invasion of personal privacy.

Name of Committee: National Institute of Neurological Disorders and Stroke Special Emphasis Panel.

Date: October 13, 1999.

Time: 12 p.m. to 2 p.m.

Agenda: To review and evaluate contract proposals.

Place: Neuroscience Center, National Institutes of Health, 6001 Executive Blvd., Bethesda, MD 20892, (Telephone Conference Call).

Contact Person: Phillip F. Wiethorn, Scientific Review Administrator, Scientific Review Branch, NINDS/NIH/DHHS, Neuroscience Center, 6001 Executive Blvd, Suite 3208, MSC 9529, Bethesda, MD 20892–9529, 301–496–9223.

This notice is being published less than 15 days prior to the meeting due to the timing limitations imposed by the review and funding cycle.

(Catalog of Federal Domestic Assistance Program Nos. 93.853, Clinical research Related to Neurological Disorders; 93.854, Biological Basis Research in the Neurosciences, National Institutes of Health, HHS)

Dated: September 28, 1999.

Nancy Middendorf,

Acting Director, Office of Federal Advisory Committee Policy.

[FR Doc. 99–25941 Filed 10–5–99; 8:45 am]

BILLING CODE 4140–01–M

DEPARTMENT OF HEALTH AND HUMAN SERVICES

National Institutes of Health

National Institutes of General Medical Sciences; Notice of Closed Meeting

Pursuant to section 10(d) of the Federal Advisory Committee Act, as amended (5 U.S.C. Appendix 2), notice is hereby given of the following meeting.

The meeting will be closed to the public in accordance with the provisions set forth in sections 552b(c)(4) and 552b(c)(6), Title 5 U.S.C. as amended. The grant applications and the discussions could disclose confidential trade secrets or commercial property such as patentable material, and personal information concerning individuals associated with the grant applications, the disclosure of which would constitute a clearly unwarranted invasion of personal privacy.

Name of Committee: National Institute of General Medical Sciences Special Emphasis Panel, Large Scale Collaborative Project Awards.

Date: October 12, 1999.

Time: 8 a.m. to 5 p.m.

Agenda: To review and evaluate grant applications.

Place: Holiday Inn, Chevy Chase, 5520 Wisconsin Avenue, Chevy Chase, MD 20815.

Contact Person: Helen R. Sunshine, PhD, Chief, Office of Scientific Review, NIGMS, Natcher Building, Room 1AS–13, Bethesda, MD 20892, (301) 594–2881.

This notice is being published less than 15 days prior to the meeting due to the timing limitations imposed by the review and funding cycle.

(Catalogue of Federal Domestic Assistance Program Nos. 93.375, Minority Biomedical Research Support; 93.821, Cell Biology and Biophysics Research; 93.859, Pharmacology, Physiology, and Biological Chemistry Research; 93.862, Genetics and Developmental Biology Research; 93.88, Minority Access to Research Careers; 93.96. Special Minority Initiatives, National Institutes of Health, (HHS)

Dated: September 28, 1999.

Nancy Middendorf,

Acting Director, Office of Federal Advisory Committee Policy.

[FR Doc. 99–25942 Filed 10–5–99; 8:45 am]

BILLING CODE 4140–01–M

DEPARTMENT OF HEALTH AND HUMAN SERVICES

National Institutes of Health

National Institute on Deafness and Other Communication Disorders; Notice of Closed Meeting

Pursuant to section 10(d) of the Federal Advisory Committee Act, as amended (5 U.S.C. Appendix 2), notice is hereby given of the following meeting.

The meeting will be closed to the public in accordance with the provisions set forth in sections 552b(c)(4) and 552b(c)(6), Title 5 U.S.C., as amended. The grant applications and

the discussions could disclose confidential trade secrets or commercial property such as patentable material, and personal information concerning individuals associated with the grant application, the disclosure of which would constitute a clearly unwarranted invasion of personal privacy.

Name of Committee: National Institute on Deafness and Other Communications Disorders Special Emphasis Panel.

Date: November 3, 1999.

Time: 8 a.m. to 5 p.m.

Agenda: To review and evaluate grant applications.

Place: The River Inn, 924 25th Street, Washington, DC 20037.

Contact Person: Stanley C. Oaks, Jr., PhD, Scientific Review Branch, Division of Extramural Activities, Executive Plaza South, Room 400C, 6120 Executive Blvd., Bethesda, MD 20892–7180, 301–496–8683, so14s@nih.gov.

(Catalogue of Federal Domestic Assistance Program Nos. 93.173, Biological Research Related to Deafness and Communicative Disorders, National Institutes of Health, HHS)

Dated: September 28, 1999.

Nancy Middendorf,

Acting Director, Office of Federal Advisory Committee Policy.

[FR Doc. 99–25944 Filed 10–5–99; 8:45 am]

BILLING CODE 4140–01–M

DEPARTMENT OF HEALTH AND HUMAN SERVICES

National Institutes of Health

National Institute on Aging; Notice of Closed Meetings

Pursuant to section 10(d) of the Federal Advisory Committee Act, as amended (5 U.S.C. Appendix 2), notice is hereby given of the following meetings.

The meetings will be closed to the public in accordance with the provisions set forth in sections 552b(c)(4) and 552b(c)(6), Title 5 U.S.C., as amended. The grant applications and the discussions could disclose confidential trade secrets or commercial property such as patentable material, and personal information concerning individuals associated with the grant applications, the disclosure of which would constitute a clearly unwarranted invasion of personal privacy.

Name of Committee: National Institute on Aging Special Emphasis Panel, Review of R03.

Date: October 15, 1999.

Time: 9 a.m. to 5 p.m.

Agenda: To review and evaluate grant applications.

Place: Embassy Suites, 4300 Military Road, NW, Chevy Chase, MD 20015.

Contact Person: Mary Ann Guadagno, PhD, The Bethesda Gateway Building, 7201 Wisconsin Avenue/Suite 2C212, Bethesda, MD 20892, (301) 496–9666.

Name of Committee: National Institute on Aging Special Emphasis Panel, Molecular Substrates of Aging and Neuron Death.

Date: October 18–19, 1999.

Time: 7 a.m. to 4 p.m.

Agenda: To review and evaluate grant applications.

Place: Sheraton University Hotel, 36th and Chestnut Street, Philadelphia, PA 19104.

Contact Person: Arthur D. Schaerdel, DVM, The Bethesda Gateway Building, 7201 Wisconsin Avenue/Suite 2C212, Bethesda, MD 20892, (301) 496–9666.

Name of Committee: National Institute of Aging Initial Review Group, Neuroscience of Aging Review Committee.

Date: November 1–3, 1999.

Time: 7 a.m. to 2 p.m.

Agenda: To review and evaluate grant applications.

Place: The Hyatt Regency Hotel, 100 Bethesda Metro Center, Bethesda, MD 20814.

Contact Person: Louise L. Hsu, PhD, SRA, The Bethesda Gateway Building, 7201 Wisconsin Avenue/Suite 2C212, Bethesda, MD 20892, (301) 496–9666.

(Catalogue of Federal Domestic Assistance Program Nos. 93.866, Aging Research, National Institutes of Health, HHS)

Dated: September 28, 1999.

Nancy Middendorf,

Acting Director, Office of Federal Advisory Committee Policy.

[FR Doc. 99–25945 Filed 10–5–99; 8:45 am]

BILLING CODE 4140–01–M

DEPARTMENT OF HEALTH AND HUMAN SERVICES

National Institutes of Health

National Institute of Environmental Health Sciences; Notice of Closed Meeting

Pursuant to section 10(d) of the Federal Advisory Committee Act, as amended (5 U.S.C. Appendix 2), notice is hereby given of the following meeting.

The meeting will be closed to the public in accordance with the provisions set forth in sections 552b(c)(4) and 552b(c)(6), Title 5 U.S.C., as amended. The grant applications and the discussions could disclose confidential trade secrets or commercial property such as patentable material, and personal information concerning individuals associated with the grant applications, the disclosure of which would constitute a clearly unwarranted invasion of personal privacy.

Name of Committee: Environmental Health Sciences Review Committee.

Date: November 4–5, 1999.

Time: 8:30 a.m. to 5 p.m.

Agenda: To review and evaluate grant applications.

Place: Nat. Institute of Environmental Health Sciences, Building 101, Main Conference Room, South Campus, Research Triangle Park, NC 27709.

Contact Person: Linda K. Bass, PhD, Scientific Review Administrator, Nat'l Institute of Environmental Health Sciences, P.O. Box 12233, MD EC–24, Research Triangle Park, NC 27709, (919) 541–1307.

(Catalogue of Federal Domestic Assistance Program Nos. 93.113, Biological Response to Environmental Health Hazards; 93.114, Applied Toxicological Research and Testing; 93.115, Biometry and Risk Estimation—Health Risks from Environmental Exposures; 93.142, NIEHS Hazardous Waste Worker Health and Safety Training; 93.143, NIEHS Superfund Hazardous Substances—Basic Research and Education; 93.894, Resources and Manpower Development in the Environmental Health Sciences, National Institutes of Health, HHS)

Dated: September 29, 1999.

Nancy Middendorf,

Acting Director, Office of Federal Advisory Committee Policy.

[FR Doc. 99–25948 Filed 10–5–99; 8:45 am]

BILLING CODE 4140–01–M

DEPARTMENT OF HEALTH AND HUMAN SERVICES

National Institutes of Health

National Institutes of Environmental health Sciences; Notice of Closed Meeting

Pursuant to section 10(a) of the Federal Advisory Committee Act, as amended (5 U.S.C. Appendix 2), notice is hereby given of the following meeting.

The meeting will be closed to the public in accordance with the provisions set forth in sections 552b(c)(4) and 552b(c)(6), Title 5 U.S.C. as amended. The grant applications and the discussions could disclose confidential trade secrets or commercial property such as patentable material, and personal information concerning individuals associated with the grant applications, the disclosure of which would constitute a clearly unwarranted invasion of personal privacy

Name of Committee: National Institute of Environmental Health Science Special Emphasis Panel, K24 Grants Review.

Date: December 3, 1999.

Time: 10 a.m. to 3 p.m.

Agenda: To review and evaluate grant applications.

Place: NIEHS, 79 T. W. Alexander Drive, Building 4401, Conference Room 3446, Research Triagle Park, NC 27709, (Telephone Conference Call).

Contact Person: Linda K. Bass, PhD, Scientific Review Administrator, NIEHS, PO

Box 12233 EC–24, Research Triangle Park, NC 27709, (919) 541–1307.

(Catalogue of Federal Domestic Assistance Program Nos. 93.113, Biological Response to Environmental Health Hazards; 93.114, Applied Toxicological Research and Testing; 93.115, Biometry and Risk Estimation—Health Risks from Environmental Exposure; 93.142, NIEHS Hazardous Waste Worker Health and Safety Training; 93.143, NIEHS Superfund Hazardous Substances—Basic Research and Education; 93.894, Resources and Manpower Development in the Environmental Health Science, National Institutes of Health, HHS)

Dated September 29, 1999.

Nancy Middendorf,

Acting Director, Office of Federal Advisory Committee Policy.

[FR Doc. 99–25949 Filed 10–5–99; 8:45 am]

BILLING CODE 4140–01–M

DEPARTMENT OF HEALTH AND HUMAN SERVICES

National Institutes of Health

National Institute on Aging; Notice of Closed Meeting

Pursuant to section 10(d) of the Federal Advisory Committee Act, as amended (5 U.S.C. Appendix 2), notice is hereby given of the following meeting.

The meeting will be closed to the public in accordance with the provisions set forth in sections 552b(c)(4) and 552b(c)(6), Title 5 U.S.C., as amended. The grant applications and the discussions could disclose confidential trade secrets or commercial property such as patentable material, and personal information concerning individuals associated with the grant applications, the disclosure of which would constitute a clearly unwarranted invasion of personal privacy.

Name of Committee: National Institute on Aging Special Emphasis Panel, Regulation of Ca2+ channel Gene Expression in Aging.

Date: October 18, 1999.

Time: 1 p.m. to 5 p.m.

Agenda: To review and evaluate grant applications.

Place: Gateway Building, 7201 Wisconsin Ave. Suite 2C212, Bethesda, MD 20814, (Telephone Conference Call).

Contact Person: Louise L. Hsu, PhD, The Bethesda Gateway Building, 7201 Wisconsin Avenue/Suite 2C212, (301) 496–9666.

(Catalogue of Federal Domestic Assistance Program Nos. 93.866, Aging Research, National Institutes of Health, HHS)

Dated: September 29, 1999.

Nancy Middendorf,

Acting Director, Office of Federal Advisory Committee Policy.

[FR Doc. 99–25951 Filed 10–5–99; 8:45 am]

BILLING CODE 4140–01–M

DEPARTMENT OF HEALTH AND HUMAN SERVICES

National Institutes of Health

National Institute of Allergy and Infectious Diseases; Notice of Closed Meeting

Pursuant to section 10(d) of the Federal Advisory Committee Act, as amended (5 U.S.C. Appendix 2), notice is hereby given of the following meeting.

The meeting will be closed to the public in accordance with the provisions set forth in sections 552b(c)(4) and 552b(c)(6), Title 5 U.S.C., as amended. The contract proposals and the discussions could disclose confidential trade secrets or commercial property such as patentable material, and personal information concerning individuals associated with the contract proposals, the disclosure of which would constitute a clearly unwarranted invasion of personal privacy.

Name of Committee: National Institute of Allergy and Infectious Diseases Special Emphasis Panel, Clinical and Regulatory Affairs Support Contract.

Date: October 12, 1999.

Time: 1 p.m. to 6 p.m.

Agenda: To review and evaluate contract proposals.

Place: NIAID, NIH (Room 1202), 6700–B Rockledge Drive, MSC 7610, Bethesda, MD 20892–7610.

Contact Person: Ken Wasserman, PhD, Scientific Review Administrator, Scientific Review Program, Division of Extramural Activities, NIAID, NIH, Room 2217, 6700–B Rockledge Drive, MSC 7610, Bethesda, MD, 301 496–2550, kw159p@nih.gov.

This notice is being published less than 15 days prior to the meeting due to the timing limitations imposed by the review and funding cycle.

(Catalogue of Federal Domestic Assistance Program Nos. 93.855, Allergy, Immunology, and Transplantation Research: 93.856, Microbiology and Infectious Diseases Research, National Institutes of Health, HHS)

Dated: September 29, 1999.

Nancy Middendorf,

Acting Director, Office of Federal Advisory Committee Policy, NIH.

[FR Doc. 99–25953 Filed 10–5–99; 8:45 am]

BILLING CODE 4140–01–M

DEPARTMENT OF HEALTH AND HUMAN SERVICES

National Institutes of Health

Center for Scientific Review; Notice of Closed Meetings

Pursuant to section 10(d) of the Federal Advisory Committee Act, as amended (5 U.S.C. Appendix 2), notice is hereby given of the following meetings.

The meetings will be closed to the pubic in accordance with the provisions set forth in sections 552(b)(c)(4) and 552b(c)(6), Title 5 U.S.C., as amended. The grant applications and the discussions could disclosed confidential trade secrets or commercial property such as patentable material, and personal information concerning individuals associated with the grant applications, the disclosure of which would constitute a clearly unwarranted invasion of personal privacy.

Name of Committee: Pathophysiological Sciences Initial Review Group, Lung Biology and Pathology Study Section.

Date: October 13–14, 1999.

Time: 8 a.m. to 5 p.m.

Agenda: To review and evaluate grant applications.

Place: St James Preferred Residence, 950 24th Street, NW, Washington, DC 20037.

Contact Person: George M. Barnas, PhD, Scientific Review Administrator, Center for Scientific Review, National Institutes of Health, 6701 Rockledge Drive, Room 2182, MSC 7818, Bethesda, MD 20892, (301) 435–0696.

Name of Committee: Center for Scientific Review Special Emphasis Panel.

Date: October 13, 1999.

Time: 3 p.m. to 5 p.m.

Agenda: To review and evaluate grant applications.

Place: NIH, Rockledge 2, Bethesda, MD 20892, (Telephone Conference call).

Contact Person: Paul K. Strudler, Phd, Scientific Review Administration, Center for Scientific Review, National Institutes of Health, 6701 Rockledge Drive, Room 4100, MSC 7804, Bethesda, MD 20892, (301) 435–1716.

Name of Committee: Center for Scientific Review Special Emphasis Panel.

Date: October 14, 1999.

Time: 8 a.m. to 4 p.m.

Agenda: To review and evaluate grant applications.

Place: St James Preferred Residence, 950 24th Street, NW, Washington, DC 20037.

Contact Person: Russell T. Dowell, Phd, Scientific Review Administrator, Center for Scientific Review, National Institutes of Health, 6701 Rockledge Drive, Room 41118, MSC 7818, Bethesda, MD 20892, (301) 435–1169, dowellr@drg.nih.gov.

Name of Committee: Biochemical Sciences Initial Review Group, Pathobiochemistry study Section.

Date: October 14–15, 1999.

Time: 8:30 a.m. to 1 p.m.

Agenda: To review and evaluate grant applications.

Place: Holiday Inn Chevy Chase, 5520 Wisconsin Avenue, Chevy Chase, MD 20815.

Contact Person: Zakir Bengali, Phd, Scientific Review Administrator, Center for Scientific Review, National Institutes of Health, 6701 Rockledge Drive, Room 5150, MSC 7842, Bethesda, MD 20892, (301) 435–1742.

Name of Committee: Center for Scientific Review Special Emphasis Panel.
Date: October 17, 1999.
Time: 4 p.m. to 6:30 p.m.
Agenda: To review and evaluate grant applications.
Place: Holiday Inn Georgetown, 2101 Wisconsin Avenue, N.W., Washington, DC 20007.
Contact Person: Dharam S. Dhindsa, DVM, PhD, Scientific Review Administrator, Center for Scientific Review, National Institutes of Health, 6701 Rockledge Drive, Room 5126, MSC 7854, Bethesda, MD 20892, (301) 435–1174, dhindsadacsr.nih.gov.

Name of Committee: Center for Scientific Review Special Emphasis Panel.
Date: October 18, 1999.
Time: 7:15 a.m. to 8 a.m.
Agenda: To review and evaluate grant applications.
Place: Chevy Chase Holiday Inn, 5520 Wisconsin Ave., Chevy Chase, MD 20815.
Contact Person: Eileen W. Bradley, DSC, Scientific Review Administrator, Center for Scientific Review, National Institutes of Health, 6701 Rockledge Drive, Room 5120, MSC 7854, Bethesda, MD 20892, (301) 435–1179.

Name of Committee: Center for Scientific Review Special Emphasis Panel.
Date: October 18–19, 1999.
Time: 8 a.m. to 5 p.m.
Agenda: To review and evaluate grant applications.
Place: One Washington Circle, 1 Washington Circle, NW, Washington, DC 20037.
Contact Person: Michael A. Lang, PhD, Scientific Review Administrator, Center for Scientific Review, National Institutes of Health, 6701 Rockledge Drive, Room 5210, MSC 7850, Bethesda, MD 20892, (301) 435–1265.

Name of Committee: Endocrinology and Reproductive Sciences Initial Review Group, Reproductive Biology Study Section.
Date: October 18–19, 1999.
Time: 8 a.m. to 3 p.m.
Agenda: To review and evaluate grant applications.
Place: Hotel Washington, 515 15th Street, NW, Washington, DC 20004.
Contact Person: Dennis Leszczynski, PhD, Scientific Review Administrator, Center for Scientific Review, National Institutes of Health, 6701 Rockledge Drive, Room 6170, MSC 7892, Bethesda, MD 20892, (301) 435–1044.

Name of Committee: Endocrinology and Reproductive Sciences Initial Review Group, Biochemical Endocrinology Study Section.
Date: October 18–19, 1999.
Time: 8 a.m. to 11 a.m.
Agenda: To review and evaluate grant applications.
Place: Embassy Suites, Chevy Chase Pavillion, 4300 Military Rd., Wisconsin at Western Ave., Washington, DC 20015.
Contact Person: Michael Knecht, PhD, Scientific Review Administrator, Center for Scientific Review, National Institutes of Health, 6701 Rockledge Drive, Room 6176, MSC 7892, Bethesda, MD 20892, (301) 435–1046.

Name of Committee: Health Promotion and Disease Prevention Initial Review Group, Epidemiology and Disease Control Subcommittee 2.
Date: October 18–19, 1999.
Time: 8 a.m. to 5 p.m.
Agenda: To review and evaluate grant applications.
Place: Holiday Inn Old Town Alexandria, 480 King Street, Alexandria, VA 22314.
Contact Person: David M. Monsees, PhD, Scientific Review Administrator, Center for Scientific Review, National Institutes of Health, 6701 Rockledge Drive, Room 3150, MSC 7848, Bethesda, MD 20892, (301) 435–0684, monseesdadrg.nih.gov.

Name of Committee: Center for Scientific Review Special Emphasis Panel.
Date: October 18, 1999.
Time: 8 a.m. to 5 p.m.
Agenda: To review and evaluate grant applications.
Place: The Governor's House Hotel, 1615 Rhode Island Avenue, NW., Washington, DC 20036.
Contact Person: Joseph Kimm, PhD, Scientific Review Administrator, Center for Scientific Review, National Institutes of Health, 6701 Rockledge Drive, Room 5178 MSC 7844, Bethesda, MD 20892, (301) 435–1249.

Name of Committee: Center for Scientific Review Special Emphasis Panel.
Date: October 18–19, 1999.
Time: 8 a.m. to 5 p.m.
Agenda: To review and evaluate grant applications.
Place: Double Tree Hotel, 1750 Rockville Pike, Rockville, MD 20852.
Contact Person: Eugene Vigil, PhD, Scientific Review Administrator, Center for Scientific Review, National Institutes of Health, 6701 Rockledge Drive, Room 5144, MSC 7840, Bethesda, MD 20892, (301) 435–1025.

Name of Committee: Cardiovascular Sciences Initial Review Group, Experimental Cardiovascular Sciences Study Section.
Date: October 18–19, 1999.
Time: 8 a.m. to 5 p.m.
Agenda: To review and evaluate grant applications.
Place: Latham Hotel Georgetown, 3000 M Street, NW, Washington, DC 20007.
Contact Person: Anshumali Chaudhari, PhD, Scientific Review Administrator, Center for Scientific Review, National Institutes of Health, 6701 Rockledge Drive, Room 4128, MSC 7802, Bethesda, MD 20892, (301) 435–1210.

Name of Committee: Nutritional and Metabolic Sciences Initial Review Group, Nutrition Study Section.
Date: October 18–19, 1999.
Time: 8 a.m. to 4 p.m.
Agenda: To review and evaluate grant applications.
Place: Embassy Suites, Chevy Chase Pavilion, 4300 Military Rd., Wisconsin at Western Ave., Washington, DC 20015.
Contact Person: Sooja K. Kim, PhD, RD, Scientific Review Administrator, Center for Scientific Review, National Institutes of Health, 6701 Rockledge Drive, Room 6158, MSC 7892, Bethesda, MD 20892, (301) 435–1780.

Name of Committee: Musculoskeletal and Dental Sciences Initial Review Group, General Medicine A Subcommittee 1.
Date: October 18–19, 1999.
Time: 8 a.m. to 4 p.m.
Agenda: To review and evaluate grant applications.
Place: Summerfield Suites Hotel, 200 Skidmore Blvd., Gaitherburg, MD 20877.
Contact Person: Harold M. Davidson, PhD, Scientific Review Administrator, Center for Scientific Review, National Institutes of Health, 6701 Rockledge Drive, Room 4216, MSC 7814, Bethesda, MD 20892, (301) 435–1776, davidsoh@csr.nih.gov.

Name of Committee: Center for Scientific Review Special Emphasis Panel.
Date: October 18–19, 1999.
Time: 8 a.m. to 5 p.m.
Agenda: To review and evaluate grant applications.
Place: Holiday Inn, 5520 Wisconsin Ave, Chevy Chase, MD 20815.
Contact Person: Cheri Wiggs, PhD, Scientific Review Administrator, Center for Scientific Review, National Institutes of Health, 6701 Rockledge Drive, Room 3180, MSC 7848, Bethesda, MD 20892, (301) 435–8367.

Name of Committee: Infectious Diseases and Microbiology Initial Review Group, Experimental Virology Study Section.
Date: October 18–19, 1999.
Time: 8:30 a.m. to 5 p.m.
Agenda: To review and evaluate grant applications.
Place: Holiday Inn Hotel & Suites, 625 First Street, Alexandria, VA 22314.
Contact Person: Garrett V. Keefer, PhD, Scientific Review Administrator, Center for Scientific Review, National Institutes of Health, 6701 Rockledge Drive, Room 4190, MSC 7808, Bethesda, MD 20892, (301) 435–1152.

Name of Committee: Genetic Sciences Initial Review Group, Mammalian Genetics Study Section.
Date: October 18–19, 1999.
Time: 9 a.m. to 4 p.m.
Agenda: To review and evaluate grant applications.
Place: Hotel Durant, 2600 Durant Avenue, Berkeley, CA 94704.
Contact Person: Camilla Day, PhD, Scientific Review Administrator, Center for Scientific Review, National Institutes of Health, 6701 Rockledge Drive, Room 2208, MSC 7890, Bethesda, MD 20892, (301) 435–1037, dayc@drg.nih.gov.

Name of Committee: Pathophysiological Sciences Initial Review Group, General Medicine A Subcommittee 2.
Date: October 18–19, 1999.
Time: 9 a.m. to 6 p.m.
Agenda: To review and evaluate grant applications.
Place: Tempe Mission Palms, 60 East Fifth Street, Tempe, AZ 85281.
Contact Person: Mushtaq A. Khan, DVM, PhD, Scientific Review Administrator, Center for Scientific Review, National Institutes of Health, 6701 Rockledge Drive, Suite 2191, MSC 7818, Bethesda, MD 20892, (301) 435–1778, khanm@csr.nih.gov.

Name of Committee: Center for Scientific Review Special Emphasis Panel.

Date: October 18, 1999.

Time: 10 a.m. to 12:30 p.m.

Agenda: To review and evaluate grant applications.

Place: NIH, Rockledge 2, Bethesda, MD 20892, (Telephone Conference Call).

Contact Person: Daniel R. Kenshalo, PhD, Scientific Review Administrator, Integrative, Functional & Cognitive Neuroscience & Cognitive Neuroscience Study Section 4, Center for Scientific Review, National Institutes of Health, 6701 Rockledge Drive, Room 5176, MSC 7844, Bethesda, MD 20892, (301) 435–1255.

Name of Committee: Surgery, Radiology and Bioengineering Initial Review Group, Surgery, Anesthesiology and Trauma Study Section.

Date: October 18–19, 1999.

Time: 1 p.m. to 5 p.m.

Agenda: To review and evaluate grant applications.

Place: Georgetown Holiday Inn, 2101 Wisconsin Avenue, NW, Washington, DC 20007.

Contact Person: Gerald L. Becker, MD, Scientific Review Administrator, Center for Scientific Review, National Institutes of Health, 6701 Rockledge Drive, Room 5114, MSC 7854, Bethesda, MD 20892, (301) 435–1170.

(Catalogue of Federal Domestic Assistance Program Nos. 93.306, Comparative Medicine, 93.306; 93.333, Clinical Research 93.333, 93.337, 93.393–93.396, 93.837–93.844, 93.846–93.878, 93.892, 93.893, National Institutes of Health, HHS)

Dated: September 24, 1999.

LaVerne Y. Stringfield,

Director, Office of Federal Advisory Committee Policy.

[FR Doc. 99–25955 Filed 10–5–99; 8:45 am]

BILLING CODE 4140–01–M

DEPARTMENT OF HEALTH AND HUMAN SERVICES

Public Health Service

Re-scheduled Meeting on Report on Carcinogens (RoC)

National Toxicology Program Public Meeting to receive comment on the review procedures and listing criteria used in the preparation of the DHHS Report on Carcinogens (RoC); is re-scheduled from September 15 to October 21 and 22, 1999, DoubleTree Hotel Rockville, 1750 Rockville Pike, Rockville, Maryland, beginning at 9 am.

Due to weather conditions posed by Hurricane Floyd, the National Toxicology Program has re-scheduled a public meeting for the purpose of receiving comment on the procedures for reviewing nominations for listing in or delisting from the RoC and the current listing criteria used for evaluation of the nominations to the RoC. The purpose of this public meeting is to obtain input and to provide all interested parties an opportunity to express their views about the review process and/or the evaluation criteria and to comment on the views expressed by others. The purpose of the meeting is not to discuss the evidence for listing or delisting specific substances that are currently in the RoC or proposed for listing or delisting in the 9th or 10th RoC. However, it may be appropriate to use examples from the review of a specific substance to illustrate issues regarding the process.

The meeting will begin at 9 am each day, with on-site registration at 8:30 am on October 21. The meeting will conclude at 5 pm on October 21 and at 5 p.m. October 22 or the conclusion of the public comment and discussion, if sooner. Details regarding registration follow. Attendance at the meeting is limited only by the space available.

Background

The DHHS Report on Carcinogens (RoC) is a public information document prepared for the US Congress by the National Toxicology Program in response to Section 301(b)(4) of the Public Health Service Act, as amended. The intent of the document is to provide a listing of those agents, substances or exposure circumstances which are either ''known'' or ''reasonably anticipated'' to cause cancer in humans, and to which a significant number of people in the United States are exposed. The first edition of the report (then known as the Annual Report on Carcinogens) was published in 1980, and similar criteria and review processes were used to consider nominated substances for listing through preparation of the 7th edition published in 1994. In 1994 Dr. Ken Olden, Director of NTP and NIEHS established an ad hoc working group of the NTP Board of Scientific Counselors and charged them to review and make recommendations on two issues: the adequacy of the existing criteria and the incorporation of mechanistic data as part of the criteria for listing substances in future Reports. In addition Dr. Olden directed that the process used to review nominations for listing in or delisting from the Report be revised to allow more public input throughout the process and to add external review to broaden the scope of scientific review. As a consequence, in 1994 and 1995 the criteria were examined by a panel whose membership included academia, industry, labor, public/environmental organizations, state and local health departments and government who met in public session in public meetings. Recommendations were made for revising the listing criteria and the nomination review process which were approved by the Secretary, HHS on September 13, 1996 [**Federal Register**: September 26, 1996, Volume 61, Number 188, Page 50499–50500]. The substances newly included in the 8th edition of the Report on Carcinogens (1998) and the nominations for listing in or delisting from the 9th edition were evaluated using these revised review process and criteria.

Public Review and Comment Encouraged

NTP staff will briefly summarize the process and the listing criteria from approximately 9:00 am to 10 am. The remainder of the time will be devoted to public comments by all interested parties and discussion of issues raised. Dr. Bernard Goldstein, Director of the Environmental and Occupational Health Sciences Institute of Rutgers and the University of Medicine and Dentistry of New Jersey, will serve as chair and moderator for the day. Dr. Goldstein, with the assistance of NTP Board of Scientific Counselors members, will identify issues raised by speakers and lead discussion sessions on the issues throughout the meeting.

The NTP welcomes the continued and meaningful input from all stakeholders in reviewing the RoC process and the listing criteria as we move forward to the 10th edition of the RoC. The experience and perspectives of all stakeholders are critical to ongoing evaluations of nominations to the RoC.

Oral comments: Speakers will be registered and assigned time on a first-come, first-served basis. Fifty-two speakers were registered for the previously scheduled, September 15, meeting, and the order of these presentations will remain the same. The meeting has been extended for a second day to ensure time for discussion and dialogue and to accommodate any additional speakers. The time allotted for each presentation will be dependent upon the total number of individuals who register to speak; we anticipate that adding a second day to the meeting will permit 10 minutes for each presenter. Each speaker will be asked to identify their supporting organization (if any). When oral comments are read from printed copy, it is requested that 10 copies of the text be provided when registering at the meeting to be distributed to the Chair and NTP Board members and to supplement the record of the meeting.

Written comments are welcome and can be sent to the address given below. All comments previously submitted for the September 15 meeting will be considered. Written comments must

include name, affiliation, mailing address, phone, fax, e-mail, and sponsoring organization (if any).

RoC Listing/Delisting Procedures and Listing Criteria

Revised criteria were announced first in the **Federal Register** and other publications in 1996 [**Federal Register**: September 26, 1996, Volume 61, Number 188, Page 50499–50500] and clarified in the FR and other publications in April 1999 (FR Vol. 64, No. 63 pp 15983–15984 and Vol. 64, No. 74; pp 19188–19189). The procedures and criteria can be found on the NTP website located at *www.ntp-server.niehs.nih.gov*

Registration for Meeting

Pre-registration to attend this meeting can be made by notifying Ms. Angie Wilson by mail at NIEHS, Building 101, Room A328, P.O. Box 12233, Research Triangle Park NC 27709, by phone at (919) 541–3971, by FAX at (919) 541–0295, or by e-mail at *wilson9@niehs.nih.gov*. Please indicate if you wish to make an oral presentation. Those pre-registered for the September 15 meeting are asked to re-confirm their participation for October 21–22. On site registration will be available the morning of October 21, 1999 from 8:30 am to 9:00 am. If possible, those wishing to speak should provide a written copy of their statement or talking points before the October 21 meeting, to assist the Chair and Board Members in identifying issues for discussion and to supplement the record of the meeting. Those registering on site are requested to bring 10 copies of their statement or talking points. Written statements should supplement and may expand on the oral presentation, or may be submitted in lieu of an oral presentation. When registering to comment, please provide your name, affiliation, mailing address, phone, fax, e-mail, and sponsoring organization (if any).

Report on Carcinogens; Listing/Delisting Procedures

Petitions for listing or delisting an agent, substance, mixture, or exposure circumstance in the Report on Carcinogens (RoC) should be submitted to the National Toxicology Program (NTP).[1] Petitions must contain a rationale for listing or delisting as either a ''known human carcinogen'' or a ''reasonably anticipated human carcinogen.'' Appropriate background information and relevant data (e.g. journal articles, NTP Technical Reports, IARC listings, exposure surveys, release inventories, etc.) which support a petition should be provided or referenced.

An agent, substance, mixture, or exposure circumstance petitioned for listing or delisting will be announced in the **Federal Register**, trade journals, and NTP publications to solicit public comment. The original petition and all comments received will be evaluated by a National Institute of Environmental Health Sciences (NIEHS/NTP) Report on Carcinogens Review Committee (RG1), composed of scientists from the NIEHS/NTP, to determine if the information provided is sufficient to merit further consideration. If it is determined the petition warrants formal consideration, the NTP may initiate an independent search of the literature and prepare a draft review document for the substance under consideration. Draft documents will be prepared according to the following general format:

1.0 Introduction
- 1.1 Chemical Information—synonyms, trade names, CAS #'s, molecular formula, molecular structure, etc.
- 1.2 Physical-Chemical Properties
- 1.3 Identification of Structural Analogs
- 2.0 Exposure Assessment
- 2.1 Production
- 2.2 Use
- 2.3 Environmental Exposure—environmental occurrence, environmental release, drinking water and food content, consumer products, occupational exposures, biomarkers of exposure
- 2.4 Regulations—Occupational Exposure Limits (standards and criteria), ''other'' standards and criteria

3.0 Human Studies
- 3.1 Epidemiology Studies—occupational studies, clinical trials, consumer exposure, other ''non-occupational'' exposures
- 3.2 Laboratory Studies—controlled exposures
- 3.3 Poisonings—case reports, accidents, symptoms and clinical signs

4.0 Animal Carcinogenicity Studies—subdivided by species

5.0 Genotoxicity

6.0 Mechanistic and Other Relevant Studies

Data used in the preparation of Sections 3 through 6 of the draft document must come from publicly available, peer reviewed sources.

If it is determined that the petition contains insufficient information to warrant consideration by the NTP, it will be returned to the original petitioner who will be invited to resubmit the petition with additional justification, which may include new data, exposure information, etc. A notice, stating the action taken for a petitioned substance found to contain insufficient justification for consideration, will be published in the **Federal Register**, trade journals, and NTP publications, and included in subsequent editions of the RoC with the reason(s) why it was not considered further. This decision will also be forwarded to the NTP Executive Committee and Board of Scientific Counselors.

Formal Review Steps

The following describes the review process for petitions that are considered by the NTP for listing in or delisting from the Report on Carcinogens.

NIEHS/NTP Review Committee for the Report on Carcinogens (RG1)

The original petition and all public comments received in response to a petition will be reviewed by RG1. Assignment of a primary and secondary reviewer will be made upon receipt of a petition. Reviewers will lead discussions concerning the adequacy of the petition. If the petition warrants formal consideration, a search of pertinent databases will be performed and available citations will be reviewed by the primary reviewer. The primary reviewer will identify the relevant articles. After consultation with the secondary reviewer, the identified literature will be obtained and a draft summary of all available information from the original petition and the literature search will be prepared. The primary and secondary reviewers will examine the petition, the literature citations, and the draft document for completeness and adequacy. The draft document will be revised if necessary and presented by the primary reviewer to the RG1. Public comments received in response to announcements of petitions will also be considered. The RG1 will make a formal recommendation for those petitions determined to contain sufficient information for listing or delisting in the RoC. The petition then continues through the review process.

Petitions reviewed by RG1 for which sufficient information could *not* be obtained will not proceed further. The other RoC review groups, as well as the

[1] National Toxicology Program, Report on Carcinogens, P.O. Box 12233, 79 Alexander Drive, Bldg. 4401, Room 3127, MD–EC–14, Research Triangle Park, NC 27709

For information contact: Dr. C.W. Jameson, phone: (919) 541–4096, fax: (919) 541–2242, email:jameson@niehs.nih.gov

NTP Executive Committee, will be informed of this action. The original petitioner will be notified of the RG1 action and invited to resubmit the petition with additional justification. All petitioned agents, substances, or mixtures reviewed by RG1 but not selected for listing or delisting will be included in the subsequent edition of the RoC with the reason(s) why they were not considered further.

NTP Executive Committee's Interagency Working Group for the Report on Carcinogens (RG2)

The second review phase of petitions will be done by the NTP Executive Committee's Interagency Working Group for the Report on Carcinogens (RG2). RG2 is a Governmental interagency group that assesses whether relevant information on the petitioned agent, substance, or mixture is available and sufficient for listing in or delisting from the RoC. A reviewer for each petition will be assigned from the RG2 who will be responsible for reviewing the draft document and for leading the Working Group's discussion of the petition. Public comments received in response to announcements of petitions will also be considered by RG2 during the review. Upon completion of its review, RG2 will provide comments and recommendations for any changes and/or additions to the draft document and also make its recommendation for listing or delisting. The petition then continues through the review process.

Board of Scientific Counselors RoC Subcommittee (External Peer Review)

The third review phase for petitions will be performed by a subcommittee of the NTP Board of Scientific Counselors. This subcommittee serves as another independent peer review group that assesses whether the relevant information available is sufficient for listing in or delisting. The NTP Board RoC Subcommittee will review petitions in a public meeting. Prior to public review, a notice will be published in the **Federal Register**, trade journals, and NTP publications, soliciting public comment. The notice will also invite interested groups or individuals to submit written comments and/or to address the NTP Board RoC Subcommittee during the review meeting. Reviewers for each petition will be assigned from the NTP Board RoC Subcommittee who will be responsible for reviewing the draft document and leading the subcommittee's discussion of the petition. Upon completion of its review, NTP Board RoC Subcommittee will provide comments and recommendations for any changes and/or additions to the draft document and also make its formal recommendation for listing or delisting the petitioned agent, substance, or mixture.

Upon completion of the reviews by RG1, RG2, and NTP Board RoC Subcommittee, those petitioned agents, substances, mixtures, or exposure circumstance which are recommended for listing in or delisting from the RoC, will be published in the **Federal Register**, trade journals, and NTP publications, and public comment and input on the recommendations will be solicited.

NTP Executive Committee

The independent recommendations of RG1, RG2, and NTP Board RoC Subcommittee and all public comment will be presented to the NTP Executive Committee [2] for review and comment.

NTP Director

The Director, NTP receives the four independent recommendations from RG1, RG2, NTP Board RoC Subcommittee, and the NTP Executive Committee and makes the final decision regarding the proposed listing and/or delisting and submits the RoC to the Office of the Secretary, DHHS. Upon review and approval by the Secretary, DHHS and submission to Congress, a notice of the RoC publication, indicating all newly listed or delisted agents, substances, mixtures, or exposure circumstance will be published in the **Federal Register**, trade journals, and NTP publications.

Report on Carcinogens; Criteria for Listing Agents, Substances or Mixtures

1. Known To Be Human Carcinogens

There is sufficient evidence of carcinogenicity from studies in humans which indicates a causal relationship between exposure to the agent, substance or mixture and human cancer.

2. Reasonably Anticipated To Be Human Carcinogens

There is limited evidence of carcinogenicity from studies in humans which indicates that causal interpretation is credible but that alternative explanations such as chance, bias or confounding factors could not adequately be excluded; *or*

There is sufficient evidence of carcinogenicity from studies in experimental animals which indicates there is an increased incidence of malignant and/or a combination of malignant and benign tumors: (1) In multiple species, or at multiple tissue sites, or (2) by multiple routes of exposure, or (3) to an unusual degree with regard to incidence, site or type of tumor or age at onset; *or*

There is less than sufficient evidence of carcinogenicity in humans or laboratory animals, however; the agent, substance or mixture belongs to a well defined, structurally-related class of substances whose members are listed in a previous Report on Carcinogens as either a known to be human carcinogen, or reasonably anticipated to be human carcinogen or there is convincing relevant information that the agent acts through mechanisms indicating it would likely cause cancer in humans.

Conclusions regarding carcinogenicity in humans or experimental animals are based on scientific judgment, with consideration given to all relevant information. Relevant information includes, but is not limited to dose response, route of exposure, chemical structure, metabolism, pharmacokinetics, sensitive sub populations, genetic effects, or other data relating to mechanism of action or factors that may be unique to a given substance. For example, there may be substances for which there is evidence of carcinogenicity in laboratory animals but there are compelling data indicating that the agent acts through mechanisms which do not operate in humans and would therefore not reasonably be anticipated to cause cancer in humans.

Dated: September 29, 1999.

Kenneth Olden,

Director, National Toxicology Program.

[FR Doc. 99–25940 Filed 10–5–99; 8:45 am]

BILLING CODE 4140–01–P

[2] Agencies represented on the NTP Executive Committee include: Agency for Toxic Substances and Disease Registry (ATSDR), Consumer Product Safety Commission (CPSC), Environmental Protection Agency (EPA), Food and Drug Administration (FDA), National Center for Toxicological Research (NCTR), National Institute for Occupational Safety and Health (NIOSH), Occupational Safety and Health Administration (OSHA), Department of Health and Human Services (DHHS), National Institutes of Health (NIH), National Cancer Institute (NCI), National Library of Medicine (NLM), and National Institute of Environmental Health Sciences/NTP (NIEHS/NTP).

DEPARTMENT OF HEALTH AND HUMAN SERVICES

Substance Abuse and Mental Health Services Administration

Agency Information Collection Activities: Proposed Collection; Comment Request

In compliance with section 3506(c)(2)(A) of the Paperwork Reduction Act of 1995 concerning opportunity for public comment on

proposed collections of information, the Substance Abuse and Mental Health Service Administration will publish periodic summaries of proposed projects. To request more information on the proposed projects or to obtain a copy of the information collection plans, call the SAMHSA Reports Clearance Officer on (301) 443–7978.

Comments are invited on: (a) Whether the proposed collections of information are necessary for the proper performance of the functions of the agency, including whether the information shall have practical utility; (b) the accuracy of the agency's estimate of the burden of the proposed collection of information; (c) ways to enhance the quality, utility, and clarity of the information to be collected; and (d) ways to minimize the burden of the collection of information on respondents, including through the use of automated collection techniques or other forms of information technology.

Proposed Project

State Incentive Grant (SIG) Cross-Site Evaluation—SAMHSA's Center for Substance Abuse prevention (CSAP) is charged with evaluating the State Incentive Cooperative Agreements for Community-Based Action, or State Incentive Grant (SIG) Program. States receiving SIG funds are: (1) To coordinate, leverage and/or redirect, as appropriate, all substance abuse prevention resources within the State that are directed at communities, families, schools, and workplaces, and (2) to develop a revitalized, comprehensive State-wide prevention strategy aimed at reducing drug use by youth. The ultimate aim of the SIG Program is to prevent substance abuse among youths ages 12 to 17. The District of Columbia and the 20 States that have received SIG grants thus far are required to implement at the community level a range of substance abuse, community-based prevention efforts, at least half of which are derived from sound scientific research findings. CSAP awarded about $3 million per year for three years to each of five States in FY 1997, to each of fourteen States in FY 1998, and to one State and the District of Columbia in FY 1999.

CSAP is planning a national, cross-site evaluation of the SIG Program, consisting of a process and an outcome evaluation. The outcome evaluation will address two questions: (1) ''Has the SIG Program had an impact on youth substance abuse?,'' and (2) ''How do SIG States differ in their impact on youth substance abuse?'' These questions will be addressed by using data already being collected by SAMHSA's National Household Survey of Drug Abuse (NHSDA). The process evaluation will focus on three questions: (1) ''Did States attain the SIG Program's two main goals of coordinated funding streams and revitalized comprehensive prevention strategies and how were these goals attained?,'' (2) ''What other substance abuse prevention programming has the State implemented?,'' and (3) ''Did SIGs meet the criterion of supporting science-based programs fifty percent of the time, and what array of prevention activities were supported?''

In addition to the NHSDA data, three instruments are needed to collect process information about SIG activities at the State, community, and program levels: (1) A State Case Study Protocol; (2) a Comparison State Protocol and (3) a Program Intervention Protocol. The State Case Study Protocol will collect data on the following topics at the State level: contextual conditions, SIG mobilization, system characteristics and dynamics, collaborative strategies or activities, immediate outcomes, systems change, sub-recipient characteristics and dynamics, sub-recipient planning and science-based prevention interventions, sub-recipient immediate local outcomes, long-term outcomes, possible rival explanations, and learned lessons. The State Case Study Protocol also will provide data for one of the two Government Performance and Results Act (GPRA) measures for the SIG program. The Comparison State Protocol will collect data from non-SIG States to identify any SIG-like interventions and to record State-level contextual conditions and the characteristics of prevention systems. The Program Intervention Protocol will collect data at the subrecipient and program levels on the following topics: contextual conditions, program or action definition, and immediate and intermediate outcomes.

The State Case Study Protocol will be used once for every State-level SIG award. The Comparison State Protocol will be administered once to all States and U.S. territories not participating in the SIG Program. The Program Intervention Protocol will be used for a sample of sub-recipient communities and programs in the SIG States.

Estimated annual burden is as follows:

Instrument	Number of respondents	Responses per respondent	Hours per response	Annual burden
State Case Study Protocol	56	1	2	112
Comparison State Protocol	25	1	2	50
Program Intervention Protocol	240	1	1	240
Total	321	.....	.....	402

Send comments to Nancy Pearce, SAMHSA Reports Clearance Officer, Room 16–105, Parklawn Building, 5600 Fishers Lane, Rockville, MD 20857. Written comments should be received within 60 days of this notice.

Dated: September 29, 1999.

Richard Kopanda,

Executive Officer, Substance Abuse and Mental Health Services Administration.

[FR Doc. 99–25962 Filed 10–5–99; 8:45 am]

BILLING CODE 4162–20–M

DEPARTMENT OF HOUSING AND URBAN DEVELOPMENT

[Docket No. FR–4410–FA–07]

Announcement of Funding Awards for Fiscal Year 1999 Community Outreach Partnership Centers

AGENCY: Office of the Assistant Secretary for Policy Development and Research, HUD.

ACTION: Announcement of funding awards.

SUMMARY: In accordance with section 102(a)(4)(C) of the Department of Housing and Urban Development Reform Act of 1989, this document notifies the public of funding awards for Fiscal Year 1999 Community Outreach Partnership Centers Program. The purpose of this document is to announce the names and addresses of the award winners and the amount of the awards which are to be used to establish and operate Community Outreach Partnership Centers that will conduct competent and qualified

research and investigation on theoretical or practical problems in large and small cities; and facilitate partnerships and outreach activities between institutions of higher education, local communities, and local governments to address urban problems.

FOR FURTHER INFORMATION CONTACT: Jane Karadbil, Office of University Partnerships, U.S. Department of Housing and Urban Development, Room 8110, 451 Seventh Street, SW, Washington, DC 20410, telephone (202) 708–1537, extension 5918. To provide service for persons who are hearing-or-speech-impaired, this number may be reached via TTY by Dialing the Federal Information Relay Service on 1–800–877–TTY, 1–800–877–8339, or 202–708–1455. (Telephone number, other than ''800'' TTY numbers are not toll free.)

SUPPLEMENTARY INFORMATION: The Community Outreach Partnership Centers Program was enacted in the Housing and Community Development Act of 1992 (Pub. L. 102–550, approved October 28, 1992) and is administered by the Office of University Partnerships under the Assistant Secretary for Policy Development and Research. In addition to this program, the Office of University Partnerships administers HUD's ongoing grant programs to institutions of higher education as well as creates initiatives through which colleges and universities can bring their traditional missions of teaching, research, service, and outreach to bear on the pressing local problems in their communities.

The Community Outreach Partnership Centers Program provides funds for: Research activities which have practical application for solving specific problems in designated communities and neighborhoods; outreach, technical assistance and information exchange activities which are designed to address specific problems associated with housing, economic development, neighborhood revitalization, infrastructure, health care, job training, education, crime prevention, planning, and community organizing. On February 26, 1999 (64 FR 9653), HUD published a Notice of Funding Availability (NOFA) announcing the availability of $7.5 million in Fiscal Year 1999 funds for the Community Outreach Partnership Centers Program. The Department reviewed, evaluated and scored the applications received based on the criteria in the NOFA. As a result, HUD has funded 16 applications for New Grants and 6 applications for New Directions Grants. New Grants, which cannot exceed $400,000, are for institutions of higher education just beginning a COPC project. New Directions Grants, which cannot exceed $150,000, are for institutions of higher education that are undertaking new activities or expanding into new neighborhoods. These grants, with their grant amounts are identified below.

The Catalog Federal Domestic Assistance number for this program is 14.511.

In accordance with section 102(a)(4)(C) of the Department of Housing and Urban Development Reform Act of 1989 (101 Stat. 1987, 42 U.S.C. 3545), the Department is publishing details concerning the recipients of funding awards, as follows:

List of Awardees for Grant Assistance Under the FY 1999 Community Outreach Partnership Centers Funding Competition, by Name and Address

New England

1. Springfield College, Dr. Linda Marston, Springfield College, 263 Alden Street, Springfield, MA 01109. Grant: $399,843.

2. University of Vermont, Beverly Blakeney, University of Vermont, 340 Waterman Building, Burlington, VT 05405. Grant: $399,845.

New York/New Jersey

3. Cornell University, Dr. Patricia Pollak, Cornell University, 120 Day Hall, Ithaca, NY 14853. Grant: $399,770.

4. Pratt Institute, Dr. Ron Shiffman, Pratt Institute, 379 DeKalb Avenue, 2nd Floor, Brooklyn, NY 11205. Grant: $150,000.

5. Rowan University, Dr. Jerome Harris, Rowan University, 201 Mullica Hill Road, Glassboro, NJ 08028. Grant: $397,900.

6. State University of New York College at Cortland, Dr. Craig Little, State University of New York College at Cortland, P.O. Box 2000, Cortland, NY 13045. Grant: $400,000.

Mid-Atlantic

7. Georgetown University, Dr. Jeff Collmann, Georgetown University, 37th and O Streets, NW, Washington, DC 20057. Grant: $399,463.

8. Howard University, Dr. Rodney Green, Howard University, 2400 Sixth Street, NW, P.O. Box 1071, Washington, DC 20059. Grant: $150,000.

9. Lynchburg College, Dr. Thomas Seaman, Lynchburg College, 1501 Lakeside Drive, Lynchburg, VA 24501. Grant: $399,838.

Southeast/Caribbean

10. Mercer University, Dr. Peter Brown, Mercer University, 1400 Coleman Avenue, Macon, GA 31207. Grant: $400,000.

11. University of South Florida, Dr. Jerome Lieberman, University of South Florida, 4202 E. Fowler Avenue, Tampa, FL 33620. Grant: $150,000.

12. University of Tennessee at Chattanooga, Lindsay Pardue, University of Tennessee at Chattanooga, 615 McCallie Avenue, Chattanooga, TN 37403. Grant: $398,919.

13. University of Tennessee Knoxville, Dr. Virginia Seitz, University of Tennessee Knoxville, 404 Andy Holt Tower, Knoxville, TN 37996. Grant: 149,998.

14. University of West Florida, Dr. C.E. Wynn Teasley, University of West Florida, 11000 University Parkway, Pensacola, FL 32514. Grant: $399,999.

Midwest

15. Butler University, Dr. Margaret Brabant, Butler University, 4600 Sunset Drive, Indianapolis, IN 46208. Grant: 399,145.

16. Loyola University Chicago, Dr. Philip Nyden, Loyola University Chicago, 820 N. Michigan Avenue, 10th Floor, Chicago, IL 60611. Grant: $399,984.

17. University of Michigan-Flint, Dr. Kristen Skivington, University of Michigan-Flint, 503 Thompson, Flint, MI 48502. Grant: $149,931.

18. University of Toledo, Dr. Henry Moon, University of Toledo, 29—801 W. Bancroft, Toledo, OH 43606. Grant: $399,650.

19. Valparaiso University, Dr. Larry Baas, Valparaiso University, O.P. Kretzmann Hall, Valparaiso, IN 46383. Grant: $399,740.

Southwest

20. University of Texas-Pan American, Dr. Roland Arriola, University of Texas-Pan American, 1201 W. University Drive, Edinburg, TX 78539. Grant: $149,832.

Pacific/Hawaii

21. Occidental College, Dr. Jan Lin, Occidental College, 1600 Campus Road, Los Angeles, CA 90041. Grant: $399,654.

Northwest/Alaska

22. University of Oregon, Dr. David Povey, University of Oregon, 5219 University of Oregon, Eugene, OR 97403. Grant: $399,765.

Dated: September 29, 1999.

Lawrence L. Thompson,

Deputy Assistant Secretary for Policy Development.

[FR Doc. 99–25937 Filed 10–5–99; 8:45 am]

BILLING CODE 4210–62–P

DEPARTMENT OF HOUSING AND URBAN DEVELOPMENT

[Docket No. FR–4410–FA–08]

Announcement of Funding Awards for Fiscal Year 1999 Hispanic-Serving Institutions Assisting Communities Program

AGENCY: Office of the Assistant Secretary for Policy Development and Research, HUD.

ACTION: Announcement of funding awards.

SUMMARY: In accordance with section 102(a)(4)(C) of the Department of Housing and Urban Development Reform Act of 1989, this document notifies the public of funding awards for Fiscal Year 1999 Hispanic-serving Institutions Assisting Communities Program. The purpose of this document is to announce the names and addresses of the award winners and the amount of the awards which are to be used to help Hispanic-serving Institutions of Higher Education expand their role and effectiveness in addressing community development needs in their localities, consistent with the purposes of HUD's Community Development Block Grant program (CDBG).

FOR FURTHER INFORMATION CONTACT: Jane Karadbil, Office of University Partnerships, U.S. Department of Housing and Urban Development, Room 8110, 451 Seventh Street, SW, Washington, DC 20410, telephone (202) 708–1537, extension 5918. To provide service for persons who are hearing-or-speech-impaired, this number may be reached via TTY by Dialing the Federal Information Relay Service on 1–800–877–TTY, 1–800–877–8339, or 202–708–1455. (Telephone number, other than ''800'' TTY numbers are not toll free.)

SUPPLEMENTARY INFORMATION: The Hispanic-serving Institutions Assisting Communities Program (HSIAC) was enacted under section 107 of the CDBG appropriation for fiscal year 1999, as part of the ''Veterans Administration, HUD and Independent Agencies Appropriations Act of 1999'' (Pub. L. 105–276, approved October 21, 1998) and is administered by the Office of University Partnerships under the Assistant Secretary for Policy Development and Research. In addition to this program, the Office of University Partnerships administers HUD's ongoing grant programs to institutions of higher education as well as creates initiatives through which colleges and universities can bring their traditional missions of teaching, research, service, and outreach to bear on the pressing local problems in their communities.

The Hispanic-serving Institutions Assisting Communities Program provides funds for a wide range of CDBG-eligible activities including housing rehabilitation and financing, property demolition or acquisition, public facilities, economic development, business entrepreneurship, and fair housing programs. On February 26, 1999 (64 FR 9671) HUD published a Notice of Funding Availability (NOFA) announcing the availability of $5.65 million in Fiscal Year 1999 funds for the Hispanic-serving Institutions Assisting Communities Program. The Department reviewed, evaluated and scored the applications received based on the criteria in the NOFA. As a result, HUD 14 applications were funded. These grants, with their grant amounts are identified below.

The Catalog Federal Domestic Assistance number for this program is 14.514.

In accordance with section 102(a)(4)(C) of the Department of Housing and Urban Development Reform Act of 1989 (103 Stat. 1987, 42 U.S.C. 3545), the Department is publishing details concerning the recipients of funding awards, as follows:

List of Awardees for Grant Assistance Under the FY 1999 Hispanic-Serving Institutions Assisting Communities Program Funding Competition, by Name and Address

New England

1. Northern Essex Community College, Dr. Katherine Rodger, Northern Essex Community College, 45 Franklin Street, Lawrence, MA 01841. Grant: $400,000.

New York/New Jersey

2. Bronx Community College, Carin Savage, Bronx Community College, University Avenue and 181st Street, Bronx, NY 10453. Grant: $400,000.

3. Passaic County Community College, Todd Sorber, Passaic County Community College, One College Boulevard, Paterson, NJ 07505. Grant: $400,000.

Southeast/Caribbean

4. Barry University, Dr. Jacqueline Mondros, Barry University, 11300 Northeast 2nd Avenue, Miami Shores, FL 33161. Grant: $399,999.

5. Florida International University, Dr. M.A. Ebadian, Florida International University, University Park Campus, EAS 2100, Miami, FL 33199. Grant: $400,000.

6. University of Puerto Rico-Rio Piedras Campus, Consuelo Figueras, University of Puerto Rico-Rio Piedras Campus, P.O. Box 23302, San Juan, PR 00931. Grant: $399,557.

Southwest

7. New Mexico State University, Dr. Keith Mandabach, New Mexico State University, Box 30003, MSC 3AG, Las Cruces, NM 88003. Grant: $370,451.

8. St. Philip's College, Dr. Federico Zaragoza, St. Philip's College, 1801 Martin Luther King Drive, San Antonio, TX 78203. Grant: $397,867.

9. University of Texas-Pan American, Dr. Roland Arriola, University of Texas-Pan American, 1201 W. University Drive, Edinburg, TX 78539. Grant: $398,900.

10. Western New Mexico University, Donna Rees, Western New Mexico University, P.O. Box 680, Silver City, NM 88062. Grant: $334,878.

Rocky Mountains

11. Adams State College, Mary Hoffman, Adams State College, 208 Edgemont, Alamosa, CO 81102. Grant: $342,310.

Pacific/Hawaii

12. Gavilan College, Susan Murphey Patereau, Gavilan College, 5055 Santa Teresa, Blvd., Gilroy, CA 95020. Grant: $399,953.

13. Pima County Community College, Stan Steinman, Pima County Community College, 4905C East Broadway Blvd., #117, Tucson, AZ 85709. Grant: $399,960.

14. Santa Ana College, Dr. Sara Lundquist, Santa Ana College, 1530 W. 17th Street, Santa Ana, CA 92706. Grant: $400,000.

Dated: September 29, 1999.

Lawrence L. Thompson,

Deputy Assistant Secretary for Policy Development.

[FR Doc. 99–25938 Filed 10–5–99; 8:45 am]

BILLING CODE 4210–62–P

DEPARTMENT OF THE INTERIOR

Office of the Assistant Secretary Water and Science

Central Utah Project Completion Act; Notice of Availability of the Record of Decision on the Diamond Fork System Final Supplement to the Final Environmental Impact Statement Documenting the Department of Interior's Approval for the Central Utah Water Conservancy District To Proceed With the Construction of the Proposed Action Alternative

AGENCY: Office of the Assistant Secretary—Water and Science, Department of the Interior.

ACTION: Notice of availability of the Record of Decision on the Diamond Fork System Final Supplement to the Final Environmental Impact Statement.

SUMMARY: On September 29, 1999, Mark Schaefer, Deputy Assistant Secretary—Water and Science, Department of the Interior (Interior), signed the Record of Decision (ROD) which documents the selection of the Proposed Action Alternative as presented in the Diamond Fork System Final Supplement to the Final Environmental Impact Statement (FS–FEIS), INT FES 99–25, filed July 1, 1999. The ROD also approves the Central Utah Water Conservancy District (CUWCD) proceeding with construction of the Diamond Fork System, in accordance with statutory and contractual obligations. The following features will be constructed as part of the Proposed Action: (1) Sixth Water Connection, (2) Tanner Ridge Tunnel, (3) Diamond Fork Siphon, (4) Red Mountain Tunnel, (5) Red Hollow Pipeline, (6) Diamond Fork Creek Outlet, (7) Spanish Fork River Outlet, and (8) possible modifications to Spanish Fork River diversion dams. The ROD acknowledged that value engineering studies would be conducted that could result in minor modifications to the physical facilities to further reduce environmental impacts and reduce construction costs.

The Proposed Action specifically fulfills project needs to: (1) Maintain the statutorily mandated minimum flows in Sixth Water Creek and Diamond Fork Creek; (2) implement Interior's environmental commitments on the Diamond Fork Pipeline from the 1995 ROD, which includes but is not limited to removing high flows brought over from Strawberry Reservoir into the Sixth Water and Diamond Fork creek drainages; (3) meet the CUWCD's M&I water contractual commitments to Salt Lake, Utah and Wasatch Counties, by conveying Bonneville Unit water to Utah Lake for exchange to Jordanelle Reservoir; and (4) provide the Utah Reclamation Mitigation and Conservation Commission (Mitigation Commission) the opportunity and flexibility for future restoration of aquatic and riparian habitat in Sixth Water and Diamond Fork Creeks to protect water quality and threatened species in Diamond Fork Creek.

The FS–FEIS for the Diamond Fork System, considered alternatives to complete the Diamond Fork System as mandated in section 302(a)(6) of the Central Utah Project Completion Act (CUPCA). Interior, the Mitigation Commission, and CUWCD served as the Joint Lead Agencies in the preparation of the NEPA compliance documents.

During preparation of the FEIS, CUWCD consulted formally on listed species with the U.S. Fish and Wildlife Service (USFWS) under § 7 of the Endangered Species Act (16 U.S.C.A. sections 1531 to 1544, as amended). A draft Biological Opinion was issued which evaluated project impacts on the June sucker and Ute ladies' tress. The Opinion concluded the Proposed Action would not affect the bald eagle or peregrine falcon. The Biological Opinion also included a list of recommendations which if agreed to and implemented by the Joint-Lead Agencies, will result in a non-jeopardy Biological Opinion. The Joint-Lead Agencies have included these recommendations as environmental commitments in the ROD. A final Biological Opinion was issued by the USFWS on August 24, 1999.

FOR FURTHER INFORMATION CONTACT: Additional information on matters related to this **Federal Register** notice can be obtained at the address and telephone number set forth below: Mr. Reed Murray, Program Coordinator, CUP Completion Act Office, Department of the Interior, 302 East 1860 South, Provo, UT 84606–6154; Telephone: (801) 379–1237, E-mail: rmurray@uc.usbr.gov.

Dated: September 30, 1999.

Ronald Johnston,

Program Director, Department of the Interior.

[FR Doc. 99–25964 Filed 10–5–99; 8:45 am]

BILLING CODE 4310–RK–P

DEPARTMENT OF THE INTERIOR

Fish and Wildlife Service

Notice of Receipt of Applications for Permit

The following applicants have applied for a permit to conduct certain activities with endangered species. This notice is provided pursuant to section 10(c) of the Endangered Species Act of 1973, *as amended* (16 U.S.C. 1531, *et seq.*):

Applicant: Ray Boyd, Lakeland, TN, PRT–017174.

The applicant requests a permit to import the sport-hunted trophy of one male bontebok (*Damaliscus pygargus dorcas*) culled from a captive herd maintained under the management program of the Republic of South Africa, for the purpose of enhancement of the survival of the species.

Applicant: Frank Tosta, Modesto, CA, PRT–018004.

The applicant requests a permit to import the sport-hunted trophy of one male bontebok (*Damaliscus pyargus dorcas*) culled from a captive herd maintained under the management program of the Republic of South Africa, for the purpose of enhancement of the survival of the species.

Applicant: Cincinnati Zoo and Botanical Garden, Cincinnati, OH, PRT–011866.

The applicant requests a permit to import one wild-born male Chinese giant salamander (*Andrias davidianus*) from the Rotterdam Zoo, Netherlands, for the purpose of enhancement of the survival of the species through captive propagation.

Applicant: University of Wisconsin, Madison, WI, PRT–014946.

The applicant requests a permit to export two male and two female captive-born Cotton-top tamarins (*Saguinus oedipus*) to the Crystal Gardens Zoo, Victoria, British Columbia, Canada, for the purpose of enhancement of the survival of the species through zoological display and conservation education.

Applicant: Rare Feline Breeding Center, Center Hill, FL, PRT–012014.

The applicant requests a permit to sell in foreign commerce one male and one female tiger (*Panthera tigris*) to Jinan Zoological Gardens in Shandong Province, China, for the purpose of enhancement of the survival of the species through propagation and conservation education.

The following applicants have applied for a permit to conduct certain activities with marine mammals. The application was submitted to satisfy requirements of the Marine Mammal Protection Act of 1972, *as amended* (16 U.S.C. 1361 *et seq.*), and the regulations governing marine mammals (50 CFR 18).

Applicant: Carlton Goldthwaite, Raleigh, NC, PRT–017856

The applicant requests a permit to import a polar bear (*Ursus maritimus*)

sport-hunted from the Lancaster Sound polar bear population, Northwest Territories, Canada for personal use.

Applicant: Dr. Roy A. Schultz, Avoca, IA, PRT–017983

The applicant requests a permit to import a polar bear (*Ursus maritimus*) sport-hunted from the Southern Beaufort Sea polar bear population, Northwest Territories, Canada for personal use.

Concurrent with the publication of this notice in the **Federal Register**, the Office of Management Authority is forwarding copies of this application to the Marine Mammal Commission and the Committee of Scientific Advisors for their review.

Written data or comments, requests for copies of the complete application, or requests for a public hearing on this application should be sent to the U.S. Fish and Wildlife Service, Office of Management Authority, 4401 N. Fairfax Drive, Room 700, Arlington, Virginia 22203, telephone 703/358–2104 or fax 703/358–2281, and must be received within 30 days of the date of publication of this notice. Anyone requesting a hearing should give specific reasons why a hearing would be appropriate. The holding of such a hearing is at the discretion of the Director.

Documents and other information submitted for these applications are available for review by any party who submits a written request to the U.S. Fish and Wildlife Service, Office of Management Authority, 4401 North Fairfax Drive, Room 700, Arlington, Virginia 22203. Phone (703) 358–2104 or Fax (703) 358–2281.

Dated: October 1, 1999.

Kristen Nelson,

Acting Chief, Branch of Permits, Office of Management Authority.

[FR Doc. 99–26064 Filed 10–5–99; 8:45 am]

BILLING CODE 4310–55–P

DEPARTMENT OF THE INTERIOR

Fish and Wildlife Service

Availability of an Environmental Assessment and Receipt of an Application for an Incidental Take Permit for the A. Teichert and Son Esparto Mining Project, Yolo County, CA

AGENCY: Fish and Wildlife Service, Interior.

ACTION: Notice of availability and receipt of application.

SUMMARY: A. Teichert and Son, a subsidiary of Teichert, Inc. (Applicant) has applied for an incidental take permit from the U.S. Fish and Wildlife Service (Service) pursuant to section 10(a)(1)(B) of the Endangered Species Act of 1973, as amended. The Service proposes to approve the Applicant's Habitat Conservation Plan and issue an incidental take permit for take of the valley elderberry longhorn beetle (beetle), a federally listed threatened species, as a result of aggregate mining activities on a 98-acre site in Yolo County, California. Mitigation and minimization measures outlined in the Habitat Conservation Plan would offset impacts to a small, isolated stand of beetle habitat, four elderberry shrubs, by transplanting the shrubs to an existing large habitat block that is specifically managed and monitored for the species' long-term survival. This notice advises the public that the Service has opened the comment period on the permit application and the draft Environmental Assessment. The permit application includes the Applicant's Habitat Conservation Plan. The Service will evaluate the application, associated documents, and comments submitted thereon to determine whether the application meets the requirements of National Environmental Policy Act regulations and section 10(a) of Endangered Species Act. If it is determined that the requirements are met, the requested permit will be issued for the incidental take of beetles subject to the provisions of the Applicant's Habitat Conservation Plan. The final National Environmental Policy Act and permit determinations will not be completed until after the end of a 30-day comment period and will fully consider all comments received. The Service will also evaluate whether the issuance of the requested permit complies with section 7 of the Endangered Species Act by conducting an intra-Service section 7 consultation. The resulting section 7 biological opinion, in combination with the above types of evaluation requirements, will be used in the final analysis to determine whether or not to issue the requested permit.

DATES: Written comments should be received on or before November 5, 1999.

ADDRESSES: Comments should be addressed to Wayne White, Field Supervisor, U.S. Fish and Wildlife Service, 2800 Cottage Way, Sacramento, California 95821–6340. Comments may also be sent via facsimile to (916) 414–6714.

FOR FURTHER INFORMATION CONTACT: Ellen Berryman, Fish and Wildlife Biologist, at the above address; telephone (916) 414–6600.

SUPPLEMENTARY INFORMATION:

Availability of Documents

Individuals wishing to obtain copies of the application or Environmental Assessment for review should immediately contact the Sacramento Fish and Wildlife Office at the address above. Documents will also be available for public inspection, by appointment, during normal hours at the above address.

Background

Section 9 of the Endangered Species Act and Federal regulations prohibit the ''taking'' of a species listed as endangered or threatened. However, the Service may, under limited circumstances, issue permits to take listed species incidental to, and not the purpose of, otherwise lawful activities. Regulations governing permits for threatened species are promulgated in 50 CFR 17.32; regulations governing permits for endangered species are promulgated in 50 CFR 17.22.

As specified by the Endangered Species Act, permitted take must be ''incidental to, and not the purpose of, the carrying out of an otherwise lawful activity.'' In order to obtain an incidental take permit, the applicant must submit, in part, a conservation plan specifying ''the impact which will likely result from such taking; what steps the applicant will take to minimize and mitigate such impacts; and the funding that will be available to implement such steps; what alternative actions to such taking the applicant considered and reasons why such alternatives are not being utilized; and such other measures the Secretary (of the U.S. Department of the Interior) may require as being necessary or appropriate for purposes of the plan.'' These requirements are addressed in the Habitat Conservation Plan.

The Applicant seeks coverage for take of the federally listed valley elderberry longhorn beetle incidental to mining activity for the Esparto Mining Project in Yolo County, California. The proposed incidental taking would occur on a 98-acre site in Yolo County California. The site supports four blue elderberry shrubs, which constitute beetle habitat, that could potentially be occupied by this species. The proposed take would be incidental to the lawful activities of aggregate extraction and associated activities (*e.g.*, material conveyance, maintenance, and reclamation).

To mitigate for impacts that would result from the removal of the four valley elderberry shrubs, Teichert proposes to transplant the four elderberry shrubs to an existing

mitigation site along Cache Creek in Yolo County. Additionally, Teichert will achieve a 2:1 mitigation ratio, consistent with Service mitigation guidelines, by designating, maintaining, and monitoring 22 elderberry replacement seedlings with associated native plants. The habitat at the mitigation site is contiguous with a large habitat block along Cache Creek that is known to support the beetle, and is likely to be able to support this species on a long-term basis. Additional information on the mitigation site is included in the Habitat Conservation Plan.

The proposed action addressed in the Environmental Assessment is the issuance of a permit by the Service to allow the incidental take of beetles incidental to the Esparto Mining Project. The Environmental Assessment focuses on the potential impacts on the beetle that may result from issuance of a section 10(a)(1)(B) permit and implementation of the Habitat Conservation Plan. Impacts on other resources (geology, hydrology, cultural resources, land use and socioeconomics, traffic, air quality, and noise) are discussed in detail in the Environmental Impact Report for the Esparto Mining Project and are summarized in this Environmental Assessment. The mining project would be able to proceed and would have similar environmental impacts to resources other than beetles regardless of whether the incidental take permit is issued. The Proposed Action would result in cumulatively significant impacts to beetles, but these impacts would be fully offset through the mitigation measures described above.

Two alternatives were considered in the Environmental Assessment: the proposed action of issuance of an incidental take permit and a no action alternative. In the no action alternative, no incidental take permit would be issued and the elderberry shrubs would be avoided during mining operations. No off-site alternatives were considered in the Environmental Assessment because Yolo County has already approved the Esparto Mining Project and Phase I mining has already commenced.

All interested agencies, organizations, and individuals are urged to provide comments on the permit application and Environmental Assessment. All comments received by the closing date will be considered in finalizing National Environmental Policy Act compliance and permit issuance or denial. The Service will publish a record on its final action in the **Federal Register**.

Dated: September 27, 1999.

Elizabeth H. Stevens,

Deputy Manager, California/Nevada Operations Office, Sacramento, California.

[FR Doc. 99–25926 Filed 10–5–99; 8:45 am]

BILLING CODE 4310–55–P

DEPARTMENT OF THE INTERIOR

Fish and Wildlife Service

Issuance of Permit for Marine Mammals

On July 8, 1999, a notice was published in the **Federal Register**, Vol. 64, No. 130, Page 36890, that an application had been filed with the Fish and Wildlife Service by John F. Babler, Mahtomedi, MN for a permit (PRT–014002) to import one polar bear (*Ursu maritimus*) trophy taken from the Southern Beaufort Sea population, Canada for personal use.

Notice is hereby given that on August 16, 1999, as authorized by the provisions of the Marine Mammal Protection Act of 1972, *as amended* (16 U.S.C. 1361 *et seq.*) the Fish and Wildlife Service authorized the requested permit subject to certain conditions set forth therein.

On May 13, 1999, a notice was published in the **Federal Register**, Vol. 64, No. 92, Page 25898, that an application had been filed with the Fish and Wildlife Service by Joseph R. Zbyski, Englewood, CO, for a permit (PRT–011393) to import one polar bear (*Ursus maritimus*) trophy taken from the Southern Beaufort Sea population, Canada for personal use.

Notice is hereby given that on August 16, 1999, as authorized by the provisions of the Marine Mammal Protection Act of 1972, *as amended* (16 U.S.C. 1361 *et seq.*) the Fish and Wildlife Service authorized the requested permit subject to certain conditions set forth therein.

Documents and other information submitted for these applications are available for review by any party who submits a written request to the U.S. Fish and Wildlife Service, Office of Management Authority, 4401 North Fairfax Drive, Room 700, Arlington, Virginia 22203. Phone (703) 358–2104 or Fax (703) 358–2281.

Dated: October 1, 1999.

Kristen Nelson,

Acting Chief, Branch of Permits, Office of Management Authority.

Documents and other information submitted with the application are available for review, *subject to the requirements of the Privacy Act and Freedom of Information Act,* by any party who submits a written request for a copy of such documents to the above address within 30 days of the date of publication of this notice.

[FR Doc. 99–26063 Filed 10–5–99; 8:45 am]

BILLING CODE 4310–55–P

DEPARTMENT OF THE INTERIOR

Bureau of Land Management

[NN–930–08–1040–00]

Availability of Four Draft Riparian and Aquatic Habitat Management Plan Environmental Impact Statements (DEISs) and Possible Resource Management Plan Amendments (RMPAs)

The Four documents are for:
(1) The Taos Field Office,
(2) The Farmington Field Office,
(3) The Rio Puerco Area of the Albuquerque Field Office, and
(4) The Mimbres Area of the Las Cruces Field Office.

AGENCY: Bureau of Land Management, Interior.

ACTION: Notice of availability, public open house and public hearing schedule.

SUMMARY: The Bureau of Land Management (BLM) announces the availability of four Draft Riparian and Aquatic Habitat Management Plan Environmental Impact Statements (DEISs) and Possible Resource Management Plan Amendments (RMPAs). The four documents are for Taos Field Office, Farmington Field Office, the Rio Puerco Area of the Albuquerque Field Office and the Mimbres Area of the Las Cruces Field Office. The draft documents analyzed the effects of the three alternatives in each of the four documents. The alternatives analyze different methods for restoring and protecting riparian habitats under the jurisdiction of the Bureau of Land Management. We would very much appreciate your review and submission of comments on the Drafts so that we can include your contributions in the preparation of the Finals of these four documents. The alternative selected for implementation following review and analysis of comments received on the Draft EIS will be described as the Riparian and Aquatic Habitat Management Plan in each of the respective Final EISs.

If an alternative is selected that requires the amendment of the respective Resource Management Plans these Draft documents would be used to satisfy the RMPA requirement. To that end the public comment period is

scheduled for ninety (90) days, which is the minimum required for an RMPA process. At the end of this process, if an alternative is selected that requires it, the BLM plans to amend the RMPs for which they apply. The ninety (90) day public comment period starts October 15, 1999 and ends on January 12, 2000 for the four draft documents.

Notice is also given that public open houses and public hearings will be held for the four documents. The open houses will held from 6:00 p.m. to 7:00 p.m. with BLM staff present to discuss and answer questions. The open houses will be held one hour before the start of each of the public hearings. The public hearings will be held beginning at 7:00 pm and will continue until those signed up to speak have had an opportunity to do so. The public hearings are held to seek public comment on the adequacy of the four Draft documents including alternatives and the impacts of those alternatives.

DATES: Open houses and public hearings are scheduled as follows:

November 15, 1999 at the BLM Taos Field Office, 226 Cruz Alta Road, Taos, NM, Open House 6:00 p.m. to 7:00 p.m., Public Hearing begin at 7:00 p.m. for the Draft Taos Field Office Riparian and Aquatic Habitat Management Plan Environmental Impact Statement (DEIS) and Possible Resource Management Plan Amendment (RMPA).

November 16, 1999 at Civic Center, 200 West Arrington, Farmington, NM., Open House 6:00 p.m. to 7:00 p.m., Public Hearing begin at 7:00 pm. for the Draft Farmington Field Office Riparian and Aquatic Habitat Management Plan Environmental Impact Statement (DEIS) and Possible Resource Management Plan Amendment (RMPA).

November 17, 1999 at Cuba High School, 50 County Road 13, Cuba, NM., Open House 6:00 p.m. to 7:00 p.m., Public Hearing begin at 7:00 pm. for the Draft Albuquerque Field Office Riparian and Aquatic Habitat Management Plan Environmental Impact Statement (DEIS) and Possible Resource Management Plan Amendment (RMPA).

November 18, 1999 at the BLM Albuquerque Field Office, 435 Montano NE, Albuquerque, NM., Open House 6:00 p.m. to 7:00 p.m., Public Hearing begin at 7:00 p.m. for the Draft Albuquerque Field Office Riparian and Aquatic Habitat Management Plan Environmental Impact Statement (DEIS) and Possible Resource Management Plan Amendment (RMPA).

November 22, 1999 at the Lordsburg Civic Center, 313 East 4th Street, Lordsburg, NM, Open House 6:00 p.m. to 7:00 p.m., Public Hearing begin at 7:00 p.m. for the Draft Las Cruces Field Office Riparian and Aquatic Habitat Management Plan Environmental Impact Statement (DEIS) and Possible Resource Management Plan Amendment (RMPA).

November 23, 1999 at Las Cruces Field Office, 1800 Marquess, Las Cruces, NM, Open House 6:00 p.m. to 7:00 p.m., Public Hearing begin at 7:00 p.m. for the Draft Las Cruces Field Office Riparian and Aquatic Habitat Management Plan Environmental Impact Statement (DEIS) and Possible Resource Management Plan Amendment (RMPA).

ADDRESSES: Written comments on the Draft documents should be sent as follows:

Comment on the Draft Taos Field Office Riparian and Aquatic Habitat Management Plan and Possible RMP Amendment should be sent to: Taos Field Office, Taos HMP/EIS/RMPA Team Leader, 226 Cruz Alta Road, Taos, NM 87571–5983.

Comment on the Draft Farmington Field Office Riparian and Aquatic Habitat Management Plan and Possible RMP Amendment should be sent to: Farmington Field Office, Farmington HMP/EIS/RMPA Team Leader, 1235 La Plata Highway, Farmington, NM 87401–1808.

Comment on the Draft Albuquerque Field Office Riparian and Aquatic Habitat Management Plan and Possible RMP Amendment should be sent to: Albuquerque Field Office, Rio Puerco HMP/EIS/RMPA Team Leader, 435 Montano Road, NE, Albuquerque, NM 87107–4935.

Comment on the Draft Las Cruces Field Office Riparian and Aquatic Habitat Management Plan and Possible RMP Amendment should be sent to: Las Cruces Field Office, Mimbres HMP/EIS/RMPA Team Leader, 1800 Marquess Street, Las Cruces, NM 88005–3371.

Comments, including names and street addresses of respondents, will be available for public review at the above address during regular business hours (8:00 am to 4:30 pm) Monday through Friday, except holidays, and may be published as part of the EIS and possible RMPA. Individual respondents may request confidentiality. If you wish to withhold your name or street address from public review or from disclosure under the Freedom of Information Act, you must state this prominently at the beginning of your written comments. Such request will be honored to the extent allowed by law. All submissions from organizations or businesses, and from individuals identifying themselves as representatives or officials of organizations or businesses, will be made available for public inspection in their entirety.

FOR FURTHER INFORMATION CONTACT:

(1) Taos Field Office—Pam Herrera—505–751–4705.

(2) Farmington Field Office—Bob Moore—505–599–6311.

(3) Albuquerque Field Office—Jim Silva—505–761–8901.

(4) Las Curces Field Office—Bill Merhege—505–525–4369.

SUPPLEMENTARY INFORMATION: The four Draft Riparian and Aquatic Habitat Management Plan and Environmental Impact Statements and Possible RMP Amendments are being prepared to provide comprehensive riparian and aquatic management guidance for restoring and protecting riparian habitat under BLM jurisdiction.

Dated: September 30, 1999.

Carsten F. Goff,

Acting State Director.

[FR Doc. 99–25963 Filed 10–5–99; 8:45 am]

BILLING CODE 4310–FB–M

INTERNATIONAL TRADE COMMISSION

[Investigations Nos. 701–TA–269–270 (Review) and 731–TA–311–317 and 379–380 (Review)]

Brass Sheet and Strip From Brazil, Canada, France, Germany, Italy, Japan, Korea, The Netherlands and Sweden

AGENCY: United States International Trade Commission.

ACTION: Revised schedule for the subject five-year reviews.

EFFECTIVE DATE: September 28, 1999.

FOR FURTHER INFORMATION CONTACT: Jonathan Seiger (202–205–3183), Office of Investigations, U.S. International Trade Commission, 500 E Street SW., Washington, DC 20436. Hearing-impaired persons can obtain information on this matter by contacting the Commission's TDD terminal on 202–205–1810. Persons with mobility impairments who will need special assistance in gaining access to the Commission should contact the Office of the Secretary at 202–205–2000. General information concerning the Commission may also be obtained by accessing its internet server (http://www.usitc.gov).

SUPPLEMENTARY INFORMATION: Effective July 12, 1999, the Commission

established a schedule for the conduct of the subject five-year reviews (64 FR 38688, July 19, 1999). The Commission has determined to exercise its authority to extend the review period by up to 90 days pursuant to 19 U.S.C. 1675(c)(5)(B), and is hereby revising its schedule.

The Commission's new schedule for the five-year reviews is as follows: The prehearing staff report will be placed in the nonpublic record on December 14, 1999; the deadline for filing prehearing briefs is December 23, 1999; requests to appear at the hearing must be filed with the Secretary to the Commission not later than December 29, 1999; the prehearing conference will be held at the U.S. International Trade Commission Building at 9:30 a.m. on January 3, 2000; the hearing will be held at the U.S. International Trade Commission Building at 9:30 a.m. on January 6, 2000; the deadline for filing posthearing briefs is January 14, 2000; the Commission will make its final release of information on January 28, 2000; and final party comments are due on February 1, 2000.

For further information concerning these five-year reviews see the Commission's notice cited above and the Commission's Rules of Practice and Procedure, part 201, subparts A through E (19 CFR part 201), and part 207, subparts A and C (19 CFR part 207).

Authority: These five-year reviews are being conducted under authority of title VII of the Tariff Act of 1930; this notice is published pursuant to section 207.62 of the Commission's rules.

Issued: September 28, 1999.

By order of the Commission.

Donna R. Koehnke,

Secretary.

[FR Doc. 99–26041 Filed 10–5–99; 8:45 am]

BILLING CODE 7020–02–P

INTERNATIONAL TRADE COMMISSION

[Investigations Nos. 701–TA–265, 267 and 268 (Review), 731–TA–297–299 (Review), and 731–TA–304 and 305 (Review)]

Certain Cooking Ware From China, Korea, Mexico, and Taiwan

AGENCY: United States International Trade Commission.

ACTION: Revised schedule for the subject five-year reviews.

EFFECTIVE DATE: September 29, 1999

FOR FURTHER INFORMATION CONTACT: Woodley Timberlake (202–205–3188), Office of Investigations, U.S. International Trade Commission, 500 E Street SW, Washington, DC 20436. Hearing-impaired persons can obtain information on this matter by contacting the Commission's TDD terminal on 202–205–1810. Persons with mobility impairments who will need special assistance in gaining access to the Commission should contact the Office of the Secretary at 202–205–2000. General information concerning the Commission may also be obtained by accessing its internet server (http://www.usitc.gov).

SUPPLEMENTARY INFORMATION: Effective July 7, 1999, the Commission established a schedule for the conduct of the subject five-year reviews (64 FR 38471, July 16, 1999). The Commission has determined to exercise its authority to extend the review period by up to 90 days pursuant to 19 U.S.C. 1675(c)(5)(B), and is hereby revising its schedule.

The Commission's new schedule for the five-year reviews is as follows: the prehearing staff report will be placed in the nonpublic record on December 21, 1999; the deadline for filing prehearing briefs is January 10, 2000; requests to appear at the hearing must be filed with the Secretary to the Commission not later than January 19, 2000; the prehearing conference will be held at the U.S. International Trade Commission Building at 9:30 a.m. on January 21, 2000; the hearing will be held at the U.S. International Trade Commission Building at 9:30 a.m. on January 27, 2000; the deadline for filing posthearing briefs is February 7, 2000; the Commission will make its final release of information on March 7, 2000; and final party comments are due on March 10, 2000.

For further information concerning these five-year reviews see the Commission's notice cited above and the Commission's Rules of Practice and Procedure, part 201, subparts A through E (19 CFR part 201), and part 207, subparts A and C (19 CFR part 207).

Authority: These five-year reviews are being conducted under authority of title VII of the Tariff Act of 1930; this notice is published pursuant to section 207.62 of the Commission's rules.

By order of the Commission.

Issued: September 30, 1999.

Donna R. Koehnke,

Secretary.

[FR Doc. 99–26044 Filed 10–5–99; 8:45 am]

BILLING CODE 7020–02–P

INTERNATIONAL TRADE COMMISSION

[Investigations Nos. 731–TA–406 and 408 (Reviews)]

Electrolytic Manganese Dioxide From Greece and Japan

AGENCY: United States International Trade Commission.

ACTION: Scheduling of full five-year reviews concerning the antidumping duty orders on electrolytic manganese dioxide from Greece and Japan.

SUMMARY: The Commission hereby gives notice of the scheduling of full reviews pursuant to section 751(c)(5) of the Tariff Act of 1930 (19 U.S.C. 1675(c)(5)) (the Act) to determine whether revocation of the antidumping duty orders on electrolytic manganese dioxide from Greece and Japan would be likely to lead to continuation or recurrence of material injury. For further information concerning the conduct of these reviews and rules of general application, consult the Commission's Rules of Practice and Procedure, part 201, subparts A through E (19 CFR part 201), and part 207, subparts A, D, E, and F (19 CFR part 207). Recent amendments to the Rules of Practice and Procedure pertinent to five-year reviews, including the text of subpart F of part 207, are published at 63 FR 30599, June 5, 1998, and may be downloaded from the Commission's World Wide Web site at http://www.usitc.gov/rules.htm.

EFFECTIVE DATE: September 28, 1999.

FOR FURTHER INFORMATION CONTACT: Pamela Luskin (202–205–3189), Office of Investigations, U.S. International Trade Commission, 500 E Street SW, Washington, DC 20436. Hearing-impaired persons can obtain information on this matter by contacting the Commission's TDD terminal on 202–205–1810. Persons with mobility impairments who will need special assistance in gaining access to the Commission should contact the Office of the Secretary at 202–205–2000. General information concerning the Commission may also be obtained by accessing its Internet server (http://www.usitc.gov).

SUPPLEMENTARY INFORMATION:

Background.

On August 5, 1999, the Commission determined that responses to its notices of institution of the subject five-year reviews were such that full reviews pursuant to section 751(c)(5) of the Act should proceed (64 FR 46407, August 25, 1999). A record of the

Commissioners' votes and the Commission's statement on adequacy are available from the Office of the Secretary and at the Commission's web site.

Participation in the Review and Public Service List.

Persons, including industrial users of the subject merchandise and, if the merchandise is sold at the retail level, representative consumer organizations, wishing to participate in these reviews as parties must file an entry of appearance with the Secretary to the Commission, as provided in section 201.11 of the Commission's rules, by 45 days after publication of this notice. A party that filed a notice of appearance following publication of the Commission's notices of institution of the reviews need not file an additional notice of appearance. The Secretary will maintain a public service list containing the names and addresses of all persons, or their representatives, who are parties to these reviews.

Limited Disclosure of Business Proprietary Information (BPI) Under an Administrative Protective Order (APO) and BPI Service List.

Pursuant to section 207.7(a) of the Commission's rules, the Secretary will make BPI gathered in these reviews available to authorized applicants under the APO issued in the reviews, provided that the application is made by 45 days after publication of this notice. Authorized applicants must represent interested parties, as defined by 19 U.S.C. 1677(9), who are parties to the reviews. A party granted access to BPI following publication of the Commission's notices of institution of the reviews need not reapply for such access. A separate service list will be maintained by the Secretary for those parties authorized to receive BPI under the APO.

Staff Report.

The prehearing staff report in these reviews will be placed in the nonpublic record on February 10, 1999, and a public version will be issued thereafter, pursuant to section 207.64 of the Commission's rules.

Hearing

The Commission will hold a hearing in connection with these reviews beginning at 9:30 a.m. on March 2, 2000, at the U.S. International Trade Commission Building. Requests to appear at the hearing should be filed in writing with the Secretary to the Commission on or before February 24, 2000. A nonparty who has testimony that may aid the Commission's deliberations may request permission to present a short statement at the hearing. All parties and nonparties desiring to appear at the hearing and make oral presentations should attend a prehearing conference to be held at 9:30 a.m. on February 28, 2000, at the U.S. International Trade Commission Building. Oral testimony and written materials to be submitted at the public hearing are governed by sections 201.6(b)(2), 201.13(f), 207.24, and 207.66 of the Commission's rules. Parties must submit any request to present a portion of their hearing testimony *in camera* no later than 7 days prior to the date of the hearing.

Written Submissions

Each party to the reviews may submit a prehearing brief to the Commission. Prehearing briefs must conform with the provisions of section 207.65 of the Commission's rules; the deadline for filing is February 22, 2000. Parties may also file written testimony in connection with their presentation at the hearing, as provided in section 207.24 of the Commission's rules, and posthearing briefs, which must conform with the provisions of section 207.67 of the Commission's rules. The deadline for filing posthearing briefs is March 13, 2000; witness testimony must be filed no later than three days before the hearing. In addition, any person who has not entered an appearance as a party to the reviews may submit a written statement of information pertinent to the subject of the reviews on or before March 13, 2000. On April 12, 2000, the Commission will make available to parties all information on which they have not had an opportunity to comment. Parties may submit final comments on this information on or before April 17, 2000, but such final comments must not contain new factual information and must otherwise comply with section 207.68 of the Commission's rules. All written submissions must conform with the provisions of section 201.8 of the Commission's rules; any submissions that contain BPI must also conform with the requirements of sections 201.6, 207.3, and 207.7 of the Commission's rules. The Commission's rules do not authorize filing of submissions with the Secretary by facsimile or electronic means.

In accordance with sections 201.16(c) and 207.3 of the Commission's rules, each document filed by a party to the reviews must be served on all other parties to the reviews (as identified by either the public or BPI service list), and a certificate of service must be timely filed. The Secretary will not accept a document for filing without a certificate of service.

Determination

The Commission has determined to exercise its authority to extend the review period by up to 90 days pursuant to 19 U.S.C. 1675(c)(5)(B).

Authority: These reviews are being conducted under authority of title VII of the Tariff Act of 1930; this notice is published pursuant to section 207.62 of the Commission's rules.

Issued: September 29, 1999.

By order of the Commission.

Donna R. Koehnke,

Secretary.

[FR Doc. 99–26043 Filed 10–5–99; 8:45 am]

BILLING CODE 7020–02–P

INTERNATIONAL TRADE COMMISSION

Certain Pipe and Tube From Argentina, Brazil, Canada, India, Korea, Mexico, Singapore, Taiwan, Thailand, Turkey, and Venezuela [1]

AGENCY: United States International Trade Commission.

ACTION: Scheduling of full five-year reviews concerning the countervailing duty and antidumping duty orders on certain pipe and tube from Argentina, Brazil, Canada, India, Korea, Mexico, Singapore, Taiwan, Thailand, Turkey, and Venezuela.

SUMMARY: The Commission hereby gives notice of the scheduling of full reviews pursuant to section 751(c)(5) of the Tariff Act of 1930 (19 U.S.C. 1675(c)(5)) (the Act) to determine whether revocation of the countervailing duty and antidumping duty orders on certain pipe and tube from Argentina, Brazil, Canada, India, Korea, Mexico, Singapore, Taiwan, Thailand, Turkey, and Venezuela would be likely to lead to continuation or recurrence of material injury. For further information concerning the conduct of these reviews

[1] The products and investigation numbers for the various countries are: Argentina: light-walled rectangular tube (731–TA–409); Brazil: circular welded nonalloy steel pipe (731–TA–532); Canada: oil country tubular goods (731–TA–276); India: welded carbon steel pipe and tube (731–TA–271); Korea: circular welded nonalloy steel pipe (731–TA–533); Mexico: circular welded nonalloy steel pipe (731–TA–534); Singapore: small diameter standard and rectangular pipe and tube (731–TA–296); Taiwan: small diameter carbon steel pipe and tube (731–TA–132), oil country tubular goods (731–TA–277), light-walled rectangular tube (731–TA–410), and circular welded nonalloy steel pipe (731–TA–536); Turkey: welded carbon steel pipe and tube (701–TA–253 and 731–TA–273); Thailand: welded carbon steel pipe and tube (731–TA–252); and Venezuela: circular welded nonalloy steel pipe (731–TA–537).

and rules of general application, consult the Commission's Rules of Practice and Procedure, part 201, subparts A through E (19 CFR part 201), and part 207, subparts A, D, E, and F (19 CFR part 207). Recent amendments to the Rules of Practice and Procedure pertinent to five-year reviews, including the text of subpart F of part 207, are published at 63 FR 30599, June 5, 1998, and may be downloaded from the Commission's World Wide Web site at http://www.usitc.gov/rules.htm.

EFFECTIVE DATE: September 28, 1999.

FOR FURTHER INFORMATION CONTACT: Brian R. Allen (202–708–4728), Office of Investigations, U.S. International Trade Commission, 500 E Street SW, Washington, DC 20436. Hearing-impaired persons can obtain information on this matter by contacting the Commission's TDD terminal on 202–205–1810. Persons with mobility impairments who will need special assistance in gaining access to the Commission should contact the Office of the Secretary at 202–205–2000. General information concerning the Commission may also be obtained by accessing its internet server (http://www.usitc.gov).

SUPPLEMENTARY INFORMATION:

Background.—On August 5, 1999, the Commission determined that responses to its notice of institution of the subject five-year reviews were such that full reviews pursuant to section 751(c)(5) of the Act should proceed (64 FR 45276, August 19, 1999). A record of the Commissioners' votes, the Commission's statement on adequacy, and any individual Commissioner's statements will be available from the Office of the Secretary and at the Commission's web site.

Participation in these reviews and public service list.—Persons, including industrial users of the subject merchandise and, if the merchandise is sold at the retail level, representative consumer organizations, wishing to participate in these reviews as parties must file an entry of appearance with the Secretary to the Commission, as provided in section 201.11 of the Commission's rules, by 45 days after publication of this notice. A party that filed a notice of appearance following publication of the Commission's notice of institution of these reviews need not file an additional notice of appearance. The Secretary will maintain a public service list containing the names and addresses of all persons, or their representatives, who are parties to these reviews.

Limited disclosure of business proprietary information (BPI) under an administrative protective order (APO) and BPI service list.—Pursuant to section 207.7(a) of the Commission's rules, the Secretary will make BPI gathered in these reviews available to authorized applicants under the APO issued in these reviews, provided that the application is made by 45 days after publication of this notice. Authorized applicants must represent interested parties, as defined by 19 U.S.C. 1677(9), who are parties to these reviews. A party granted access to BPI following publication of the Commission's notice of institution of these reviews need not reapply for such access. A separate service list will be maintained by the Secretary for those parties authorized to receive BPI under the APO.

Staff report.—The prehearing staff report in these reviews will be placed in the nonpublic record on February 17, 2000, and a public version will be issued thereafter, pursuant to section 207.64 of the Commission's rules.

Hearing.—The Commission will hold a hearing in connection with the review beginning at 9:30 a.m. on March 9, 2000, at the U.S. International Trade Commission Building. Requests to appear at the hearing should be filed in writing with the Secretary to the Commission on or before March 1, 2000. A nonparty who has testimony that may aid the Commission's deliberations may request permission to present a short statement at the hearing. All parties and nonparties desiring to appear at the hearing and make oral presentations should attend a prehearing conference to be held at 9:30 a.m. on March 6, 2000, at the U.S. International Trade Commission Building. Oral testimony and written materials to be submitted at the public hearing are governed by sections 201.6(b)(2), 201.13(f), 207.24, and 207.66 of the Commission's rules. Parties must submit any request to present a portion of their hearing testimony *in camera* no later than 7 days prior to the date of the hearing.

Written submissions.—Each party to these reviews may submit a prehearing brief to the Commission. Prehearing briefs must conform with the provisions of section 207.65 of the Commission's rules; the deadline for filing is February 29, 2000. Parties may also file written testimony in connection with their presentation at the hearing, as provided in section 207.24 of the Commission's rules, and posthearing briefs, which must conform with the provisions of section 207.67 of the Commission's rules. The deadline for filing posthearing briefs is March 20, 2000; witness testimony must be filed no later than three days before the hearing. In addition, any person who has not entered an appearance as a party to these review may submit a written statement of information pertinent to the subject of these reviews on or before March 20, 2000. On April 17, 2000, the Commission will make available to parties all information on which they have not had an opportunity to comment. Parties may submit final comments on this information on or before April 21, 2000, but such final comments must not contain new factual information and must otherwise comply with section 207.68 of the Commission's rules. All written submissions must conform with the provisions of section 201.8 of the Commission's rules; any submissions that contain BPI must also conform with the requirements of sections 201.6, 207.3, and 207.7 of the Commission's rules. The Commission's rules do not authorize filing of submissions with the Secretary by facsimile or electronic means.

In accordance with sections 201.16(c) and 207.3 of the Commission's rules, each document filed by a party to these reviews must be served on all other parties to these reviews (as identified by either the public or BPI service list), and a certificate of service must be timely filed. The Secretary will not accept a document for filing without a certificate of service.

Authority: These reviews are being conducted under authority of title VII of the Tariff Act of 1930; this notice is published pursuant to section 207.62 of the Commission's rules.

By order of the Commission.

Issued: September 30, 1999.

Donna R. Koehnke,

Secretary.

[FR Doc. 99–26045 Filed 10–5–99; 8:45 am]

BILLING CODE 7020–02–P

INTERNATIONAL TRADE COMMISSION

[Investigations Nos. 104–TAA–7 (Review); AA1921–198–200 (Review); and 731–TA–3 (Review)]

Sugar From the European Union; Sugar From Belgium, France, and Germany; and Sugar and Syrups From Canada

Determinations

On the basis of the record [1] developed in the subject five-year reviews, the United States International Trade Commission determines,[2] pursuant to section 751(c) of the Tariff Act of 1930

[1] The record is defined in sec. 207.2(f) of the Commission's Rules of Practice and Procedure (19 CFR 207.2(f)).

[2] Commissioners Crawford and Askey dissenting.

(19 U.S.C. 1675(c)) (the Act), that revocation of the countervailing duty order on sugar from the European Union would be likely to lead to continuation or recurrence of material injury to an industry in the United States within a reasonably foreseeable time. The Commission also determines[3] that revocation of the antidumping findings on sugar from Belgium, France, and Germany would be likely to lead to continuation or recurrence of material injury to an industry in the United States within a reasonably foreseeable time. Further, the Commission determines that revocation of the antidumping duty order on sugar and syrups from Canada would not be likely to lead to continuation or recurrence of material injury to an industry in the United States within a reasonably foreseeable time.

Background

The Commission instituted these reviews on October 1, 1998 (63 FR 52759), and determined on January 7, 1999, that it would conduct full reviews (64 FR 4901, February 1, 1999). Notice of the scheduling of the Commission's reviews and of a public hearing to be held in connection therewith was given by posting copies of the notice in the Office of the Secretary, U.S. International Trade Commission, Washington, DC, and by publishing the notice in the **Federal Register** on March 11, 1999 (64 FR 12178). The hearing was held in Washington, DC, on July 15, 1999, and all persons who requested the opportunity were permitted to appear in person or by counsel.

The Commission transmitted its determination in this investigation to the Secretary of Commerce on September 28, 1999. The views of the Commission are contained in USITC Publication 3238 (September 1999), entitled Sugar from the European Union; Sugar from Belgium, France, and Germany; and Sugar and Syrups from Canada: Investigation Nos. 104–TAA–7 (Review); AA1921–198–200 (Review); and 731–TA–3 (Review).

Issued: September 29, 1999.

By order of the Commission.

Donna R. Koehnke,

Secretary.

[FR Doc. 99–26042 Filed 10–5–99; 8:45 am]

BILLING CODE 7020–02–P

[3] Commissioners Crawford and Askey dissenting.

DEPARTMENT OF JUSTICE

Drug Enforcement Administration

Importation of Controlled Substances; Notice of Withdrawal

As set forth in the **Federal Register** (FR Doc. 99–20435) Vol. 64, No. 152 at page 43224, dated August 9, 1999, ISP Freetown Fine Chemicals, Inc., 238 South Main Street, Assonet, Massachusetts 02702 made application to the Drug Enforcement Administration for registration as an importer of 2,5-dimethoxyamphetamine (7396).

A registered bulk manufacturer of 2,5-dimethoxyamphetamine requested a hearing to deny the proposed registration of ISP Freetown Fine Chemicals. ISP Freetown Fine Chemicals has requested by letter that its application be withdrawn. Therefore, ISP Freetown Fine Chemicals application to import 2,5-dimethoxyamphetamine is hereby withdrawn.

Dated: September 24, 1999.

John H. King,

Deputy Assistant Administrator, Office of Diversion Control, Drug Enforcement Administration.

[FR Doc. 99–25903 Filed 10–5–99; 8:45 am]

BILLING CODE 4410–09–M

DEPARTMENT OF JUSTICE

Drug Enforcement Administration

[Docket No. 96–32]

Pettigrew Rexall Drugs Reinstatement of Registration

On February 16, 1999, the Deputy Administrator of the Drug Enforcement Administration (DEA) issued a final order revoking DEA Certificate of Registration AP0406911 issued to Pettigrew Rexall Drugs (Respondent), effective March 25, 1999. See 64 FR 8855 (February 23, 1999). The Deputy Administrator further ordered that the revocation be stayed for six months from the effective date of the order ''during which time Respondent must present evidence to the Deputy Administrator of Mr. Pettigrew's completion of a training course regarding the proper handling of controlled substances and must submit to random unannounced inspections by DEA personnel without requiring an administrative inspection warrant.'' *Id.*

The Deputy Administrator noted that should Respondent not comply with these conditions or if it is determined that further violations have occurred, an order would be issued lifting the stay and Respondent's DEA Certificate of Registration would be revoked. The Deputy Administrator further noted that should Respondent submit the required information in a timely manner and it is determined that no violations have occurred, a subsequent order would be issued reinstating Respondent's DEA Certificate of Registration and renewing it without limitations.

By letter dated June 4, 1999, Respondent's counsel forwarded a copy of a document entitled, ''Certification of Continuing Pharmaceutical Education Participation'' from the University of Tennessee College of Pharmacy dated May 28, 1999. The document seemed to indicate that Jimmie Max Pettigrew completed the course entitled Tennessee Pharmacy and Drug Law. In addition, the document had handwritten notations of grades allegedly received for the eight assignments of the course. In the letter forwarding this document, Respondent's counsel stated that ''[w]e are submitting this certification of continuing pharmaceutical education participation copy as evidence of Mr. Pettigrew's compliance with your order of February 16, 1999.''

By letter dated June 8, 1999, the Deputy Administrator's office notified Respondent's counsel that based upon the information provided, the Deputy Administrator was unable to determine whether Mr. Pettigrew has successfully completed a course regarding the proper handling of controlled substances. The certification was not signed and there was no indication who wrote the grades listed on the certification.

Thereafter on July 20, 1999, Respondent's counsel forwarded affidavits from the Assistant Dean for Continuing Education and Public Service for the University of Tennessee College of Pharmacy and from Jimmie Max Pettigrew, Respondent's owner and pharmacist, which indicate that Mr. Pettigrew has successfully completed a course in the proper handling of controlled substances.

No evidence has been presented to the Deputy Administrator that any inspections by DEA have revealed any further violations relating to the handling of controlled substances.

The Deputy Administrator concludes that Respondent has met the conditions set forth in the February 16, 1999 final order, and as a result, DEA Certificate of Registration AP0406911 shall be reinstated and renewed. Respondent is reminded that it is required to indicate that there has been action taken against its DEA Certificate of Registration in response to the liability question on any future applications.

Accordingly, the Deputy Administrator of the Drug Enforcement Administration, pursuant to the authority vested in him by 21 U.S.C. 923 and 924 and 28 CFR 0.100(b) and 0.104, hereby orders that DEA Certificate of Registration AP0406911, issued to Pettigrew Rexall Drugs, be, and it hereby is, reinstated and renewed. This order is effective immediately.

Dated: September 24, 1999.

Donnie R. Marshall,

Deputy Administrator.

[FR Doc. 99–25902 Filed 10–5–99; 8:45 am]

BILLING CODE 4410–09–M

DEPARTMENT OF JUSTICE

Drug Enforcement Administration

Manufacturer of Controlled Substances; Notice of Registration

By Notice dated May 12, 1999, and published in the **Federal Register** on may 25, 1999, (64 FR 28214), Research Triangle Institute, Kenneth H. Davis, Jr., Hermann Building, East Institute Drive, P.O. Box 12194, Research Triangle Park, North Carolina 27709, made application by renewal to the Drug Enforcement Administration (DEA) to be registered as a bulk manufacturer of the basic classes of controlled substances listed below:

Drug	Schedule
Marihuana (7360)	I
Cocaine (9041)	II

The institute will manufacture marijuana cigarettes for the National Institute on Drug Abuse (NIDA) and the cocaine will be used for reference standards, human and animal research, as dictated by NIDA.

No comments or objections have been received. DEA has considered the factors in Title 21, United States Code, Section 823(a) and determined that the registration of Research Triangle Institute to manufacture the listed controlled substances is consistent with the public interest at this time. DEA has investigated Research Triangle Institute on a regular basis to ensure that the company's continued registration is consistent with the public interest. These investigations have included inspection and testing of the company's physical security systems, audits of the company's records, verification of the company's compliance with state and local laws, and a review of the company's background and history. Therefore, pursuant to 21 U.S.C. 823 and 28 CFR 0.100 and 0.104, the Deputy Assistant Administrator, Office of Diversion Control, hereby orders that the application submitted by the above firm for registration as a bulk manufacturer of the basis classes of controlled substances listed above is granted.

Dated: September 24, 1999.

John H. King,

Deputy Assistant Administrator, Office of Diversion Control, Drug Enforcement Administration.

[FR Doc. 99–25904 Filed 10–5–99; 8:45 am]

BILLING CODE 4410–09–M

DEPARTMENT OF LABOR

Office of the Secretary

Submission for OMB Review; Comment Request

September 30, 1999.

The Department of Labor (DOL) has submitted the following public information collection requests (ICRs) to the Office of Management and Budget (OMB) for review and approval in accordance with the Paperwork Reduction Act of 1995 (Pub. L. 104–13, 44 U.S.C. Chapter 35). A copy of each individual ICR, with applicable supporting documentation, may be obtained by calling the Department of Labor, Departmental Clearance Officer, Ira Mills (202) 219–5096 ext. 143) or by E-Mail to Mills-Ira@dol.gov.

Comments should be sent to Office of Information and Regulatory Affairs, Attn: OMB Desk Officer for BLS, DM, ESA, ETA, MSHA, OSHA, PWBA, or VETS, Office of Management and Budget, Room 10235, Washington, DC 20503 (202) 395–7316), within 30 days from the date of this publication in the **Federal Register.**

The OMB is particularly interested in comments which:

- Evaluate whether the proposed collection of information is necessary for the proper performance of the functions of the agency, including whether the information will have practical utility;
- Evaluate the accuracy of the agency's estimate of the burden of the proposed collection of information, including the validity of the methodology and assumptions used;
- Enhance the quality, utility, and clarity of the information to be collected; and
- Minimize the burden of the collection of information on those who are to respond,

including through the use of appropriate automated, electronic, mechanical, or other technological collection techniques or other forms of information technology, *e.g.*, permitting electronic submission of responses.

Agency: Employment and Training Administration.

Title: Unemployment Insurance (UI) State Quality Service Plan (SQSP).

OMB Number: 1205–0132.

Frequency: Quarterly; Annually.

Affected Public: State, Local, or Tribal govt.

Number of Respondents: 53.

Activity	Frequency	Respondents	Average time per respondent
ETA 8623A/UI–1	Annual	53	1 hour.
ETA 2208A/UI–3	Quarterly	53	2 hours.
CAP/Tier1	Twice	25	4 hours.
CAP/Tier1	Annual	10	4 hours.
CAP/Tier1	Five	8	4 hours.
CAP/CIPS Tier 2	Twice	53	4 hours.
Other CAPS	Annual	45	4 hours.
ETA 8632/State Plan	Annual	53	2 hours.
Focus Summaries	Five	53	2 hours.

Total Burden Hours: 2,109.

Total Annualized capital/startup costs: $0.

Total annual costs (operating/maintaining systems or purchasing service): $0.

Description: The State Quality Service Plan, formerly called the Program and Budget Plan, is one of several implementing documents for UI

PERFORMS, that allow for an exchange of information between the Federal and State partners to enhance the ability of the program to reflect the joint commitment to continuous improvement and client centered services.

Ira L. Mills,

Departmental Clearance Officer.

[FR Doc. 99–25884 Filed 10–5–99; 8:45 am]

BILLING CODE 4510–30–M

DEPARTMENT OF LABOR

Bureau of Labor Statistics

Business Research Advisory Council; Notice of Meetings and Agenda

The regular Fall meetings of the Business Research Advisory Council and its committees will be held on October 27 and 28, 1999. All of the meetings will be held in the Conference Center of the Postal Square Building, 2 Massachusetts Avenue, NE., Washington, DC.

The Business Research Advisory Council and its committees advise the Bureau of Labor Statistics with respect to technical matters associated with the Bureau's programs. Membership consists of technical officials from American business and industry.

The schedule and agenda for the meetings are as follows:

Wednesday, October 27, 1999—Meeting Rooms 9 and 10

10:00–11:30 a.m.—Committee on Employment Projections

1. Status report on 1998–2008 Projections
2. Major program plans for FY 2000
3. A new approach to evaluating the Office of Employment Projections
4. Discussion of agenda items for the Spring 2000 meeting

1:00–2:30 p.m.—Committee on Compensation and Working Conditions

1. Update on Stock Options Phase 1 test results and Phase 2 plans
2. Discussion of Stock Options
3. Planning for the Spring 2000 meeting: Was today's meeting format successful? Should we do this again?

3:00–4:30 p.m.—Committee on Employment and Unemployment Statistics

1. Consumer Expenditures Survey (CES):
   a. Impact of North American Industry Classification System (NAICS) implementation on CES
   b. Discussion of time series breaks
2. Current Population Survey (CPS):
   a. Impact of new race/ethnic, industry and occupation classifications on CPS
   b. Discussion of time series breaks
3. Job Openings and Labor Turnover Survey (JOLTS):
   a. Discussion of definitions of job openings, hires, and separations, and availability of these data
   b. Discussion of upcoming Response Analysis Survey
4. Discussion of agenda items for the Spring 2000 meeting

Thursday, October 28, 1999—Meeting Rooms 9 and 10

8:30–10:00 a.m.—Committee on Productivity and Foreign Labor Statistics

1. Activities of the Division of International Technical Cooperation
2. Report on the new set of measures of unit labor costs
3. Report on comparisons of international labor force measures
4. Discussion of agenda items for the Spring 2000 meeting

10:30 a.m.—Council Meeting

1. Chairperson's opening remarks
2. Commissioner's address and discussion
3. BLS data collection issues

1:30–3:00 p.m.—Committee on Price Indexes

1. Consumer Price Index
   a. Quality adjustment and new goods
   b. Report on CPI research series
2. International Prices: proposed program improvements
3. Producer Price Index
   a. Effects of the PPI of deregulation in the utilities industries
   b. Efforts to minimize new product bias in the PPI
4. Discussion of agenda items for the Spring 2000 meeting

1:30–3:00 p.m.—Committee on Occupational Safety and Health Statistics (Concurrent Session, Meeting Room 8)

1. Review of the worker demographic and circumstances data from the 1997 Survey of Occupational Injuries and Illness
2. Review of the 1998 Census of Fatal Occupational Injuries results
3. Presentation of data on fatal injuries and non-fatal injuries and illnesses to workers aged 17 and under
4. Discussion of the impact of OSHA recordkeeping changes on the BLS Survey of Occupational Injuries and Illnesses
5. Status of Fiscal Year 2000 Budget for the BLS Occupational Safety and Health Statistics program
6. Discussion of agenda items for the Spring 2000 meeting

The meeting are open to the public. Persons with disabilities wishing to attend these meetings as observers should contact Tracy A. Jack, Liaison, Business Research Advisory Council, at (202) 606–5869, for appropriate accommodations.

Signed at Washington, D.C. the 29th day of September 1999.

Katherine G. Abraham,

Commissioner.

[FR Doc. 99–26038 Filed 10–5–99; 8:45 am]

BILLING CODE 4510–25–M

DEPARTMENT OF LABOR

Occupational Safety and Health Administration

[Docket No. W–100]

Proposed Policy Statement Concerning the Occupational Safety and Health Administration's Use of Voluntary Employer Safety and Health Self-Audits

Authority: Sec. 8(a) and 8(b), Pub. L. 91–596, 84 Stat. 1599 (29 U.S.C. 657).

AGENCY: Occupational Safety and Health Administration, USDOL.

ACTION: Notice of proposed policy statement; request for comment.

SUMMARY: The Occupational Safety and Health Administration (OSHA) is issuing a proposed policy statement describing the agency's treatment of voluntary employer self-audits that assess workplace safety and health conditions, including compliance with the Occupational Safety and Health Act. The proposed policy statement provides that the agency will not routinely request self-audit reports at the initiation of an inspection. Where a voluntary self-audit identifies a hazardous condition and the employer promptly takes self-audit reports at the initiation of an inspection. Where a voluntary self-audit identifies a hazardous condition and the employer promptly takes appropriate corrective measures, OSHA will treat the audit report as evidence of good faith, and not as evidence of a willful violation. OSHA requests public comment regarding it proposed policy statement.

DATES: Written comments must be submitted on or before December 6, 1999.

ADDRESSES: Send two copies of your comments to: OSHA Docket Office, Docket W–100, Room N–2625, Occupational Safety and Health Administration, U.S. Department of Labor, 200 Constitution Avenue NW, Washington, D.C. 20210, Telephone: 202–693–2350. Comments limited to 10 pages or fewer may be faxed to the Docket Office at the following FAX number: 202–693–1648. However, the original and one copy must be mailed to the Docket Office within two days. Electronic comments may also be submitted electronically through the OSHA Internet site at URL, *http://www.osha-slc.gov/e-comments/e-comments-self-audit.html.* Please be aware that information such as studies, journal articles, and so forth cannot be attached to the electronic response and must be submitted in quadruplicate to

the above address. Such attachments must clearly identify the respondent's electronic submission by name, date, and subject, so that they can be attached to the correct response.

FOR FURTHER INFORMATION CONTACT: Richard E. Fairfax, Occupational Safety and Health Administration, Directorate of Compliance Programs, Room N–3468, U.S. Department of Labor, 200 Constitution Avenue, NW, Washington, D.C. 20210, Telephone: 202–693–2100. For electronic copies, contact OSHA's web page on the Internet at http://www.osha.gov.

SUPPLEMENTARY INFORMATION:

I. Explanation of the Proposed Policy

The purpose of the Occupational Safety and Health Act is to assure, so far as possible, safe and healthful working conditions for every working man and woman in the Nation. In order to achieve that goal, the Act requires employers to furnish their employees with employment which is free from recognized hazards that are likely to cause death or serious physical harm, and to comply with occupational safety and health standards issued by the Secretary of Labor. Some courts have inferred from these requirements that employers have an implicit duty to scrutinize their workplaces to identify and correct hazardous conditions. *See Dunlop* v. *Rockwell International.* 540 F.2d 1283, 1291–92 (6th Cir. 1976); *Automatic Sprinkler Corp. of America,* 7 BNA OSHC 1957, 1959 (OSH Review Commission 1979). OSHA also has included an explicit requirement in many standards that employers self-inspect to determine compliance. *See, e.g.,* 29 CFR 1926.20(b) (requiring ''frequent and regular'' inspections of construction sites); 29 CFR 1910.119 (mandating compliance audits and other inspections and investigations for operations with hazardous chemicals); 29 CFR 1910.120 (requiring audits and other reviews for operations with hazardous waste products); and 29 CFR 1910.1025(d), (e) (mandating monitoring and planning to evaluate and to reduce employee exposure to lead).

In addition to required self-audits, many conscientious employers undertake voluntary self-audits in order to foster safe and healthful work environments and to assure compliance with the Occupational Safety and Health Act. For a number of years, OSHA, employers, employee representatives, and other interested parties have considered the role that these voluntary employer self-audits play in meeting the goals of the Act. The purpose of this proposed policy is to provide general guidance regarding the circumstances in which OSHA intends to exercise its authority to obtain voluntary self-audit reports during the course of an inspection, and the manner in which the agency will use voluntary self-audits when it classifies violations of the Occupational Safety and Health Act and when it proposes penalties for such violations. The agency indends that the policy will recognize the value of voluntary self-audit programs under which employers or their agents identify and promptly correct hazardous conditions and will acknowledge that, in limited situations, records relating to voluntary self-audits play an important role in the agency, ability to effectively carry out its inspection and enforcement duties under the Occupational Safety and Health Act.

OSHA recognizes the vital part that voluntary safety and health audits can play in workplace safety and health when employers use them to identify workplace hazards and take the corrective actions needed to control such hazards. OSHA also notes that safety and health audits—when they lead to appropriate corrective action—can provide significant economic benefits for employers by reducing the myriad direct and indirect costs that are associated with occupational injuries and illnesses. These costs include workers' compensation, indemnification and medical payments, sick leave, and lost productivity. Further, voluntary safety and health audits produce tangible benefits for employers who seek to avoid OSHA enforcement actions by identifying conditions that constitute violations of the Occupational Safety and Health Act and by providing employers with the opportunity to rectify those conditions prior to the time that OSHA inspects the work site. A good self-audit program should be especially effective in detecting and preventing the ''high gravity'' and ''repeated'' violations that carry the highest penalties.

It is also the case the documentation derived from employers may be of critical importance during an OSHA inspection, as the agency attempts to ascertain whether an employer is in compliance with the Occupational Safety and Health Act and the standards promulgated under that Act. In addition, the legal burden to establish an employer's actual or constructive knowledge of a violative condition rests with the Secretary of Labor under current Occupational Safety and Health Review Commission precedent and the Secretary is required consider the classification of each violation and to consider the employer's good faith in setting an appropriate monetary penalty. Therefore, OSHA relies, in part, on evidence concerning the employer's safety and health efforts and the employer's state of mind to discharge is duty to enforce the Occupational Safety and Health Act fairly and effectively.

OSHA has broad legal authority to request the production of documentation concerning an employer's voluntarily conducted safety and health audits. *See* 29 U.S.C. 657(b); *Reich* v. *Hercules, Inc.,* 857 F. Supp. 367 (D.N.J. 1994); *Martin* v. *Hammermill Paper Division of Int'l. Paper Co.,* 796 F. Supp. 1474 (S.D. Ala. 1992). Employers generally recognizes that OSHA has legal authority to obtain self-audit reports, but some have urged the agency to issue a policy statement clarifying that it does not intend to exercise that authority routinely.

While many employers conduct voluntary safety and health audits, some employers have expressed concern that OSHA's enforcement powers, and the absence of an explicit policy statement recognizing the value of voluntary self-audits, could deter employers from undertaking voluntary self-auditing activities. Specifically, employers have raised concerns that, if OSHA routinely seeks to obtain employers' voluntary safety and health audit reports for enforcement purposes, some employers might choose not to conduct such audits. This policy statement is designed to convey clearly OSHA's policy and practices concerning voluntary self-audits.

II. Description of Proposed Policy

The draft policy applies to audits (1) that are systematic, documented, and objective reviews conducted by, or for, employers to review their operations and practices to ascertain compliance with the Act, and (2) that are not mandated by the Act, rules or orders issued pursuant to the Act, or settlement agreements. A systematic audit is planned, and it is designed to be appropriate to the scope of the hazards that it addresses and to provide a basis for corrective action. Ad hoc observations made by an employer or a supervisor and ad hoc communications concerning a hazardous condition made during the ordinary course of business are not included within the definition of a ''self-audit'' or ''voluntary self-audit report.'' The findings resulting from the systematic self-audit must be documented contemporaneously (at the time the condition is discovered or immediately after completion of the audit) so as to assure that they receive prompt attention. The self-audit also must be conducted by or supervised by

a competent professional, who is capable of identifying the relevant workplace hazards. However, a self-audit need not be comprehensive in order to qualify for inclusion under the policy; for example, a voluntary self-audit designed to identify hazards associated with a particular process or hazard will qualify for consideration under the policy.

The policy provides that OSHA will not routinely request voluntary self-audit reports when initiating an inspection, and that the agency will not use self-audit reports as a means of identifying hazards upon which to focus during an inspection. Rather, OSHA intends to seek access to such reports only in limited situations in which the agency has an independent basis to believe that a specific safety or health hazard warrants investigation, and has determined that such records may be relevant to identify or determine the circumstances of the hazardous condition.

An example of such a situation is when a fatal or catastrophic accident has occurred, and OSHA is investigating the circumstances of the accident to assess compliance and to assure that hazardous conditions are abated. Another example is when the agency has reason to believe a hazardous non-complying condition exists and the agency is seeking to evaluate the extent of the hazard.

OSHA emphasizes that it is not seeking through this policy statement to expand the situations in which it requests production of self-audit reports beyond its present practice. In addition, OSHA intends to seek access only to those audit reports, or portions of those reports, that are relevant to the particular matters that it is investigating.

OSHA has defined ''voluntary self-audit report'' to include information obtained in the audit, as well as analyses and recommendations. The effect is to include audit information in the documents that OSHA will not routinely request at the initiation of the inspection. OSHA has defined the term this way because the agency believes that the definition responds to the concerns raised by employers about the effect of routine OSHA requests for voluntary self-audit findings. OSHA notes that the U.S. Environmental Protection Agency's self-audit policy statement applies to analyses, conclusions, and recommendations resulting from a self-audit, but excludes data obtained in the audit from the definition of an ''environmental audit report.'' 60 FR 66706, 66711. OSHA requests comment on its proposed definitions.

The proposed policy also contains provisions designed to assure that employers who respond with prompt corrective actions will receive corresponding benefits in an OSHA inspection. These provisions would come into play when OSHA obtains a voluntary self-audit report, whether because the employer has voluntarily provided it to OSHA, as commonly occurs, or because OSHA has required production of the report.

The proposed policy statement explains that OSHA will treat the self-audit report as evidence of good faith, not as evidence of a willful violation, provided that the employer has responded promptly with appropriate corrective action to the violative conditions identified in the audit. Accordingly, if the employer is responding in good faith and in a timely manner to correct a violative condition discovered in a voluntary self-audit, and OSHA detects the condition in an inspection, OSHA will not use the report as evidence of willfulness. A timely good faith response includes promptly taking diligent steps to correct the violative condition, while providing effective interim employee protection, as necessary.

In addition, OSHA will treat a voluntary self-audit that results in prompt corrective action of the nature described above and appropriate steps to prevent similar violations, as strong evidence of the employer's good faith with respect to the matters addressed. Good faith is one of the statutory factors that OSHA is directed to take into account in assessing penalties. 29 U.S.C. 666(j). Where OSHA finds good faith, OSHA's Field Inspection Reference Manual (the ''FIRM'') authorizes up to a 25 percent reduction in the penalty that otherwise would be assessed. The FIRM treats the presence of a comprehensive safety and health program as a primary indicator of good faith. A comprehensive safety and health program includes voluntary self-audits, but is broader in concept, covering additional elements. OSHA has concluded preliminarily that a voluntary self-audit/correction program of the type described in this statement should be considered evidence of good faith. If the agency does not request an employer's voluntary self-audit reports during the course of an inspection, the employer subsequently may provide such reports to the agency as evidence of its good faith. OSHA requests comment on this issue.

OSHA believes that the policy proposed here would provide appropriate positive recognition of the value of voluntary self-audits while simultaneously enabling the agency to enforce the provision of the Occupational Safety and Health Act effectively. In order to assure that the policy meets these dual goals most effectively, the agency seeks comments from employers, employee representatives, and other interested parties concerning, *inter alia*, the effect that the proposed policy would have upon employers' willingness to conduct voluntary self-audits, the effect that the policy would have upon the agency's ability to enforce the Occupational Safety and Health Act, and the manner in which the policy might be modified to meet these goals better. OSHA invites individuals and organizations to submit comments regarding the propriety of the self-audit policy in general, or regarding any specific issues concerning voluntary employer self-audits that are relevant to the effective and fair enforcement of the Occupational Safety and Health Act.

III. Statement of Proposed Policy on Voluntary Self-Audits

A. Purpose

1. This policy statement describes how OSHA will treat voluntary self-audits in carrying out agency civil enforcement activities. Voluntary self-audits, properly conducted, may discover conditions that violate the Occupational Safety and Health Act so that those conditions can be corrected promptly and similar violations prevented from occurring in the future. This policy statement is intended to provide appropriate, positive treatment that is in accord with the value voluntary self-audits have for employers' safety and health compliance efforts, while also recognizing that access to relevant information is important to the Secretary's inspection and enforcement duties under the Occupational Safety and Health Act.

2. This policy statement sets forth factors that guide OSHA in exercising its informed discretion to request and use the information contained in employers' voluntary self-audit reports. The policy statement is not final agency action. It is intended only as general, internal OSHA guidance, and is to be applied flexibly, in light of all appropriate circumstances. It does not create any legal rights, duties, obligations, or defenses, implied or otherwise, in any party, or bind the agency.

3. This policy statement has three main components:

(a.) It explains that OSHA will refrain from routinely requesting reports of

voluntary self-audits at the initiation of an enforcement inspection:;

(b.) It contains a safe-harbor provision under which, if an employer is responding in good faith to a violative condition identified in a voluntary self-audits report, and OSHA discovers the violation during an enforcement inspection, OSHA will not treat that portion of the report as evidence of willfulness;

(c.) It describes how an employer's response to a voluntary self-audits may be considered evidence of good faith, qualifying the employer for a substantial civil penalty reduction, when OSHA determines a proposed penalty. *See* 29 U.S.C. 666(j). Under this section of the Act, a proposed penalty for an alleged violation is calculated giving due consideration to the good faith of the employer.

B. Definitions

1. ''Self-Audit'' means a systematic, documented, and objective review by an employer of its operations and practices related to meeting the requirements of the Occupational Safety and Health Act.

(a.) ''Systematic'' means that the self-audit is part of a planned effort to prevent, identify, and correct workplace safety and health hazards. A systematic self-audit is designed by the employer to be appropriate to the scope of hazards it is aimed at discovering, and to provide an adequate basis for corrective action;

(b.) ''Documented'' means that the findings of the self-audit are contemporaneously recorded and maintained by the employer;

(c.) ''Objective'' means that the self-audit is conducted by or under the direction of a safety and health professional who is competent to identify workplace safety and health hazards, given the scope and complexity of the processes under review.

2. ''Voluntary'' means that the self-audit is not required by statute, rule, order, or settlement agreement. Voluntary self-audits may assess compliance with substantive legal requirements (*e.g.*, an audit to assess overall compliance with the general machine guarding requirement in 29 CFR 1910.212).

3. ''Voluntary self-audit report'' means the written information, analyses, conclusions, and recommendations resulting from a voluntary self-audit, but does not include matters required to be disclosed to OSHA by the records access rule, 29 CFR 1910.1020, or other rules.

4. ''Good faith'' response means an objectively reasonably, timely, and diligent effort to comply with the requirements of the Act and OSHA standards.

C. OSHA Use of Voluntary Self-Audit Reports

1. No Routine Initial Request for Voluntary Self-Audit Reports

(a.) OSHA will not routinely request voluntary self-audit reports at the initiation of an inspiration. OSHA will not use such reports as a means of identifying hazards upon which to focus inspection activity.

(b.) However, if the agency has an independent basis to believe that a specific safety or health hazard warranting investigation exists, OSHA may exercise its authority to obtain the relevant portions of voluntary self-audit reports relating to a hazard.

2. Safe Harbor—No Use of Voluntary Self-Audit Reports as Evidence of Willfulness

A violation is considered willful if the employer has intentionally violated a requirement of the Act, shown reckless disregard for whether it was in violation of the Act, or demonstrated plain indifference to employee safety and health. Consistent with the prevailing law on willfulness, if an employer is responding in good faith to a violative condition discovered through a voluntary self-audit and OSHA detects the condition during an inspection, OSHA will not use the voluntary self-audit report as evidence that the violation is willful.

This policy is intended to apply when, through a voluntary self-audit, the employer learns that violative conditions exist and promptly takes diligent steps to correct the volative conditions and bring itself into compliance, while providing effective interim employee protection, as necessary.

3. Good Faith Penalty Reduction

Under the OSH Act, an employer's good faith normally reduces the amount of penalty that otherwise would be assessed for a violation. 29 U.S.C. 666(j). OSHA's FIRM provides up to a 25% penalty reduction for employers who have implemented a safety and health program, including voluntary self-audits. OSHA will treat a voluntary self-audit that results in prompt action to correct violations found, in accordance with paragraph C.2. above, and appropriate steps to prevent similar violations, as strong evidence of an employer's good faith with respect to the matters covered by the voluntary self-audit. This policy does not apply to repeat violations.

D. Federal Program Change

This policy statement describes a Federal OSHA Program change for which State adoption is not required; however, in the interest of national consistency, States are encouraged to adopt a similar policy regarding voluntary self-audits.

This document was prepared under the direction of Charles N. Jeffress, Assistant Secretary for Occupational Safety and Health, U.S. Department of Labor, 200 Constitution Avenue, NW., Washington, DC 20210.

Signed at Washington, DC, this 30th day of September 1999.

Charles N. Jeffress,

Assistant Secretary of Labor.

[FR Doc. 99–25956 Filed 10–5–99; 8:45 am]

BILLING CODE 4510–26–M

LIBRARY OF CONGRESS

Copyright Office

[Docket No. RM 98–9A]

Privacy Act of 1974: Current Systems of Records

AGENCY: Copyright Office, Library of Congress.

ACTION: Amendments.

SUMMARY: This document makes corrections to the Copyright Office's Notice of Current Systems of Records published in the **Federal Register** on Monday, September 28, 1998, as well as adding four new systems of records maintained by the Copyright Office related to appeals of Office decisions and notices filed with the Office. The entire current list of systems of records is available on the Copyright Office's website.

DATES: Comments are due on or before November 5, 1999. The changes made are effective November 22, 1999, unless the Copyright Office publishes notice to the contrary.

FOR FURTHER INFORMATION CONTACT: Marilyn J. Kretsinger, Assistant General Counsel, or Patricia L. Sinn, Senior Attorney. Telephone: (202) 707–8380. Fax: (202) 707–8366.

ADDRESSES: Interested persons should submit ten (10) copies of their written comments, if BY MAIL, to: Marilyn J. Kretsinger, Assistant General Counsel, Copyright GC/I&R, PO Box 70400, Southwest Station, Washington, DC 20024. If delivered BY HAND, ten (10) copies should be brought to: Office of the General Counsel, James Madison Memorial Building, Room LM–403, 101 Independence Avenue, SE, Washington, DC 20540.

SUPPLEMENTARY INFORMATION: On September 28, 1998, the Copyright Office published its most recent system of records as required by the Privacy Act of 1974 (5 U.S.C. 552 a(e)(4)). It noted that the list would be effective November 1, 1998, unless the Office published notice to the contrary. The Office received no comments about the notice from the public and the list went into effect. The Office is, however, now amending information contained in the list as last published concerning records maintained on the agreements between the Library of Congress and copyright owners of motion pictures and is also amending the notification procedures for several systems in order to establish the same procedure for accessing all systems. During the last year, the Office has also developed four additional systems of records that are now being added to the overall list.

Categories being added to the list include appeals of the Office's refusal to register a claim submitted by a copyright claimant; records concerning an online service provider's designation of an agent; records related to initial notices of digital transmissions of sound recordings; and records of notice of designation as a collective. These additional systems will become effective 45 days after publication of this document in the **Federal Register** unless the Office publishes notice to the contrary within 30 days after publication. The Office also notes that in the future it will only publish specific amendments, deletions, or additions to the list of current systems of records in the **Federal Register**, but it will maintain online the entire current system of records and make this list available to any member of the public who requests it.

I. Revisions to Systems of Records

A. Table of Contents

1. Amend the Table of Contents as follows: Redesignate ''CO–28—Litigation Statement Authorization File'' as ''CO–31—Litigation Statement Authorization File'' and add three additional systems of records to read as follows: ''CO–28—Initial Notice of Digital Transmission of Sound Recordings Under Statutory License''; ''CO–29—Notice of Designation as Collective Under Statutory License Notices''; and ''CO–30—Online Service Provider Designation of Agents File''; after the new CO–31, add ''CO–32—Copyright Office Appeal Decisions''.

B. Systems of Records

2. Amend ''CO–5'' to read as follows:

CO–5

* * * * *

SYSTEM LOCATION:

Motion Picture, Broadcasting, and Recorded Sound Division, Library of Congress, Washington, DC 20559–6000.

* * * * *

ROUTINE USES OF RECORDS MAINTAINED IN THE SYSTEM, INCLUDING CATEGORIES OF USERS AND THE PURPOSES OF SUCH USES:

The Library of Congress uses these records to determine if it has a Motion Picture Agreement with the depositor of a motion picture. If the Library has such an agreement, the copy of the motion picture submitted will be returned to the remitter if a written request has been made. In the absence of such an agreement, the Motion Picture, Broadcasting, and Recorded Sound Division of the Library of Congress will retain the copy.

POLICIES AND PRACTICES FOR STORING, RETRIEVING, ACCESSING, RETAINING, AND DISPOSING OF RECORDS IN THE SYSTEM:

STORAGE:

The Agreements are retained and are publicly available in the Motion Picture Reading Room, Motion Picture, Broadcasting, and Recorded Sound Division, Room LM 338, James Madison Building, Library of Congress, Washington, D.C. 20540–4690.

* * * * *

SYSTEM MANAGER(S) AND ADDRESS:

Reference Assistant, Motion Picture, Broadcasting, and Recorded Sound Division, Room LM 338, James Madison Building, Library of Congress, Washington, DC 20540–4690.

3. In CO–1 through CO–28 revise the ''NOTIFICATION PROCEDURE'' to read as follows:

NOTIFICATION PROCEDURE:

Inquiries about a record should be in writing addressed to the Supervisory Copyright Information Specialist, GC/I&R, PO Box 70400, Southwest Station, Washington, DC 20024.

II. Redesignation and Addition of Systems of Records

4. Redesignate System of Record CO–28 as CO–31 and add new Systems of Records CO–28, CO–29, CO–30 and CO–32 to read as follows:

CO–28

SYSTEM NAME:

Initial Notice of Digital Transmission of Sound Recordings under Statutory License.

SYSTEM LOCATION:

Copyright Office, Library of Congress, Washington, DC 20559–6000.

CATEGORIES OF INDIVIDUALS COVERED BY THE SYSTEM:

Entities engaged in the digital transmission of sound recordings pursuant to statutory license.

CATEGORIES OF RECORDS IN THE SYSTEM:

Name of service, address of the service, telephone number, facsimile number, website address of service, name and title of an authorized representative of the service, signature of the authorized representative, and date of signature.

AUTHORITY FOR MAINTENANCE OF THE SYSTEM:

17 U.S.C. 114(f)(4)(A).

ROUTINE USES OF RECORDS MAINTAINED IN THE SYSTEM, INCLUDING CATEGORIES OF USERS AND THE PURPOSES OF SUCH USES:

Records of notices of digital transmissions of sound recordings are useful to copyright owners of sound recordings who wish to monitor the use of their works by digital transmission services.

POLICIES AND PRACTICES FOR STORING, RETRIEVING, ACCESSING, RETAINING, AND DISPOSING OF RECORDS IN THE SYSTEM:

STORAGE:

Folders in a file cabinet and binders. Information available through Copyright Office homepage.

RETRIEVABILITY:

Initial notices are indexed by service name.

SAFEGUARDS:

The records are maintained in a room which is restricted to authorized personnel and locked during nonworking hours.

RETENTION AND DISPOSAL:

Retained indefinitely.

SYSTEM MANAGER(S) AND ADDRESS:

Chief, Licensing Division, Copyright Office, Library of Congress, Washington, DC 20557–6400.

NOTIFICATION PROCEDURE:

Inquiries about a Service's record should be in writing addressed to the Supervisory Copyright Information Specialist, GC/I&R, PO Box 70400, Southwest Station, Washington, DC 20024.

RECORD ACCESS PROCEDURES:

Requests from individuals should be in writing and addressed to the official designated under ''Notification Procedure.''

CONTESTING RECORD PROCEDURES:

See rules published in 37 CFR part 204.

RECORD SOURCE CATEGORIES:

Authorized agent of service to which record pertains.

CO–29

SYSTEM NAME:

Notice of Designation as Collective under Statutory License.

SYSTEM LOCATION:

Copyright Office, Library of Congress, Washington, DC 20559–6000.

CATEGORIES OF INDIVIDUALS COVERED BY THE SYSTEM:

Collectives designated under a statutory license to collect and distribute royalty funds.

CATEGORIES OF RECORDS IN THE SYSTEM:

Name of collective, address of the collective, telephone number, facsimile number, website address of collective, and statement of authorization.

AUTHORITY FOR MAINTENANCE OF THE SYSTEM:

17 U.S.C. 114(f)(4)(A).

ROUTINE USES OF RECORDS MAINTAINED IN THE SYSTEM, INCLUDING CATEGORIES OF USERS AND THE PURPOSES OF SUCH USES:

Records of notice of designation as collective are useful to the services which make digital transmissions of the sound recordings.

POLICIES AND PRACTICES FOR STORING, RETRIEVING, ACCESSING, RETAINING, AND DISPOSING OF RECORDS IN THE SYSTEM:

STORAGE:

Folders in a file cabinet and binders. Information available through Copyright Office homepage.

RETRIEVABILITY:

Initial notices are indexed by name of collective.

SAFEGUARDS:

The records are maintained in a room which is restricted to authorized personnel and locked during nonworking hours.

RETENTION AND DISPOSAL:

Retained indefinitely.

SYSTEM MANAGER(S) AND ADDRESS:

Chief, Licensing Division, Copyright Office, Library of Congress, Washington, DC 20557–6400.

NOTIFICATION PROCEDURE:

Inquiries about a Service's record should be in writing addressed to the Supervisory Copyright Information Specialist, GC/I&R, P.O. Box 70400, Southwest Station, Washington, DC 20024.

RECORD ACCESS PROCEDURES:

Requests from individuals should be in writing and addressed to the official designated under ''Notification Procedure.''

CONTESTING RECORD PROCEDURES:

See rules published in 37 CFR part 204.

RECORD SOURCE CATEGORIES:

Authorized agent of service to which record pertains.

CO–30

SYSTEM NAME:

OnLine Service Provider Designation of Agent File.

SYSTEM LOCATION:

Copyright Office, Library of Congress, Washington, DC 20559–6000.

CATEGORIES OF INDIVIDUALS COVERED BY THE SYSTEM:

Designated agents of online service providers that receive notification of infringement by service providers.

CATEGORIES OF RECORDS IN THE SYSTEM:

Included in this file are documents that include: (1) The name, address, telephone number, and electronic mail address of a service provider's agent; and (2) other contact information the Register of Copyrights deems appropriate.

AUTHORITY FOR MAINTENANCE OF THE SYSTEM:

17 U.S.C. 701, 702, 705.

ROUTINE USES OF RECORDS MAINTAINED IN THE SYSTEM, INCLUDING CATEGORIES OF USERS AND THE PURPOSES OF SUCH USES:

The Office uses these records to maintain a record of agents of online service providers who should receive any notification of a claimed infringement which may afford a service provider limited liability under the copyright law.

POLICIES AND PRACTICES FOR STORING, RETRIEVING, ACCESSING, RETAINING, AND DISPOSING OF RECORDS IN THE SYSTEM:

STORAGE AND RETRIEVABILITY:

Binders in the Public Information Office in the Information and Reference Division in the Copyright Office, Library of Congress. Also available online on the Copyright Office's web page.

SAFEGUARDS:

These records are maintained by the Public Information Office, in a secure room monitored by authorized personnel and locked during nonworking hours. Hours of operation of the Public Information Office are 8:30 a.m.–5 p.m., Monday through Friday (except holidays).

RETENTION AND DISPOSAL:

Records are retained indefinitely.

SYSTEM MANAGER(S) AND ADDRESS:

Section Head, Information Section, Information and Reference Division, Copyright Office, Library of Congress, Washington, DC 20559–6000.

NOTIFICATION PROCEDURE:

Inquiries about the decisions in this file should be in writing addressed to the Supervisory Copyright Information Specialist, GC/I&R, PO Box 70400, Southwest Station, Washington, DC 20024.

RECORD ACCESS PROCEDURES:

Requests from individuals should be in writing addressed to the official designated under ''Notification Procedure.''

CONTESTING RECORD PROCEDURES:

See rules published in 37 CFR part 204.

RECORD SOURCE CATEGORIES:

Individuals to whom the party pertains.

CO–32

SYSTEM NAME:

Copyright Office Appeal Decisions.

SYSTEM LOCATION:

Copyright Office, Library of Congress, Washington, DC 20559–6000.

CATEGORIES OF INDIVIDUALS COVERED BY THE SYSTEM:

Applicants or their representatives who have appealed the Office's decision not to register claims submitted for copyright registration.

CATEGORIES OF RECORDS IN THE SYSTEM:

Included in this file are: (1) Copies of letters written by designated Examining Division personnel who review decisions to refuse to register a claim after the applicant or his or her representative has filed a petition for reconsideration of the Examining Division's initial denial of registration; and (2) copies of the final decisions issued by the Copyright Office Appeals Board after reexamination of an applicant's file upon a second request for reconsideration of the Office's refusal to register a claim.

AUTHORITY FOR MAINTENANCE OF THE SYSTEM:

17 U.S.C. 701, 705.

ROUTINE USES OF RECORDS MAINTAINED IN THE SYSTEM, INCLUDING CATEGORIES OF USERS AND THE PURPOSES OF SUCH USES:

The Office uses these records to maintain a record of decisions made by the Examining Division and the Copyright Office Appeals Board when an applicant seeks reconsideration of the Office?s refusal to register his or her claims to copyright.

POLICIES AND PRACTICES FOR STORING, RETRIEVING, ACCESSING, RETAINING, AND DISPOSING OF RECORDS IN THE SYSTEM:

STORAGE:

Binders in the Public Information Office in the Information and Reference Division in the Copyright Office, Library of Congress.

RETRIEVABILITY:

Documents are maintained in two categories, the first being Examining Division responses to initial requests for reconsideration of a refusal to register a claim, and the second being the Appeals Board's final decisions upon a second request for reconsideration of a claim. Each set of documents is retained in chronological order by the date of the correspondence in which the Office sends responses to the applicant or his or her agent.

SAFEGUARDS:

These records are maintained in the Public Information Office, a room monitored by authorized personnel and locked during nonworking hours. Hours of operation of the Public Information Office are 8:30 a.m.–5p.m., Monday through Friday (except holidays).

RETENTION AND DISPOSAL:

Records are retained indefinitely.

SYSTEM MANAGER(S) AND ADDRESS:

Section Head, Information Section, Information and Reference Division, Copyright Office, Library of Congress, Washington, DC 20559–6000.

NOTIFICATION PROCEDURE:

Inquiries about the decisions in this file should be in writing addressed to the Supervisory Copyright Information Specialist, GC/I&R, PO Box 70400, Southwest Station, Washington, DC 20024.

RECORD ACCESS PROCEDURES:

Requests from individuals should be in writing addressed to the official designated under ''Notification Procedure.''

CONTESTING RECORD PROCEDURES:

See rules published in 37 CFR part 204.

RECORD SOURCE CATEGORIES:

Individuals to whom the record pertains, and Copyright Office records.

Marilyn J. Kretsinger,

Assistant General Counsel.

[FR Doc. 99–25449 Filed 10–5–99; 8:45 am]

BILLING CODE 1410–30–P

MEDICARE PAYMENT ADVISORY COMMISSION

Commission Meeting

AGENCY: Medicare Payment Advisory Commission.

ACTION: Notice of meeting.

SUMMARY: The Commission will hold its next public meeting on Thursday, October 14, 1999 and Friday, October 15, 1999 at the Embassy Suites Hotel, 1250 22nd Street, NW, Washington, DC. The meeting is tentatively scheduled to begin at 10:00 a.m. on October 14, and 9:00 a.m. on October 15.

The Commission will discuss Medicare survey and certification issues, PRO 6th scope of work, mechanisms for improving and safeguarding quality, ESRD quality issues, outpatient therapy services, home health, prospective payment systems for rehabilitation and long-term hospitals, BBA impact on SNF utilization patterns, geographic variation in Medicare fee-for-service spending and payments to Medicare+Choice plans, payment adequacy for hospital services, DSH payments, APC systems for hospital outpatient departments, and payments to teaching hospitals.

Agendas will be mailed on Monday, October 4, 1999. The final agenda will be available on the Commission's website (www.MedPAC.gov).

ADDRESSES: MedPAC's address is: 1730 K Street, NW, Suite 800, Washington, DC 20006. The telephone number is (202) 653–7220.

FOR FURTHER INFORMATION CONTACT: Diane Ellison, Office Manager, (202) 653–7220.

SUPPLEMENTARY INFORMATION: If you are not on the Commission's mailing list and wish to receive an agenda, please call (202) 653–7220.

Murray N. Ross,

Executive Director.

[FR Doc. 99–26031 Filed 10–5–99; 8:45 am]

BILLING CODE 6820–BW–M

NATIONAL CREDIT UNION ADMINISTRATION

Notice of Meetings; Sunshine Act

TIME AND DATE: 1:30 p.m., Wednesday, October 6, 1999.

PLACE: Board Room, 7th Floor, Room 7047, 1775 Duke Street, Alexandria, Virginia 22314–3428.

STATUS: Open.

MATTERS TO BE CONSIDERED:

1. Final Rule: Amendments to Part 741, NCUA's Rules and Regulations, Insurance Premium and One Percent Deposit.

2. National Credit Union Share Insurance Fund (NCUSIF) Dividend for 1999 & NCUSIF Insurance Premium for 2000.

3. Final Rule: Amendment to Part 701, NCUA's Rules and Regulations, Statutory Liens.

4. Appeal from a Federal Credit Union of the Regional Director's Denial of a Field of Membership Expansion Request.

5. Notice of Changes to Federal Credit Union Bylaws.

6. Proposed Rule: Amendment to Part 714, NCUA's Rules and Regulations, Leasing.

7. Proposed Rule: Amendments to Parts 724 and 745, NCUA's Rules and Regulations, Individual Retirement Accounts in Several U.S. Territories and Possessions.

8. Personal Computer Procurement for FY 2000.

RECESS: 2:45 p.m.

TIME AND DATE: 3:00 p.m., Wednesday, October 6, 1999.

PLACE: Board Room, 7th Floor, Room 7047, 1775 Duke Street, Alexandria, Virginia 22314–3428.

STATUS: Closed.

MATTERS TO BE CONSIDERED:

1. Field of Membership Appeal. Closed pursuant to exemption (8).

2. Modification of NCUA's Indemnification Policy. Closed pursuant to exemptions (2) and (6).

FOR FURTHER INFORMATION CONTACT: Becky Baker, Secretary of the Board, Telephone (703) 518–6304.

Becky Baker,

Secretary of the Board.

[FR Doc. 99–26166 Filed 10–4–99; 12:08 pm]

BILLING CODE 7535–01–M

NATIONAL FOUNDATION ON THE ARTS AND THE HUMANITIES

National Endowment for the Arts

Combined Arts Advisory Panel

Pursuant to Section 10(a)(2) of the Federal Advisory Committee Act (Public Law 92–463), as amended, notice is hereby given that a meeting of the Combined Arts Advisory Panel, Opera section (Heritage & Preservation, Education and Access categories), to the National Council on the Arts will be held from October 26–27, 1999 in Room 716 at the Nancy Hanks Center, 1100 Pennsylvania Avenue, NW, Washington, DC, 20506. The Panel will meet from 9:00 a.m. to 6:30 p.m. on October 26th and from 9:00 a.m. to 4:00 p.m. on October 27th. A portion of this meeting, from 1:30 p.m. to 2:30 p.m. on October 27th, will be open to the public for policy discussion.

The remaining portions of this meeting, from 9:00 a.m. to 6:30 p.m. on October 26th, and from 9:00 a.m. to 1:30 p.m. and 2:30 p.m. to 4:00 p.m. on October 27th, are for the purpose of Panel review, discussion, evaluation, and recommendation on application for financial assistance under the National Foundation on the Arts and the Humanities Act of 1965, as amended, including information given in confidence to the agency by grant applicants. In accordance with the determination of the Chairman of May 12, 1999, these sessions will be closed to the public pursuant to (c)(4)(6) and (9)(B) of section 552b of Title 5, United States Code.

Any person may observe meetings, or portions thereof, of advisory panels which are open to the public, and, if time allows, may be permitted to participate in the panel's discussions at the discretion of the panel chairman and with the approval of the full-time Federal employee in attendance.

If you need special accommodations due to a disability, please contact the Office of AccessAbility, National Endowment for the Arts, 1100 Pennsylvania Avenue, NW, Washington, DC 20506, 202/682–5532, TDY–TDD 202/682–5496, at least seven (7) days prior to the meeting.

Further information with reference to this meeting can be obtained from Ms. Kathy Plowitz-Worden, Office of Guidelines & Panel Operations, National Endowment for the Arts, Washington, DC, 20506, or call 202/682–5691.

Dated: September 30, 1999.

Kathy Plowitz-Worden,

Panel Coordinator, Panel Operations, National Endowment for the Arts.

[FR Doc. 99–25927 Filed 10–5–99; 8:45 am]

BILLING CODE 7537–01–M

NATIONAL SCIENCE FOUNDATION

Special Emphasis Panel in Biological Sciences: Notice of Meeting

In accordance with the Federal Advisory Committee Act (Pub. L. 92–463, as amended), the National Science Foundation announces the following meeting:

Name: Special Emphasis Panel in Biological Sciences (#1754).

Date and Time: October 7, 1999, 8 a.m.–5 p.m. through October 9, 1999, 8 a.m.–Adjourn.

Place: National Science Foundation, 4201 Wilson Blvd, Room 1295, Arlington, VA.

Type of meeting: Closed.

Contact Person: Dr. Scott L. Collins, Program Officer or Mr. Aaron Kinchen, Senior Program Assistant, Ecological Studies, Room 640N, National Science Foundation, 4201 Wilson Boulevard, Arlington, Virginia. 22230. (703) 306–1479.

Minutes: May be obtained from the contact person listed above.

Purpose of Meeting: To provide advice and recommendations concerning proposals to the National Science Foundation (NFS) for financial support.

Agenda: To review and evaluate proposals submitted in response to the Ecological Studies Ecology Program Solicitation (99–2).

Reason for Closing: The proposals being reviewed include information of a proprietary or confidential nature, including technical information; financial data, such as salaries; and personal information concerning individuals associated with the proposals. These matters are exempt under 5 U.S.C. 552b (c), (4) and (6) of the Government in the Sunshine Act.

Dated: September 30, 1999.

Karen J. York,

Committee Management Officer.

[FR Doc. 99–26002 Filed 10–5–99; 8:45 am]

BILLING CODE 7555–01–M

NATIONAL SCIENCE FOUNDATION

Special Emphasis Panel in Biological Sciences: Notice of Meeting

In accordance with the Federal Advisory Committee Act (Pub. L. 92–463, as amended), the National Science Foundation announces the following meeting:

Name: Special Emphasis Panel in Biological Sciences (#1754).

Date and Time: October 8, 1999, 8 a.m.–5 p.m. and October 9, 1999, 8 a.m.–Adjourn.

Place: National Science Foundation, 4201 Wilson Boulevard, Room 970, Arlington, VA 22230.

Type of Meeting: Closed.

Contact Person: Dr. Penelope Firth or Dr. Edward T. Elliott, Program Officers, Ecological Studies, Room 640N, National Science Foundation, 4201 Wilson Blvd. Arlington, Virginia 22230. (703) 306–1479.

Minutes: May be obtained from the contact person listed above.

Purpose of Meeting: To provide advice and recommendations concerning proposals to the National Science Foundation (NSF) for financial support.

Agenda: To review and evaluate proposals submitted in response to the Ecological Studies Ecosystem Studies Program Solicitation (99–2).

Reason for Closing: The proposals being reviewed include information of a proprietary or confidential nature, including technical information; financial data, such as salaries; and personal information concerning individuals associated with the proposals. These matters are exempt under 5 U.S.C. 552b(c), (4) and (6) of the Government in the Sunshine Act.

Dated: September 30, 1999.

Karen J. York,

Committee Management Officer.

[FR Doc. 99–26003 Filed 10–5–99; 8:45 am]

BILLING CODE 7555–01–M

NATIONAL SCIENCE FOUNDATION

Special Emphasis Panel in Chemical and Transport Systems; Notice of Meeting

In accordance with the Federal Advisory Committee Act (Pub. L. 92–463, as amended), the National Science Foundation announces the following meeting:

Name: Special Emphasis Panel in Chemical and Transport Systems (1190).

Date and Time: November 10, 1999, 8 a.m. to 5 p.m.

Place: National Science Foundation, 4201 Wilson Boulevard, Room 130, Arlington, VA 22230, (703) 306–1371.

Type of Meeting: Closed.

Contact Person: Dr. Geoffrey Prentice, Program Director, Division of Chemical and Transport Systems (CTS), Room 525, (703) 306–1371.

Purpose of Meeting: To provide advice and recommendations concerning proposals submitted to NSF for financial support.

Agenda: To review and evaluate nominations for the FY99 NSF/EPA TSE F1 Panel proposals as part of the selection process for awards.

Reasons for Closing: The proposals being reviewed include information of a proprietary or confidential nature, including technical information; financial data, such as salaries and personal information concerning individuals associated with the proposals. These matters are exempt under 5 U.S.C. 552b(c) (4) and (6) of the Government in the Sunshine Act.

Dated: September 30, 1999.

Karen J. York,

Committee Management Officer, Division of Human Resource Management.

[FR Doc. 99–25986 Filed 10–5–99; 8:45 am]

BILLING CODE 7555–01–M

NATIONAL SCIENCE FOUNDATION

Special Emphasis Panel in Chemical and Transport Systems; Notice of Meeting

In accordance with the Federal Advisory Committee Act (Pub. L. 92–463, as amended), the National Science Foundation announces the following meeting:

Name: Special Emphasis Panel in Chemical and Transport Systems (1190).

Date and Time: October 18, 1999, 8 a.m. to 5 p.m.

Place: National Science Foundation, 4201 Wilson Boulevard, Room 320, Arlington, VA 22230, (703) 306–1371.

Type of Meeting: Closed.

Contact Person: Dr. Thomas Chapman, Program Director, Division of Chemical and Transport Systems (CTS), Room 525, (703) 306–1371.

Purpose of Meeting: To provide advice and recommendations concerning proposals submitted to NSF for financial support.

Agenda: To review and evaluate nominations for the FY99 NSF/EPA TSE D1 Panel proposals as part of the selection process for awards.

Reason for Closing: The proposals being reviewed include information of a proprietary or confidential nature, including technical information; financial data, such as salaries and personal information concerning individuals associated with the proposals. These matters are exempt under 5 U.S.C. 552b(c) (4) and (6) of the Government in the Sunshine Act.

Dated: September 30, 1999.

Karen J. York,

Committee Management Officer, Division of Human Resource Management.

[FR Doc. 99–25987 Filed 10–5–99; 8:45 am]

BILLING CODE 7555–01–M

NATIONAL SCIENCE FOUNDATION

Special Emphasis Panel in Chemical and Transport Systems; Notice of Meeting

In accordance with the Federal Advisory Committee Act (Pub. L. 92–463, as amended), the National Science Foundation announces the following meeting:

Name: Special Emphasis Panel in Chemical and Transport Systems (1190).

Date and Time: October 19, 1999, 8:15 a.m. to 5 p.m.

Place: National Science Foundation, 4201 Wilson Boulevard, Room 320, Arlington, VA 22230, (703) 306–1371.

Type of Meeting: Closed.

Contact Person: Dr. Robert M. Wellek, Deputy Division Director, Division of Chemical and Transport Systems (CTS), Room 525, (703) 306–1371.

Purpose of Meeting: To provide advice and recommendations concerning proposals submitted to NSF for financial support.

Agenda: To review and evaluate nominations for the FY99 NSF/EPA TSE D2 Panel proposals as part of the selection process for awards.

Reason for Closing: The proposals being reviewed include information of a proprietary or confidential nature, including technical information; financial data, such as salaries and personal information concerning individuals associated with the proposals. These matters are exempt under 5 U.S.C. 552b(c) (4) and (6) of the government in the Sunshine Act.

Dated: September 30, 1999.

Karen J. York,

Committee Management Officer, Division of Human Resource Management.

[FR Doc. 99–25988 Filed 10–5–99; 8:45 am]

BILLING CODE 7555–01–M

NATIONAL SCIENCE FOUNDATION

Special Emphasis Panel in the Division of Chemistry; Notice of Meetings

This notice is being published in accord with the Federal Advisory Committee Act (Pub. L. 92–463, as amended). During the period November 15 through November 18, the Special Emphasis Panel in the Division of Chemistry (1191) will be holding panel meetings to review and evaluate research proposals. The dates and types of proposals being reviewed are:

Dates of Meetings:

11/15/99–11/16/99
11/15/99–11/16–17/99
11/15/99–11/16/99
11/17/99–11/18/99

Types of Proposal:

Physical Chemistry (CAREER)
Inorganic Chemistry (CAREER)
Organic Chemistry (CAREER)
Analytical and Surface Chemistry (CAREER)

Times: 8:30 to 5:00 p.m. each day.

Place: National Science Foundation, 4201 Wilson Blvd., Arlington, VA.

Type of Meetings: Closed.

Contact Person: Dr. Margaret Cavanaugh, Program Director, Inorganic, Bioinorganic and Organometallic Chemistry, Room 1055, National Science Foundation, 4201 Wilson Blvd., Arlington, Va. 22230, telephone (703) 306–1842.

Purpose of Meetings: To provide advice and recommendations concerning proposals submitted to NSF for financial support.

Agenda: To review and evaluate proposals submitted to the Division of Chemistry as part of the selection process for awards.

Reason for Closing: The proposals being reviewed include information of a proprietary or confidential nature, including technical information; financial data, such as salaries, and personal information concerning individuals associated with the proposals. These matters are exempt under 5 USC 552b(c) (4) and (6) of the Government in the Sunshine Act.

Dated: September 30, 1999.

Karen York,

Committee Management Officer.

[FR Doc. 99–26008 Filed 10–5–99; 8:45 am]

BILLING CODE 7555–01–M

NATIONAL SCIENCE FOUNDATION

Special Emphasis Panel in Computer-Communications Research; Notice of Meeting

In accordance with the Federal Advisory Committee Act (Pub. L. 92-463, as amended), the National Science Foundation announces the following meeting:

Name: Special Emphasis Panel in Computer-Communications Research (1192).

Date: October 22, 1999.

Time: 8:30 a.m.–5 p.m.

Place: National Science Foundation, 4201 Wilson Boulevard, Room 310, Arlington, VA 22230.

Type of Meeting: Closed.

Contact Person(s): Mukesh Singhal, Program Director, Operating System and Compilers, CISE/CCR, Room 1145, National Science Foundation, 4201 Wilson Boulevard, Arlington, Virginia 22230, (703) 306-1918.

Purpose of Meeting: To provide advice and recommendations concerning proposals submitted to NSF for financial support.

Agenda: To review and evaluate Communications Research proposals as a part of the selection process for awards.

Reason for Closing: The proposals being reviewed include information of a proprietary or confidential nature, including technical information, financial data, such as salaries, and personal information concerning individuals associated with the proposals. These matters are within exemptions (4) and (6) of 5 U.S.C. 552b(c), of the Government in the Sunshine Act.

Dated September 30, 1999.

Karen J. York,

Committee Management Officer.

[FR Doc. 99–26000 Filed 10–5–99; 8:45 am]

BILLING CODE 7555–01–M

NATIONAL SCIENCE FOUNDATION

Special Emphasis Panel in Design, Manufacture, and Industrial Innovation; Notice of Meeting

In accordance with the Federal Advisory Committee Act (Pub. L. 92–463, as amended), the National Science Foundation announces the following meeting:

Name: Special Emphasis Panel in Design, Manufacture, and Industrial Innovation (1194).

Date and Time: November 4, 9, and 19, 8 a.m.–5:30 p.m.

Place: Rooms 830, 630, and 1120, National Science Foundation, 4201 Wilson Boulevard, Arlington, VA 22230.

Type of Meeting: Closed.

Contact Person: Dr. Delcie Durham, Program Director, Material Processes and Manufacturing, Dr. George Hazelrigg, Program Director, Design and Integration Engineering Program, Dr. K.P. Rajurkar, Program Manager, Manufacturing Machines and Equipment Program, Dr. Lawrence Seiford, Program Director, Operations Research and Production Systems Program, National Science Foundation, 4201 Wilson Boulevard, Arlington, VA 22230, Telephone (703) 306–1330.

Purpose of Meeting: To provide advice and recommendations concerning proposals submitted to the NSF for financial support.

Agenda: To review and evaluate CAREER proposals as part of the selection process for awards.

Reason for Closing: The proposals being reviewed include information of proprietary or confidential nature, including technical information, financial data such as salaries, and personal information concerning individuals associated with the proposals. These matters that are exempt under 5 U.S.C. 552b(c)(4) and (6) of the Government in the Sunshine Act.

Dated: September 30, 1999.

Karen J. York,

Committee Management Officer.

[FR Doc. 99–26006 Filed 10–5–99; 8:45 am]

BILLING CODE 7555–01–M

NATIONAL SCIENCE FOUNDATION

Advisory Panel for Developmental Mechanisms; Notice of Meeting

In accordance with the Federal Advisory Committee Act (Pub. L. 92–463, as amended), the National Science Foundation announces the following meeting.

Name: Advisory Panel for Developmental Mechanisms (1141).

Date and Time: October 20–22, 1999, 8:30 a.m. to 5:00 p.m.

Place: Room 390, National Science Foundation, 4201 Wilson Boulevard, Arlington, VA 22230.

Type of Meeting: Part-Open.

Contact Persons: Dr. Judith Plesset and Dr. Susan Singer, Program Directors, Developmental Mechanisms, Room 685, National Science Foundation, 4201 Wilson Boulevard, Arlington, Virginia 22230. Telephone (703) 306–1417.

Purpose of Meeting: To provide advice and recommendations concerning proposals submitted to NSF for financial support.

Minutes: May be obtained from the contact persons listed above.

Agenda: Open Session: October 21, 1999; 1 p.m. to 2 p.m., to discuss goals and assessment procedures. Closed Session: October 20, 1999; 9 a.m. to 5 p.m.; October 21, 1999; 8:30 a.m. to 1 p.m., 2 p.m. to 5 p.m.; October 22, 1999; 8:30 a.m. to 12 p.m. To review and evaluate Developmental Mechanisms proposals as part of the selection process for awards.

Reason for Closing: The proposals being reviewed include information of a proprietary or confidential nature, including technical information; financial data, such as salaries; and personal information concerning individuals associated with the proposals. These matters are exempt under 5 U.S.C. 552b (c), (4) and (6) of the Government in the Sunshine Act.

Dated: September 30, 1999.

Karen York,

Committee Management Officer, Division of Human Resource Management.

[FR Doc. 99–26001 Filed 10–5–99; 8:45 am]

BILLING CODE 7555–01–M

NATIONAL SCIENCE FOUNDATION

Proposal Review Panel in Earth Sciences; Notice of Meeting

In accordance with the Federal Advisory Committee Act (Pub. L. 92–463, as amended), the National Science Foundation announces the following meeting:

Name: Proposal Review Panel in Earth Sciences (1569).

Date and Time: October 28–30, 1999, 8:00 a.m. to 6 p.m.

Place: UNAVCO Headquarters, UCAR, Foothills Lab #2, Room 1003, 3340 Mitchell Lane, Boulder, CO 90301.

Type of Meeting: Closed.

Contact Person: Dr. Daniel F. Weill, Program Director, Instrumentation & Facilities Program, Division of Earth Sciences, Room 785, National Science Foundation 4201 Wilson Blvd., Arlington, VA 22230; Telephone: (703) 306–1558.

Purpose of Meeting: To provide advice and recommendations concerning proposals submitted to NSF for financial support.

Agenda: To review and evaluate Instrumentation & Facilities proposals as part of the selection process for awards.

Reason for Closing: The proposals being reviewed include information of a proprietary or confidential nature, including technical information; financial data, such as salaries; and personal information concerning individuals associated with the proposals. These matters are exempt under 5 U.S.C. 552b(c), (4) and (6) of the Government in the Sunshine Act.

Dated: September 30, 1999.

Karen J. York,

Committee Management Officer.

[FR Doc. 99–26004 Filed 10–5–99; 8:45 am]

BILLING CODE 7535–01–M

NATIONAL SCIENCE FOUNDATION

Special Emphasis Panel in Information and Intelligent Systems; Notice of Meeting

In accordance with the Federal Advisory Committee Act (Pub. L. 92–463, as amended), the National Science Foundation announces the following meeting:

Name: Special Emphasis Panel in Information and Intelligent Systems (1200).

Date and Time: November 1–4, 1999, 8:30 a.m. to 5 p.m.

Place: The River Inn, 924 Twenty-Fifth Street, NW, Washington, DC 20037.

Type of Meeting: Closed.

Contact Person: Dr. Ephraim Glinert, Acting Deputy Division Director, National Science Foundation, 4201 Wilson Boulevard, Arlington, VA 22230, (703) 306–1928.

Purpose of Meeting: To provide advice and recommendations concerning proposals submitted to NSF for financial support.

Agenda: To review and evaluate Information and Data Management Program CAREER proposals as part of the selection process for awards.

Reason for Closing: The proposals being reviewed include information of a proprietary or confidential nature, including technical information; financial data, such as salaries; and personal information concerning individuals associated with the proposals. These matters are exempt under 5 U.S.C. 552b(c) (4) and (6) of the government in the Sunshine Act.

Dated: September 30, 1999.

Karen J. York,

Committee Management Officer.

[FR Doc. 99–25989 Filed 10–5–99; 8:45 am]

BILLING CODE 7555–01–M

NATIONAL SCIENCE FOUNDATION

Special Emphasis Panel in Information and Intelligent Systems; Notice of Meeting

In accordance with the Federal Advisory Committee Act (Pub. L. 92–463, as amended), the National Science Foundation announces the following meeting:

Name: Special Emphasis Panel in Information and Intelligent Systems (1200).

Date and Time: October 31-November 2, 1999 8:30 a.m.–5 p.m.

Place: National Science Foundation, 4201 Wilson Boulevard, Arlington, VA 22230.

Type of Meeting: Closed.

Contact Person: Dr. Ephraim Glinert, Deputy Division Director, National Science Foundation, 4201 Wilson Boulevard, Arlington, VA 22230, (703) 306–1928.

Purpose of Meeting: To provide advice and recommendations concerning proposals submitted to NSF for financial support.

Agenda: To review and evaluate Knowledge and Cognitive Systems CAREER

proposals as part of the selection process for awards.

Reason for Closing: The proposals being reviewed include information of a proprietary or confidential nature, including technical information, financial data, such as salaries; and personal information concerning individuals associated with the proposals. These matters are exempt under 5 U.S.C. 552b(c), (4) and (6) of the Government in the Sunshine Act.

Dated: September 30, 1999.

Karen J. York,

Committee Management Officer.

[FR Doc. 99–25990 Filed 10–5–99; 8:45 am]

BILLING CODE 7555–01–M

NATIONAL SCIENCE FOUNDATION

Special Emphasis Panel in Information, and Intelligent Systems; Notice of Meeting

In accordance with the Federal Advisory Committee Act (Pub. L. 92–463, as amended), the National Science Foundation announces the following meeting:

Name: Special Emphasis Panel in Information and Intelligent Systems (1200).

Date and Time: October 21–22, 1999, 8:30 a.m.–5 p.m.

Place: National Science Foundation, 4201 Wilson Boulevard, Arlington, VA 22230.

Type of Meeting: Closed.

Contact Person: Dr. Ephraim Gilnert, Acting Deputy Division Director National Science foundation 4201 Wilson Boulevard Arlington, VA 22230, (703) 306–1928.

Purpose of Meeting: to provide advice and recommendations concerning proposals submitted to NSF for financial support.

Agenda: to review and evaluate Computation and Social Systems Program CAREER proposals as part of the selection process for awards.

Reason for Closing: The proposals being reviewed include information of a proprietary or confidential nature, including technical information, financial data, such as salaries; and personal information concerning individuals associated with the proposals. These matters are exempt under 5 U.S.C. 552b(c), (4) and (6) of the Government in the Sunshine Act.

Dated: September 30, 1999.

Karen J. York,

Committee Management Officer.

[FR Doc. 99–25991 Filed 10–5–99; 8:45 am]

BILLING CODE 7555–01–M

NATIONAL SCIENCE FOUNDATION

Special Emphasis Panel in Information, Robotics, and Intelligent Systems; Notice of Meeting

In accordance with the Federal Advisory Committee Act (Pub. L. 92–463, as amended), the National Science Foundation announces the following meeting:

Name: Special Emphasis Panel in Information and Intelligent Systems (1200).

Date and Time: October 17–19, 1999 8:30 a.m.–5 p.m.

Place: National Science Foundation, 4201 Wilson Boulevard, Arlington, VA 22230.

Type of Meeting: Closed.

Contact Person: Dr. Ephraim Glinert, Acting Deputy Division Director, National Science Foundation, 4201 Wilson Boulevard, Arlington, VA 22230, (703) 306–1928.

Purpose of Meeting: To provide advice and recommendations concerning proposals submitted to NSF for financial support.

Agenda: To review and evaluate Human Computer Interaction CAREER proposals as part of the selection process for awards.

Reason for Closing: The proposals being reviewed include information of a proprietary or confidential nature, including technical information, financial data, such as salaries; and personal information concerning individuals associated with the proposals. These matters are exempt under 5 U.S.C. 552b(c), (4) and (6) of the Government in the Sunshine Act.

Dated: September 30, 1999.

Karen J. York,

Committee Management Officer.

[FR Doc. 99–25992 Filed 10–5–99; 8:45 am]

BILLING CODE 7555–01–M

NATIONAL SCIENCE FOUNDATION

Special Emphasis Panel in Materials Research; Notice of Meeting

In accordance with the Federal Advisory Committee Act (Pub. L. 92–463, as amended), the National Science Foundation announces the following meeting:

Name: Special Emphasis Panel in Materials Research (DMR) #1203.

Date and Time: November 5, 1999, 8:15 a.m.–4:30 p.m.

Place: National Science Foundation, 4201 Wilson Blvd, Room 1060, Arlington, VA 22230.

Type of Meeting: Closed.

Contact Person: Dr. Andrew J. Lovinger, Program Director, Polymers Program, Division of Materials Research, Room 1065, National Science Foundation, Arlington, VA 22230. (703) 306–1839.

Purpose of Meeting: To provide advice and recommendations concerning proposals submitted to NSF for financial support.

Agenda: Review and evaluate proposals as part of the selection process to determine finalists considered for FY2000 Faculty Early Career Development (CAREER) Proposals by the Polymers Program.

Reason for Closing: The proposals being reviewed include information of a proprietary or confidential nature, including technical information; financial data, such as salaries; and personal information concerning individuals associated with the proposals. These matters are exempt under 5 U.S.C. 552b (c), (4) and (6) of the Government in the Sunshine Act.

Dated: September 30, 1999.

Karen J. York,

Committee Management Officer.

[FR Doc. 99–25993 Filed 10–5–99; 8:45 am]

BILLING CODE 7555–01–M

NATIONAL SCIENCE FOUNDATION

Special Emphasis Panel in Materials Research; Notice of Meeting

In accordance with the Federal Advisory Committee Act (Pub. L. 92–363 as amended), the National Science Foundation announces the following meeting:

Name: Special Emphasis Panel in Materials Research (1203).

Date and Time: November 3–5, 1999: 8:30 a.m.–5 p.m.

Place: National Science Foundation; 4201 Wilson Blvd., Arlington, VA; Rooms 340, 360, 380, 390 and 1235.

Type of Meeting: Closed.

Contact Person: Dr. Ulrich Strom, Program Director, Materials Research Science and Engineering Centers Program, Room 1065, National Science Foundation, Arlington, VA 22230. (703) 306–1832.

Purpose of Meetings: To provide advice and recommendations concerning proposals submitted to NSF for financial support.

Agenda: Review and evaluate proposals as part of the selection process to determine finalists considered for full Proposals for the Materials Research Science and Engineering Centers Program awards.

Reason for Closing: The proposals being reviewed include information of a proprietary or confidential nature, including technical information, financial data such as salaries, and personal information concerning individuals associated with the proposals. These matters are exempt under 5 U.S.C. 552b. (c) (4) and (6) of the Government in the Sunshine Act.

Dated: September 30, 1999.

Karen J. York,

Committee Management Officer.

[FR Doc. 99–25994 Filed 10–5–99; 8:45 am]

BILLING CODE 7555–01–M

NATIONAL SCIENCE FOUNDATION

Special Emphasis Panel in Materials Research; Notice of Meeting

In accordance with the Federal Advisory Committee Act (Pub. L. 92–463 as amended), the National Science Foundation announces the following meeting.

Name: Special Emphasis Panel in Materials Research (1203).

Date and Time: November 2, 1999; 8 a.m.–5 p.m.

Place: National Science Foundation; 4201 Wilson Blvd., Room 1020, Arlington, VA 22230.

Type of Meeting: Closed.

Contact Person: Dr. LaVerne D. Hess, Program Director, Electronic Materials Program, Division of Materials Research, Room 1065, National Science Foundation, Arlington, VA 22230. (703) 306–1837.

Purpose of Meeting: To provide advice and recommendations concerning proposals submitted to NSF for financial support.

Agenda: Review and evaluate proposals as part of the selection process to determine finalists considered for FY2000 Faculty Early Career Development (CAREER) Proposals by the Electronic Materials Program.

Reasons for Closing: The proposals being reviewed include information of a proprietary or confidential nature, including technical information, financial data such as salaries, and personal information concerning individuals associated with the proposals. These matters are exempt under 5 U.S.C. 552b.(c) (4) and (6) of the Government in the Sunshine Act.

Dated: September 30, 1999.

Karen J. York,

Committee Management Officer.

[FR Doc. 99–25995 Filed 10–5–99; 8:45 am]

BILLING CODE 7555–01–M

NATIONAL SCIENCE FOUNDATION

Special Emphasis Panel in Materials Research; Notice of Meetings

In accordance with the Federal Advisory Committee Act (Pub. L. 92–463 as amended), the National Science Foundation announces the following meetings:

Name: Special Emphasis Panel in Materials Research (DMR) #1203.

Dates/Times: October 20, 1999 (7:30 p.m.–10 p.m.); October 21 (8 a.m.–5:15 p.m.) & October 22, (8 a.m.–3 p.m.).

Place: National Institute of Standards and Technology, 100 Bureau Drive, Stop 8562, Gaithersburg, MD 20899–8562.

Type of Meeting: Closed.

Contact Person: Dr. Guebre X. Tessema, Program Director, National Facilities and Instrumentation Program, Division of Materials Research, Room 1065, National Science Foundation, Arlington, VA 22230. Telephone (703) 306–1817.

Purpose of Meetings: To provide advice and recommendations concerning a proposal submitted to NSF for financial support.

Agenda: Review and evaluate a proposal entitled Center for High Resolution Neutron Scattering for a National Facilities and Instrumentation Program award.

Reason for closing: The proposal being reviewed included information of a proprietary or confidential nature, including technical information, financial data such as salaries, and personal information concerning individuals associated with the proposal. These matters are exempt under 5 U.S.C. 552b.(c) (4) and (6) of the Government in the Sunshine Act.

Dated: September 30, 1999.

Karen J. York,

Committee Management Officer.

[FR Doc. 99–25996 Filed 10–5–99; 8:45 am]

BILLING CODE 7555–01–M

NATIONAL SCIENCE FOUNDATION

Special Emphasis Panel in Materials Research; Notice of Meeting

In accordance with the Federal Advisory Committee Act (Pub. L. 92–463 as amended), the National Science Foundation announces the following meeting:

Name: Special Emphasis Panel in Materials Research (1203).

Date and Time: October 12, 1999: 8:15 a.m.–4:30 p.m.

Place: National Science Foundation; 4201 Wilson Blvd., Room 340, Arlington, VA 22230.

Type of Meeting: Closed.

Contact Person: Dr. H. Hollis Wickman, Program Director, Condensed Matter Physics Program, Division of Materials Research, Room 1065, National Science Foundation, Arlington, VA 22230. (703) 306–1816.

Purpose of Meeting: To provide advice and recommendations concerning proposals submitted to NSF for financial support.

Agenda: Review and evaluate proposals as part of the selection process to determine finalists considered for FY2000 Faculty Early Career Development (CAREER) Proposals for the Condensed Matter Physics Program awards.

Reason for Closing: The proposals being reviewed include information of a proprietary or confidential nature, including technical information, financial data such as salaries, and personal information concerning individuals associated with the proposals. These matters are exempt under 5 U.S.C. 552b. (c)(4) and (6) of the Government in the Sunshine Act.

Dated: September 30, 1999.

Karen J. York,

Committee Management Officer.

[FR Doc. 99–25997 Filed 10–5–99; 8:45 am]

BILLING CODE 7555–01–M

NATIONAL SCIENCE FOUNDATION

Special Emphasis Panel in Materials Research; Notice of Meeting

In accordance with the Federal Advisory Committee Act (Pub. L. 92–463 as amended), the National Science Foundation announces the following meeting:

Name: Special Emphasis Panel in Materials Research (1203).

Date and Time: October 13, 1999: 9 a.m.–5 p.m.

Place: National Science Foundation; 4201 Wilson Blvd., Room 1060, Arlington, VA 22230.

Type of Meeting: Closed.

Contact Person: Dr. Liselotte J. Schioler, Program Director, Ceramics Program, Division of Materials Research, Room 1065, National Science Foundation , Arlington, VA 22230. (703) 306–1836.

Purpose of Meetings: To provide advice and recommendations concerning proposals submitted to NSF for financial support.

Agenda: Review and evaluate proposals as part of the selection process to determine finalists considered for Ceramic Program awards.

Reason for Closing: The proposals being reviewed include information of a proprietary or confidential nature, including technical information, financial data such as salaries, and personal information concerning individuals associated with the proposals. These matters are exempt under 5 U.S.C. 552b.(c) (4) and(6) of the Government in the Sunshine Act.

Dated: September 30, 1999.

Karen J. York,

Committee Management Officer.

[FR Doc. 99–25998 Filed 10–5–99; 8:45 am]

BILLING CODE 7555–01–M

NATIONAL SCIENCE FOUNDATION

Advisory Committee for Mathematical and Physical Sciences; Notice of Meeting

In accordance with the Federal Advisory Committee Act (Pub. L. 92–463, as amended), the National Science Foundation announces the following meeting:

Name: Advisory Committee for Mathematical and Physical Sciences (66).

Date and Time: November 4, 1999; 9 a.m.–5 p.m., November 5, 1999; 9 a.m.–3:30 p.m.

Place: IBM T.J. Watson Research Center, Route 134, Yorktown Heights, NY 10598.

Type of Meeting: Open.

Contact Person: Adriaan de Graaf, Executive Officer, Directorate for Mathematical and Physical Sciences, Room 105, National Science Foundation, 4201 Wilson Boulevard, Arlington, VA 22230. (703) 306–1800.

Minutes: May be obtained from the contact person listed above.

Purpose of Meeting: To provide advice and recommendations on the development of MPS science themes, and science and education in the international arena; provide advice on building the MPS intellectual core; advice on methods of achieving overall program excellence in MPS; and evaluate the Government Performance and Results Act (GPRA) FY 1999 Results Report.

Agenda:

November 4, 1999

AM—Introductory Remarks, Discussion of the MPS FY 1999 GPRA Results Report

PM—Discussion on Building the MPS Intellectual Core

November 5, 1999

AM—Discussion of MPS Science Themes, Discussion of MPS Science and Education in the International Arena

PM—Meeting Wrap-up/Future Business

Dated: September 30, 1999.

[FR Doc. 99–26007 Filed 10–5–99; 8:45 am]

BILLING CODE 7555–01–M

NATIONAL SCIENCE FOUNDATION

Special Emphasis Panel in Mathematical Sciences; Notice of Meeting

In accordance with the Federal Advisory Committee Act (Pub. L. 92–463, as amended), the National Science Foundation announces the following meeting:

Name: Special Emphasis Panel in mathematical Sciences (1204).

Date and Time: October 4 & 5, 1999.

Place: National Science Foundation.

Type of Meeting: Closed.

Contact Person: Hans Engler, Program Director, Applied Mathematics Program, or Joe Jenkins, Program Director, Analysis Program, Room 1025 National Science Foundation, 4201 Wilson Boulevard, Arlington, VA 22230, Telephone: (703) 306–1870.

Purpose of Meeting: To provide advice and recommendations concerning proposals submitted to NSF for financial support.

Agenda: To review and evaluate proposals concerning the Grants for Vertical Integration of Research and Education in the Mathematical Sciences (VIGRE) as part of the selection process for awards.

Reason for Closing: The proposals being reviewed include information of a proprietary of confidential nature, including technical information; financial data, such as salaries and personal information concerning individuals associated with the Proposals. These matters are exempt under 5 U.S.C. 552b(c)(4) and (6) of the Government in the Sunshine Act.

Dated: September 30, 1999.

Karen J. York,

Committee Management Officer.

[FR Doc. 99–25999 Filed 10–5–99; 8:45 am]

BILLING CODE 7555–01–M

NATIONAL SCIENCE FOUNDATION

Advisory Committee for Polar Programs: Notice of Meeting

In accordance with the Federal Advisory Committee (Pub. L. 92–463, as amended), the National Science Foundation announces the following meeting:

Name: Advisory Committee for Polar Programs (1130).

Date and Time: November 1, 1999—8:30 a.m. to 5 p.m, November 2, 1999—8:30 a.m. to 5 p.m.

Place: National Science Foundation, 4201 Wilson Blvd., Room 1235, Arlington, VA 22230.

Type of Meeting: Open.

Contact Person: Brenda Williams, Office of Polar Programs (OPP), National Science Foundation, 4201 Wilson Blvd., Suite 755, Arlington, VA 22230, (703) 306–1030.

Minutes: May be obtained from the contact person listed above.

Purpose of Meeting: To advise NSF on the impact of its policies, programs and activities on the polar research community; to provide advice to the Director of OPP on issues related to long range planning, and to form ad hoc sub-committees to carry out needed studies and tasks.

Agenda: Discussion of NSF-wide initiatives, long-range planning, and GPRA.

Dated: September 30, 1999.

Karen J. York,

Committee Management Officer.

[FR Doc. 99–26005 Filed 10–5–99; 8:45 am]

BILLING CODE 7555–01–M

NUCLEAR REGULATORY COMMISSION

[Docket Nos. 50–445 and 50–446]

TXU Electric Co.; Notice of Issuance of Amendments to Facility Operating Licenses

The U.S. Nuclear Regulatory Commission (Commission) has issued Amendment No. 72 to Facility Operating License No. NPF–87 and Amendment No. 72 to Facility Operating License No. NPF–89 issued to TXU Electric Company, which revised the Technical Specifications (TSs) for operation of the Comanche Peak Steam Electric Station (CPSES) located in Somervell County, Texas. The amendments are effective as of the date of issuance.

The amendments modified the rated thermal power (RTP), in paragraph 2.C.(1) of Facility Operating License No. NPF–89 (FOL NPF–89) for CPSES, Unit 2, from 3411 megawatts thermal (MWt) to 3445 MWt. The amendments also changed the TSs for CPSES, Units 1 and 2. The amendments changed TS 1.1 to increase the RTP to 3445 MWt for CPSES, Unit 2. In addition, the Allowable Values for the reactor trip setpoints for ''N–16 Overpower,'' and ''Power Range Neutron Flux—High'' in TS Table 3.3.1–1 are changed for CPSES, Unit 2 and TS 5.6.5b, ''Core Operating Limits Report (COLR),'' is changed to reflect appropriate, power-dependant, safety analysis assumptions and the updating of these assumptions in NRC staff-approved documents.

The application for the amendments complies with the standards and requirements of the Atomic Energy Act of 1954, as amended (the Act), and the Commission's rules and regulations. The Commission has made appropriate findings as required by the Act and the Commission's rules and regulations in 10 CFR Chapter I, which are set forth in the license amendment.

Notice of Consideration of Issuance of Amendments to Facility Operating Licenses and Opportunity for a Hearing in connection with this action was published in the **Federal Register** on May 10, 1999 (64 FR 25086). No request for a hearing or petition for leave to intervene was filed following this notice.

The Commission has prepared an Environmental Assessment related to the action and has determined not to prepare an environmental impact statement. Based upon the Environmental Assessment, the Commission has concluded that the issuance of the amendment will not have a significant effect on the quality of the human environment (64 FR 43762).

For further details with respect to the action see (1) the application for amendments dated December 21, 1998, as supplemented by letters dated April 23, May 14, July 9, August 13 (two letters), August 25, and September 10, 1999, (2) Amendment No. 72 to License No. NPF–87, (3) Amendment No. 72 to License No. NPF–89, (4) the Commission's related Safety Evaluation, and (5) the Commission's Environmental Assessment. All of these items are available for public inspection at the Commission's Public Document Room, the Gelman Building, 2120 L Street NW., Washington, DC, and at the local public document room located at the University of Texas at Arlington Library, Government Publications/Maps, 702 College, P. O. Box 19497, Arlington, Texas.

Dated at Rockville, Maryland, this 30th day of September, 1999.

For the Nuclear Regulatory Commission.

David H. Jaffe,

Senior Project Manager, Section 1, Project Directorate IV & Decommissioning, Division of Licensing Project Management, Office of Nuclear Reactor Regulation.

[FR Doc. 99–25975 Filed 10–5–99; 8:45 am]

BILLING CODE 7590–01–P

NUCLEAR REGULATORY COMMISSION

Biweekly Notice; Applications and Amendments to Facility Operating Licenses Involving No Significant Hazards Considerations

I. Background

Pursuant to Public Law 97–415, the U.S. Nuclear Regulatory Commission (the Commission or NRC staff) is

publishing this regular biweekly notice. Public Law 97–415 revised section 189 of the Atomic Energy Act of 1954, as amended (the Act), to require the Commission to publish notice of any amendments issued, or proposed to be issued, under a new provision of section 189 of the Act. This provision grants the Commission the authority to issue and make immediately effective any amendment to an operating license upon a determination by the Commission that such amendment involves no significant hazards consideration, notwithstanding the pendency before the Commission of a request for a hearing from any person.

This biweekly notice includes all notices of amendments issued, or proposed to be issued from September 11, 1999, through September 24, 1999. The last biweekly notice was published on September 22, 1999 (64 FR 51343).

Notice of Consideration of Issuance of Amendments to Facility Operating Licenses, Proposed no Significant Hazards Consideration Determination, and Opportunity for a Hearing

The Commission has made a proposed determination that the following amendment requests involve no significant hazards consideration. Under the Commission's regulations in 10 CFR 50.92, this means that operation of the facility in accordance with the proposed amendment would not (1) involve a significant increase in the probability or consequences of an accident previously evaluated; or (2) create the possibility of a new or different kind of accident from any accident previously evaluated; or (3) involve a significant reduction in a margin of safety. The basis for this proposed determination for each amendment request is shown below.

The Commission is seeking public comments on this proposed determination. Any comments received within 30 days after the date of publication of this notice will be considered in making any final determination.

Normally, the Commission will not issue the amendment until the expiration of the 30-day notice period. However, should circumstances change during the notice period such that failure to act in a timely way would result, for example, in derating or shutdown of the facility, the Commission may issue the license amendment before the expiration of the 30-day notice period, provided that its final determination is that the amendment involves no significant hazards consideration. The final determination will consider all public and State comments received before action is taken. Should the Commission take this action, it will publish in the **Federal Register** a notice of issuance and provide for opportunity for a hearing after issuance. The Commission expects that the need to take this action will occur very infrequently.

Written comments may be submitted by mail to the Chief, Rules and Directives Branch, Division of Administration Services, Office of Administration, U.S. Nuclear Regulatory Commission, Washington, DC 20555–0001, and should cite the publication date and page number of this **Federal Register** notice. Written comments may also be delivered to Room 6D22, Two White Flint North, 11545 Rockville Pike, Rockville, Maryland from 7:30 a.m. to 4:15 p.m. Federal workdays. Copies of written comments received may be examined at the NRC Public Document Room, the Gelman Building, 2120 L Street, NW., Washington, DC. The filing of requests for a hearing and petitions for leave to intervene is discussed below.

By November 5, 1999, the licensee may file a request for a hearing with respect to issuance of the amendment to the subject facility operating license and any person whose interest may be affected by this proceeding and who wishes to participate as a party in the proceeding must file a written request for a hearing and a petition for leave to intervene. Requests for a hearing and a petition for leave to intervene shall be filed in accordance with the Commission's ''Rules of Practice for Domestic Licensing Proceedings'' in 10 CFR part 2. Interested persons should consult a current copy of 10 CFR 2.714 which is available at the Commission's Public Document Room, the Gelman Building, 2120 L Street, NW., Washington, DC and at the local public document room for the particular facility involved. If a request for a hearing or petition for leave to intervene is filed by the above date, the Commission or an Atomic Safety and Licensing Board, designated by the Commission or by the Chairman of the Atomic Safety and Licensing Board Panel, will rule on the request and/or petition; and the Secretary or the designated Atomic Safety and Licensing Board will issue a notice of a hearing or an appropriate order.

As required by 10 CFR 2.714, a petition for leave to intervene shall set forth with particularity the interest of the petitioner in the proceeding, and how that interest may be affected by the results of the proceeding. The petition should specifically explain the reasons why intervention should be permitted with particular reference to the following factors: (1) The nature of the petitioner's right under the Act to be made a party to the proceeding; (2) the nature and extent of the petitioner's property, financial, or other interest in the proceeding; and (3) the possible effect of any order which may be entered in the proceeding on the petitioner's interest. The petition should also identify the specific aspect(s) of the subject matter of the proceeding as to which petitioner wishes to intervene. Any person who has filed a petition for leave to intervene or who has been admitted as a party may amend the petition without requesting leave of the Board up to 15 days prior to the first prehearing conference scheduled in the proceeding, but such an amended petition must satisfy the specificity requirements described above.

Not later than 15 days prior to the first prehearing conference scheduled in the proceeding, a petitioner shall file a supplement to the petition to intervene which must include a list of the contentions which are sought to be litigated in the matter. Each contention must consist of a specific statement of the issue of law or fact to be raised or controverted. In addition, the petitioner shall provide a brief explanation of the bases of the contention and a concise statement of the alleged facts or expert opinion which support the contention and on which the petitioner intends to rely in proving the contention at the hearing. The petitioner must also provide references to those specific sources and documents of which the petitioner is aware and on which the petitioner intends to rely to establish those facts or expert opinion. Petitioner must provide sufficient information to show that a genuine dispute exists with the applicant on a material issue of law or fact. Contentions shall be limited to matters within the scope of the amendment under consideration. The contention must be one which, if proven, would entitle the petitioner to relief. A petitioner who fails to file such a supplement which satisfies these requirements with respect to at least one contention will not be permitted to participate as a party.

Those permitted to intervene become parties to the proceeding, subject to any limitations in the order granting leave to intervene, and have the opportunity to participate fully in the conduct of the hearing, including the opportunity to present evidence and cross-examine witnesses.

If a hearing is requested, the Commission will make a final determination on the issue of no significant hazards consideration. The

final determination will serve to decide when the hearing is held.

If the final determination is that the amendment request involves no significant hazards consideration, the Commission may issue the amendment and make it immediately effective, notwithstanding the request for a hearing. Any hearing held would take place after issuance of the amendment.

If the final determination is that the amendment request involves a significant hazards consideration, any hearing held would take place before the issuance of any amendment.

A request for a hearing or a petition for leave to intervene must be filed with the Secretary of the Commission, U.S. Nuclear Regulatory Commission, Washington, DC 20555–0001, Attention: Rulemakings and Adjudications Staff, or may be delivered to the Commission's Public Document Room, the Gelman Building, 2120 L Street, NW., Washington DC, by the above date. A copy of the petition should also be sent to the Office of the General Counsel, U.S. Nuclear Regulatory Commission, Washington, DC 20555–0001, and to the attorney for the licensee.

Nontimely filings of petitions for leave to intervene, amended petitions, supplemental petitions and/or requests for a hearing will not be entertained absent a determination by the Commission, the presiding officer or the Atomic Safety and Licensing Board that the petition and/or request should be granted based upon a balancing of factors specified in 10 CFR 2.714(a)(1)(i)–(v) and 2.714(d).

For further details with respect to this action, see the application for amendment which is available for public inspection at the Commission's Public Document Room, the Gelman Building, 2120 L Street, NW., Washington, DC, and at the local public document room for the particular facility involved.

Baltimore Gas and Electric Company, Docket Nos. 50–317 and 50–318, Calvert Cliffs Nuclear Power Plant, Unit Nos. 1 and 2, Calvert County, Maryland

Date of amendments request: September 1, 1999.

Description of amendments request: The proposed amendment requests the following changes to the Technical Specifications:

1. Change the definition of Azimuthal Power Tilt in Technical Specification 1.1;

2. Correct the peak linear heat rate safety limit in Technical Specification 2.1.1.2;

3. Correct the DC voltage range listed in Surveillance Requirements 3.8.3.9 and 3.8.1.15;

4. Correct the loss of voltage and degraded voltage settings in Surveillance Requirement 3.3.6.2;

5. Correct the list of core operating limits in Technical Specification 5.6.5.a;

6. Correct a note on Technical Specification Figure 2.1.1–1;

7. Remove references to Unit 2, Cycle 12 in various Technical Specifications; and

8. Correct a typographical error in Technical Specification 5.6.

Specifically, the Proposed Technical Specifications are as follows:

1. Technical Specification 1.1 is proposed to be changed to replace the definition of Azimuthal Power Tilt with a new definition.

2. Technical Specification 2.1.1.2 is proposed to be changed by replacing the peak linear heat rate safety limit with less than or equal to 22kW/ft.

3. Technical Specification SR 3.3.6.2 is proposed to be changed by replacing the degraded voltage function with transient degraded voltage and steady-state degraded voltage functions.

4. Technical Specification SRs 3.8.1.9 and 3.8.1.15 are proposed to be changed by replacing the steady-state voltage range with the range of greater than or equal to 4060 volts and less than or equal to 4400 volts.

5. Technical Specification 5.6.5.a is proposed to be changed by adding Technical Specifications 3.1.4 and 3.3.1 to the list.

6. Technical Specification Figure 2.1.1–1 is proposed to be changed by removing the reference to Figure B2.1–1.

7. Various Technical Specifications and Figure 2.1.1–1a.

8. Technical specification 5.6.5.b, Item 41.ii is proposed to be changed by correcting CEN–199(B)–P to CEN–119(b)–P.

Basis for proposed no significant hazards consideration determination: As required by 10 CFR 50.91(a), the licensee has provided its analysis of the issue of no significant hazards consideration, which is presented below:

1. Would not involve a significant increase in the probability of consequences of an accident previously evaluated.

Change the Definition of Azimuthal Power Tilt

In their Infobulletin 97–07, Revision 1, Asea Brown Boveri, Inc.,—Combustion Engineering, Inc. (ABB–CE) stated that they had found a discrepancy in the Technical Specification definition of azimuthal power tilt. This discrepancy was found to exist in all CE Nuclear Steam supply System analog plants that use CECOR for monitoring and surveillance, and that use ABB–CE safety analysis methodology. Calvert Cliffs is one of those plants.

The value of Tq (Azimuthal tilt magnitude) as used in the azimuthal power tilt formula now in Technical Specification 1.1 is not conservative in all cases. With the proposed definition, Tq is the maximum fractional increase in power that can occur anywhere in the core because of tilt. Since Tq is the maximum value, it is consistently conservative. This is the appropriate measured value of tilt to be used in verifying that the tilt assumed in establishing safety limits has not been exceeded.

Therefore, changing the definition of azimuthal power tilt as proposed will not involve a significant increase in the probability of consequences of an accident previously evaluated.

Correct the Peak Linear Heat Rate Safety Limit

When Improved Standard Technical Specifications (ITS) were written, the peak linear heat rate safety limit of [less than or equal to] 21 kW/ft was inadvertently written in Technical specification 2.1.1.2. the correct number is [less than or equal to] 22kW/ft. the peak linear heat rate safety limit was established at [less than or equal to] 22 kW/ft in License Amendment Nos. 88 (Unit 1) and 61 (Unit 2). This number was valid for both units at the time of implementation of ITS.

Therefore, changing the peak linear heat rate safety limit to a number previously approved by the Nuclear Regulatory Commission (NRC) will not involve a significant increase in the probability or consequences of an accident previously evaluated.

Correct the Diesel Generator Loss of Voltage and Degraded Voltage Settings

When the ITS were written, a single set of numbers for the degraded voltage function was provided in Technical Specification Surveillance Requirement (SR) 3.3.6.2. The degraded voltage function should have been expressed as transient degraded voltage and steady-state degraded voltage. This separation of two types of degraded voltage functions was approved in License Amendment Nos. 226 (Unit 1) and 200 (Unit 2), which were issued before the ITS were approved.

Therefore, changing the degraded voltage function to the transient degraded voltage and steady-state degraded voltage functions previously approved by the NRC will not involve a significant increase in the probability or consequences of an accident previously evaluated.

Correct the Diesel Generator Voltage Range

Technical Specification SRs 3.8.1.9 and 3.8.1.15 require each diesel to be started from a stand-by condition. Surveillance requirement 3.8.1.9 requires that the generator reach [greater than or equal to] 3740 volts within 10 seconds. After steady-state conditions are reached, both SRs require the generator to maintain a voltage range of greater than 3740 volts and [less than or equal to] 4580 volts.

The Baltimore Gas and Electric Company ITS conversion added voltage requirements to SRs 3.8.1.9 and 3.8.1.15 consistent with SR 3.8.1.3. License Amendment Nos. 226 and 200 changed the voltage requirement for SR 3.8.1.3 to [greater than or equal to] 4060 volts and [less than or equal to] 4400 volts. The voltage was not corrected in SRs 3.8.1.9 and 3.8.1.15 when the Technical Specifications were changed to ITS.

Therefore, changing the voltage in SRs 3.8.1.9 and 3.8.1.15 to voltage previously approved by the NRC will not involve a significant increase in the probability or consequences of an accident previously evaluated.

Correct the List of Core Operating Limits

Technical Specification 5.6.5.a lists Technical Specifications that are to be included in the core operating limits and documented in the Core Operating Limits Report (COLR). In the transition to ITS, Technical Specifications 3.1.4 (Control Element Assembly Alignment) and 3.3.1 (Reactor Protective System—Operating) were inadvertently omitted from the list. The complete list is currently in the COLR.

Therefore, restoring Technical Specification 5.6.5.a to a list previously approved by the NRC will not involve a significant increase in the probability or consequences of an accident previously evaluated.

Correct Figure 2.1.1–1

A note of Technical Specification Figure 2.1.1–1 was changed in License Amendment Nos. 227 (Unit 1) and 201 (Unit 2) (ITS) to delete reference to Figure B2.1–1. Figure B2.1–1 was deleted from the Technical Specification Bases in the transition to ITS. In License Amendment Nos. 228 (Unit 1) and 202 (Unit 2), an old version of Figure 2.1.1–1 was used, and the reference to Figure B2.1–1 was thus inadvertently put back in the note. The proposed correction will replace the reference to Figure B2.1–1 with the wording approved in License Amendment Nos. 227 and 201.

Therefore, returning the note in Figure 2.1.1–1 to the wording previously approved by the NRC will not involve a significant increase in the probability or consequences of an accident previously evaluated.

Remove References to Unit 2, Cycle 12

License Amendment Nos. 228 and 202 added notes to indicate areas in the Technical Specifications that had special application to Cycle 12 of Unit 2 only. Cycle 12 of Unit 2 ended in May 1999. Since these notes no longer have application, they are proposed to be removed. Additionally, Figure 2.1.1-la applies only to Unit 2, Cycle 12, and it is proposed to be removed.

Therefore, removal of information no longer applicable to either unit is an administrative change and will not involve a significant increase in the probability or consequences of an accident previously evaluated.

Correct a Typographical Error

Technical Specification 5.6.5.b, Item 41.ii is being corrected to change the number of the publication ''BASSS, Use of the Incore Detector System to Monitor the DNB-LCO on Calvert Cliffs Unit 1 and Unit 2'' from CEN–199(B) to CEN–119(B)–P. Correction of a typographical error does not involve a significant increase in the probability or consequences of an accident previously evaluated.

2. Would not create the possibility of a new or different type of accident from an accident previously evaluated.

Change the Definition of Azimuthal Power Tilt

In their Infobulletin 97–07, Revision 1, ABB–CE stated that they had found a discrepancy in the Technical specification definition of azimuthal power tilt. This discrepancy was found to exist in all CE Nuclear Steam Supply System analog plants that use CECOR for monitoring and surveillance and that use ABB–CE safety analysis methodology. Calvert Cliffs is one of those plants.

The value of Tq (azimuthal tilt magnitude) as used in the azimuthal power tilt formula now in Technical specification 1.1 is not always the most conservative in all cases. With the proposed definition, Tq is the maximum fractional increase in power that can occur anywhere in the core because of tilt. Since Tq is the maximum value, it is conservative. This is the appropriate measured value of tilt to be used in verifying that the tilt assumed by ABB–CE in establishing safety limits has not been exceeded.

Therefore, changing the definition of azimuthal power tilt as proposed will not create the possibility of a new or different type of accident from any accident previously evaluated.

Correct the Peak Linear Heat Rate

When the ITS were written, a value of peak linear heat rate [less than or equal to] 21 kW/ft was inadvertently written in Technical Specification 2.1.1.2. The correct number is [less than or equal to] 22 kW/ft. The required peak linear heat rate was established at [less than or equal to] 22 kW/ft in License Amendment Nos. 88 and 61. This number was valid for both units at the time of implementation of ITS.

Therefore, changing the value of peak linear heat rate to a value previously approved by the NRC will not create the possibility of a new or different type of accident from any accident previously evaluated.

Correct the Diesel Generator Loss of Voltage and Degraded Voltage Settings

When the ITS were written, a single set numbers for the degraded voltage function was provided in Technical specification SR 3.3.6.2. The degraded voltage function should have been expressed as transient degraded voltage and steady-state degraded voltage. This separation of two types of degraded voltage functions was approved in License Amendment Nos. 226 and 200, which were issued before the ITS were approved.

Therefore, changing the degraded voltage function to the transient degraded voltage and steady-state degraded voltage functions previously approved by the NRC will not create the possibility of a new or different type of accident from any accident previously evaluated.

Correct the Diesel Generator Voltage Range

Technical Specification SRs 3.8.1.9 and 3.8.1.15 require that each diesel be started from a stand-by condition. Surveillance Requirement 3.8.1.9 requires that the generator reach [greater than or equal to] 3740 volts within 10 seconds. After steady-state conditions are reached, both SRs require the generator to maintain a voltage range of greater than 3740 volts and [less than or equal to] 4580 volts.

The Baltimore Gas and Electric Company ITS conversion added voltage requirements to SRs 3.8.1.9 and 3.8.1.15 consistent with SR 3.8.1.3. License Amendment Nos. 226 and 200 changed the voltage requirement for SR 3.8.1.3 to [greater than or equal to] 4060 volts and [less than or equal to] 4400 volts. The voltage was not corrected in SRs 3.8.1.9 and 3.8.1.15 when the Technical Specifications were changed to ITS.

Therefore, changing the voltage in SRs 3.8.1.9 and 3.8.1.15 to a voltage previously approved by the NRC will not create the possibility of a new or different type of accident from any accident previously evaluated.

Correct the List of Core Operating Limits

Technical Specification 5.6.5.a lists Technical specifications that are to be included in the core operating limits and documented in the COLR. In the transition to ITS, Technical Specifications 3.1.4 (Control Element Assembly Alignment) and 3.3.1 (Reaction Protective System—Operating) were inadvertently omitted from the list. The complete list is currently in the COLR.

Therefore, restoring Technical Specification 5.6.5.a to a list previously approved by the NRC will not create the possibility of a new or different type of accident from any accident previously evaluated.

Correct Figure 2.1.1–1

A note on Technical Specification Figure 2.1.1–1 was changed in License Amendment Nos. 227 and 201 (ITS) to delete reference to Figure B2.1–1. Figure B2.1–1 was deleted from the Technical Specification Bases in the transition of ITS. In License Amendment Nos. 228 and 202, an old version of Figure 2.1.1–1 was used, and the reference to Figure B2.1–1 was thus inadvertently put back in the note. The proposed correction will replace the reference to Figure B2.1–1 with the wording approved in License Amendment Nos. 227 and 201.

Therefore, removal of information no longer applicable to either unit is an administrative change and will not create the possibility of a new or different type of accident from any accident previously evaluated.

Remove References to Unit 2, Cycle 12

License Amendment Nos. 228 and 202 added notes to indicate areas in the Technical Specifications that had special application to Cycle 12 of Unit 2 only. Cycle 12 of Unit 2 ended in May 1999. Since these notes no longer have application, they are

proposed to be removed. Additionally, Figure 2.1.1–1a applies only to Unit 2, Cycle 12, and is proposed to be removed.

Therefore, removal of information no longer applicable to either unit is an administrative change and will not create the possibility of a new or different type of accident from any accident previously evaluated.

Correct a Typographical Error

Technical Specification 5.6.5.b, Item 41.ii is being corrected to change the number of the publication ''BASSS, Use of the Incore Detector System to Monitor the DNB–LCO on Calvert Cliffs Unit 1 and Unit 2'' from CEN–199(B)–P to CEN–119(B)–P. Correction of a typographical error will not create the possibility of a new or different type of accident from any accident previously evaluated.

3. Would not involve a significant reduction in the margin of safety.

Change the Definition of Azimuthal Power Tilt

The margin of safety in this case is whether the azimuthal power tilt calculation shows the highest (most conservative) value for Tq (azimuthal tilt magnitude).

The value of Tq as used in the azimuthal power tilt formula now in Technical Specification 1.1 is not always the most conservative in all cases. With the proposed definition, Tq is the maximum fractional increase in power that can occur anywhere in the core because of tilt. Since Tq is the maximum value, it is conservative. This is the appropriate measured value of tilt to be used in verifying that the tilt assumed in establishing safety limits has not been exceeded.

Therefore, changing the definition of azimuthal power tilt as proposed will not involve a significant reduction in the margin of safety.

Correct the Peak Linear Heat Rate Safety Limit

The margin of safety in this case was previously approved by the NRC in License Amendment Nos. 88 and 61.

Correct the Diesel Generator Loss of Voltage and Degraded Voltage Settings

The margin of safety in this case was previously approved by the NRC in License Amendment Nos. 226 and 200.

Correct the Diesel Generator Voltage Range

The margin of safety in this case was previously approved by the NRC in License Amendment Nos. 226 and 200.

Correct the List of Core Operating Limits

Technical Specification 5.6.5.a lists Technical specifications that are to be included in the core operating limits and documented in the COLR. In the transition to ITS, Technical Specifications 3.1.4 (Control Element Assembly Alignment) and 3.3.1 (Reactor Protective System—Operating) were inadvertently omitted from the list. The complete list is currently in the COLR.

Therefore, restoring Technical Specification 5.6.5.a to a list previously approved by the NRC will not involve a significant reduction in the margin of safety.

Correct Figure 2.1.1–1

A note on Technical Specification Figure 2.1.1–1 was changed in License Amendment Nos. 227 and 201 (ITS) to delete reference to Figure B2.1–1. Figure B2.1–1 was deleted from the Technical Specification Bases in the transition to ITS. In License Amendment Nos. 228 and 202, an old version of figure 2.1.1–1 was used, and the reference to Figure B2.1–1 was thus inadvertently put back in the note. The proposed correction will replace the reference to Figure B2.1–1 with the wording approved in License Amendment Nos. 227 and 201.

Therefore, returning the note in Figure 2.1.1–1 to the wording previously approved by the NRC will not involve a significant reduction in the margin of safety.

Remove References to Unit 2, Cycle 12

License Amendment Nos. 228 and 202 added notes to indicate areas in the Technical Specifications that had special application to Cycle 12 of Unit 2 only. Cycle 12 of Unit 2 ended in May 1999. Since these notes no longer have application, they are proposed to be removed. Additionally, Figure 2.1.1–1a applies only to Unit 2, Cycle 12, and it is proposed to be removed.

Therefore, removal of information no longer applicable to either unit is an administrative change and will not involve a significant reduction in the margin of safety.

Correct a Typographical Error

Technical specification 5.6.5.b, Item 41.ii is being corrected to change the number of the publication ''BASSS, Use of the Incore Detector system to Monitor the DNB–LCO on Calvert cliffs Unit 1 and Unit 2'' from CEN–199(B)–P to CEN–119(B)–P. Correction of a typographical error will not involve a significant reduction in the margin of safety.

The NRC staff has reviewed the licensee's analysis and, based on this review, it appears that the three standards of 50.92(c) are satisfied. Therefore, the NRC staff proposes to determine that the amendments request involves no significant hazards consideration.

Local Public Document Room location: Calvert County Library, Prince Frederick, Maryland 20678.

Attorney for licensee: Jay E. Silberg, Esquire, Shaw, Pittman, Potts and Trowbridge, 2300 N Street, NW., Washington, DC 20037.

NRC Section Chief: S. Singh Bajwa.

Carolina Power & Light Company, et al., Docket No. 50–400, Shearon Harris Nuclear Power Plant, Unit 1, Wake and Chatham Counties, North Carolina

Date of amendment request: August 26, 1999.

Description of amendment request: The proposed amendment would revise TS 3/4.9.4, ''Containment Building Penetrations,'' and its associated Bases to allow penetrations which provide direct access from the containment atmosphere to the outside atmosphere to remain open during refueling operations provided certain administrative controls are met.

Basis for proposed no significant hazards consideration determination: As required by 10 CFR 50.91(a), the licensee has provided its analysis of the issue of no significant hazards consideration, which is presented below:

1. The proposed amendment does not involve a significant increase in the probability or consequences of an accident previously evaluated.

Containment is not an accident initiating system as described in the Final Safety Analysis Report. This change is applicable only in Mode 6 during Core Alterations or movement of irradiated fuel (which occurs when the unit is shutdown). The proposed change will not modify equipment used for fuel movement or core alterations within the HNP [Harris Nuclear Plant] Containment Building. Administrative controls will be used to isolate containment in the event of a fuel handling accident. The consequences of a Fuel Handling Accident inside containment will increase as a result of this change. However, the proposed administrative controls will require closure of containment prior to exceeding standard review plan dose limits due to a radiological release from a design basis fuel handling accident.

Therefore, the proposed change does not involve a significant increase in the probability or consequences of an accident previously evaluated.

2. The proposed amendment does not create the possibility of a new or different kind of accident from any accident previously evaluated.

The proposed change provides for administrative controls and operating restrictions for air lock doors consistent with previous guidance authorized by the Commission for similar nuclear power plants. Containment is not an accident initiating system as described in the Final Safety Analysis Report. Fuel Handling Accidents have been previously analyzed for the Harris Nuclear Plant.

Therefore, the proposed change does not create the possibility of a new or different kind of accident from any accident previously evaluated.

3. The proposed amendment does not involve a significant reduction in the margin of safety.

Administrative controls will be used to isolate containment in the event of a fuel handling accident. The proposed administrative controls will require closure of containment prior to exceeding standard review plan dose limits due to a radiological release from a design basis fuel handling accident.

Therefore, the proposed change does not involve a significant reduction in the margin of safety.

The NRC staff has reviewed the licensee's analysis and, based on this review, it appears that the three standards of 10 CFR 50.92(c) are satisfied. Therefore, the NRC staff proposes to determine that the amendment request involves no significant hazards consideration.

Local Public Document Room location: Cameron Village Regional Library, 1930 Clark Avenue, Raleigh, North Carolina 27605.

Attorney for licensee: William D. Johnson, Vice President and Senior Counsel, Carolina Power & Light Company, Post Office Box 1551, Raleigh, North Carolina 27602.

NRC Section Chief: Sheri R. Peterson.

Entergy Operations, Inc., Docket No. 50–368, Arkansas Nuclear One, Unit No. 2, Pope County, Arkansas

Date of amendment request: July 29, 1999.

Description of amendment request: The proposed change to the Arkansas Nuclear One, Unit 2, Technical Specifications would allow the performance of a special inspection of the steam generator tubes during an upcoming mid-cycle outage. This mid-cycle outage is planned for the purpose of performing inspections in selected areas of the steam generator tube bundle where previous inspections have revealed tube degradation. The proposed change would limit the initial inspection scope to these identified areas and includes a scope expansion criteria to address unexpected conditions.

Basis for proposed no significant hazards consideration determination: As required by 10 CFR 50.91(a), the licensee has provided its analysis of the issue of no significant hazards consideration, which is presented below:

An evaluation of the proposed change has been performed in accordance with 10 CFR 50.91(a)(1) regarding no significant hazards considerations using the standards in 10 CFR 50.92(c). A discussion of these standards as they relate to this amendment request follows:

Criterion 1—Does Not Involve a Significant Increase in the Probability or Consequences of an Accident Previously Evaluated.

This change has no actual impact on any previously analyzed accident in the final safety analysis report (FSAR). A double-ended break of one steam generator tube is postulated as part of the ANO–2 design basis accident evaluation. The change permits Entergy Operations to determine the appropriate scope and expansion criteria for a special steam generator tube inspection that is being performed at a frequency more conservative than that of the augmented inservice inspection program included in the TSs [Technical Specifications]. The special inspection will find and repair certain steam generator tubing flaws that would otherwise remain in service until the next scheduled refueling outage. The increased inspection frequency reduces the probability that a flaw in a steam generator tube could grow to a size that would affect the leakage or structural integrity of the tube. The augmented inservice inspection program contained in the TSs is not being modified.

This change does not modify any parameter that will increase radioactivity in the primary system or increase the amount of radioactive steam released from the secondary safety valves or atmospheric dump valves in the event of a tube rupture.

Therefore, this change does not involve a significant increase in the probability or consequences of any accident previously evaluated.

Criterion 2—Does Not Create the Possibility of a New or Different Kind of Accident from any Previously Evaluated.

The scope of this change does not establish a potential new accident precursor. The design basis accident analyses for ANO–2 include the consequences of a double-ended break of one steam generator tube which bounds other postulated failure mechanisms. The proposed change would permit determination of alternate inspection criteria for a special inspection which is in addition to the periodic inservice inspections required by the TSs. The equipment used in the special inspection would not affect any plant components differently than those used for current TS required inspections.

Therefore, this change does not create the possibility of a new or different kind of accident from any previously evaluated.

Criterion 3—Does Not Involve a Significant Reduction in the Margin of Safety.

As previously stated, a double-ended rupture of one steam generator tube is accounted for in the ANO–2 design basis accident analysis. Considering that the 2P99 special inspection is in addition to the inservice inspection program defined in the ANO–2 TSs and that leakage detection capability is not being modified, performance of a special inspection of any scope will increase the margin of safety over the current TS requirements.

Therefore, this change does not involve a significant reduction in the margin of safety.

Therefore, based upon the reasoning presented above and the previous discussion of the amendment request, Entergy Operations has determined that the requested change does not involve a significant hazards consideration.

The NRC staff has reviewed the licensee's analysis and, based on this review, it appears that the three standards of 10 CFR 50.92(c) are satisfied. Therefore, the NRC staff proposes to determine that the amendment request involves no significant hazards consideration.

Local Public Document Room location: Tomlinson Library, Arkansas Tech University, Russellville, Arkansas 72801.

Attorney for licensee: Nicholas S. Reynolds, Esquire, Winston and Strawn, 1400 L Street, NW., Washington, DC 20005–3502.

NRC Section Chief: Robert A. Gramm.

Indiana Michigan Power Company, Docket No. 50–315, Donald C. Cook Nuclear Plant, Unit 1, Berrien County, Michigan

Date of amendment request: August 17, 1999.

Description of amendment request: The proposed amendment would remove the voltage-based repair criteria, F* repair criteria, and sleeving methodologies from the Unit 1 Technical Specifications (T/S) and clarify the Bases sections accordingly.

Basis for proposed no significant hazards consideration determination: As required by 10 CFR 50.91(a), the licensee has provided its analysis of the issue of no significant hazards consideration, which is presented below:

1. The proposed change does not involve a significant increase in the probability or consequences of an accident previously evaluated.

This change removes the interim steam generator tube plugging criteria from the T/S and reinstates the original T/S criteria consistent with Unit 2 (which does not have significantly degraded steam generators). The current T/S allow for continued operation with tubes that demonstrate indications per F* and voltage-based criteria. The basis used to justify the interim criteria is specific to the Unit 1 original steam generators (OSGs) and does not apply to the replacement steam generators (RSGs).

The proposed change returns the plugging criteria for the steam generator tubes to the original licensing basis. The criteria are in accordance with NUREG–0452, (old) ''Standard Technical Specifications.'' The plugging criteria are based on a minimum wall thickness due to wastage as determined by ASME [American Society of Mechanical Engineers] Section XI. The proposed change is conservative in nature because it does not allow for continued operation with F* and voltage-based degraded tubes. Because of this, the probability of a steam generator tube rupture (SGTR) is not increased.

The potential for a SGTR is also not increased as demonstrated in the qualification analysis and testing for the RSGs. The program for periodic in-service inspection monitors the integrity of the SG tubing to provide reasonable assurance that there is sufficient time to take proper and timely corrective action if any tube degradation is detected. The tube inspections themselves are not initiators of a SGTR. Therefore, this change is not expected to increase the probability of a SGTR during normal or accident conditions.

Unit 1 will continue to apply the T/S maximum primary-to-secondary leakage limit of 150 gallons per day (gpd) through any one SG to minimize the potential for excessive leakage. The EPRI [Electric Power Research Institute]-recommended 150 gpd limit

provides for leakage detection and plant shutdown in the event of an unexpected tube leak and minimizes the potential for excessive leakage or tube burst in the event of main steamline break (MSLB) or loss-of-coolant accident (LOCA) conditions. This lower limit is more restrictive than the limit (500 gpd per SG and total leakage of 1440 gpd) utilized for determination of offsite dose and also provides further assurance that the probability of a SGTR is not increased.

The design basis doses calculated for postulated accidents involving degradation of SG tubes, such as SGTR and MSLB accidents, as presented in UFSAR chapter 14 accident analysis, have been evaluated. The SGTR consequences continue to be bounded by the design basis analyses due to the allowable leakage rate specified by this change. The proposed T/S leakage rate is maintained at 150 gpd per SG. However, the maximum leakage of 500 gpd per SG and total leakage of 1440 gpd for all four generators was used to determine offsite dose in UFSAR chapter 14. The MSLB consequences are decreased by installation of the RSGs due to the reduction in primary-to-secondary leakage during the MSLB. Under the approved interim plugging criteria, a leak rate of 8.4 gpm was determined to be the upper limit for allowable primary-to-secondary leakage in the faulted steam generator. This leakage, combined with the 150 gpd leakage from the non-faulted SGs, was determined to limit the offsite dose to 10% of the 10 CFR 100 limits. Following replacement of the SGs, the leakage is limited during the MSLB to 150 gpd for both the faulted and unfaulted SGs. Therefore, the Unit 1 MSLB dose will be bounded by the current Unit 2 dose analysis, which is less than 10% of 10 CFR 100 limits.

Therefore, the proposed change does not involve a significant increase in the probability or consequences of an accident previously evaluated.

2. The proposed change does not create the possibility of a new or different kind of accident from any accident previously evaluated.

Removing application of voltage-based repair criteria, F* repair criteria, and sleeving methodologies upon installation of the RSGs will not introduce significant or adverse changes to the plant design basis that could lead to a new or different kind of accident being created. This change does not change the overall objective of surveillance activities—maintaining the structural integrity of this portion of the reactor coolant system. The surveillance activities are performed during outages. The proposed change in the surveillance program returns the program to the initial licensing basis. No new failures are created.

Therefore, the proposed change does not create the possibility of a new or different kind of accident previously evaluated.

3. The proposed change does not involve a significant reduction in a margin of safety.

Removing the application of voltage-based and F* repair criteria and sleeving methodologies does not involve a reduction in the margin of safety. The RSG tubing has been shown to retain adequate structural and leakage integrity during normal, transient, and postulated accident conditions consistent with GDC 14, 15, 30, 31, and 32 of 10 CFR [Part] 50 [A]ppendix A. The RSG tubing has been designed and evaluated consistent with the ASME Section III, 1989 edition. The proposed plugging criteria are based on ASME Section XI and do not allow for operation with indications identified by F* and voltage-based criteria. The proposed program for periodic in-service inspection of the RSGs monitors the integrity of the SG tubing to provide reasonable assurance that there is sufficient time to take proper and timely corrective action if any tube degradation is present. The proposed program is consistent with NUREG–0452 and was the basis for the original Unit 1 T/S surveillance program.

The proposed change maintains the T/S maximum primary-to-secondary leakage at 150 gpd per generator to minimize the potential for excessive leakage. This limit provides for leakage detection and shutdown in the event of an unexpected tube leak and minimizes the potential for excessive leakage or tube burst in the event of a MSLB or LOCA. Because this limit is maintained, the margin of safety is maintained.

Therefore, it is concluded that this change does not involve a significant reduction in a margin of safety.

The NRC staff has reviewed the licensee's analysis and, based on this review, it appears that the three standards of 10 CFR 50.92(c) are satisfied. Therefore, the NRC staff proposes to determine that the amendment request involves no significant hazards consideration.

Local Public Document Room location: Maud Preston Palenske Memorial Library, 500 Market Street, St. Joseph, MI 49085.

Attorney for licensee: Jeremy J. Euto, Esq., 500 Circle Drive, Buchanan, MI 49107.

NRC Section Chief: Claudia M. Craig.

Indiana Michigan Power Company, Docket Nos. 50–315 and 50–316, Donald C. Cook Nuclear Plant, Units 1 and 2, Berrien County, Michigan

Date of amendment requests: September 10, 1999.

Description of amendment requests: The proposed amendments would revise Technical Specification (T/S) 3/4.4.7 so that the surveillance requirement does not need to be performed when the reactor is defueled with no forced circulation. The proposed revision to T/S 3/4.4.7 also includes changes to Tables 3.4–1 and 4.4–3. A change is proposed to Unit 1 T/S Table 4.4–3 to revise the reactor coolant system (RCS) chemistry sampling frequency from three times per 7 days with a maximum interval of 72 hours to a frequency of at least once per 72 hours. An editorial change to Unit 1 Tables 3.4–1 and 4.4–3 would relocate the asterisk for the footnote to a position adjacent to the parameter ''dissolved oxygen,'' from its current position next to the allowable chemistry limit in Table 3.4–1 and the analysis frequency in Table 4.4–3. An editorial change would also correct the footnote for Table 3.4–1 for Unit 1 and Unit 2 by making the word ''limit'' plural, as it applies to both the steady-state and transient limits.

Changes are also proposed to revise Surveillance Requirement 4.11.2.2 by deleting the phrase ''by analysis of the Reactor Coolant System noble gases.''

Basis for proposed no significant hazards consideration determination: As required by 10 CFR 50.91(a), the licensee has provided its analysis of the issue of no significant hazards consideration, which is presented below:

1. Does the change involve a significant increase in the probability of occurrence or consequences of an accident previously evaluated?

The proposed changes to the RCS chemistry sampling requirements do not affect the probability of a loss-of-coolant accident or steam generator tube rupture, which are evaluated in Sections 14.3 and 14.2.4, respectively, of the Updated Final Safety Analysis Report (UFSAR). RCS contaminant limits are maintained to reduce the potential for RCS leakage or failure due to corrosion. Sampling the RCS for contaminants does not initiate an accident. Deleting the requirement to obtain samples when the reactor is defueled does not modify any plant equipment or affect plant operation and therefore does not introduce any new accident initiators or precursors. Suspension of RCS chemistry sampling when the reactor is defueled does not increase the potential for RCS leakage or failure because the corrosive effects of the contaminants is minimal during this low-temperature, low-pressure condition. To ensure elevated contaminant levels would be detected and corrected prior to subjecting the system to a high-temperature condition, chemistry sampling will be reinstated within 72 hours of re-establishing forced circulation and prior to entering Mode 6. Removing the restriction for analyzing primary coolant chemical contaminants at least three times every seven days does not change the maximum surveillance interval. This change allows the sample to be collected two or three times per week, consistent with the maximum 72-hour interval. The 72-hour sampling and analysis interval is consistent with the current requirement in the Unit 2 T/S, and industry guidance in NUREG–0452, ''Standard Technical Specifications.'' The 72-hour interval continues to provide adequate assurance that concentrations in excess of the limits are detected in sufficient time to take corrective actions. Therefore, the probability of occurrence of a previously evaluated accident is not increased.

This change does not alter the quantity of radioactive material in any system during normal plant operation, the amount of

shielding provided by plant systems, or the mitigative capabilities of any system following an event. Therefore, the consequences of a previously evaluated accident are not increased.

The editorial changes to the RCS chemistry T/S provide consistency between the Unit 1 and Unit 2 T/S and the Standard Technical Specifications. These changes do not affect the design or operation of any system, structure, or component in the plant. The accident analysis assumptions and results are unchanged. No new failures or interactions are created.

The amount of radioactive material in the gas storage tanks is controlled to ensure that, in the event of a rupture of one of these tanks, the resulting total body exposure to an individual at the nearest site boundary would not exceed 0.5 rem. The accidental waste gas release event is summarized in Section 14.2.3 of the UFSAR. Sampling to determine the radioactivity levels in the tanks does not initiate an accident or identify any accident precursors. The increased sampling flexibility does not change the method of operating the waste gas system, nor does it modify any interfaces with other plant systems. Therefore, this change does not increase the probability of occurrence of an accidental waste gas release event.

Implementation of a different sampling method does not change the maximum quantity of radioactive material specified in the T/S Limiting Condition for Operation (LCO). The sampling method has no effect on normal plant gaseous radwaste activities, so the composition of the radioactive gaseous nuclides present in the tank at the time of the event is not affected. As the proposed revision allows a change to the method of sampling but does not affect the radioactivity limit for the gas storage tanks, the proposed change does not increase the consequences of an accidental waste gas release event.

Therefore, the probability of occurrence or the consequences of accidents previously evaluated are not increased.

2. Does the change create the possibility of a new or different kind of accident from any accident previously evaluated?

The proposed changes to revise the RCS chemistry sampling frequency and to suspend RCS chemistry sampling when the reactor is defueled with no forced circulation does not change the method of operating any equipment or the operational limits of any equipment. The proposed changes do not introduce any new failure mechanisms to the RCS or any other plant systems. The proposed change does not involve any physical alterations to any plant equipment, and causes no change in the method by which any plant system performs its function. Editorial changes to footnotes for Tables 3.4–1 and 4.4–3 provide consistency between the T/S for Unit 1 and Unit 2, but do not change the methods of operating any equipment or introduce any new failure mechanisms.

The proposed change to eliminate the prescriptive waste gas tank sampling method does not introduce any new failure mechanisms to the waste disposal system, involve any physical changes to the waste disposal system or any other plant systems, or change the way any plant systems are operated. This change does not change any interfaces between the waste disposal system and any other plant systems. The proposed changes continue to ensure the system is operated within the existing limit established by the T/S LCO. Thus, no adverse safety considerations are introduced by this proposed change to the T/S.

Therefore, the proposed changes do not create the possibility of a new or different kind of accident from any accident previously evaluated.

3. Does the change involve a significant reduction in a margin of safety?

The margin of safety pertinent to the RCS chemistry surveillance is related to the concentration of chemical contaminants that would expedite corrosion of the RCS piping and components and the period of time during which the system is allowed to operate outside the T/S limits. The proposed changes to the RCS chemistry surveillance do not alter either of these criteria. These proposed changes do not affect any safety limits or T/S parameter limits. The proposed changes do not introduce new equipment, equipment modifications, or new or different modes of plant operation. These changes do not affect the operational characteristics of any equipment or systems. The editorial changes to footnotes for Tables 3.4–1 and 4.4–3 provide consistency between the T/S for Unit 1 and 2, but do not affect the acceptance criteria or surveillance frequencies for this T/S.

The margin of safety pertinent to the waste gas storage tanks is related to the quantity of radioactivity that would be released in the unlikely event of a tank rupture. The proposed change to the gas storage tank T/S eliminates the prescriptive sampling methodology, but does not affect the requirement to periodically quantify the radioactive gaseous material in the gas storage tanks. The proposed change does not affect the quantity of radioactivity allowed in the gas storage tanks, nor does it alter the methodology, assumptions, or results of any safety analyses. The proposed change to delete the prescriptive sampling method does not affect any safety limits or T/S parameter limits.

Therefore, the proposed changes do not involve a significant reduction in a margin of safety.

The NRC staff has reviewed the licensee's analysis and, based on this review, it appears that the three standards of 10 CFR 50.92(c) are satisfied. Therefore, the NRC staff proposes to determine that the amendment requests involve no significant hazards consideration.

Local Public Document Room location: Maud Preston Palenske Memorial Library, 500 Market Street, St. Joseph, MI 49085.

Attorney for licensee: Jeremy J. Euto, Esq., 500 Circle Drive, Buchanan, MI 49107.

NRC Section Chief: Claudia M. Craig.

National Aeronautics Space Administration (NASA), Docket No. 50–30, NASA Test Reactor, Erie County, Ohio

Date of amendment request: March 25, 1999, as supplemented by letter dated August 10, 1999.

Description of amendment request: The proposed amendment would change Lewis Research Center (LeRC) to Glenn Research Center (GRC).

Basis for proposed no significant hazards consideration determination: As required by 10 CFR 50.91(a), the licensee has provided its analysis of the issue of no significant hazards consideration, which is presented below:

(1) Would not involve a significant increase in the probability or consequences of an accident previously evaluated.

The proposed amendment will change the name of the Licensee for the Plum Brook Reactor Facility (PBRF) TR–3 license, a possession only license, from Lewis Research Center (LeRC) to the Glenn Research Center (GRC). The amendment request is necessary because NASA has changed the name of the Lewis Research Center to the Glenn Research Center at Lewis Field under legislative action and signed into law (sec. 434, P.L. 105–276, 112 Stat. 2461) on October 21, 1998. The effective date of this name change was March 1, 1999. NASA, GRC will retain the PBRF license and the responsibility to continue maintaining the PBRF Reactor Facility in a safe protected storage mode under the current TR–3 possess-but-not-operate license. In addition, the current plans to provide a PBRF decommissioning plan to the NRC by the end of CY 1999 and the eventual decommissioning by the end of CY 2007 have not changed.

There will be no change in the funding status of the GRC in either maintaining the PBRF facility in the safe protected storage mode or the eventual decommissioning. NASA, as a government agency, remains responsible for the continuing funding of both activities.

In addition, there will be no change in the personnel who are responsible for maintaining the present TR–3 license or in developing the PBRF Decommissioning Plan.

The proposed amendment does not require any physical change to the PBRF Facility, changes to the Technical Specifications or procedures under the PBRF TR–3 License other than the name change from LeRC to GRC. The proposed change does not increase the probability of any accident or increased risk to the public safety.

Therefore, the proposed amendment does not involve a significant increase in the probability or consequences of an accident condition previously evaluated.

(2) Would not create the possibility of a new or different kind of accident from any accident previously evaluated.

The proposed amendment does not modify the PBRF facility configuration or licensed activities. Therefore, no additional accident conditions are introduced.

Therefore, the proposed amendment does not involve a significant increase in the probability or consequence of an accident.

(3) Would not involve a significant reduction in a margin of safety.

This amendment is required because of the name change from LeRC to GRC. NASA will continue to be financially responsible to maintain the PBRF Facility under the existing TR–3 License.

Furthermore, the GRC personnel for the eventual PBRF decommissioning and contract support personnel reporting to GRC will continue to be technically qualified to maintain the PBRF under the safe protected storage mode. There has been no effective change in the personnel who will be responsible to implement the eventual decommissioning effort that will be required under the future PBRF Decommissioning Plan.

Plum Brook's existing qualified contractors remained in place following the name change. The requested amendment does not involve any changes in the performance of current licensed activities and these activities will continue in their current form without changes or interruptions of any kind.

The proposed amendment does not alter any margin of safety because it does not involve any changes in the PBRF Facility or licensed activities under the TR–3 License. All activities will continue in the current form without changes or interruptions of any kind as a result of the name.

Therefore, the proposed amendment does not involve a significant reduction in a margin of safety.

The NRC staff has reviewed the licensee's analysis and, based on this review, it appears that the standards of 10 CFR 50.92(c) are satisfied. Therefore, the NRC staff proposes to determine that the request for amendments involves no significant hazards consideration.

Local Public Document Room location: N/A.

Attorney for licensee: Elias T. Naffah, MS 500–118, NASA, Glenn Research Center, 21000 Brookpark Road, Cleveland Ohio 44135.

NRC Branch Chief: Ledyard B. Marsh.

Northeast Nuclear Energy Company, et al., Docket No. 50–336, Millstone Nuclear Power Station, Unit No. 2, New London County, Connecticut

Date of amendment request: July 16, 1999.

Description of amendment request: Proposed relocation of Technical Specifications 3/4.9.3.2, ''Refueling Operations, Spent Fuel Temperature,'' 3/4.9.3.3, ''Refueling Operations, Decay Time,'' 3/4.9.5, ''Refueling Operation, Communications,'' 3/4.9.6, ''Refueling Operation, Crane Operability—Containment Building,'' and 3/4.9.7, ''Refueling Operations, Crane Travel—Spent Fuel Storage Building,'' to the Millstone, Unit No. 2 Technical Requirements Manual. The associated Bases pages and index pages will be modified to address the proposed change.

Basis for proposed no significant hazards consideration determination: As required by 10 CFR 50.91(a), the licensee has provided its analysis of the issue of no significant hazards consideration. The NRC staff has reviewed the licensee's analysis against the standards of 10 CFR 50.92(c). The NRC staff's review is presented below:

1. Involve a significant increase in the probability or consequences of an accident previously evaluated.

Technical Specification 3/4.9.3.2, ''Refueling Operations, Spent Fuel Pool Temperature,'' is proposed to be relocated to the TRM where future changes will be controlled in accordance with 10 CFR 50.59. This specification limits spent fuel pool temperature to be less than or equal 140 °F to ensure the resin in the spent fuel cooling demineralizers will not degrade and the temperature and humidity are compatible with personnel comfort and safety requirements. Additionally, the requirement ensures that the design temperature of the fuel pool cooling system, liner/building structures, and racks is not exceeded. Relocation of this Technical Specification to the TRM does not imply any reduction in its importance in limiting the spent fuel pool bulk temperature to be less than or equal to 140 °F. Spent fuel pool bulk temperature is a design bases process variable which is used to establish the required heat removal capabilities of the spent fuel heat removal system. In the unlikely event of total loss of cooling water flow to the spent fuel pool, the pool water temperature may reach 212 °F within approximately 9 hours and will result in a boiling condition. This event does not represent a challenge to the fuel cladding, as a fission product barrier, unless the fuel becomes uncovered. The requirement on storage pool water level is covered by Technical Specification 3/4.9.12, ''Storage Pool Water Level,'' which requires a minimum of 23 feet of water over the top of irradiated fuel assemblies. Therefore, spent fuel pool bulk temperature is not by itself a process variable that is an initial condition of a design basis accident. This Technical Specification does not cover a process variable, design feature, or operating restriction that is an initial condition of a design basis accident or transient analysis that either assumes the failure of or presents a challenge to the integrity of a fission product barrier. It does not cover a structure, system, or component that is part of the primary success path which functions or actuates to mitigate a design basis accident or transient that either assumes the failure of or presents a challenge to the integrity of a fission product barrier. The proposed change will not alter the way pool temperature is measured, nor will it alter any of the assumptions used in the spent fuel pool fuel handling accident analysis. Relocation of this Technical Specification to the TRM does not degrade the performance of any safety systems or prevent actions assumed in the accident analysis, nor does it alter any of the assumptions made in the analysis that could increase the consequences of accidents. Therefore, this change will not significantly increase the probability or consequences of an accident previously evaluated.

Technical Specification 3/4.9.3.3, ''Refueling Operations, Decay Time,'' is proposed to be relocated to the TRM where future changes will be controlled in accordance with 10 CFR 50.59. This specification requires the reactor to remain in Mode 5 or 6 until the most recent core offload has decayed a sufficient time to ensure alternate cooling is available during this time to cool the spent fuel pool should a failure occur in the Spent Fuel Pool Cooling System. Alternate cooling would be provided by the Shutdown Cooling System. Relocation of this Technical Specification to the TRM does not imply any reduction in its importance in insuring that the most recent core offload has decayed a sufficient time. If the requirement to remain in Mode 5 or 6 until the most recent core offload has decayed for 504 hours is not satisfied, the spent fuel pool cooling system may not have the capability to remove decay heat and stay below the Technical Specification limit of 140 °F. In the unlikely event of total loss of cooling water flow to the spent fuel pool, the pool water temperature may reach 212 °F in less than 9 hours and will result in a boiling condition. This event does not represent a challenge to the fuel cladding, as a fission product barrier, unless the fuel becomes uncovered. The requirements on storage pool water level is covered by Technical Specification 3/4.9.12, ''Storage Pool Water Level,'' which requires a minimum of 23 feet of water over the top of irradiated fuel assemblies. Therefore, this requirement to remain in Mode 5 or 6 until the most recent core offload has decayed for 504 hours is not by itself a process variable that is an initial condition of a design basis accident. This Technical Specification does not cover a process variable, design feature, or operating restriction that is an initial condition of a design basis accident or transient analysis that either assumes the failure of or presents a challenge to the integrity of a fission product barrier. It does not cover a structure, system, or component that is part of the primary success path which functions or actuates to mitigate a design basis accident or transient that either assumes the failure of or presents a challenge to the integrity of a fission product barrier. The proposed change will not alter the requirement that the most recent core offload has decayed a sufficient time, nor will it alter any of the assumptions used in the spent fuel pool fuel handling accident analysis. Relocation of this Technical Specification to the TRM does not degrade the performance of any safety systems or prevent actions assumed in the accident analysis, nor does it alter any of the assumptions made in the analysis that could increase the consequences of accidents. Therefore, this change will not significantly increase the probability or consequences of an accident previously evaluated.

Technical Specification 3/4.9.5, ''Refueling Operations, Communications,'' is proposed to be relocated to the TRM where future

changes will be controlled in accordance with 10 CFR 50.59. This specification requires communication between the control room and the refueling station, to ensure any abnormal change in the facility status, as indicated on the control room instrumentation, can be communicated to the refueling station personnel. Relocation of this Technical Specification to the TRM does not imply any reduction in its importance in insuring communication between the control room and the refueling station. This Technical Specification does not cover a process variable, design feature, or operating restriction that is an initial condition of a design basis accident or transient analysis that either assumes the failure of or presents a challenge to the integrity of a fission product barrier. It does not cover a structure, system, or component that is part of the primary success path which functions or actuates to mitigate a design basis accident or transient that either assumes the failure of or presents a challenge to the integrity of a fission product barrier. The proposed change will not alter the requirement on communication between the control room and the refueling station, nor will it alter any of the assumptions used in the spent fuel pool fuel handling accident analysis. Relocation of this Technical Specification to the TRM does not degrade the performance of any safety systems or prevent actions assumed in the accident analysis, nor does it alter any of the assumptions made in the analysis that could increase the consequences of accidents. Therefore, this change will not significantly increase the probability or consequences of an accident previously evaluated.

Technical Specification 3/4.9.6, ''Refueling Operations, Crane Operability—Containment Building,'' is proposed to be relocated to the TRM where future changes will be controlled in accordance with 10 CFR 50.59. This specification ensures the lifting device on the refueling machine has adequate capacity to lift the weight of a fuel assembly and a control element assembly, and that an automatic load limiting device is available to prevent damage to the fuel assembly during fuel movement. Relocation of this Technical Specification to the TRM does not imply any reduction in its importance in insuring that the lifting device on the refueling machine has adequate capacity. The automatic load limiting device and/or physical stops are not monitored and controlled during operation, nor are they assumed to function to mitigate the consequences of a design basis accident. The automatic load limiting device is checked on a periodic basis to ensure operability. This Technical Specification, which ensures the lifting device on the refueling machine has adequate capacity, does not cover a process variable, design feature, or operating restriction that is an initial condition of a design basis accident or transient analysis that either assumes the failure of or presents a challenge to the integrity of a fission product barrier. The proposed change will not alter the requirement that the lifting device on the refueling machine has adequate capacity, nor will it alter any of the assumptions used in the accident analysis. Relocation of this Technical Specification to the TRM does not degrade the performance of any safety systems or prevent actions assumed in the accident analysis, nor does it alter any of the assumptions made in the analysis that could increase the consequences of accidents. Therefore, this change will not significantly increase the probability or consequences of an accident previously evaluated.

Technical Specification 3/4.9.7, ''Refueling Operations, Crane Travel—Spent Fuel Storage Pool Building,'' is proposed to be relocated to the TRM where future changes will be controlled in accordance with 10 CFR 50.59. This specification ensures loads in excess of one fuel assembly containing a control element assembly, plus the weight of the fuel handling tool, will not be moved over other fuel assemblies in the spent fuel storage racks. Therefore, in the event of a drop of this load, the activity released is limited to that contained in one fuel assembly. Relocation of this Technical Specification to the TRM does not imply any reduction in its importance in insuring that loads in excess of 1800 pounds (except of a consolidated fuel storage box) are prohibited from travel over irradiated fuel. While this Technical Specification does address an operating restriction assumed in the accident analysis, there is no process variable that can be monitored during power operation of the plant. Crane interlocks and/or physical stops are used to assure that this requirement is met, but indication of the operation of the interlocks and/or physical stops is not available in the control room. These features inhibit movement of the crane so that monitoring is not necessary. This Technical Specification does not cover a structure, system, or component that is part of the primary success path which functions or actuates to mitigate a design basis accident or transient that either assumes the failure of or presents a challenge to the integrity of a fission product barrier. The proposed change will not alter the requirement that the crane interlocks and/or physical stops are OPERABLE, nor will it alter any of the assumptions used in the spent fuel pool fuel handling accident analysis. Relocation of this Technical Specification to the TRM does not degrade the performance of any safety systems or prevent actions assumed in the accident analysis, nor does it alter any of the assumptions made in the analysis that could increase the consequences of accidents. Therefore, this change will not significantly increase the probability or consequences of an accident previously evaluated.

Revision of Index Pages IX and XIII and the proposed change to Bases sections, by relocating them to the TRM, are administrative changes. Therefore, this change will not significantly increase the probability or consequences of an accident previously evaluated. The proposed changes do not alter how any structure, system, or component functions. There will be no effect on equipment important to safety. The proposed changes have no effect on any of the design basis accidents previously evaluated. Therefore, this License Amendment Request does not impact the probability of an accident previously evaluated, nor does it involve a significant increase in the consequences of an accident previously evaluated.

2. Create the possibility of a new or different kind of accident from any accident previously evaluated.

The proposed changes do not alter the plant configuration (no new or different type of equipment will be installed) or require any new or unusual operator actions. They do not alter the way any structure, system, or component functions and do not alter the manner in which the plant is operated. The proposed changes do not introduce any new failure modes. Therefore, the proposed changes will not create the possibility of a new or different kind of accident from any accident previously evaluated.

3. Involve a significant reduction in a margin of safety.

The proposed relocation of Technical Specification 3/4.9.3.2, ''Refueling Operations, Spent Fuel Pool Temperature,'' to the TRM does not imply any reduction in its importance in limiting the spent fuel pool bulk temperature to less than or equal to 140 °F. The proposed change will not alter the way pool temperature is measured. It will not alter any of the assumptions used in the spent fuel pool fuel handling accident analysis, nor will it cause any safety system parameters to exceed their acceptance limit. The proposed relocation of Technical Specification 3/4.9.3.3, ''Refueling Operations, Decay Time,'' to the TRM does not imply any reduction in its importance in insuring that the most recent core offload has decayed a sufficient time. The proposed change will not alter the requirement that the most recent core offload has decayed a sufficient time, it will not alter any of the assumptions used in the spent fuel pool fuel handling accident analysis, nor will it cause any safety system parameters to exceed their acceptance limit. The relocation of Technical Specification 3/4.9.5, ''Refueling Operations, Communications,'' to the TRM does not imply any reduction in its importance in insuring communication between the control room and the refueling station. The proposed change will not alter the requirement on communication between the control room and the refueling station, it will not alter any of the assumptions used in the spent fuel pool fuel handling accident analysis, nor will it cause any safety system parameters to exceed their acceptance limit. The relocation of Technical Specification 3/4.9.6, ''Refueling Operations, Crane Operability—Containment Building,'' to the TRM does not imply any reduction in its importance in insuring that the lifting device on the refueling machine has adequate capacity. The proposed change will not alter the requirement that the lifting device on the refueling machine has adequate capacity, it will not alter any of the assumptions used in the accident analysis, nor will it cause any safety system parameters to exceed their acceptance limit. The relocation of Technical Specification 3/4.9.7, ''Refueling Operations, Crane Travel—Spent Fuel Storage Pool Building,'' to the TRM does not imply any reduction in its importance in insuring that loads in excess of 1800 pounds (except of a consolidated fuel storage box) are prohibited from travel over irradiated fuel. The proposed change will not

alter the requirement that the crane interlocks and/or physical stops are OPERABLE, it will not alter any of the assumptions used in the spent fuel pool fuel handling accident analysis, nor will it cause any safety system parameters to exceed their acceptance limit. Revision of Index Pages IX and XIII and the proposed change to Bases sections by eliminating the sections corresponding to the relocated Technical Specifications are administrative changes. These changes will not alter any of the assumptions used in the spent fuel pool fuel handling accident analysis, nor will it cause any safety system parameters to exceed their acceptance limit. The proposed changes do not affect any of the assumptions used in the accident analysis, nor do they affect any operability requirements for equipment important to plant safety. Therefore, the proposed changes will not result in a significant reduction in a margin of safety.

Based on this review, it appears that the three standards of 10 CFR 50.92(c) are satisfied. Therefore, the NRC staff proposes to determine that the amendment request involves no significant hazards consideration.

Local Public Document Room location: Learning Resources Center, Three Rivers Community-Technical College, 574 New London Turnpike, Norwich, Connecticut, and the Waterford Library, ATTN: Vince Juliano, 49 Rope Ferry Road, Waterford, Connecticut.

Attorney for licensee: Lillian M. Cuoco, Esq., Senior Nuclear Counsel, Northeast Utilities Service Company, P.O. Box 270, Hartford, Connecticut.

NRC Section Chief: James W. Clifford.

PECO Energy Company, Docket No. 50–352, Limerick Generating Station, Unit 1, Montgomery County, Pennsylvania

Date of amendment request: June 7, 1999.

Description of amendment request: The proposed change to the Technical Specifications (TSs), if approved, will reflect the permanent deactivated configuration of the ''wet'' instrument reference leg isolation valve HV–61–102 which originally connected the Drywell Floor and Equipment Drain Tanks to level instruments outside the containment. The TS changes affecting TS Table 3.6.3–1, ''Primary Containment Isolation Valves,'' and its associated notations will reflect the current plant configuration. More specifically, TS Section 3/4.6.3, ''Primary Containment Isolation Valves,'' Table 3.6.3–1, Penetration Number 230B will be revised to designate the function of valve HV–61–102 as ''Deactivated,'' the maximum isolation time for valve HV–61–102 will be eliminated, and notations 1, 23, and 29 will be replaced with a new notation indicating the permanent configuration of the subject valve.

Basis for proposed no significant hazards consideration determination: As required by 10 CFR 50.91(a), the licensee has provided its analysis of the issue of no significant hazards consideration. The NRC staff has reviewed the licensee's analysis against the standards of 10 CFR 50.92(c). The NRC staff's review is presented below:

1. The proposed TS changes do not involve a significant increase in the probability or consequences of an accident previously evaluated.

The closed valve, HV–61–102, has no effect on the function of the Drywell Sump/ Equipment Drain Tanks, other safety-related systems, or other containment penetrations. The current status of the valve is locked closed, de-energized, and the motor operator cannot be accidentally actuated. In addition, the line is capped downstream of the isolation valve. As described above, the valve is considered to be in a passive configuration, where a malfunction is not expected and cannot cause an increase in the probability of a malfunction to itself or other safety-related equipment. The potential for increased releases outside the containment due to breaching of the valve assembly is no greater than that of the isolation design previously evaluated.

Therefore, the proposed change to the TSs does not involve a significant increase in the probability of occurrence or consequences of an accident previously evaluated in the Safety Analysis Report.

2. The proposed TS changes do not create the possibility of a new or different kind of accident from any accident previously evaluated.

The abandoned isolation valve conforms to approved isolation configurations, and its structural integrity has not been degraded by the modified configuration. The original function of valve HV–61–102 was only to provide isolation of the instrument line. Following the modification, the valve is independent of the function of the Drywell Sump/ Equipment Drain Tanks, other safety-related systems, and other penetrations. Since the valve is passive and has no requirements to be operated, it cannot create a different type of malfunction on itself or other safety-related systems. In addition, the valve is specifically designed to isolate and is essentially passive during accident conditions, it has no activity that could be the initiator of an accident of a different type.

Therefore, the proposed changes to the TSs do not create the possibility of a new or different kind of accident from any accident previously evaluated.

3. The proposed TS changes do not involve a significant reduction in a margin of safety.

Isolation valve HV–61–102 in its proposed permanent configuration meets the margin of safety described in TS Bases 3/4.6.3 since it is kept closed under all operational conditions and will not be under the constraint of TS closing times in order to maintain releases within specifications. The proposed changes have no impact on any safety analysis assumptions.

Therefore, the proposed TS changes do not involve a significant reduction in the margin of safety.

Based on this review, it appears that the three standards of 10 CFR 50.92(c) are satisfied. Therefore, the NRC staff proposes to determine that the amendment request involves no significant hazards consideration.

Local Public Document Room location: Pottstown Public Library, 500 High Street, Pottstown, PA 19464.

Attorney for licensee: J. W. Durham, Sr., Esquire, Sr. V.P. and General Counsel, PECO Energy Company, 2301 Market Street, Philadelphia, PA 19101.

NRC Section Chief: James W. Clifford.

Public Service Electric & Gas Company, Docket Nos. 50–272 and 50–311, Salem Nuclear Generating Station, Unit Nos. 1 and 2, Salem County, New Jersey

Date of amendment request: July 23, 1999, as supplemented on September 13, 1999.

Description of amendment request: The proposed amendment would revise Technical Specification Surveillance Requirement 4.8.1.1.2 to allow the 24-hour emergency diesel generator endurance run to be performed during power operation (i.e., Modes 1 and 2) instead of restricting the test to when the reactor was shutdown.

Basis for proposed no significant hazards consideration determination: As required by 10 CFR 50.91(a), the licensee has provided its analysis of the issue of no significant hazards consideration, which is presented below:

1. The proposed change does not involve a significant increase in the probability or consequences of an accident previously evaluated.

The proposed change to Technical Specification Surveillance Requirement (SR) 4.8.1.1.2.d.7 (24-hour emergency diesel generator (EDG) endurance run test) to eliminate the restriction to perform the test during shutdown conditions does not involve a significant increase in the probability of any previously evaluated accident. Although paralleling or connecting the EDG to off-site power for the test could induce an electrical distribution system perturbation, the same possibility exists when the EDG is tested during the monthly 1-hour loaded surveillance test (SR 4.8.1.1.2 a 2). This risk during testing the EDG monthly at power was reviewed and found acceptable by the NRC. Further, none of the automatic actuations and interlocks in the tested portion of the electrical system or the EDG control system are disabled during the 24-hour endurance run. Thus, the onsite safety-related electrical system remains protected from potential faults and perturbations.

The ability and capability [o]f the EDG to perform their safety function (mitigate the consequences of a previously evaluated

accident) is also unaffected. This capability was demonstrated not only by the tests conducted in the EDG manufacturer's plant, but continue to be demonstrated by surveillance testing performed at the station.

This testing verifies specific design criteria, which assure continued EDG operability even during testing. Examples of presently performed Technical Specification testing that demonstrate the ability and capability of the EDG to perform its safety functions are:

- SR 4.8.1.1.2. d. 2 requires, in part, that on a load rejection of greater than 820 KW, the voltage and frequency be restored to acceptable values within 4 seconds.
- This surveillance demonstrates the ability of the EDGs to withstand a loss of load, as it would occur in a normal safeguards equipment controller (SEC) actuation, without compromising its ability to be ready to accept a new loading sequence and carry its design safety function.
- SR 4.8.1.1.2. d. 9 requires, in part, that with the EDG operating in a test mode (connected to its bus), a simulated safety injection signal overrides the test mode by (1) returning the diesel generator to standby operation and (2) automatically energizing the emergency loads with offsite power.

This surveillance demonstrates the ability of the EDGs to be disconnected from the grid, if in a test mode, on an accident signal, and be ready to accept a new loading sequence and carry its design safety function.

- SR 4.8.1.1.2. a. 2 requires, in part, that every 31 days each EDG be demonstrated OPERABLE by synchronizing it to the grid for greater than or equal to 60 minutes.

Note that this proposed amendment request eliminates a discrepancy between the current requirement to perform the 24 hour run during shutdown and SR 4.8.1.1.2.a.2, which would allow a 24 hour run at power.

Additionally, PSE&G performed an assessment of the potentially added risk of an additional 24 hours of on-line EDG testing. The unavailability of all three EDGs was increased in the Probabilistic Safety Analyses (PSA) for both Salem Units 1 and 2 to correspond to an additional 24 hours per cycle out-of-service time each 18-month operating cycle. The unavailability was changed from 1.86E–02/year to 2.0E–2/year. The increase in the baseline internal events core damage frequency (CDF) was determined to be 1.6E–07 events/year for both Salem Units 1 and 2. Based on the definition provided in Regulatory Guide 1.174, Paragraph 2.2.4, this increase is considered a very small increase in risk (less than 1.0E–06 events/year).

Therefore, the proposed amendment, including proposed administrative controls, does not involve a significant increase in the probability or consequences of an accident previously evaluated.

2. The proposed change does not create the possibility of a new or different kind of accident from any accident previously evaluated.

The proposed amendment to Technical Specification Surveillance Requirement 4.8.1.1.2.d.7 (24-hour endurance run test) to eliminate the restriction to perform the test during shutdown conditions does not physically modify the facility, introduce a new failure mode, or propose a different operational mode of the AC electrical power sources, or Emergency Diesel Generators.

Therefore, the proposed amendment will not create the possibility of a new or different kind of accident from any previously evaluated.

3. The proposed change does not involve a significant reduction in a margin of safety.

The AC Electrical distribution system has been designed to provide sufficient redundancy and reliability to ensure the availability of the EDGs to provide the required safety function under design basis events to protect the power plant, the public and plant personnel. Specifically, the ability of the EDGs to separate from the off-site power source has been designed and tested per Technical Specifications requirements.

Performance of the 24-hour endurance run during power operations will not affect the availability of any of the required power sources, nor the capability of the EDGs to perform their intended safety function. Furthermore, performing the test when the undervoltage protection of the 4160–V vital buses required by the Salem Station Technical Specification 3.3.2.1 is operable, provides for an added level of protection to the EDG that is not available while shutdown.

Therefore, the proposed change does not involve a significant reduction in a margin of safety.

The NRC staff has reviewed the licensee's analysis and, based on this review, it appears that the three standards of 10 CFR 50.92(c) are satisfied. Therefore, the NRC staff proposes to determine that the amendment request involves no significant hazards consideration.

Local Public Document Room location: Salem Free Public Library, 112 West Broadway, Salem, NJ 08079.

Attorney for licensee: Jeffrie J. Keenan, Esquire, Nuclear Business Unit—N21, P.O. Box 236, Hancocks Bridge, NJ 08038.

NRC Section Chief: James W. Clifford.

Tennessee Valley Authority, Docket Nos. 50–327 and 50–328, Sequoyah Nuclear Plant, Units 1 and 2, Hamilton County, Tennessee

Date of application for amendments: August 30, 1999 (TS 99–08).

Brief description of amendments: The proposed amendments would change the Sequoyah (SQN) Technical Specification (TS) requirements to provide alternatives to the requirement of actually measuring response times.

Basis for proposed no significant hazards consideration determination: As required by 10 CFR 50.91(a), Tennessee Valley Authority (TVA), the licensee, has provided its analysis of the issue of no significant hazards consideration, which is presented below:

A. The proposed amendment does not involve a significant increase in the probability or consequences of an accident previously evaluated.

This change to the TS does not result in a condition where the design, material, and construction standards that were applicable prior to the change are altered. The same RTS [Reactor Trip System] and engineered safety feature actuation system (ESFAS) instrumentation is being used, the time response allocations/modeling assumptions in the [Final Safety Analysis Report] Chapter 15 analyses are still the same, only the method of verifying time response is changed. The proposed change will not modify any system interface and could not increase the likelihood of an accident since these events are independent of this change. The proposed activity will not change, degrade or prevent actions, or alter any assumptions previously made in evaluating the radiological consequences of an accident described in the Final Safety Analysis Report. Therefore, the proposed amendment does not involve a significant increase in the probability or consequences of an accident previously evaluated.

B. The proposed amendment does not create the possibility of a new or different kind of accident from any accident previously evaluated.

This change does not alter the performance of pressure [or] differential pressure transmitters, solid state protection system racks, nuclear instrumentation, or input and output master/slave relays used in the plant protection systems. Applicable sensors, solid state protection system (SSPS) racks, nuclear instrumentation, and relays will still have response time verified by test prior to placing the equipment in operational service and after any maintenance that could affect the response time of that equipment. Changing the method of periodically verifying instrument response time for certain instruments from RTT [Response Time Test] to calibration and channel checks or functional test will not create any new accident initiators or scenarios. Therefore, the proposed amendment does not involve a significant increase in the probability or consequences of an accident previously evaluated.

C. The proposed amendment does not involve a significant reduction in a margin of safety.

This change does not affect the total system response time assumed in the safety analysis. The periodic system response time verification method for selected pressure and pressure differential sensors and SSPS racks, nuclear instrumentation, or logic systems is modified to allow use of actual test data or engineering data (various Westinghouse WCAPs [topical reports]). The method of verification still provides assurance that the total system response time is within that assumed in the safety analysis, since calibration checks and functional tests will detect any degradation which might significantly affect equipment response time. Therefore, the proposed license amendment request does not result in a significant reduction in margin of safety.

The NRC has reviewed the licensee's analysis and, based on this review, it appears that the three standards of 10 CFR 50.92(c) are satisfied. Therefore, the NRC staff proposes to determine that the amendment request involves no significant hazards consideration.

Local Public Document Room location: Chattanooga-Hamilton County Library, 1001 Broad Street, Chattanooga, Tennessee 37402.

Attorney for licensee: General Counsel, Tennessee Valley Authority, 400 West Summit Hill Drive, ET 10H, Knoxville, Tennessee 37902.

NRC Section Chief: Sheri R. Peterson.

Tennessee Valley Authority, Docket Nos. 50–327 and 50–328, Sequoyah Nuclear Plant, Units 1 and 2, Hamilton County, Tennessee

Date of application for amendments: August 30, 1999 (TS 99–10).

Brief description of amendments: The proposed amendments would change the Sequoyah (SQN) Technical Specifications (TS) to provide clarification to the requirements for containment isolation valves.

Basis for proposed no significant hazards consideration determination: As required by 10 CFR 50.91(a), Tennessee Valley Authority (TVA), the licensee, has provided its analysis of the issue of no significant hazards consideration, which is presented below:

A. The proposed amendment does not involve a significant increase in the probability or consequences of an accident previously evaluated.

The proposed revisions enhance the technical specification (TS) requirements to provide greater consistency with the standard TS in NUREG–1431. This revision proposes changes to the requirements for containment isolation valves in Specifications 3.6.3. A proposed revision relocates a surveillance requirement (SR) from SQN TS 3.6.1.1, ''Containment Integrity'' to SQN TS 3.6.3, ''Containment Isolation Valves.'' A proposed revision to TS 3.6.3, Action (a), a new Action (b), and a proposed revision to SR 4.6.3.2 provide improvements to the existing TS requirements. The proposed revisions are not the result of changes to plant equipment, system design, testing methods, or operating practices. The modified requirements will allow some relaxation of current action requirements, and SRs. These changes provide more appropriate requirements in consideration of the safety significance and the design capabilities of the plant as determined by the improved standard TS industry effort. SQN TS 3.6.3, ''Containment Isolation Valves,'' continues to provide controls to ensure these valves isolate within the time limits assumed in the safety analyses. Operability of these valves continues to assure that the containment isolation function assumed in the safety analyses is maintained. Since these proposed revisions will continue to support the required safety functions without modification of the plant features, the probability of an accident is not increased.

The provisions proposed in this change request will continue to maintain an acceptable level of protection for the health and safety of the public and will not significantly impact the potential for the offsite release of radioactive products. The overall effect of the proposed change will result in specifications that have equivalent or improved requirements compared to existing specifications for containment isolation valve operability and will not significantly increase the consequences of an accident.

B. The proposed amendment does not create the possibility of a new or different kind of accident from any accident previously evaluated.

The proposed revisions are not the result of changes to plant equipment, system design, testing methods, or operating practices. The modified requirements will allow some relaxation of current action requirements, and a SR consistent with NUREG–1431. These changes provide more appropriate requirements in consideration of the safety significance and the design capabilities of SQN's containment isolation system. The specifications for containment isolation valves serve to provide controls for maintaining the containment pressure boundary. TVA's proposed changes does not contribute to the generation of postulated accidents. Since the function of the containment isolation valves and their associated systems remains unchanged, and the effects do not contribute to accident generation, the proposed changes will not create the possibility of a new or different kind of accident.

C. The proposed amendment does not involve a significant reduction in a margin of safety.

The proposed changes will not result in changes to system design or setpoints that are intended to ensure timely identification of plant conditions that could be precursors to accidents or potential degradation of accident mitigation systems. Operability requirements for SQN's containment isolation valves remain unchanged. TVA's proposed revisions provide some relaxation and flexibility to existing actions and a SR; however, the addition of a new action requirement for a 31-day periodic verification of valve position provides conservative administrative controls to ensure containment isolation function is maintained. The action times are acceptable considering the redundant features of containment penetration flow paths and the allowed time intervals that have been developed by the industry and NRC.

TVA's revisions will continue to provide the necessary actions to minimize the impact of inoperable containment isolation valves and will provide testing activities that will ensure containment isolation system operability. The setpoints and design features that support the margin of safety are unchanged and actions for inoperable systems continue to provide appropriate time limits and compensatory measures. Accordingly, the proposed changes will not significantly reduce the margin of safety.

The NRC has reviewed the licensee's analysis and, based on this review, it appears that the three standards of 10 CFR 50.92(c) are satisfied. Therefore, the NRC staff proposes to determine that the amendment request involves no significant hazards consideration.

Local Public Document Room location: Chattanooga-Hamilton County Library, 1001 Broad Street, Chattanooga, Tennessee 37402.

Attorney for licensee: General Counsel, Tennessee Valley Authority, 400 West Summit Hill Drive, ET 10H, Knoxville, Tennessee 37902.

NRC Section Chief: Sheri R. Peterson.

Tennessee Valley Authority, Docket Nos. 50–327 and 50–328, Sequoyah Nuclear Plant, Units 1 and 2, Hamilton County, Tennessee

Date of application for amendments: August 30, 1999 (TS 99–11).

Brief description of amendments: The proposed amendments would add Sequoyah (SQN) Technical Specification (TS) 3.0.7 to address the use of interim provisions upon discovery of unintended TS action.

Basis for proposed no significant hazards consideration determination: As required by 10 CFR 50.91(a), Tennessee Valley Authority (TVA), the licensee, has provided its analysis of the issue of no significant hazards consideration, which is presented below:

A. The proposed amendment does not involve a significant increase in the probability or consequences of an accident previously evaluated.

TVA proposes the addition of a new definition and limiting condition for operation (LCO) that will allow the interim correction of erroneous TS requirements until NRC's review of an amendment request is completed. This allowance will only apply to those errors that are clearly in conflict with the intended purpose of the TS requirement. The proposed revision will not alter any plant equipment or operating practices or deviate from the intended application of the TS requirements. Therefore, the probability of an accident is not increased by this revision. Likewise, the consequences of an accident is not increased because the proposed allowance will maintain the underlying intent of the TS requirements, the plant licensing basis, and plant nuclear safety.

B. The proposed amendment does not create the possibility of a new or different kind of accident from any accident previously evaluated.

The proposed revision to the SQN TSs will not alter plant equipment or operating practices. The intent of the TS requirements will be maintained to ensure the assumed initial conditions for accidents and the availability of mitigation systems in the event of an postulated accident. The proposed addition will not promote activities that have

the potential to generate accidents. Therefore, the proposed revision will not create the possibility of an accident of a new or different kind.

C. The proposed amendment does not involve a significant reduction in a margin of safety.

TVA's proposed revision to add an allowance to correct erroneous TS requirements will not alter plant systems or those setpoints and limits that are use[d] to maintain safety functions. Any corrections implemented in accordance with the proposed allowance will be consistent with the underlying intent of the TSs. TVA will pursue timely correction of such errors through the license amendment process while temporarily utilizing the corrected requirement. This will ensure that inadequate TS requirements are resolved with NRC in an acceptable time interval. Implementation of the proposed revision will enhance the ability to maintain the licensing basis and safety features of the plant without the need for unnecessary unit shutdowns or regulatory activities. Therefore, the proposed revision maintains the plant safety features without the reduction of any margin of safety.

The NRC has reviewed the licensee's analysis and, based on this review, it appears that the three standards of 10 CFR 50.92(c) are satisfied. Therefore, the NRC staff proposes to determine that the amendment request involves no significant hazards consideration.

Local Public Document Room location: Chattanooga-Hamilton County Library, 1001 Broad Street, Chattanooga, Tennessee 37402.

Attorney for licensee: General Counsel, Tennessee Valley Authority, 400 West Summit Hill Drive, ET 10H, Knoxville, Tennessee 37902.

NRC Section Chief: Sheri R. Peterson

Union Electric Company, Docket No. 50–483, Callaway Plant, Unit 1, Callaway County, Missouri

Date of application request: September 8, 1999.

Description of amendment request: The amendment will authorize revisions to the Final Safety Analysis Report (FSAR) to reflect increases in the radiological dose consequences in the Callaway FSAR for the steam generator tube rupture (SGTR) and main steam line break (MSLB) accidents.

Basis for proposed no significant hazards consideration determination: As required by 10 CFR 50.91(a), the licensee has provided its analysis of the issue of no significant hazards consideration, which is presented below:

1. The proposed change does not involve a significant increase in the probability or consequences of an accident previously evaluated.

This change increases the offsite dose consequences for the MSLB and SGTR accidents reported in FSAR Sections 15.1 and 15.6. Non-conservative assumptions regarding letdown flow rate, iodine isotopic mix in the source term, resin effeciency, and termination of the flash release pathway were identified in the SGTR and MSLB radiological consequence analyses. The correction of these non-conservative assumptions results in an increase in the radiological consequences reported in FSAR Tables 15.1–4 and 15.6–5. However, these increases are not significant since the new values remain less than the 10 CFR 100.11 regulatory requirements and the guideline values provided by the Standard Review Plan [NUREG–0800].

There will be no increase in the probability of previously evaluated accidents. This change only involves the modeling and calculation of the SGTR and MSLB radiological consequences. [There are no equipment or system changes.] Protection system performance will remain within the assumptions of the previously performed accident analyses since no hardware changes are proposed. The protection systems will continue to function in a manner consistent with the plant design basis. The proposed change will not affect the probability of any event initiators nor will the proposed change affect the ability of any safety-related equipment to perform its intended function. There will be no degradation in the performance of, nor an increase in the number of challenges imposed on, safety-related equipment assumed to function during an accident situation. There will be no change to normal plant operating parameters or accident mitigation performance.

Therefore, the proposed change does not involve a significant increase in the probability or consequences of an accident previously evaluated.

2. The proposed change does not create the possibility of a new or different kind of accident from any accident previously evaluated.

This change is the result of a re-analysis of the MSLB and SGTR radiological consequences. These accidents were previously analyzed in the FSAR. None of the changes in the dose calculation modeling create the possibility of a new or different kind of accident.

There are no hardware changes associated with this amendment application nor are there any changes in the method by which any safety-related plant system performs its safety function. The change will not affect the normal method of plant operation, other than the imposition of administrative limits on the concentrations of I–134 [Iodine-134] and Dose Equivalent I–131 until this amendment application is approved by NRC. No new accident scenarios, transient precursors, failure mechanisms, or limiting single failures are introduced as a result of this change. There will be no adverse effect or challenges imposed on any safety-related system as a result of this change.

Therefore, the proposed change does not create the possibility of a new or different kind of accident from any previously evaluated.

3. The proposed change does not involve a significant reduction in a margin of safety.

The re-analysis of the MSLB and SGTR radiological consequences, and the resultant increase in consequences reported in FSAR Tables 15.1–4 and 15.6–5, ensures that the accident analyses support the plant operating conditions allowed by current Technical Specification 3.4.8, Reactor Coolant System Specific Activity (ITS [Improved Technical Specification] 3.4.16), and current Technical Specification 3.7.1.4, Plant Systems Specific Activity (ITS 3.7.18).

The proposed change does not affect the acceptance criteria for any analyzed event nor is there a change to any Safety Analysis Limit (SAL). There will be no effect on the manner in which safety limits or limiting safety system settings are determined nor will there be any effect on those plant systems necessary to assure the accomplishment of protection functions. There will be no impact on the overpower limit, DNBR [departure from nucleate boiling ratio], F_Q [heat flux hot channel factor], FdeltaH [nuclear enthalpy rise hot channel factor], LOCA PCT [peak cladding temperature for the loss-of-coolant accident], peak local power density, or any other margin of safety. The radiological dose consequence acceptance criteria listed in the Standard Review Plan continue to be met.

Therefore, the proposed change does not involve a significant reduction in any margin of safety.

The NRC staff has reviewed the licensee's analysis and, based on this review, it appears that the three standards of 50.92(c) are satisfied. Therefore, the NRC staff proposes to determine that the amendment request involves no significant hazards consideration.

Local Public Document Room location: Elmer Ellis Library, University of Missouri, Columbia Missouri 65201.

Attorney for licensee: John O'Neill, Esq., Shaw, Pittman, Potts & Trowbridge, 2300 N Street, NW, Washington, DC 20037.

NRC Section Chief: Stephen Dembek.

Previously Published Notices of Consideration of Issuance of Amendments to Facility Operating Licenses, Proposed no Significant Hazards Consideration Determination, and Opportunity for a Hearing

The following notices were previously published as separate individual notices. The notice content was the same as above. They were published as individual notices either because time did not allow the Commission to wait for this biweekly notice or because the action involved exigent circumstances. They are repeated here because the biweekly notice lists all amendments issued or proposed to be issued involving no significant hazards consideration.

For details, see the individual notice in the **Federal Register** on the day and

page cited. This notice does not extend the notice period of the original notice.

Indiana Michigan Power Company, Docket Nos. 50–315 and 50–316, Donald C. Cook Nuclear Plant, Units 1 and 2, Berrien County, Michigan

Date of amendment requests: September 14, 1998.

Description of amendment requests: The proposed amendments would change the runout limits for a safety injection (SI) pump to 675 gallons per minute (gpm), unless the pump is specifically tested to a higher flow rate, not exceeding 700 gpm for both Units 1 and 2. This change was initiated upon reevaluation of correspondence from Westinghouse sent to the licensee in 1991, which indicated that the generic runout limits for Pacific 2'' JTCH pumps was 675 gpm unless each specific pump is tested to a higher flow rate. Individual testing is necessary due to test variations between pumps which may limit the applicability of testing of one pump to another pump due to manufacturing tolerances in the sand cast impellers and material changes in the pump casing.

Furthermore, the bases section is being clarified to describe why the injection rather than the recirculation mode during flow balancing is the minimum resistance and, consequently, more conservative configuration for runout considerations.

Date of publication of individual notice in **Federal Register**: August 31, 1999 (64 FR 47533).

Expiration date of individual notice: September 30, 1999

Local Public Document Room location: Maud Preston Palenske Memorial Library, 500 Market Street, St. Joseph, MI 49085.

Date of publication of individual notice in **Federal Register**: August 31, 1999 (64 FR 47533).

Expiration date of individual notice: September 30, 1999.

Local Public Document Room location: Maud Preston Palenske Memorial Library, 500 Market Street, St. Joseph, MI 49085.

Michigan Power Company, Docket, Nos. 50–315 and 50–316, Donald C. Cook Nuclear Plant, Units 1 and 2, Berrien County, Michigan

Date of application for amendments: October 8, 1998.

Brief description of amendments: The amendments would revise Technical Specification (TS) 3.3.3.8 for Unit 1 and TS 3.3.3.6 for Unit 2, ''Post-Accident Instrumentation.'' The proposed changes to the TSs will place tighter restrictions on the amount of time the refueling water storage tank (RWST) water level instrumentation may be inoperable before the limiting conditions for operation in the TSs are applied.

Date of publication of individual notice in **Federal Register**: August 31, 1999 (64 FR 47532).

Expiration date of individual notice: September 30, 1999.

Local Public Document Room location: Maud Preston Palenske Memorial Library, 500 Market Street, St. Joseph, MI 49085.

Indiana Michigan Power Company, Docket, Nos. 50–315 and 50–316, Donald C. Cook Nuclear Plant, Units 1 and 2, Berrien County, Michigan

Date of application for amendments: December 3, 1998.

Brief description of amendments: The amendments would make administrative changes to several Technical Specifications to remove obsolete information, provide consistency between Unit 1 and Unit 2, provide consistency with the Standard Technical Specifications, provide clarification, and correct typographical errors.

Date of publication of individual notice in **Federal Register**: August 31, 1999 (64 FR 47535).

Expiration date of individual notice: September 30, 1999.

Local Public Document Room location: Maud Preston Palenske Memorial Library, 500 Market Street, St. Joseph, MI 49085.

Indiana Michigan Power Company, Docket, Nos. 50–315 and 50–316, Donald C. Cook Nuclear Plant, Units 1 and 2, Berrien County, Michigan

Date of application for amendments: May 21, 1999.

Brief description of amendments: The amendments would change the Technical Specifications (T/S) to allow reactor coolant system temperature changes in certain Mode 5 and 6 action statements if the shutdown margin is sufficient to accommodate the expected temperature change. In addition, footnotes regarding additions of water from the refueling water storage tank to the reactor coolant system are clarified and relocated to action statements. Additional actions are added in Table 3.3–1, ''Reactor Trip System Instrumentation,'' when the required source range neutron flux channel is inoperable. Corresponding changes are proposed for the bases for T/S 3/4.1.1, ''Boration Control,'' and T/S 3/4.1.2, ''Boration Systems.'' Administrative changes are proposed to improve clarity. Finally, additions are made to shutdown margin T/S surveillance requirements to address use of a boron penalty (requirement for additional boron) during residual heat removal system operation in Modes 4 and 5.

Date of publication of individual notice in **Federal Register**: July 12, 1999 (64 FR 37574).

Expiration date of individual notice: August 11, 1999.

Local Public Document Room location: Maud Preston Palenske Memorial Library, 500 Market Street, St. Joseph, MI 49085.

Notice of Issuance of Amendments to Facility Operating Licenses

During the period since publication of the last biweekly notice, the Commission has issued the following amendments. The Commission has determined for each of these amendments that the application complies with the standards and requirements of the Atomic Energy Act of 1954, as amended (the Act), and the Commission's rules and regulations. The Commission has made appropriate findings as required by the Act and the Commission's rules and regulations in 10 CFR Chapter I, which are set forth in the license amendment.

Notice of Consideration of Issuance of Amendment to Facility Operating License, Proposed No Significant Hazards Consideration Determination, and Opportunity for A Hearing in connection with these actions was published in the **Federal Register** as indicated.

Unless otherwise indicated, the Commission has determined that these amendments satisfy the criteria for categorical exclusion in accordance with 10 CFR 51.22. Therefore, pursuant to 10 CFR 51.22(b), no environmental impact statement or environmental assessment need be prepared for these amendments. If the Commission has prepared an environmental assessment under the special circumstances provision in 10 CFR 51.12(b) and has made a determination based on that assessment, it is so indicated.

For further details with respect to the action see (1) the applications for amendment, (2) the amendment, and (3) the Commission's related letter, Safety Evaluation and/or Environmental Assessment as indicated. All of these items are available for public inspection at the Commission's Public Document Room, the Gelman Building, 2120 L Street, NW., Washington, DC, and at the local public document rooms for the particular facilities involved.

Carolina Power & Light Company, et al., Docket No. 50–400, Shearon Harris Nuclear Power Plant, Unit 1, Wake and Chatham Counties, North Carolina

Date of application for amendment: September 23, 1998, as supplemented on December 7, 1998, and August 10, 1999.

Brief description of amendment: This amendment revises Technical Specification (TS) 3/4.6.1.3, ''Containment Air Locks,'' and its associated bases, to clarify the requirements for locking an air lock door shut and to make it consistent with NUREG–1431, Revision 1, ''Standard Technical Specifications, Westinghouse Plants,'' dated April 1995.

Date of issuance: September 14, 1999.

Effective date: September 14, 1999.

Amendment No.: 90.

Facility Operating License No. NPF–63. Amendment revises the Technical Specifications

Date of initial notice in Federal Register: October 21, 1998 (63 FR 56239)

The December 7, 1998, and August 10, 1999, submittals contained clarifying information only, and did not change the initial no significant hazards consideration determination.

The Commission's related evaluation of the amendment is contained in a Safety Evaluation dated September 14, 1999.

No significant hazards consideration comments received: No.

Local Public Document Room location: Cameron Village Regional Library, 1930 Clark Avenue, Raleigh, North Carolina 27605.

Carolina Power & Light Company, et al., Docket No. 50–400, Shearon Harris Nuclear Power Plant, Unit 1, Wake and Chatham Counties, North Carolina

Date of application for amendment: June 15, 1999.

Brief description of amendment: This amendment changes the Technical Specifications to incorporate the performance-based 10 CFR 50 Appendix J, Option B for Type A tests (containment integrated leakage rate tests). Option B will be implemented for Type A testing in accordance with NRC Regulatory Guide 1.163, ''Performance-Based Containment Leak-Test Program,'' dated September 1995, and Nuclear Energy Institute (NEI) Guideline 94–01, Revision 0, ''Industry Guideline for Implementing Performance-Based Option of 10 CFR Part 50, Appendix J,'' dated July 26, 1995. Type B and C testing (containment penetration leakage tests) will continue to be performed in accordance with 10 CFR 50 Appendix J, Option A.

Date of issuance: September 17, 1999.

Effective date: September 17, 1999.

Amendment No.: 91.

Facility Operating License No. NPF–63. Amendment revises the Technical Specifications.

Date of initial notice in **Federal Register**: July 14, 1999 (64 FR 38023). The Commission's related evaluation of the amendment is contained in a Safety Evaluation dated September 17, 1999.

No significant hazards consideration comments received: No.

Local Public Document Room location: Cameron Village Regional Library, 1930 Clark Avenue, Raleigh, North Carolina 27605.

Commonwealth Edison Company, Docket Nos. STN 50–456 and STN 50–457, Braidwood Station, Unit Nos. 1 and 2, Will County, Illinois

Date of application for amendments: July 30, 1999.

Brief description of amendments: The amendments changed the maximum allowable temperature of the ultimate heat sink in the technical specifications from 98 degrees Fahrenheit to 100 degrees Fahrenheit. The change is in effect from the date of this amendment until September 30, 1999.

Date of issuance: September 8, 1999.

Effective date: Immediately, to be implemented within 30 days.

Amendment Nos.: 103 and 103.

Facility Operating License Nos. NPF–72 and NPF–77: The amendments revised the Technical Specifications.

Public comments requested as to proposed no significant hazards consideration: Yes (64 FR 44962 dated August 18, 1999). The notice provided an opportunity to submit comments on the Commission's proposed no significant hazards consideration determination. No comments have been received. The notice also provided for an opportunity to request a hearing by September 17, 1999, but indicated that if the Commission makes a final no significant hazards consideration determination any such hearing would take place after issuance of the amendments. The Commission's related evaluation of the amendments, finding of exigent circumstances and final no significant hazards consideration determination are contained in a Safety Evaluation dated September 8, 1999.

Local Public Document Room location: Wilmington Public Library, 201 S. Kankakee Street, Wilmington, Illinois 60481.

Commonwealth Edison Company, Docket Nos. 50–237 and 50–249, Dresden Nuclear Power Station, Units 2 and 3, Grundy County, Illinois

Date of application for amendments: May 3, 1999, as supplemented by letter dated September 10, 1999.

Brief description of amendments: The amendments relocated the requirements of Technical Specification (TS) Section 3/4.6.I to the Updated Final Safety Analysis Report (UFSAR). TS Section 3/4.6.I contains reactor coolant chemistry limiting conditions for operation (LCO) and surveillance requirements (SR) for conductivity, chloride concentration, and pH.

Date of issuance: September 23, 1999.

Effective date: Immediately, to be implemented within 30 days including relocation of the removed TSs and associated bases to the licensee's UFSAR pending change file. In addition, the licensee shall include the relocated information in the UFSAR submitted to the NRC, pursuant to 10 CFR 50.71(e), except for any information that has been changed in accordance with 10 CFR 50.59 and described in the change summaries submitted to NRC pursuant to 10 CFR 50.59.

Amendment Nos.: 173 & 169.

Facility Operating License Nos. DPR–19 and DPR–25: The amendments revised the Technical Specifications.

Date of initial notice in Federal Register: August 11, 1999 (64 FR 43768). The September 10, 1999, submittal provided additional clarifying information that did not change the initial proposed no significant hazards consideration determination.

The Commission's related evaluation of the amendments is contained in a Safety Evaluation dated September 23, 1999.

No significant hazards consideration comments received: No.

Local Public Document Room location: Morris Area Public Library District, 604 Liberty Street, Morris, Illinois 60450.

Commonwealth Edison Company, Docket Nos. 50–254 and 50–265, Quad Cities Nuclear Power Station, Units 1 and 2, Rock Island County, Illinois

Date of application for amendments: June 29, 1999.

Brief description of amendments: The amendments increased the notch testing surveillance interval of partially withdrawn control rods in Technical Specification Surveillance Requirement 3/4.3.C, ''Reactivity Control—Control Rod Operability,'' from an interval of once in 7 days to once in 31 days.

Date of issuance: September 23, 1999.

Effective date: Immediately, to be implemented within 60 days.

Amendment Nos.: 190 & 187.

Facility Operating License Nos. DPR–29 and DPR–30: The amendments revised the Technical Specifications.

Date of initial notice in Federal Register: July 28, 1999 (64 FR 40905).

The Commission's related evaluation of the amendments is contained in a Safety Evaluation dated September 23, 1999.

No significant hazards consideration comments received: No.

Local Public Document Room location: Dixon Public Library, 221 Hennepin Avenue, Dixon, Illinois 61021.

Duke Energy Corporation, Docket Nos. 50–269, 50–270, and 50–287, Oconee Nuclear Station, Units 1, 2, and 3, Oconee County, South Carolina

Date of application of amendments: May 24, 1999

Brief description of amendments: The amendments revise the maximum local fuel pin centerline temperature safety limit in Technical Specification 2.1.1.1 from the limit determined using the TACO2 fuel performance computer code to the value determined using a newer TACO3 computer code.

Date of Issuance: September 24, 1999.

Effective date: As of the date of issuance and shall be implemented within 30 days from the date of issuance.

Amendment Nos.: Unit 1—306, Unit 2—306, Unit 3—306.

Facility Operating License Nos. DPR–38, DPR–47, and DPR–55: Amendments revised the Technical Specifications.

Date of initial notice in Federal Register: June 30, 1999 (64 FR 35203).

The Commission's related evaluation of the amendments is contained in a Safety Evaluation dated September 24, 1999.

No significant hazards consideration comments received: No.

Local Public Document Room location: Oconee County Library, 501 West South Broad Street, Walhalla, South Carolina.

Duke Energy Corporation, et al., Docket Nos. 50–413 and 50–414, Catawba Nuclear Station, Units 1 and 2, York County, South Carolina.

Date of application for amendments: July 22, 1998, and supplemented by letters dated October 22, 1998, January 28, May 6, June 24, August 17 and September 15, 1999.

Brief description of amendments: The amendments revise various sections of the Technical Specifications (Appendix A of the Catawba operating licenses) to permit use of Westinghouse's Robust Fuel Assemblies for future core reloads.

Date of issuance: September 22, 1999.

Effective date: As of the date of issuance and shall be implemented prior to beginning the installation of the Westinghouse fuel, currently projected to be Fuel Cycle 13 and 11 for Units 1 and 2, respectively.

Amendment Nos.: Unit 1—180; Unit 2—172.

Facility Operating License Nos. NPF–35 and NPF–52: Amendments revised the Technical Specifications.

Date of initial notice in Federal Register: November 18, 1998 (63 FR 64108); May 19, 1999 (64 FR 27317); August 11, 1999 (64 FR 43770) The Commission's related evaluation of the amendments is contained in a Safety Evaluation dated September 22, 1999.

No significant hazards consideration comments received: No

Local Public Document Room location: York County Library, 138 East Black Street, Rock Hill, South Carolina.

Duke Energy Corporation, et al., Docket Nos. 50–369 and 50–370, McGuire Nuclear Station, Units 1 and 2, Mecklenberg County, North Carolina

Date of application for amendments: July 22, 1998, and supplemented by letters dated October 22, 1998, and January 28, May 6, June 24, August 17 and September 15, 1999

Brief description of amendments: The amendments revise various sections of the Technical Specifications (Appendix A of the McGuire operating licenses) to permit use of Westinghouse's Robust Fuel Assemblies for future core reloads.

Date of issuance: September 22, 1999.

Effective date: As of the date of issuance and shall be implemented prior to beginning the installation of the Westinghouse fuel, currently projected to be Fuel Cycle 15 and 14 for Units 1 and 2, respectively.

Amendment Nos.: Unit 1—188; Unit 2—169.

Facility Operating License Nos. NPF–9 and NPF–17: Amendments revised the Technical Specifications.

Date of initial notice in Federal Register: August 11, 1999 (64 FR 43771); June 30, 1999 (64 FR 35202); December 16, 1998 (64 FR 69388)

The Commission's related evaluation of the amendments is contained in a Safety Evaluation dated September 22, 1999.

No significant hazards consideration comments received: No

Local Public Document Room location: J. Murrey Atkins Library, University of North Carolina at Charlotte, 9201 University City Boulevard, Charlotte, North Carolina

Entergy Operations, Inc., Docket No. 50–313, Arkansas Nuclear One, Unit No. 1, Pope County, Arkansas

Date of amendment request: April 9, 1999, as supplemented by letter dated July 29, 1999

Brief description of amendment: The amendment revises the requirements associated with the station batteries and the direct current (DC) sources to the 125 volt DC switchyard distribution system.

Date of issuance: September 14, 1999.

Effective date: As of the date of issuance and shall be implemented within 45 days from the date of issuance (including issuance of the Technical Requirements Manual for use by licensee personnel).

Amendment No.: 200.

Facility Operating License No. DPR–51: Amendment revised the Technical Specifications.

Date of initial notice in Federal Register: May 19, 1999 (64 FR 27321).

The July 29, 1999, letter provided clarifying and additional information that did not change the initial proposed no significant hazards consideration determination.

The Commission's related evaluation of the amendment is contained in a Safety Evaluation dated September 14, 1999.

No significant hazards consideration comments received: No.

Local Public Document Room location: Tomlinson Library, Arkansas Tech University, Russellville, Arkansas 72801.

Entergy Operations, Inc., Docket No. 50–313, Arkansas Nuclear One, Unit No. 1, Pope County, Arkansas

Date of amendment request: June 1, 1999, as supplemented by letters dated July 29 and August 19, 1999.

Brief description of amendment: The amendment revised the Technical Specifications to allow, under specific conditions, certain once-through steam generator (OTSG) tubes with tube end crack indications adjacent to the primary cladding region of the upper and lower OTSG tubesheets to remain in service.

Date of issuance: September 14, 1999.

Effective date: As of the date of issuance and shall be implemented prior to reactor startup after refueling outage 1R15.

Amendment No.: 201.

Facility Operating License No. DPR–51: Amendment revised the Technical Specifications.

Date of initial notice in Federal Register: June 30, 1999 (64 FR 35205).

The July 29 and August 19, 1999, letters provided clarifying information

that did not change the scope of the June 1, 1999, application and the initial proposed no significant hazards consideration determination.

The Commission's related evaluation of the amendment is contained in a Safety Evaluation dated September 14, 1999.

No significant hazards consideration comments received: No

Local Public Document Room location: Tomlinson Library, Arkansas Tech University, Russellville, Arkansas 72801.

Florida Power Corporation, et al., Docket No. 50–302, Crystal River Nuclear Generating Plant, Unit 3, Citrus County, Florida

Date of application for amendment: May 17, 1999.

Brief description of amendment: The amendment changes Technical Specification Section 3.3.8, ''Emergency Diesel Generator Loss of Power Start,'' Surveillance Requirement 3.3.8.1 and corresponding basis section. The surveillance is revised to make a note included in the surveillance consistent with the method of performing the surveillance.

Date of issuance: September 13, 1999.

Effective date: September 13, 1999.

Amendment No.: 187.

Facility Operating License No. DPR–72: Amendment revised the Technical Specifications.

Date of initial notice in Federal Register: July 14, 1999 (64 FR 38026).

The Commission's related evaluation of the amendment is contained in a Safety Evaluation dated September 13, 1999.

No significant hazards consideration comments received: No.

Local Public Document Room location: Coastal Region Library, 8619 W. Crystal Street, Crystal River, Florida 34428.

GPU Nuclear, Inc. et al., Docket No. 50–219, Oyster Creek Nuclear Generating Station, Ocean County, New Jersey

Date of application for amendment: December 23, 1998.

Brief description of amendment: The proposed amendment revised the surveillance frequency for verifying the operability of motor-operated isolation valves and condensate makeup valves in the Isolation Condenser Technical Specification 4.8.A.1 and Bases page from once per month to once per 3 months.

Date of Issuance: September 24, 1999.

Effective date: Date of issuance and shall be implemented within 30 days of issuance.

Amendment No.: 209.

Facility Operating License No. DPR–16: Amendment revised the Technical Specifications.

Date of initial notice in Federal Register: April 7, 1999 (64 FR 17026).

The Commission's related evaluation of this amendment is contained in a Safety Evaluation dated September 24, 1999.

No significant hazards consideration comments received: No.

Local Public Document Room location: Ocean County Library, Reference Department, 101 Washington Street, Toms River, NJ 08753.

GPU Nuclear, Inc., et al., Docket No. 50–289, Three Mile Island Nuclear Station, Unit No. 1, Dauphin County, Pennsylvania

Date of application for amendment: October 19, 1998, as supplemented August 19, 1999.

Brief description of amendment: The proposed amendment adds operability and surveillance requirements to the Technical Specifications for the remote shutdown system similar to the standard technical specifications for Babcock & Wilcox nuclear plants as described in NUREG–1430.

Date of issuance: September 22, 1999.

Effective date: As of the date of issuance to be implemented within 30 days.

Amendment No.: 216.

Facility Operating License No. DPR–50. Amendment revised the Technical Specifications.

Date of initial notice in Federal Register: November 18, 1998 (63 FR 64118). The August 19, 1999, supplement to the application did not change the staff's proposed no significant hazards consideration determination or expand the scope of the application as originally noticed.

The Commission's related evaluation of the amendment is contained in a Safety Evaluation dated September 22, 1999.

No significant hazards consideration comments received: No.

Local Public Document Room location: Law/Government Publications Section, State Library of Pennsylvania, (Regional Depository) Walnut Street and Commonwealth Avenue, Box 1601, Harrisburg, PA 17105.

IES Utilities Inc., Docket No. 50–331, Duane Arnold Energy Center, Linn County, Iowa

Date of application for amendment: April 30, 1999.

Brief description of amendment: The amendment revises Duane Arnold Energy Center (DAEC) Technical Specification (TS) Surveillance Requirement (SR) 3.4.3.1 to revise the safety function lift setpoint tolerance limits for the main safety valves (SVs) and the safety/relief valves (SRVs).

Date of issuance: September 22, 1999.

Effective date: September 22, 1999, to be implemented within 30 days.

Amendment No.: 228.

Facility Operating License No. DPR–49: The amendment revised the Technical Specifications.

Date of initial notice in Federal Register: July 14, 1999 (64 FR 38028).

The Commission's related evaluation of the amendment is contained in a Safety Evaluation dated September 22, 1999.

No significant hazards consideration comments received: No.

Local Public Document Room location: Cedar Rapids Public Library, 500 First Street, SE., Cedar Rapids, IA 52401.

Niagara Mohawk Power Corporation, Docket No. 50–220, Nine Mile Point Nuclear Station Unit No. 1, Oswego County, New York

Date of application for amendment: May 15, 1998, as supplemented by letters dated September 25, October 13, December 9 (two letters), 1998; January 11, April 1, and April 22, 1999.

Brief description of amendment: This amendment changes Technical Specification (TS) 5.5, ''Storage of Unirradiated and Spent Fuel,'' to reflect a planned modification to increase the storage capacity of the spent fuel pool from 2776 to 4086 fuel assemblies. It also deletes an inappropriate statement and reference within TS 5.5.

Date of issuance: June 17, 1999.

Effective date: This license amendment is effective as of the date of its issuance to be implemented before spent fuel is stored within the new high-density spent fuel rack modules authorized for installation and use by this amendment.

Amendment No.: 167.

Facility Operating License No. DPR–63: Amendment revises the Technical Specifications.

Date of initial notice in Federal Register: November 24, 1998 (63 FR 64973).

The September 25, October 13, December 9 (two letters) 1998, January 11, April 1, and April 22, 1999, letters provided clarifying information that did not change the initial proposed no significant hazards consideration.

The Commission's related evaluation of the amendment is contained in a Safety Evaluation dated June 17, 1999.

No significant hazards consideration comments received: No.

Local Public Document Room location: Reference and Documents

Department, Penfield Library, State University of New York, Oswego, New York 13126.

North Atlantic Energy Service Corporation, et al., Docket No. 50–443, Seabrook Station, Unit No. 1, Rockingham County, New Hampshire

Date of amendment request: June 23, 1999.

Description of amendment request: To revise Technical Specification (TS) 3.7.6.2 to increase the allowable outage time for the Control Room Air Conditioning Subsystem from 30 days to 60 days, on a one-time basis for each train, to allow adequate time to replace portions of the existing system during the current operating cycle, and to exclude the requirements of TS 3.0.4 and TS 4.0.4 during the implementation of the modification.

Date of issuance: September 17, 1999.

Effective date: As of its date of issuance, and shall be implemented within 30 days.

Amendment No.: 62.

Facility Operating License No. NPF–86: Amendment revised the Technical Specifications/License.

Date of initial notice in Federal Register: July 14, 1999 (64 FR 38032).

The Commission's related evaluation of the amendment is contained in a Safety Evaluation dated September 17, 1999.

No significant hazards consideration comments received: No.

Local Public Document Room location: Exeter Public Library, Founders Park, Exeter, NH 03833.

Northeast Nuclear Energy Company, et al., Docket No. 50–336, Millstone Nuclear Power Station, Unit No. 2, New London County, Connecticut

Date of application for amendment: March 17, 1999.

Brief description of amendment: The amendment changes Technical Specifications 3.5.2, ''Emergency Core Cooling Systems—ECCS Subsystems—Tavg ≥300 °F;'' 3.7.1.7, ''Plant Systems—Atmospheric Steam Dump Valves;'' and 3.7.6.1, ''Plant Systems—Control Room Emergency Ventilation System.'' The changes will revise: (1) Surveillance requirements for the Emergency Core Cooling System valves, (2) the atmospheric steam dump valve requirements to focus on the steam release path instead of the individual valves, and (3) the allowed outage time for the atmospheric steam valves and Control Room Emergency Ventilation System. The licensee made changes to the Bases pages consistent with the proposed changes to the TSs.

Date of issuance: August 12, 1999.

Effective date: As of the date of issuance and shall be implemented within 60 days from the date of issuance.

Amendment No.: 238.

Facility Operating License No. DPR–65: Amendment revised the Technical Specifications.

Date of initial notice in Federal Register: April 21, 1999 (64 FR 19559).

The Commission's related evaluation of the amendment is contained in a Safety Evaluation dated August 12, 1999.

No significant hazards consideration comments received: No.

Local Public Document Room location: Learning Resources Center, Three Rivers Community-Technical College, 574 New London Turnpike, Norwich, Connecticut, and the Waterford Library, ATTN: Vince Juliano, 49 Rope Ferry Road, Waterford, Connecticut.

Power Authority of The State of New York, Docket No. 50–286, Indian Point Nuclear Generating Unit No. 3, Westchester County, New York

Date of application for amendment: June 4, 1999.

Brief description of amendment: The amendment makes administrative changes to the Technical Specifications.

Date of issuance: September 14, 1999.

Effective date: As of the date of issuance to be implemented within 30 days.

Amendment No.: 193.

Facility Operating License No. DPR–64: Amendment revises the Technical Specifications.

Date of initial notice in Federal Register: July 28, 1999 (64 FR 40906).

No significant hazards consideration comments received: No.

The Commission's related evaluation of the amendment is contained in a Safety Evaluation dated September 14, 1999.

No significant hazards consideration comments received: No.

Local Public Document Room location: White Plains Public Library, 100 Martine Avenue, White Plains, New York 10610.

Power Authority of The State of New York, Docket No. 50–286, Indian Point Nuclear Generating Unit No. 3, Westchester County, New York

Date of application for amendment: January 28, 1999, as supplemented April 29, 1999, and May 17, 1999. By letters dated April 29, 1999, and May 17, 1999, the licensee revised the original submittal dated January 28, 1999, in response to questions raised by the NRC staff.

Brief description of amendment: The amendment changes the Technical Specifications by reducing the number of emergency diesel generators required to be operable under certain conditions.

Date of issuance: September 14, 1999.

Effective date: As of the date of issuance to be implemented within 30 days.

Amendment No.: 194.

Facility Operating License No. DPR–64: Amendment revises the Technical Specifications.

Date of initial notice in Federal Register: June 2, 1999 (64 FR 29713). This notice superceded a notice dated April 21, 1999 (64 FR 19563).

No significant hazards consideration comments received: No.

The Commission's related evaluation of the amendment is contained in a Safety Evaluation dated September 14, 1999.

No significant hazards consideration comments received: No.

Local Public Document Room location: White Plains Public Library, 100 Martine Avenue, White Plains, New York 10610.

Power Authority of The State of New York, Docket No. 50–286, Indian Point Nuclear Generating Unit No. 3, Westchester County, New York

Date of application for amendment: January 28, 1999, as supplemented July 16, 1999.

Brief description of amendment: The amendment removes lists of containment isolation valves from the Technical Specifications (TSs) and modifies the TSs accordingly.

Date of issuance: September 16, 1999.

Effective date: As of the date of issuance to be implemented within 30 days.

Amendment No.: 195.

Facility Operating License No. DPR–64: Amendment revises the Technical Specifications.

Date of initial notice in Federal Register: May 19, 1999 (64 FR 27323).

The July 16, 1999, submittal did not change the staff's initial proposed finding of no significant hazards considerations.

No significant hazards consideration comments received: No.

The Commission's related evaluation of the amendment is contained in a Safety Evaluation dated September 16, 1999.

No significant hazards consideration comments received: No.

Local Public Document Room location: White Plains Public Library, 100 Martine Avenue, White Plains, New York 10610.

Power Authority of the State of New York, Docket No. 50–333, James A. FitzPatrick Nuclear Power Plant, Oswego County, New York

Date of application for amendment: April 5, 1999.

Brief description of amendment: The proposed changes would revise Appendix A (Section 6.1) and Appendix B (Section 7.1) of the James A. FitzPatrick Technical Specifications. The proposed changes would remove the position title of General Manager from these sections and would state that if the Site Executive Officer is unavailable, he will delegate his responsibilities to another staff member, in writing. In addition the position title of Resident Manager, used in Appendix B, Section 7.1, would be replaced by Site Executive Officer.

Date of issuance: September 13, 1999.

Effective date: As of the date of issuance to be implemented within 30 days.

Amendment No.: 254.

Facility Operating License No. DPR–59: Amendment revised the Technical Specifications and the Environmental Technical Specifications.

Date of initial notice in Federal Register: August 11, 1999 (64 FR 43775).

The Commission's related evaluation of the amendment is contained in a Safety Evaluation dated September 13, 1999.

No significant hazards consideration comments received: No.

Local Public Document Room location: Reference and Documents Department, Penfield Library, State University of New York, Oswego, New York 13126.

Power Authority of the State of New York, Docket No. 50–333, James A. FitzPatrick Nuclear Power Plant, Oswego County, New York

Date of application for amendment: October 8, 1997.

Brief description of amendment: The amendment revises actions in the Technical Specifications to be taken in the event multiple control rods are inoperable.

Date of issuance: September 21, 1999.

Effective date: As of the date of issuance to be implemented within 30 days.

Amendment No.: 255.

Facility Operating License No. DPR–59: Amendment revised the Technical Specifications.

Date of initial notice in Federal Register: February 11, 1998 (63 FR 6991).

The Commission's related evaluation of the amendment is contained in a Safety Evaluation dated September 21, 1999.

No significant hazards consideration comments received: No.

Local Public Document Room location: Reference and Documents Department, Penfield Library, State University of New York, Oswego, New York 13126.

Public Service Electric & Gas Company, Docket No. 50–354, Hope Creek Generating Station, Salem County, New Jersey

Date of application for amendment: December 30, 1998, as supplemented September 13, 1999.

Brief description of amendment: This amendment revises Technical Specification (TS) Limiting Condition for Operation 3.7.3 and TS Table 3.7.3–1. These changes modify the flood protection actions required when severe storm warnings that may affect the site are in effect or during periods of elevated river water level.

Date of issuance: September 17, 1999.

Effective date: As of the date of issuance, and shall be implemented within 60 days.

Amendment No.: 122.

Facility Operating License No. NPF–57: This amendment revised the TSs.

Date of initial notice in Federal Register: February 24, 1999 (64 FR 9200).

The September 13, 1999, supplement provided clarifying information that did not change the initial proposed no significant hazards determination or expand the scope of the initial **Federal Register** notice.

The Commission's related evaluation of the amendment is contained in a Safety Evaluation dated September 17, 1999.

No significant hazards consideration comments received: No.

Local Public Document Room location: Pennsville Public Library, 190 S. Broadway, Pennsville, NJ 08070.

Public Service Electric & Gas Company, Docket No. 50–354, Hope Creek Generating Station, Salem County, New Jersey

Date of application for amendment: May 24, 1999, as supplemented June 21, 1999.

Brief description of amendment: This amendment revises the Technical Specifications (TSs) to correct typographical and editorial errors, and is considered administrative in nature.

Date of issuance: September 21, 1999

Effective date: As of the date of issuance, and shall be implemented within 60 days.

Amendment No.: 123.

Facility Operating License No. NPF–57: This amendment revised the TSs.

Date of initial notice in Federal Register: June 30, 1999 (64 FR 35209).

The June 21, 1999, supplement provided clarifying information that did not change the initial proposed no significant hazards consideration determination or expand the scope of the original **Federal Register** notice.

The Commission's related evaluation of the amendment is contained in a Safety Evaluation dated September 21, 1999.

No significant hazards consideration comments received: No.

Local Public Document Room location: Pennsville Public Library, 190 S. Broadway, Pennsville, NJ 08070

Public Service Electric & Gas Company, Docket Nos. 50–272 and 50–311, Salem Nuclear Generating Station, Unit Nos. 1 and 2, Salem County, New Jersey

Date of application for amendments: July 2, 1999.

Brief description of amendments: The amendments delete TS 3/4.3.4, ''Instrumentation—Turbine Overspeed Protection,'' and its associated Bases and relocate the requirements to the licensee-controlled Updated Final Safety Analysis Report.

Date of issuance: September 14, 1999

Effective date: As of the date of issuance and shall be implemented within 60 days.

Amendment Nos.: 224 and 205.

Facility Operating License Nos. DPR–70 and DPR–75: The amendments revised the Technical Specifications.

Date of initial notice in Federal Register: August 11, 1999 (64 FR 43776).

The Commission's related evaluation of the amendments is contained in a Safety Evaluation dated September 14, 1999.

No significant hazards consideration comments received: No.

Local Public Document Room location: Salem Free Public Library, 112 West Broadway, Salem, NJ 08079.

Southern California Edison Company, et al., Docket Nos. 50–361 and 50–362, San Onofre Nuclear Generating Station, Units 2 and 3, San Diego County, California

Date of application for amendments: December 31, 1998 (PCN–501), as supplemented June 14, 1999.

Brief description of amendments: The amendments consist of changes to Technical Specification 3.3.5, ''Engineered Safety Features Actuation System (ESFAS) Instrumentation,'' and will include restrictions on operation with a channel of the refueling water storage tank level—low input to the recirculation actuation signal and the steam generator pressure—low input or

steam generator pressure difference—high input to the emergency feedwater actuation signal in the tripped condition.

Date of issuance: September 7, 1999.

Effective date: September 7, 1999, to be implemented within 30 days of issuance.

Amendment Nos.: Unit 2—157; Unit 3—148.

Facility Operating License Nos. NPF–10 and NPF–15: The amendments revised the Technical Specifications.

Date of initial notice in Federal Register: July 28, 1999 (64 FR 40907).

The Commission's related evaluation of the amendments is contained in a Safety Evaluation dated September 7, 1999.

No significant hazards consideration comments received: No.

Local Public Document Room location: Main Library, University of California, P. O. Box 19557, Irvine, California 92713.

Southern California Edison Company, et al., Docket Nos. 50–361 and 50–362, San Onofre Nuclear Generating Station, Units 2 and 3, San Diego County, California

Date of application for amendments: June 18, 1997 (PCN–478), as supplemented May 24 and August 10, 1999.

Brief description of amendments: The amendments modify the Technical Specification surveillance requirements related to diesel generator testing to more clearly reflect safety analysis and testing conditions as it is performed.

Date of issuance: September 9, 1999.

Effective date: September 9, 1999, to be implemented within 30 days of issuance.

Amendment Nos.: Unit 2—158; Unit 3—149.

Facility Operating License Nos. NPF–10 and NPF–15: The amendments revised the Technical Specifications.

Date of initial notice in Federal Register: December 31, 1997 (62 FR 68315) The licensee's letters dated May 24 and August 10, 1999, provided updated Technical Specification pages, clarifications, and additional information that were within the scope of the original **Federal Register** notice and did not change the staff's initial proposed no significant hazards consideration determination.

The Commission's related evaluation of the amendments is contained in a Safety Evaluation dated September 9, 1999.

No significant hazards consideration comments received: No.

Local Public Document Room Location: Main Library, University of California, P.O. Box 19557, Irvine, California 92713.

STP Nuclear Operating Company, Docket Nos. 50–498 and 50–499, South Texas Project, Units 1 and 2, Matagorda County, Texas

Date of amendment request: June 7, 1999.

Brief description of amendments: The amendments revised Technical Specification (TS) 2.2.1, ''Reactor Trip System (RTS) Instrumentation Setpoints,'' and TS 3.3.2, ''Engineered Safety Features Actuation System (ESFAS) Instrumentation,'' and the associated Bases, by removing the Total Allowance, Sensor Error, and Z terms (Z is the statistical summation of errors excluding sensor and rack drift) from the RTS and ESFAS Instrumentation Trip Setpoints Tables. This replaces the five-column methodology with a two-column methodology that consists of the trip setpoint and allowable value columns.

Date of issuance: September 13, 1999.

Effective date: September 13, 1999, to be implemented within 30 days.

Amendment Nos.: Unit 1—116; Unit 2—104.

Facility Operating License Nos. NPF–76 and NPF–80: The amendments revised the Technical Specifications.

Date of initial notice in Federal Register: June 30, 1999 (64 FR 35211) The Commission's related evaluation of the amendments is contained in a Safety Evaluation dated September 13, 1999.

No significant hazards consideration comments received: No.

Local Public Document Room location: Wharton County Junior College, J. M. Hodges Learning Center, 911 Boling Highway, Wharton, Texas 77488.

Tennessee Valley Authority, Docket Nos. 50–327 and 50–328, Sequoyah Nuclear Plant, Units 1 and 2, Hamilton County, Tennessee

Date of application for amendments: June 24, 1999 (TS 99–06).

Brief description of amendments: The amendments revise the Sequoyah Nuclear Plant Technical Specifications (TS) by adding a footnote to allow use of an installed spare electrical inverter, if needed.

Date of issuance: September 23, 1999.

Effective date: As of the date of issuance to be implemented no later than 45 days after issuance.

Amendment Nos.: 246 and 237.

Facility Operating License Nos. DPR–77 and DPR–79: Amendments revise the TS.

Date of initial notice in Federal Register: August 2, 1999 (64 FR 41973) The Commission's related evaluation of the amendment is contained in a Safety Evaluation dated September 23, 1999.

No significant hazards consideration comments received: No.

Local Public Document Room location: Chattanooga-Hamilton County Library, 1001 Broad Street, Chattanooga, Tennessee 37402.

TXU Electric, Docket Nos. 50–445 and 50–446, Comanche Peak Steam Electric Station, Unit Nos. 1 and 2, Somervell County, Texas

Date of amendment request: June 23, 1999, as supplemented by letter dated August 4, 1999.

Brief description of amendments: The amendments revise Surveillance Requirement 3.8.1.13, ''AC Sources—Operating'' to clarify that each emergency diesel generator automatic noncritical trip, except for engine overspeed and generator differential current, is bypassed on either a loss-of-offsite power or a safety injection actuation signal.

Date of issuance: September 21, 1999.

Effective date: As of the date of issuance and shall be implemented within 30 days from the date of issuance.

Amendment Nos.: 69 and 69.

Facility Operating License Nos. NPF–87 and NPF–89: The amendments revised the Technical Specifications.

Date of initial notice in Federal Register: July 14, 1999 (64 FR 38037) The August 4, 1999, letter provided additional and clarifying information that did not change the scope of the June 23, 1999, application and the initial proposed no significant hazards consideration determination.

The Commission's related evaluation of the amendments is contained in a Safety Evaluation dated September 21, 1999.

No significant hazards consideration comments received: No.

Local Public Document Room location: University of Texas at Arlington Library, Government Publications/Maps, 702 College, P.O. Box 19497, Arlington, Texas 76019.

TXU Electric, Docket Nos. 50–445 and 50–446, Comanche Peak Steam Electric Station, Unit Nos. 1 and 2, Somervell County, Texas

Date of amendment request: February 12, 1999, as supplemented by letter dated June 14, 1999

Brief description of amendments: The amendments change Technical Specification (TS) 3.4.13, ''RCS [Reactor Coolant System] Operational Leakage,'' TS 5.5.9, ''Steam Generator (SG) Tube Surveillance Program,'' and TS 5.6.10,

''Steam Generator Tube Inspection Report,'' to implement the 1.0 Volt Steam Generator Tube Repair Criteria for CPSES, Unit 1.

Date of issuance: September 22, 1999.

Effective date: As of the date of issuance and shall be implemented within 30 days from the date of issuance.

Amendment Nos.: Unit 1—Amendment No. 70; Amendment No. 70.

Facility Operating License Nos. NPF–87 and NPF–89: The amendments revised the Technical Specifications.

Date of initial notice in **Federal Register**: May 5, 1999 (64 FR 24202) The June 14, 1999, supplement provided clarifying information that did not change the scope of the February 12, 1999, application and the initial proposed no significant hazards consideration determination.

The Commission's related evaluation of the amendments is contained in a Safety Evaluation dated September 22, 1999.

No significant hazards consideration comments received: No.

Local Public Document Room location: University of Texas at Arlington Library, Government Publications/Maps, 702 College, P.O. Box 19497, Arlington, Texas 76019.

TXU Electric, Docket Nos. 50–445 and 50–446, Comanche Peak Steam Electric Station, Unit Nos. 1 and 2, Somervell County, Texas

Date of amendment request: October 2, 1998, as supplemented by letters dated July 27 and August 26, 1999.

Brief description of amendments: The amendments revise Technical Specfications for CPSES, Unit 1, to define the F* steam generator tube plugging criteria in TS 5.5.9, ''Steam Generator (SG) Tube Surveillance Program,'' and associated reporting requirements in TS 5.6.10, ''Steam Generator Inspection Report.''

Date of issuance: September 22, 1999.

Effective date: As of the date of issuance and shall be implemented within 30 days from the date of issuance.

Amendment Nos.: Unit 1—Amendment No. 71; Unit 2—Amendment No. 71.

Facility Operating License Nos. NPF–87 and NPF–89: The amendments revised the Technical Specifications.

Date of initial notice in Federal Register: November 4, 1998 (63 FR 59597). The July 27 and August 26, 1999, letters provided clarifying information that did not change the scope of the October 2, 1998, application and the initial proposed no significant hazards consideration determination.

The Commission's related evaluation of the amendments is contained in a Safety Evaluation dated September 22, 1999.

No significant hazards consideration comments received: No.

Local Public Document Room location: University of Texas at Arlington Library, Government Publications/Maps, 702 College, P.O. Box 19497, Arlington, Texas 76019.

Vermont Yankee Nuclear Power Corporation, Docket No. 50–271, Vermont Yankee Nuclear Power Station, Vernon, Vermont

Date of application for amendment: May 5, 1999.

Brief description of amendment: The amendment revises the technical specifications (TSs) to enhance the limiting conditions for operation and surveillance requirements relating to the standby liquid control system and to incorporate certain provisions of NRC's rule on anticipated transients without scram. The change involves the use of enriched boron in the standby liquid control system and improves upon other aspects of the TSs for this system.

Date of Issuance: September 17, 1999.

Effective date: September 17, 1999, and shall be implemented within 30 days.

Amendment No.: 175.

Facility Operating License No. DPR–28. Amendment revised the Technical Specifications.

Date of initial notice in Federal Register: June 30, 1999 (64 FR 35214).

The Commission's related evaluation of this amendment is contained in a Safety Evaluation dated September 17, 1999.

No significant hazards consideration comments received: No.

Local Public Document Room location: Brooks Memorial Library, 224 Main Street, Brattleboro, VT 05301.

Vermont Yankee Nuclear Power Corporation, Docket No. 50–271, Vermont Yankee Nuclear Power Station, Vernon, Vermont

Date of application for amendment: July 12, 1999.

Brief description of amendment: The amendment revises the values for the minimum critical power ratio safety limits and deletes the wording classifying the limits as cycle-specific values.

Date of Issuance: September 21, 1999.

Effective date: September 21, 1999, and shall be implemented within 60 days.

Amendment No.: 176

Facility Operating License No. DPR–28: Amendment revised the Technical Specifications.

Date of initial notice in Federal Register: July 28, 1999 (64 FR 40910).

The Commission's related evaluation of this amendment is contained in a Safety Evaluation dated September 21, 1999.

No significant hazards consideration comments received: No.

Local Public Document Room location: Brooks Memorial Library, 224 Main Street, Brattleboro, VT 05301.

Notice of Issuance of Amendments to Facility Operating Licenses and Final Determination of No Significant Hazards Consideration and Opportunity for a Hearing (Exigent Public Announcement or Emergency Circumstances)

During the period since publication of the last biweekly notice, the Commission has issued the following amendments. The Commission has determined for each of these amendments that the application for the amendment complies with the standards and requirements of the Atomic Energy Act of 1954, as amended (the Act), and the Commission's rules and regulations. The Commission has made appropriate findings as required by the Act and the Commission's rules and regulations in 10 CFR Chapter I, which are set forth in the license amendment.

Because of exigent or emergency circumstances associated with the date the amendment was needed, there was not time for the Commission to publish, for public comment before issuance, its usual 30-day Notice of Consideration of Issuance of Amendment, Proposed No Significant Hazards Consideration Determination, and Opportunity for a Hearing.

For exigent circumstances, the Commission has either issued a **Federal Register** notice providing opportunity for public comment or has used local media to provide notice to the public in the area surrounding a licensee's facility of the licensee's application and of the Commission's proposed determination of no significant hazards consideration. The Commission has provided a reasonable opportunity for the public to comment, using its best efforts to make available to the public means of communication for the public to respond quickly, and in the case of telephone comments, the comments have been recorded or transcribed as appropriate and the licensee has been informed of the public comments.

In circumstances where failure to act in a timely way would have resulted, for

example, in derating or shutdown of a nuclear power plant or in prevention of either resumption of operation or of increase in power output up to the plant's licensed power level, the Commission may not have had an opportunity to provide for public comment on its no significant hazards consideration determination. In such case, the license amendment has been issued without opportunity for comment. If there has been some time for public comment but less than 30 days, the Commission may provide an opportunity for public comment. If comments have been requested, it is so stated. In either event, the State has been consulted by telephone whenever possible.

Under its regulations, the Commission may issue and make an amendment immediately effective, notwithstanding the pendency before it of a request for a hearing from any person, in advance of the holding and completion of any required hearing, where it has determined that no significant hazards consideration is involved.

The Commission has applied the standards of 10 CFR 50.92 and has made a final determination that the amendment involves no significant hazards consideration. The basis for this determination is contained in the documents related to this action. Accordingly, the amendments have been issued and made effective as indicated.

Unless otherwise indicated, the Commission has determined that these amendments satisfy the criteria for categorical exclusion in accordance with 10 CFR 51.22. Therefore, pursuant to 10 CFR 51.22(b), no environmental impact statement or environmental assessment need be prepared for these amendments. If the Commission has prepared an environmental assessment under the special circumstances provision in 10 CFR 51.12(b) and has made a determination based on that assessment, it is so indicated.

For further details with respect to the action see (1) the application for amendment, (2) the amendment to Facility Operating License, and (3) the Commission's related letter, Safety Evaluation and/or Environmental Assessment, as indicated. All of these items are available for public inspection at the Commission's Public Document Room, the Gelman Building, 2120 L Street, NW., Washington, DC, and at the local public document room for the particular facility involved.

The Commission is also offering an opportunity for a hearing with respect to the issuance of the amendment. By November 5, 1999, the licensee may file a request for a hearing with respect to issuance of the amendment to the subject facility operating license and any person whose interest may be affected by this proceeding and who wishes to participate as a party in the proceeding must file a written request for a hearing and a petition for leave to intervene. Requests for a hearing and a petition for leave to intervene shall be filed in accordance with the Commission's ''Rules of Practice for Domestic Licensing Proceedings'' in 10 CFR part 2. Interested persons should consult a current copy of 10 CFR 2.714 which is available at the Commission's Public Document Room, the Gelman Building, 2120 L Street, NW., Washington, DC and at the local public document room for the particular facility involved. If a request for a hearing or petition for leave to intervene is filed by the above date, the Commission or an Atomic Safety and Licensing Board, designated by the Commission or by the Chairman of the Atomic Safety and Licensing Board Panel, will rule on the request and/or petition; and the Secretary or the designated Atomic Safety and Licensing Board will issue a notice of a hearing or an appropriate order.

As required by 10 CFR 2.714, a petition for leave to intervene shall set forth with particularity the interest of the petitioner in the proceeding, and how that interest may be affected by the results of the proceeding. The petition should specifically explain the reasons why intervention should be permitted with particular reference to the following factors: (1) The nature of the petitioner's right under the Act to be made a party to the proceeding; (2) the nature and extent of the petitioner's property, financial, or other interest in the proceeding; and (3) the possible effect of any order which may be entered in the proceeding on the petitioner's interest. The petition should also identify the specific aspect(s) of the subject matter of the proceeding as to which petitioner wishes to intervene. Any person who has filed a petition for leave to intervene or who has been admitted as a party may amend the petition without requesting leave of the Board up to 15 days prior to the first prehearing conference scheduled in the proceeding, but such an amended petition must satisfy the specificity requirements described above.

Not later than 15 days prior to the first prehearing conference scheduled in the proceeding, a petitioner shall file a supplement to the petition to intervene which must include a list of the contentions which are sought to be litigated in the matter. Each contention must consist of a specific statement of the issue of law or fact to be raised or controverted. In addition, the petitioner shall provide a brief explanation of the bases of the contention and a concise statement of the alleged facts or expert opinion which support the contention and on which the petitioner intends to rely in proving the contention at the hearing. The petitioner must also provide references to those specific sources and documents of which the petitioner is aware and on which the petitioner intends to rely to establish those facts or expert opinion. Petitioner must provide sufficient information to show that a genuine dispute exists with the applicant on a material issue of law or fact. Contentions shall be limited to matters within the scope of the amendment under consideration. The contention must be one which, if proven, would entitle the petitioner to relief. A petitioner who fails to file such a supplement which satisfies these requirements with respect to at least one contention will not be permitted to participate as a party.

Those permitted to intervene become parties to the proceeding, subject to any limitations in the order granting leave to intervene, and have the opportunity to participate fully in the conduct of the hearing, including the opportunity to present evidence and cross-examine witnesses. Since the Commission has made a final determination that the amendment involves no significant hazards consideration, if a hearing is requested, it will not stay the effectiveness of the amendment. Any hearing held would take place while the amendment is in effect.

A request for a hearing or a petition for leave to intervene must be filed with the Secretary of the Commission, U.S. Nuclear Regulatory Commission, Washington, DC 20555–0001, Attention: Rulemakings and Adjudications Staff or may be delivered to the Commission's Public Document Room, the Gelman Building, 2120 L Street, NW., Washington, DC, by the above date. A copy of the petition should also be sent to the Office of the General Counsel, U.S. Nuclear Regulatory Commission, Washington, DC 20555-0001, and to the attorney for the licensee.

Nontimely filings of petitions for leave to intervene, amended petitions, supplemental petitions and/or requests for a hearing will not be entertained absent a determination by the Commission, the presiding officer or the Atomic Safety and Licensing Board that the petition and/or request should be granted based upon a balancing of the factors specified in 10 CFR 2.714(a)(1)(i)–(v) and 2.714(d).

Duke Energy Corporation, Docket No. 50–369, McGuire Nuclear Station, Unit 1, Mecklenberg County, North Carolina

Date of application for amendment: August 27, 1999.

Brief description of amendment: The amendment approves a one-time extension of the surveillance frequency for Technical Specifications Surveillance Requirement (TSSR) 3.1.4.2 beyond the 25 percent extension allowed by TSSR 3.0.2 to the McGuire Nuclear Station, Unit 1. This license amendment is effective upon issuance and is to expire upon entering Mode 3 during Unit 1 startup following the Unit 1 End of Cycle 13 refueling outage.

Date of issuance: September 8, 1999.

Effective date: As of its date of issuance (September 8, 1999), and shall expire upon entering Mode 3 during startup, following the End of Cycle 13 refueling outage.

Amendment No.: Unit 1–186.

Facility Operating License No. NPF–9: Amendments revised the Technical Specifications.

Press release issued requesting comments as to proposed no significant hazards consideration: Yes, September 2, 1999, *Charlotte Observer.*

Comments received: No.

The Commission's related evaluation of the amendment, finding of exigent circumstances, consultation with the State of North Carolina, and final determination of no significant hazards consideration are contained in a Safety Evaluation dated September 8, 1999.

Local Public Document Room location: J. Murrey Atkins Library, University of North Carolina at Charlotte, 9201 University City Boulevard, Charlotte, North Carolina.

Attorney for licensee: Ms. Lisa F. Vaughn, Duke Energy Corporation, 422 South Church Street, Charlotte, North Carolina NRC Section Chief: Richard L. Emch, Jr.

Duke Energy Corporation, Docket Nos. 50–369 and 50–370, McGuire Nuclear Station, Units 1 and 2, Mecklenburg County, North Carolina

Date of application for amendments: September 13, 1999.

Brief description of amendments: The amendments revise the Technical Specifications TS 3.7.9, ''Control Room Area Ventilation System (CRAVS),'' to establish actions to be taken for an inoperable control room ventilation system due to a degraded control room pressure boundary. This revision approves changes that would allow up to 24 hours to restore the Control Room Pressure Boundary (CRPB) to operable status when two CRAVS trains are inoperable due to an inoperable CRPB in MODES 1, 2, 3, and 4. In addition, a Limiting Condition for Operation note would be added to allow the CRPB to be opened intermittently under administrative control without affecting CRAVS operability.

Date of issuance: September 22, 1999.

Effective date: As of the date of issuance and shall be implemented upon receipt.

Amendment Nos.: Unit 1—187; Unit 2—168.

Facility Operating License Nos. NPF–9 and NPF–17: Amendments revised the Technical Specifications.

Press release issued requesting comments as to proposed no significant hazards consideration: Yes, September 17, 1999, *Charlotte Observer.*

Comments received: No.

The Commission's related evaluation and the amendment, finding of emergency circumstances, consultation with the State of North Carolina, and final no significant hazards consideration determination are contained in a Safety Evaluation dated September 22, 1999.

Attorney for licensee: Ms. Lisa F. Vaughn, Duke Energy Corporation, 422 South Church Street, Charlotte, North Carolina.

Local Public Document Room location: J. Murrey Atkins Library, University of North Carolina at Charlotte, 9201 University City Boulevard, Charlotte, North Carolina.

NRC Section Chief: Richard L. Emch, Jr.

For the Nuclear Regulatory Commission.

Dated at Rockville, Maryland, this 29th day of September, 1999.

John A. Zwolinski,

Director, Division of Licensing Project Management, Office of Nuclear Reactor Regulation.

[FR Doc. 99–25795 Filed 10–5–99; 8:45 am]

BILLING CODE 7590–01–P

SMALL BUSINESS ADMINISTRATION

Revocation of License of Small Business Investment Company

Pursuant to the authority granted to the United States Small Business Administration by the Final Order of the United States District Court for the District of Massachusetts, dated August 5, 1998, the United States Small Business Administration hereby revokes the license of Bever Capital Corporation, a Massachusetts corporation, to function as a small business investment company under the Small Business Investment Company License No. 01/01–0325 issued to Bever Capital Corporation on October 31, 1983 and said license is hereby declared null and void as of September 30, 1998.

Dated: September 30, 1999.

United States Small Business Administration.

Don A. Christensen,

Associate Administrator for Investment.

[FR Doc. 99–25981 Filed 10–5–99; 8:45 am]

BILLING CODE 8025–01–P

SMALL BUSINESS ADMINISTRATION

Revocation of License of Small Business Investment Company

Pursuant to the authority granted to the United States Small Business Administration by the Windup Order of the United States District Court for the Southern District of New York, dated June 4, 1999, the United States Small Business Administration hereby revokes the license of Diamond Capital Corporation, a New York corporation, to function as a small business investment company under the Small Business Investment Company License No. 02/02–0510 issued to Diamond Capital Corporation on January 21, 1988 and said license is hereby declared null and void as of September 30, 1999.

Dated: September 30, 1999.

United States Small Business Administration.

Don A. Christensen,

Associate Administrator for Investment.

[FR Doc. 99–25985 Filed 10–5–99; 8:45 am]

BILLING CODE 8025–01–P

SMALL BUSINESS ADMINISTRATION

Revocation of License of Small Business Investment Company

Pursuant to the authority granted to the United States Small Business Administration by the Final Order of the United States District Court for the Southern District of New York, dated August 24, 1998, the United States Small Business Administration hereby revokes the license of Everlast Capital Corporation a New York corporation, to function as a Small Business Investment Company under the Small Business Investment Company License No. 02/02–5468 issued to Everlast Capital Corporation on July 30, 1984 and said license is hereby declared null and void as of September 30, 1998.

Dated: September 30, 1999.

United States Small Business Administration.

Don A. Christensen,

Associate Administrator for Investment.

[FR Doc. 99–25979 Filed 10–5–99; 8:45 am]

BILLING CODE 8025–01–P

SMALL BUSINESS ADMINISTRATION

Revocation of License of Small Business Investment Company

Pursuant to the authority granted to the United States Small Business Administration by the Final Order of the United States District Court for the District of New Jersey, dated August 28, 1998, the United States Small Business Administration hereby revokes the license of Formosa Capital Corporation, a New Jersey corporation, to function as a small business investment company under the Small Business Investment Company License No. 02/02–5485 issued to Formosa Capital Corporation on August 22, 1985 and said license is hereby declared null and void as of October 16, 1998.

Dated: September 30, 1999.

United States Small Business Administration.

Don A. Christensen,

Associate Administrator for Investment.

[FR Doc. 99–25980 Filed 10–5–99; 8:45 am]

BILLING CODE 8025–01–P

SMALL BUSINESS ADMINISTRATION

Revocation of License of Small Business Investment Company

Pursuant to the authority granted to the United States Small Business Administration by the Final Order of the United States District Court for the District of Massachusetts, dated July 28, 1998, the United States Small Business Administration hereby revokes the license of Orange Nassau Capital Corporation, a Massachusetts corporation, to function as a small business investment company under the Small Business Investment Company License No. 01/01–0313 issued to Orange Nassau Capital Corporation on July 8, 1981 and said license is hereby declared null and void as of September 30, 1998.

Dated: September 30, 1999.

United States Small Business Administration.

Don A. Christensen,

Associate Administrator for Investment.

[FR Doc. 99–25983 Filed 10–5–99; 8:45 am]

BILLING CODE 8025–01–P

SMALL BUSINESS ADMINISTRATION

Revocation of License of Small Business Investment Company

Pursuant to the authority granted to the United States Small Business Administration by the Final Order of the United States District Court for the District of Massachusetts, dated August 5, 1998, the United States Small Business Administration hereby revokes the license of TBM II Capital Corporation, a Massachusetts corporation, to function as a small business investment company under the Small Business Investment Company License No. 01/01–0319 issued to TBM II Capital Corporation on July 27, 1982 and said license is hereby declared null and void as of September 30, 1998.

Dated: September 30, 1999.

United States Small Business Administration.

Don A. Christensen,

Associate Administrator for Investment.

[FR Doc. 99–25982 Filed 10–5–99; 8:45 am]

BILLING CODE 8025–01–P

SMALL BUSINESS ADMINISTRATION

Revocation of License of Small Business Investment Company

Pursuant to the authority granted to the United States Small Business Administration by the Final Order of the United States District Court for the District of Massachusetts, dated August 5, 1998, the United States Small Business Administration hereby revokes the license of Vadus Capital Corporation, a Massachusetts corporation, to function as a small business investment company under the Small Business Investment Company License No. 01/01–0314 issued to Vadus Capital Corporation on November 3, 1981 and said license is hereby declared null and void as of September 30, 1998.

Dated: September 30, 1999.

United States Small Business Administration.

Don A. Christensen,

Associate Administrator for Investment.

[FR Doc. 99–25984 Filed 10–5–99; 8:45 am]

BILLING CODE 8025–01–P

SMALL BUSINESS ADMINISTRATION

[Declaration of Disaster #3222]

State of Connecticut

As a result of the President's major disaster declaration on September 23, 1999, I find that Fairfield and Hartford Counties in the State of Connecticut constitute a disaster area due to damages caused by high winds, heavy rain, and flooding associated with Tropical Storm Floyd beginning on September 16, 1999 and continuing. Applications for loans for physical damage as a result of this disaster may be filed until the close of business on November 21, 1999, and for loans for economic injury until the close of business on June 23, 2000 at the address listed below or other locally announced locations: U.S. Small Business Administration, Disaster Area 1 Office, 360 Rainbow Blvd., South, 3rd Floor, Niagara Falls, NY 14303.

In addition, applications for economic injury loans from small businesses located in the following contiguous counties may be filed until the specified date at the above location: Litchfield, Middlesex, New Haven, New London, and Tolland Counties in Connecticut, and Hampden County, Massachusetts.

Any counties contiguous to the above-named primary counties and not listed herein have been covered under a separate declaration for the same occurrence.

The interest rates are:

For Physical Damage:

Homeowners with credit available elsewhere—*7.250%*

Homeowners without credit available elsewhere—*3.625%*

Businesses with credit available elsewhere—*8.000%*

Businesses and non-profit organizations without credit available elsewhere—*4.000%*

Others (including non-profit organizations) with credit available elsewhere—*7.000%*

For Economic Injury:

Businesses and small agricultural cooperatives without credit available elsewhere—*4.000%*

The number assigned to this disaster for physical damage is 322211. For economic injury the numbers are 9F0700 for Connecticut and 9F08 for Massachusetts.

(Catalog of Federal Domestic Assistance Program Nos. 59002 and 59008)

Dated: September 27, 1999.

Bernard Kulik,

Associate Administrator for Disaster Assistance.

[FR Doc. 99–25908 Filed 10–5–99; 8:45 am]

BILLING CODE 8025–01–P

SMALL BUSINESS ADMINISTRATION

[Declaration of Disaster #3217]

State of Delaware

As a result of the President's major disaster declaration on September 21,

1999, I find that New Castle County, Delaware constitutes a disaster area due to damages caused by Hurricane Floyd that occurred on September 15–17, 1999. Applications for loans for physical damage as a result of this disaster may be filed until the close of business on November 19, 1999, and for loans for economic injury until the close of business on June 21, 2000 at the address listed below or other locally announced locations: Small Business Administration, Disaster Area 1 Office, 360 Rainbow Blvd., South, 3rd Floor, Niagara Falls, NY 14303.

In addition, applications for economic injury loans from small businesses located in the contiguous counties of Kent County, Delaware and Salem County, New Jersey may be filed until the specified date at the above location.

Any counties contiguous to the above-named primary counties and not listed herein have been covered under a separate declaration for the same occurrence.

The interest rates are:

For Physical Damage:

Homeowners with credit available elsewhere—*7.250%*

Homeowners without credit available elsewhere—*3.625%*

Businesses with credit available elsewhere—*8.000%*

Businesses and non-profit organizations without credit available elsewhere—*4.000%*

Others (including non-profit organizations) with credit available elsewhere—*7.000%*

For Economic Injury:

Businesses and small agricultural cooperatives without credit available elsewhere—*4.000%*

The number assigned to this disaster for physical damage is 321708. For economic injury the numbers are 9E8100 for Delaware and 9E8200 for New Jersey.

(Catalog of Federal Domestic Assistance Program Nos. 59002 and 59008)

Dated: September 27, 1999.

Bernard Kulik,

Associate Administrator for Disaster Assistance.

[FR Doc. 99–25907 Filed 10–5–99; 8:45 am]

BILLING CODE 8025–01–P

SMALL BUSINESS ADMINISTRATION

[Declaration of Disaster #3220]

State of Florida

Flagler, Highlands, Nassau, and Volusia Counties and the contiguous counties of Baker, Brevard, Charlotte, De Soto, Duval, Glades, Hardee, Lake, Okeechobee, Orange, Osceola, Polk, Putnam, Seminole, and St. Johns in the State of Florida, and Camden and Charlton Counties in the State of Georgia constitute a disaster area as a result of damages caused by Hurricane Floyd that occurred September 13–15, 1999. Applications for loans for physical damage as a result of this disaster may be filed until the close of business on November 26, 1999 and for economic injury until the close of business on June 27, 2000 at the address listed below or other locally announced locations: U.S. Small Business Administration, Disaster Area 2 Office, One Baltimore Place, Suite 300, Atlanta, GA 30308.

The interest rates are:

For Physical Damage:

Homeowners with credit available elsewhere—*7.250%*

Homeowners without credit available elsewhere—*3.625%*

Businesses with credit available elsewhere—*8.000%*

Businesses and non-profit organizations without credit available elsewhere—*4.000%*

Others (including non-profit organizations) with credit available elsewhere—*7.000%*

For Economic Injury:

Businesses and small agricultural cooperatives without credit available elsewhere—*4.000%*

The numbers assigned to this disaster for physical damage are 322008 for Florida and 322108 for Georgia. For economic injury the numbers are 9F0500 for Florida and 9F0600 for Georgia.

(Catalog of Federal Domestic Assistance Program Nos. 59002 and 59008)

Dated: September 27, 1999.

Fred P. Hochberg,

Acting Administrator.

[FR Doc. 99–25909 Filed 10–5–99; 8:45 am]

BILLING CODE 8025–01–P

SMALL BUSINESS ADMINISTRATION

[Declaration of Disaster #3223]

State of Maryland

As a result of the President's major disaster declaration on September 24, 1999, I find that Anne Arundel, Calvert, Caroline, Cecil, Charles, Harford, Kent, Queen Anne's, Somerset, St. Mary's, and Talbot Counties in the State of Maryland constitute a disaster area due to damages caused by Hurricane Floyd that occurred on September 16–20, 1999. Applications for loans for physical damage as a result of this disaster may be filed until the close of business on November 22, 1999, and for loans for economic injury until the close of business on June 26, 2000 at the address listed below or other locally announced locations: U.S. Small Business Administration, Disaster Area 1 Office, 360 Rainbow Blvd., South, 3rd Floor, Niagara Falls, NY 14303.

In addition, applications for economic injury loans from small businesses located in the following contiguous counties may be filed until the specified date at the above location: Baltimore (including Baltimore City), Dorchester, Howard, Prince Georges, Wicomico, and Worcester Counties in Maryland; Fairfax (including the Independent Cities of Alexandria, Arlington, Fairfax, and Vienna), King George, Prince William, and Stafford Counties in Virginia; and Sussex County, Delaware.

Any counties contiguous to the above-named primary counties and not listed herein have been covered under a separate declaration for the same occurrence.

The interest rates are:

For Physical Damage:

Homeowners with credit available elsewhere—*7.250%*

Homeowners without credit available elsewhere—*3.625%*

Businesses with credit available elsewhere—*8.000%*

Businesses and non-profit organizations without credit available elsewhere—*4.000%*

Others (including non-profit organizations) with credit available elsewhere—*7.000%*

For Economic Injury:

Businesses and small agricultural cooperatives without credit available elsewhere—*4.000%*

The number assigned to this disaster for physical damage is 322308. For economic injury the numbers are 9F0900 for Maryland, 9F1000 for Virginia, and 9F1100 for Delaware.

(Catalog of Federal Domestic Assistance Program Nos. 59002 and 59008)

Dated: September 27, 1999.

Bernard Kulik,

Associate Administrator for Disaster Assistance.

[FR Doc. 99–25911 Filed 10–5–99; 8:45 am]

BILLING CODE 8025–01–P

SMALL BUSINESS ADMINISTRATION

[Declaration of Disaster #3215]

State of New Jersey

As a result of the President's major disaster declaration on September 18, 1999, and an amendment thereto on the same date, I find that Bergen, Essex,

Mercer, Middlesex, Morris, Passaic, Somerset, and Union Counties in the State of New Jersey constitute a disaster area due to damages caused by Hurricane Floyd beginning on September 16, 1999 and continuing. Applications for loans for physical damage as a result of this disaster may be filed until the close of business on November 16, 1999, and for loans for economic injury until the close of business on June 19, 2000 at the address listed below or other locally announced locations: U.S. Small Business Administration, Disaster Area 1 Office 360 Rainbow Blvd., South, 3rd Floor, Niagara Falls, NY 14303.

In addition, applications for economic injury loans from small businesses located in the following contiguous counties may be filed until the specified date at the above location: Burlington, Hudson, Hunterdon, Monmouth, Sussex, and Warren Counties in New Jersey, and New York and Richmond Counties in New York.

Any counties contiguous to the above-named primary counties and not listed herein have been covered under a separate declaration for the same occurrence.

The interest rates are:

For Physical Damage:

Homeowners with credit available elsewhere—*7.250%*

Homeowners without credit available elsewhere—*3.625%*

Businesses with credit available elsewhere—*8.000%*

Businesses and non-profit organizations without credit available elsewhere— *4.000%*

Others (including non-profit organizations) with credit available elsewhere—*7.000%*

For Economic Injury:

Businesses and small agricultural cooperatives without credit available elsewhere—*4.000%*

The number assigned to this disaster for physical damage is 321508. For economic injury the numbers are 9E7600 for New Jersey and 9E8000 for New York.

(Catalog of Federal Domestic Assistance Program Nos. 59002 and 59008)

Dated: September 27, 1999.

Bernard Kulik,

Associate Administrator for Disaster Assistance.

[FR Doc. 99–25915 Filed 10–5–99; 8:45 am]

BILLING CODE 8025–01–P

SMALL BUSINESS ADMINISTRATION

[Declaration of Disaster #3216]

State of New York

As a result of the President's major disaster declaration on September 19, 1999, and an amendment thereto on September 23, I find that Essex, Orange, Putnam, Rockland, and Westchester Counties in the State of New York constitute a disaster area due to damages caused by Hurricane Floyd beginning on September 16, 1999 and continuing. Applications for loans for physical damage as a result of this disaster may be filed until the close of business on November 17, 1999, and for loans for economic injury until the close of business on June 19, 2000 at the address listed below or other locally announced locations: U.S. Small Business Administration, Disaster Area 1 Office, 360 Rainbow Blvd., South, 3rd Floor, Niagara Falls, NY 14303.

In addition, applications for economic injury loans from small businesses located in the following contiguous counties may be filed until the specified date at the above location: Bronx, Clinton, Dutchess, Franklin, Hamilton, Sullivan, Ulster, and Warren Counties in New York; Pike County, Pennsylvania; and Addison, Chittenden, and Grand Isle Counties in Vermont.

Any counties contiguous to the above-named primary counties and not listed herein have been covered under a separate declaration for the same occurrence.

The interest rates are:

For Physical Damage:

Homeowners with credit available elsewhere—*7.250%*

Homeowners without credit available elsewhere—*3.625%*

Businesses with credit available elsewhere—*8.000%*

Businesses and non-profit organizations without credit available elsewhere—*4.000%*

Others (including non-profit organizations) with credit available elsewhere—*7000%*

For Economic Injury:

Businesses and small agricultural cooperatives without credit available elsewhere—*4.000%*

The number assigned to this disaster for physical damage is 321608. For economic injury the numbers are 9E7700 for New York, 9E7800 for Pennsylvania, and 9F1200 for Vermont.

(Catalog of Federal Domestic Assistance Program Nos. 59002 and 59008)

Dated: September 27, 1999.

Bernard Kulik,

Associate Administrator for Disaster Assistance.

[FR Doc. 99–25914 Filed 10–5–99; 8:45 am]

BILLING CODE 8025–01–P

SMALL BUSINESS ADMINISTRATION

[Declaration of Disaster #3212]

State of North Carolina

As a result of the President's major disaster declaration on September 16, 1999, I find that the following counties in the State of North Carolina constitute a disaster area due to damages caused by Hurricane Floyd beginning on September 15, 1999, and continuing: Alamance, Anson, Beaufort, Bertie, Bladen, Brunswick, Camden, Carteret, Caswell, Chatham, Chowan, Columbus, Craven, Cumberland, Currituck, Dare, Davidson, Duplin, Durham, Edgecombe, Forsyth, Franklin, Gates, Granville, Greene, Guilford, Halifax, Harnett, Hertford, Hoke, Hyde, Johnston, Jones, Lee, Lenoir, Martin, Montgomery, Moore, Nash, New Hanover, Northampton, Onslow, Orange, Pamlico, Pasquotank, Pender, Perquimans, Person, Pitt, Randolph, Richmond, Robeson, Rockingham, Rowan, Sampson, Scotland, Stanly, Stokes, Tyrrell, Union, Vance, Wake, Warren, Washington, Wayne, and Wilson. Applications for loans for physical damage as a result of this disaster may be filed until the close of business on November 14, 1999, and for loans for economic injury until the close of business on June 16, 2000 at the address listed below or other locally announced locations: U.S. Small Business Administration, Disaster Area 2 Office, One Baltimore Place, Suite 300, Atlanta, GA 30308.

In addition, applications for economic injury loans from small businesses located in the following contiguous counties may be filed until the specified date at the above location: Cabarrus, Davie, Iredell, Mecklenburg, Surry, and Yadkin Counties in North Carolina; Chesterfield, Lancaster, and Marlboro Counties in South Carolina; and Brunswick, Greensville, Halifax, Henry, Mecklenburg, Patrick, and Pittsylvania Counties in Virginia.

Any counties and/or independent cities contiguous to the above-named primary counties and not listed herein have been declared under a separate declaration for the same occurrence.

The interest rates are:

For Physical Damage:

Homeowners with credit available

elsewhere—7.250%
Homeowners without credit available elsewhere—3.625%
Businesses with credit available elsewhere—8.000%
Businesses and non-profit organizations without credit available elsewhere—4.000%
Others (including non-profit organizations) with credit available elsewhere—7.000%
For Economic Injury
Businesses and small agricultural cooperatives without credit available elsewhere—4.000%

The number assigned to this disaster for physical damage is 321208. For economic injury the numbers are 9E6800 for North Carolina, 9E6900 for South Carolina, and 9E7000 for Virginia.

(Catalog of Federal Domestic Assistance Program Nos. 59002 and 59008)

Dated: September 23, 1999.

Bernard Kulik,

Associate Administrator for Disaster Assistance.

[FR Doc. 99–25916 Filed 10–5–99; 8:45 am]

BILLING CODE 8025–01–P

SMALL BUSINESS ADMINISTRATION

[Declaration of Disaster #3214]

Commonwealth of Pennsylvania

As a result of the President's major disaster declaration on September 18, 1999, I find that Bucks, Chester, Delaware, Lancaster, Montgomery, Philadelphia, and York Counties in the Commonwealth of Pennsylvania constitute a disaster area due to damages caused by Hurricane Floyd beginning on September 16, 1999 and continuing. Applications for loans for physical damage as a result of this disaster may be filed until the close of business on November 16, 1999, and for loans for economic injury until the close of business on June 19, 2000 at the address listed below or other locally announced locations: U.S. Small Business Administration, Disaster Area 1 Office, 360 Rainbow Blvd., South, 3rd Floor, Niagara Falls, NY 14303.

In addition, applications for economic injury loans from small businesses located in the following contiguous counties may be filed until the specified date at the above location: Adams, Berks, Cumberland, Dauphin, Lebanon, Lehigh, and Northampton Counties in Pennsylvania; Carroll County, Maryland; and Camden and Gloucester Counties in New Jersey.

Any counties contiguous to the above-named primary counties and not listed herein have been covered under a separate declaration for the same occurrence.

The interest rates are:

For Physical Damage:
Homeowners with credit available elsewhere—7.250%
Homeowners without credit available elsewhere—3.625%
Businesses with credit available elsewhere—8.000%
Businesses and non-profit organizations without credit available elsewhere—4.000%
Others (including non-profit organizations) with credit available elsewhere—7.000%
For Economic Injury
Businesses and small agricultural cooperatives without credit available elsewhere—4.000%

The number assigned to this disaster for physical damage is 321408. For economic injury the numbers are 9E7200 for Pennsylvania, 9E7300 for Maryland, and 9E7500 for New Jersey.

(Catalog of Federal Domestic Assistance Program Nos. 59002 and 59008)

Dated: September 27, 1999.

Bernard Kulik,

Associate Administrator for Disaster Assistance.

[FR Doc. 99–25910 Filed 10–5–99; 8:45 am]

BILLING CODE 8025–01–P

SMALL BUSINESS ADMINISTRATION

[Declaration of Disaster #3219]

Commonwealth of Pennsylvania

As a result of the President's major disaster declaration on September 22, 1999, I find that Lycoming, Northumberland, Snyder, and Union Counties in the Commonwealth of Pennsylvania constitute a disaster area due to damages caused by severe flash flooding associated with Tropical Depression Dennis that occurred on September 6–7, 1999. Applications for loans for physical damage as a result of this disaster may be filed until the close of business on November 20, 1999, and for loans for economic injury until the close of business on June 22, 2000 at the address listed below or other locally announced locations: U.S. Small Business Administration, Disaster Area 1 Office, 360 Rainbow Blvd., South, 3rd Floor, Niagara Falls, NY 14303.

In addition, applications for economic injury loans from small businesses located in the following contiguous counties in Pennsylvania may be filed until the specified date at the above location: Bradford, Centre, Clinton, Columbia, Dauphin, Juniata, Mifflin, Montour, Perry, Potter, Schuylkill, Sullivan, and Tioga.

The interest rates are:

For Physical Damage:
Homeowners with credit available elsewhere—*7.250%*
Homeowners without credit available elsewhere—*3.625%*
Businesses with credit available elsewhere—*8.000%*
Businesses and non-profit organizations without credit available elsewhere—*4.000%*
Others (including non-profit organizations) with credit available elsewhere—*7.000%*
For Economic Injury:
Businesses and small agricultural cooperatives without credit available elsewhere—4.000%

The numbers assigned to this disaster are 321906 for physical damage and 9F0400 for economic injury.

(Catalog of Federal Domestic Assistance Program Nos. 59002 and 59008)

Dated: September 27, 1999.

Bernard Kulik,

Associate Administrator for Disaster Assistance.

[FR Doc. 99–25912 Filed 10–5–99; 8:45 am]

BILLING CODE 8025–01–P

SMALL BUSINESS ADMINISTRATION

[Declaration of Disaster #3218]

State of South Carolina

As a result of the President's major disaster declaration on September 21, 1999, I find that Charleston, Georgetown, and Horry Counties in the State of South Carolina constitute a disaster area due to damages caused by Hurricane Floyd beginning on September 14, 1999 and continuing. Applications for loans for physical damage as a result of this disaster may be filed until the close of business on November 19, 1999, and for loans for economic injury until the close of business on June 21, 2000 at the address listed below or other locally announced locations: Small Business Administration, Disaster Area 2 Office, One Baltimore Place, Suite 300, Atlanta, GA 30309.

In addition, applications for economic injury loans from small businesses located in the contiguous counties of Berkeley, Colleton, Dillon, Dorchester, Marion, and Williamsburg in the State of South Carolina may be filed until the specified date at the above location.

Any counties contiguous to the above-named primary counties and not listed herein have been covered under a separate declaration for the same occurrence.

The interest rates are:

For Physical Damage:

Homeowners with credit available elsewhere—*7.250%*

Homeowners without credit available elsewhere—*3.625%*

Businesses with credit available elsewhere—*8.000%*

Businesses and non-profit organizations without credit available elsewhere—*4.000%*

Others (including non-profit organizations) with credit available elsewhere—*7.000%*

For Economic Injury:

Businesses and small agricultural cooperatives without credit available elsewhere—*4.000%*

The numbers assigned to this disaster are 321808 for physical damage and 9E8400 for economic injury.

(Catalog of Federal Domestic Assistance Program Nos. 59002 and 59008)

Dated: September 27, 1999.

Bernard Kulik,

Associate Administrator for Disaster Assistance.

[FR Doc. 99–25906 Filed 10–5–99; 8:45 am]

BILLING CODE 8025–01–P

SMALL BUSINESS ADMINISTRATION

[Declaration of Disaster #3213]

Commonwealth of Virginia

As a result of the President's major disaster declaration on September 18, 1999, and amendments thereto on September 20 and 22, I find that the following Counties and Independent Cities in the Commonwealth of Virginia constitute a disaster area due to damages caused by Hurricane Floyd beginning on September 13, 1999, and continuing: Accomack, Chesterfield, Greensville, Isle of Wight, James City, King and Queen, Lancaster, Middlesex, Northumberland, Prince George, Southampton, Surry, Sussex, and York Counties, and the Independent Cities of Chesapeake, Colonial Heights, Emporia, Franklin, Hampton, Newport News, Norfolk, Petersburg, Portsmouth, and Virginia Beach. Applications for loans for physical damage as a result of this disaster may be filed until the close of business on November 16, 1999, and for loans for economic injury until the close of business on June 19, 2000 at the address listed below or other locally announced locations: U.S. Small Business Administration, Disaster Area 1 Office, 360 Rainbow Blvd., South, 3rd Floor, Niagara Falls, NY 14303.

In addition, applications for economic injury loans from small businesses located in the following contiguous Counties and Independent Cities may be filed until the specified date at the above location: Amelia, Brunswick, Charles City, Dinwiddie, Essex, Gloucester, Goochland, Henrico, King William, Mathews, New Kent, Northampton, Powhatan, Richmond, and Westmoreland Counties, and the Independent Cities of Hopewell, Poquoson, Richmond, Suffolk, and Williamsburg in Virginia, and Somerset and Worcester Counties in Maryland.

Any counties contiguous to the above-named primary counties and not listed herein have been declared under a separate declaration for the same occurrence.

The interest rates are:

For Physical Damage:

Homeowners with credit available elsewhere—7.250%

Homeowners without credit available elsewhere—3.625%

Businesses with credit available elsewhere—8.000%

Businesses and non-profit organizations without credit available elsewhere—4.000%

Others (including non-profit organizations) with credit available elsewhere—7.000%

For Economic Injury

Businesses and small agricultural cooperatives without credit available elsewhere—4.000%

The number assigned to this disaster for physical damage is 321308. For economic injury the numbers are 9E7100 for Virginia and 9E8500 for Maryland.

(Catalog of Federal Domestic Assistance Program Nos. 59002 and 59008)

Dated: September 23, 1999.

Bernard Kulik,

Associate Administrator for Disaster Assistance.

[FR Doc. 99–25913 Filed 10–5–99; 8:45 am]

BILLING CODE 8025–01–P

DEPARTMENT OF STATE

[Public Notice 3128]

Transfer of the United States Information Agency's Systems of Records to the Department of State

AGENCY: Bureau of Administration, Department of State.

ACTION: Notice.

SUMMARY: In accordance with the Privacy Act, (5 U.S.C. 552a(e)(4)) this notice describes a revision to the character of the United States Information Agency's (''USIA'') systems of records upon the consolidation of USIA and the Department of State as mandated by the Foreign Affairs Agencies Consolidation Act of 1998.

DATES: Effective October 1, 1999.

FOR FURTHER INFORMATION CONTACT: Margaret P. Grafeld, Information and Privacy Coordinator and Director of the Office of Information Resources Management Programs and Services; Department of State; 515 21st Street, NW, Washington, DC 20522–6001, (202) 261–8300 or the website at http://foia.state.gov.

SUPPLEMENTARY INFORMATION: Under the Foreign Affairs Agencies Consolidation Act of 1998, Public Law 105–277, USIA and the Department of State will be consolidated on October 1, 1999. As part of the consolidation, the Department will assume custody and control of systems of records currently maintained by USIA except for systems of records relating to broadcasting functions which will be maintained by the Broadcasting Board of Governors. The existence and distinct character of these systems will not change except for the following effective October 1, 1999:

1. The agency official who is responsible for access to the systems of records is Margaret P. Grafeld, Information and Privacy Coordinator and Director of the Office of Information Resources Management Programs and Services; Department of State; 515 21st Street, NW; Washington, DC 20522–6001, (202) 261–8300.

2. The procedures whereby an individual can be notified if the system of records contains a record pertaining to him or her may now be found at 22 CFR part 171, subpart C. These regulations are also available at the Department's website located at http://foia.state.gov.

3. The procedures whereby an individual can gain access to any records pertaining to him or her contained in the system of records, and how he or she can contest its content may now be found at 22 CFR part 171, subpart C. These regulations are also available at the Department's website located at http://foia.state.gov.

Dated: October 1. 1999.

Patrick F. Kennedy,

Assistant Secretary for the Bureau of Administration, Department of State.

[FR Doc. 99–26082 Filed 10–5–99; 8:45 am]

BILLING CODE 4710–10–P

DEPARTMENT OF TRANSPORTATION

Federal Aviation Administration

RTCA Special Committee 194; ATM Data Link Implementation

Pursuant to section 10(a)(2) of the Federal Advisory Committee Act (P.L. 92–463, 5 U.S.C., Appendix 2), notice is hereby given for Special Committee 194 meeting to be held November 1–4, 1999, starting at 8:30 a.m. on November 1 and at 9:00 a.m. on November 2–4. The meeting will be held at RTCA, 1140 Connecticut Ave., NW, Suite 1020, Washington, DC 20036.

The agenda will include: November 1: 8:30 a.m. to 12 Noon, Working Group (WG) 2; 1:00–5:00 p.m., Plenary: (1) Welcome and Introductions; (2) Review meeting agenda; (3) Review/Approve previous meeting summary; (4) Distribute Ballot Comments for WG–1 Documents; (5) Presentation of WG–1 documents: ''Guiding Principles for ATS Provided Via Data Communications Utilizing the ATN'' and ''U.S. NAS Plan for ATS Data Link (Phase 1, En Route CONUS Implementation (WG–1));'' November 2: Working Group meetings; (6) Data Link Ops Concept & Implementation Plan (WG–1); (7) Flight Operation & ATM Integration (WG–2); (8) Human Factors (WG–3), and (9) Service Provider Interface (WG–4); November 3; (10) Working Groups 1–4 continue; November 4: Plenary Session (11) Working Group reports: (12) Update on work programs and expected document completion dates; (13) Review, discussion, disposition of ballot comments on WG–1 Documents; (14) Other Business; (15) Date and location of next meeting; (16) Closing.

Attendance is open to the interested public but limited to space availability. With the approval of the chairman, members of the public may present oral statements at the meeting. Persons wishing to present statements or obtain information should contact the RTCA Secretariat, 1140 Connecticut Avenue, NW., Suite 1020, Washington, DC 20036; (202) 833–9339 (phone); (202) 833–9434 (fax); or http//www.rtca.org (web site). Members of the public may present a writtten statement to the committee at any time.

Issued in Washington, DC, on September 30, 1999.

Janice L. Peters,

Designated Official.

[FR Doc. 99–26056 Filed 10–5–99; 8:45 am]

BILLING CODE 4910–13–M

DEPARTMENT OF TRANSPORTATION

Federal Aviation Administration

RTCA Special Committee 195; Flight Information Services Communications (FISC)

Pursuant to section 10(a)(2) of the Federal Advisory Committee Act (P.L. 92–463, 5 U.S.C., Appendix 2), notice is hereby given for Special Committee (SC)–195 meeting to be held October 27–28, starting at 8:30 a.m. each day. The meeting will be held at RTCA, Inc., 1140 Connecticut Avenue, NW, Suite 1020, Washington, DC 20036.

The agenda will include: October 27: (1) Welcome and introductions; (2) Review Terms of Reference for Working Group 1 on Colors, Textures and Descriptors; (3) Review FIS–B Minimum Aviation System Performance Standards (MASPS) Section 4.0, Procedures for Performance Requirement Verification; (4) Review FIS–B MASPS Proposed Section 3.2.1, FIS Broadcast Network Interface; (5) Review FIS–B Proposed Appendix D, APDU Header Format. October 28: (6) Discussion of Geographic Reference and Compression Methods; (7) Review FIS–B MASPS Proposed Appendix E Products; (8) Review Action Items; (9) Discuss Schedule for FIS–B MASPS Industry Ballot; (10) Review SC–195 Work Plan; (11) Closing.

Attendance is open to the interested public but limited to space availability. With the approval of the chairman, members of the public may present oral statements at the meeting. Persons wishing to present statements or obtain information should contact the RTCA Secretariat, 1140 Connecticut Avenue, NW, Suite 1020, Washington, DC 20036; (202) 833–9339 (phone); (202) 833–9434 (fax); or http://www.rtca.org (web site). Members of the public may present a written statement to the committee at any time.

Issued in Washington, DC, on September 28, 1999.

Janice L. Peters,

Designated Official.

[FR Doc. 99–26057 Filed 10–5–99; 8:45 am]

BILLING CODE 4910–13–M

DEPARTMENT OF TRANSPORTATION

Federal Aviation Administration

[Policy Statement Number ANM–99–2]

Guidance for Reviewing Certification Plans To Address Human Factors for Certification of Transport Airplane Flight Decks

AGENCY: Federal Aviation Administration (FAA), DOT.

ACTION: Notice of policy statement; request for comments.

SUMMARY: This document announces an FAA general statement of policy that is applicable to the type certification process of transport category airplanes. This policy provides guidance to FAA Certification Teams that will enable them to conduct an effective review of an applicant's Human Factors Certification Plan or the human factors components of a general Certification Plan, when one is submitted at the beginning of a type certification (TC), supplemental type certification (STC), or amended type certificate (ATC) project. This guidance describes the sections of a Human Factors Certification Plan and the information that should be included in each section. The purpose of the plan is to facilitate the establishment early on of an effective working relationship and agreement between the FAA and the applicant about the means by which human factors issues will be addressed during a certification project. This notice is to advise the public of FAA policy and give all interested persons an opportunity to review and comment on the policy statement.

DATES: Comments must be received on or before November 5, 1999.

ADDRESSES: Send all comments on this policy statement to the individual identified under **FOR FURTHER INFORMATION CONTACT.**

FOR FURTHER INFORMATION CONTACT: Sharon Hecht, Federal Aviation Administration, Transport Airplane Directorate, Transport Standards Staff, Airplane & Flight Crew Interface Branch, ANM–111, 1601 Lind Avenue SW., Renton, Washington 98055–4056; telephone (425) 227–2398; facsimile (425) 227–1100; e-mail: 9–ANM–111–HUMAN FACTORS@faa.gov.

SUPPLEMENTARY INFORMATION:

Comments Invited

Interested persons are invited to submit written comments on this policy statement. Commenters should identify the Policy Statement Number of this policy statement, and submit comments,

in duplicate, to the address specified above. All communications received on or before the closing date for comments will be considered by the Transport Standards Staff of the Transport Airplane Directorate.

Effect of General Statement of Policy

The general policy stated in this document is not intended to establish a binding norm; it does not constitute a new regulation, and the FAA would neither apply nor rely upon it as a regulation. The FAA Aircraft Certification Offices (ACO) that certify transport category airplanes and/or the flight deck systems installed on them should attempt to follow this policy, when appropriate. However, in determining compliance with certification standards, each FAA office has the discretion not to apply these guidelines where it determines that they are inappropriate.

Background

Recent aviation safety reports underscore the importance of addressing issues related to human factors and flightcrew error in system design and certification. Applicants have demonstrated the effectiveness of using a ''Human Factors Certification Plan'' to communicate their proposed approach to the identification and resolution of human factors issues. This type of plan has been used as a means by which the applicant and the FAA can establish an early and formal written agreement on the certification basis, the methods of compliance, and the schedules for completing the certification project. This approach has helped FAA Certification Teams address issues as early in the certification process as possible, thereby decreasing the applicant's certification risk in cost or schedule.

An alternative approach to developing a stand-alone Human Factors Certification Plan is for the applicant to address the human factors issues as part of their general Certification Plan. Regardless of whether it is a stand-alone document or not, the trend has been for applicants to provide some specific information about their plans to address human factors issues for the certification project.

Because of the proven effectiveness of this type of approach, increasing numbers of applicants have asked for assistance from the FAA in developing Human Factors Certification Plans. Given this trend, the Transport Airplane Directorate has developed this policy to assist FAA Certification Team members in working with applicants who are attempting to develop Human Factors Certification Plans, as well as in reviewing these plans after they have been submitted.

Objective of This Policy

The objective of this policy is to provide guidance for the FAA Certification Team to use when reviewing the applicant's Human Factors Certification Plan or the human factors components of the general Certification Plan during a type certification (TC), supplemental type certification (STC), or amended type certificate (ATC) project for transport category airplanes. The policy is intended for use by all members of the Certification Team, which may include the following:

- Aircraft evaluation group inspectors,
- Avionics engineers,
- Certification Team project managers,
- Flight test pilots and engineers,
- Human factors specialists,
- Propulsion engineers, and
- Systems engineers.

While this policy is focused on providing guidance to these FAA team members, it may be of use to the applicant, as well. If the applicant develops a Certification Plan for a certification project, the information in this policy statement can be used as a basis for communicating the applicant's approach to addressing the human factors aspects of the project.

This policy is one portion of an overall FAA strategy for the development of policies related to human factors in the certification of flight decks on transport category airplanes. Future policy development will cover the following areas, related to showing compliance with regulatory requirements associated with human factors:

- Information on the recommended content of certification plans.
- Information on how to determine the adequacy of an applicant's proposed methods of compliance.
- Information on how to determine the adequacy of an applicant's proposed test plans intended to support certification.
- Information on how to determine pass-fail criteria for analyses and tests performed to support certification.

Relevant reference material can be found in Appendix B of this policy statement.

A checklist is included in Appendix D of this policy statement, which can be used as part of certification plan review. It covers all of the sections listed below.

General Statement of Policy—Guidance for Reviewing Certification Plans To Address Human Factors for Certification of Transport Airplane Flight Decks

The guidance provided in the following sections is intended to help the Certification Team members review a Human Factors Certification Plan submitted by an applicant. It is organized into nine sections, which are consistent with those suggested for a Certification Plan in FAA Advisory Circular (AC) 21–40, ''Application Guide for Obtaining a Supplemental Type Certificate.'' Those sections are:

1. Introduction
2. System Description
3. Certification Requirements
4. Methods of Compliance
5. System Safety Assessments
6. Operational Considerations
7. Certification Documentation
8. Certification Schedule
9. Use of Designees and Identification of Individual DER/DAR

Guidance is provided in this general statement of policy concerning the information that would be appropriate to include in each of these sections for either a Human Factors Certification Plan or a general Certification Plan. A sample (hypothetical) Human Factors Certification Plan can be found in Appendix C of this general statement of policy.

Note: While Appendix C is included as part of this policy statement document, the FAA also plans to provide it as a separate web site on the Internet, where it can become a ''living document'' and be updated as new information, processes, and technology become available.

1. Introduction

This section of the Certification Plan should provide a short overview of the certification project, the certification program in general, and the purpose of the Human Factors Certification Plan specifically.

2. System Description

This section of the Certification Plan should describe the general features of the flight deck, system, or component being presented as part of a certification project. Because a human factors perspective of the flight deck includes the systems, the users (flightcrew members), and the ways in which they interact (e.g., crew procedures), this section of the Human Factors Certification Plan may include general descriptions of all three. The applicant can use this section to ensure that the Certification Team and the applicant have a common understanding of the basic design concepts as well as the

principles and operational assumptions that underlie the design of the flightcrew interfaces.

For the purposes of this policy, the term ''flightcrew interface'' is intended to cover both the design of the systems (hardware, software) and the tasks (physical, cognitive, perceptual, procedural) the pilots will perform when using the systems in the context of their overall responsibilities.

The applicant should give special attention to any new or unique features or functions and how the flightcrew will use them. Specifically, the following topic areas may be included:

2.a. *Intended Function:* The Human Factors Certification Plan should provide information describing the intended functions of the major flightcrew interfaces. For each, the applicant should identify the following items, as appropriate, focusing on new or unique features that affect the crew interface or the allocation of tasks between the pilot(s) and the airplane systems:

- The intended function of the system from the pilot's perspective.
- The role of the pilot relative to the system.
- The procedures (e.g., type of approach procedures) expected to be flown.
- The assumed airplane capabilities (e.g., communication, navigation, and surveillance).

2.b. *Flight Deck Layout Drawings:* Drawings of the flight deck layout, even if they are only preliminary, can be very beneficial for providing an understanding of the intended overall flight deck arrangement (controls, displays, sample display screens, seating, stowage, etc.). The applicant should be encouraged to provide scheduled updates to the drawings, so that the Certification Team's knowledge of the layout progresses as the design matures. Special attention should be given to any of the following that are novel or unique:

- Arrangements of the controls, displays, or other flight deck features or equipment.
- Controls, such as a cursor control device, or new applications of existing control technologies.
- Display hardware technology.

For the items identified above, sketches of the crew interfaces for the specific systems can be helpful in providing an early understanding of the features that may have certification issues. The applicant should include with the drawings descriptions of interface, button, knob function, anticipated system response, alerting mechanism, mode annunciation, etc., so that the documentation adequately covers each component or system that the pilot must interact with.

2.c. *Underlying Principles for Automation Logic:* For designs that involve significant automation, the way the automation operates and communicates that operation to the pilot can have significant effects on safety. Key topics could include the following:

- Operating modes.
- Principles underlying mode transitions.
- Mode annunciation scheme.
- Automation engagement/disengagement principles.
- Preliminary logic diagrams, if available.

2.d. *Underlying Principles for Crew Procedures:* Because the design of the systems and the development of the associated procedures are interrelated, it is useful to describe the underlying guidelines or principles that form the basis for the crew procedures. Key topics could include the following:

- The expected use of memorized procedures with confirmation checklists vs. read-and-do procedures/checklists.
- Crew interactions during procedure/checklist accomplishment.
- Automated support for procedures/checklists, if available.

2.e. *Assumed Pilot Characteristics:* The applicant may choose to include a description of the pilot group that the manufacturer expects will use the flight deck design. This description could include assumptions about the following:

- Previous flying experience (e.g., ratings, flying hours).
- Experience with similar or dissimilar flight deck designs and features, including automation.
- Expected training that the pilots will receive on this flight deck design, or assumptions regarding expected training.

3. Certification Requirements

This section should list and describe the human factors-related regulations and other requirements that are being addressed by the applicant's Human Factors Certification Plan. This section also may include the applicant's compliance checklist for these requirements.

The Certification Team should expect to see a matrix from the applicant with all of the pertinent regulations listed, with specific references to the detailed subparagraphs that will be covered by the Human Factors Certification Plan.

Table 1, below, provides a partial list of regulations contained in 14 CFR part 25 that may be considered for inclusion in a Human Factors Certification Plan. These regulations were selected for the list because they typically require that the applicant carefully consider a number of human factors issues when showing compliance with them.

Appendix B of this document also lists these regulations, along with a brief discussion of some of the human factors issues that may affect the chosen methods of compliance.

Note: While Appendix B is included as part of this policy statement document, the FAA also plans to provide it as a separate web site on the Internet, where it can become a ''living document'' and be updated as new information, processes, and technology become available.

TABLE 1.—SELECTED LISTING OF REGULATIONS IN 14 CFR PART 25 RELATED TO FLIGHTCREW HUMAN FACTORS

FAR Section [Current Amdt. Level]	Requirement (In some cases, the content of the subparagraphs has been paraphrased for clarity. Actual Human Factors Certification Plans should use the exact wording of the regulations.)
General Human Factors (HF) Requirements	
§ 25.771(a) [amdt. 25–4]	Each pilot compartment and its equipment must allow the minimum flightcrew to perform their duties without unreasonable concentration or fatigue.
§ 25.771(e) [amt. 25–4]	Vibration and noise characteristics of cockpit equipment may not interfere with safe operation of the airplane.
§ 25.773(a)(1) [amdt. 25–72]	Each pilot compartment must be arranged to give the pilots sufficiently extensive, clear, and undistorted view, to enable them to safely perform any maneuvers within the operating limitations of the airplane, including takeoff, approach, and landing.
§ 25.773(a)(2) [amt. 25–72]	Each pilot compartment must be free of glare and reflections that could interfere with the normal duties of the minimum flightcrew.

TABLE 1.—SELECTED LISTING OF REGULATIONS IN 14 CFR PART 25 RELATED TO FLIGHTCREW HUMAN FACTORS—Continued

FAR Section [Current Amdt. Level]	Requirement (In some cases, the content of the subparagraphs has been paraphrased for clarity. Actual Human Factors Certification Plans should use the exact wording of the regulations.)
§ 25.777(a) [amdt. 25–46]	Each cockpit control must be located to provide convenient operation and to prevent confusion and inadvertent operation.
§ 25.777(c) [amt. 25–46]	The controls must be located and arranged, with respect to the pilot's seats, so that there is full and unrestricted movement of each control without interference from the cockpit structure or the clothing of the minimum flightcrew when any member of this flightcrew, from 5'2'' to 6'3'' in height, is seated with the seat belt and shoulder harness fastened.
§ 25.1301(a) [original amdt.]	Each item of installed equipment must be of a kind and design appropriate to its intended function.
§ 25.1309(b)(3) [amt. 25–41]	* * * Systems, controls, and associated monitoring and warning means must be designed to minimize crew errors that could create additional hazards.
§ 25.1321(a) [amdt. 25–41]	* * * Each flight, navigation, and powerplant instrument for use by any pilot must be plainly visible to him from his station with the minimum practicable deviation from his normal position and line of vision when he is looking forward along the flight path.
§ 25.1321(e) [amt. 25–41]	If a visual indicator is provided to indicate malfunction of an instrument, it must be effective under all probable cockpit lighting conditions.
§ 25.1523 [amdt. 25–3]	The minimum flightcrew must be established so that it is sufficient for safe operation, considering (a) the workload on individual crewmembers; (b) the accessibility and ease of operation of necessary controls by the appropriate crewmember; and (c) the kind of operation authorized under § 25.1525. The criteria used in making the determinations required by this section are set forth in Appendix D.
§ 25.1543(b) [amt. 25–72]	Each instrument marking must be clearly visible to the appropriate crewmember.
System-Specific HF Requirements	
§ 25.785(g) [amdt. 25–88]	Each seat at a flight deck station must have a restraint system * * * that permits the flight deck occupant, when seated with the restraint system fastened, to perform all of the occupant's necessary flight deck functions.
§ 25.785(l) [amt. 25–88]	The forward observer's seat must be shown to be suitable for use in conducting the necessary enroute inspections.
§ 25.1141(a) [amdt. 25–72]	Powerplant controls: Each control must be located so that it cannot be inadvertently operated by persons entering, leaving, or moving normally in the cockpit.
§ 25.1357(d) [original amdt.]	If the ability to reset a circuit breaker or replace a fuse is essential to safety in flight, that circuit breaker or fuse must be located and identified so that it can be readily reset or replaced in flight.
§ 25.1381(a)(2) [amdt. 25–72]	The instrument lights must be installed so that (ii) no objectionable reflections are visible to the pilot.
Specific Crew Interface Requirements	
§ 25.773(b)(2)(i) [amt. 25–72]	The first pilot must have a window that is openable * * * and gives sufficient protection from the elements against impairment of the pilot's vision.
§ 25.1322 [amdt. 25–38]	If warning, caution, or advisory lights are installed in the cockpit, they must, unless otherwise approved by the Administrator, be: (a) Red, for warning lights (lights indicating a hazard which may require immediate corrective action); (b) Amber, for caution lights (lights indicating the possible need for future corrective action); (c) Green for safe operation lights; and (d) Any other color, including white, for lights not described in paragraphs (a) through (c) of this section, provided the color differs sufficiently from the colors prescribed in paragraphs (a) through (c) of this section to avoid possible confusion.

4. Methods of Compliance

The Certification Team should request the detailed plans for showing compliance as the plans evolve with the program. It is recommended that coordination meetings with the applicant and Certification Team be held several times during the certification program to review the compliance checklist in detail and the associated test plans, as they are developed. This will help all parties reach agreement on how the tests, demonstrations, and other data-gathering efforts will be sufficient to show compliance. Of special importance is ensuring that the methods proposed by the applicant will provide enough fidelity to identify human factors issues early enough to avoid adversely affecting the certification schedule.

A suggested format for the compliance checklist is contained in FAA Advisory Circular (AC) 21–40, ''Application Guide for Obtaining a Supplemental Type Certificate,'' dated May 6, 1998. An example of a checklist can be found in Appendix D of this policy statement.

Note: While Appendix D is included as part of this policy statement document, the FAA also plans to provide it as a separate web site on the Internet, where it can become a ''living document'' and be updated as new information, processes, and technology become available.

In this section of the Human Factors Certification Plan, the applicant should delineate the methods that will be used to demonstrate compliance with the relevant regulations. The review and discussion of the methods of compliance is an opportunity for the FAA and the applicant to work together to identify potential human factors issues early in the certification program.

The methods of compliance are not mutually exclusive. The applicant may choose to include any or all of these methods of compliance in its Human Factors Certification Plan. All of the methods of compliance included in the Human Factors Certification Plan should be described in enough detail to

give the Certification Team confidence that the results of the chosen method will provide the necessary information for finding compliance. Examples of methods to demonstrate compliance are as follows:

4.a. *Drawings:* Layout drawings and/or engineering drawings that show the geometric arrangement of hardware or display graphics.

4.b. *Configuration Description:* A description of the layout, arrangement, direction of movement, etc., or a reference to similar documentation.

4.c. *Statement of Similarity:* A description of the system to be approved and a previously approved system, which details their physical, logical, and operational similarities, with respect to compliance with the regulations.

4.d. *Evaluations, Assessments, Analyses:* Evaluations conducted by the applicant or others (not the FAA or a designee), who provides a report to the FAA. These include:

- Engineering Evaluations or Analyses: These assessments can involve a number of techniques, including such things as procedure evaluations (complexity, number of steps, nomenclature, etc); reach analysis via computer modeling; time-line analysis for assessing task demands and workload; or other methods, depending on the issue being considered.
- Mock-up Evaluations: These types of evaluations use physical mock-ups of the flight deck and/or components. They are typically used for assessment of reach and clearance; thus, they demand a high degree of geometric accuracy.
- Part-Task Evaluations: These types of evaluations use devices that emulate (using flight hardware, simulated systems, or combinations) the crew interfaces for a single system or a related group of systems. Typically, these evaluations are limited by the extent to which acceptability may be affected by other flight deck tasks.
- Simulator Evaluations: These types of evaluations use devices that present an integrated emulation (using flight hardware, simulated systems, or combinations) of the flight deck and the operational environment. They also can be ''flown,'' with response characteristics that replicate, to some extent, the responses of the airplane. Typically, these evaluations are limited by the extent to which the simulation is a realistic, high fidelity representation of the airplane, the flight deck, the external environment, and crew operations. The types of pilots (test, instructor, airline) used in the evaluations and the training they receive may significantly affect the results and their utility.
- In-Flight Evaluations: These types of evaluations use the actual airplane. Typically, these evaluations are limited by the extent to which the flight conditions of particular interest (e.g., weather, failures, unusual attitudes) can be located/generated and then safely evaluated in flight. The types of pilots (test, instructor, airline) used in the evaluations and the training they receive may significantly affect the results and their utility.

4.e. *Demonstrations:* Similar to evaluations (described above), but conducted by the applicant with participation by the FAA or its designee. The applicant provides a report, requesting FAA concurrence on the findings. Examples of demonstrations include:

- Mock-up Demonstrations.
- Part-Task Demonstration.
- Simulator Demonstration.

4.f. *Inspection:* A review by the FAA or its designee, who will be making the compliance finding.

4.g. *Tests:* Evaluations conducted by the FAA or a designee, which may encompass:

- Bench Tests: These are tests of components in a laboratory environment. This type of testing is usually confined to showing that the components perform as designed. Typical bench testing may include measuring physical characteristics (e.g., forces, luminance, format) or logical/dynamic responses to inputs, either from the user or from other systems (real or simulated).
- Ground Tests: These are tests conducted in the actual airplane, while it is stationary on the ground. In some cases, specialized test equipment may be employed to allow the airplane systems to behave as though the airplane was airborne.
- Simulator Tests: (See simulator evaluations, above.)
- Flight Tests: These are tests conducted in the actual airplane. The on-ground portions of the test (e.g., preflight, engine start, taxi) are typically considered flight test rather than ground test.

The methods identified above cover a wide spectrum: from documents that simply describe the product, to partial approximations, to methods that replicate the actual airplane and its operation with great accuracy. Features of the product being certified and the types of human factors issues to be evaluated are key considerations when selecting which method is to be used. The characteristics described below can be used to help in coming to agreement regarding what constitutes the minimum acceptable method(s) of compliance for any individual requirement.

When a product needs to meet multiple requirements, some requirements may demand more complex testing while others can be handled using simple descriptive measures. It is important to note that the following characteristics are only general principles. They are intended to form the basis for discussions regarding acceptable methods of compliance for a specific product with respect to a requirement.

4.h. *Other Considerations:*

- Degree of Integration/Independence: If the product to be approved is a stand-alone piece of equipment that does not interact with other aspects of the crew interface, less integrated methods of compliance may be acceptable. However, if the product is tightly tied to other systems in the flight deck, either directly or by the ways crews use them, it may be necessary to use methods that allow the testing of those interactions.
- Novelty/Past Experience: If the technology is mature and well understood, less rigorous methods may be appropriate. More rigorous methods may be called for if the technology is new, is used in some new application, is new for the particular applicant, or is unfamiliar to the certification personnel.
- Complexity/Level of Automation: More complex and automated systems typically require test methods that will reveal how that complexity will manifest itself to the pilot, in normal and backup or reversionary modes of operation.
- Criticality: Systems that are central to the interface design may require testing in the most realistic environments (high-quality simulation or flight test), because any problems are likely to have serious consequences.
- Dynamics: If the control and display features of the product are highly dynamic, the compliance methods should be capable of replicating those dynamic conditions.
- Level of Training Required: If the product is likely to require a significant amount of training to operate, the interfaces may need to be evaluated in an environment that replicates the full spectrum of activities in which the pilot may be involved.
- Subjectivity of Acceptance Criteria: Requirements that have specific, objectively measurable criteria can often employ simpler methods for demonstrating compliance. As the acceptance criteria become more subjective, more integrated test methods are needed, so that the evaluations take into account the aspects of the integrated flight deck that may affect those evaluations.

The main objective is to carefully match the method to the product and the underlying human factors issues. It is also important for the Certification Team to recognize that several methods may be acceptable for any given requirement and applicants should be allowed to select among the acceptable methods, choosing the ones that best fit their compliance strategy, schedule, and cost considerations.

5. System Safety Assessments

Typically, system safety assessments [i.e., Functional Hazard Assessment (FHA), Failure Modes and Effects Analysis (FMEA), Fault Tree Analysis, etc.] are accomplished by the applicant's engineering group that is responsible for each system. However, for each assessment planned, the

applicant should describe how any human factors elements will be addressed (such as crew responses to failure conditions) and other assumptions that must be made about crew behavior. These assumptions should be reviewed by the full Certification Team to ensure that no assumptions are being made that will require the flightcrew to compensate for failures beyond their expected capabilities. These human factors considerations can be documented in the individual system safety assessments, or the applicant may elect to describe them in the Human Factors Certification Plan, with references to the associated system safety assessments.

6. Operational Considerations

The applicant may have specific goals associated with the operational certification of the airplane or system that could influence the design and its evaluation. In this section, the applicant will typically describe how these operational considerations will be integrated into the part 25 aspects of the certification project. It would be useful to identify operational requirements that have been factored into the type design. For example, the Traffic Alert and Collision Avoidance System (TCAS) is mandated as a rule change in part 121 rather than in part 25.

This section of the Certification Plan also may include how the operational certification, as captured in the following documents, will influence the methods of compliance:

- Airplane Flight Manual (AFM),
- Master Minimum Equipment List (MMEL)
- Flightcrew Operating Manual (FCOM), and
- Quick Reference Handbook (QRH).

Shown below are two examples of how the operational and airworthiness considerations may be interdependent:

Example 1. The applicant may desire MMEL dispatch relief for certain systems. In order to ensure that the desired dispatch relief will be approved, it may be advantageous to conduct certification testing of those configurations (including the next most significant failures), to ensure that they are acceptable for normal operations.

Example 2. In order to help ensure acceptance of the FCOM, it may be advantageous to conduct certification testing using the procedures and other relevant information that will be included in the FCOM. This will enable the members of the Airplane Evaluation Group (AEG) to have a high degree of confidence that there will be no human factors problems associated with their use.

The AEG, Flight Standards Operations representatives, and Human Factors Specialists on the Certification Team should be involved in the review of this section of the Human Factors Certification Plan.

7. Certification Documentation

The Human Factors Certification Plan should indicate the types of documentation that will be submitted to show compliance or otherwise document the progress of the certification program. This section may list the specific documentation (test report number, analysis report number, etc.) that will be used to support compliance with the subject regulation. They may also be indicated in the compliance matrix.

8. Certification Schedule

This section of a Human Factors Certification Plan should include the major milestones of the certification program. This may include:

8.a. *Certification Plan Submittals:* The Certification Team should expect periodic updates to the Human Factors Certification Plan as the certification program progresses. The applicant should be encouraged to submit the first Human Factors Certification Plan as soon as possible after the start of the program. The applicant should be reassured that draft, preliminary information is acceptable and appropriate, provided that it is updated and finalized in a timely manner (as documented in the schedule and agreed to jointly by the FAA and the applicant).

8.b. *Flight Deck Reviews, Early Prototype Reviews, Simulator Reviews, and Flight Test Demonstrations:* The Human Factors Certification Plan can document planned design reviews. Even in cases where the reviews are not directly associated with finding compliance, they can be very helpful in the following ways:

- Providing the Certification Team with an accurate and early understanding of the crew interface tradeoffs and design proposals.
- Allow the certification team to provide the applicant with early feedback on any potential certification issues.
- Support cooperative teaming between the applicant and the certification team, in a manner consistent with the Certification Process Improvement initiative.

8.c. *Coordination meetings:* Coordination meetings with other certification authorities, or meetings with other FAA Aircraft Certification Offices on components of the same certification project or related projects, should be documented in the schedule.

The Certification Team can use the information in the schedule to determine if sufficient coordination and resources are planned for the certification program.

9. Use of Designees and Identification of Individual DER/DAR

This section should describe how the applicant will make use of Designated Engineering Representatives (DER), Designated Airworthiness Representatives (DAR), or other designees during the certification program.

Appendix A—Partial List of Part 25 Regulations Related to Human Factors Issues

The following list of regulations is divided into the following three categories:

1. General Human Factors Requirements: Rules that deal with the acceptability of the flight deck and crew interfaces across a variety of systems/features.
2. Specific Human Factors Requirements: Rules that deal with the acceptability of a specific feature or function in the flight deck.
3. Specific Crew Interface Requirements: Rules that mandate a specific system feature, which must be implemented in an acceptable manner.

This list is not intended to include all regulations associated with flightcrew interfaces. However, these represent some of the requirements for which demonstrating compliance can be problematic. In some cases, where only subparagraphs are noted, they have been paraphrased for clarity; the applicant should use the exact wording of the regulation in all plans and compliance documents.

In many cases, there may be no precise standard of acceptability. Therefore, it is in the applicant's best interest to carefully consider and describe how they plan to come to agreement with the FAA with respect to compliance. The highlighted words identify the key issues that are central to finding compliance and that could be addressed using various methods. Following each regulatory requirement are notes intended to help the applicant select an appropriate method of compliance. Typically, the Certification Plan would only identify and generally describe the methods to be used. Detailed descriptions of analyses and tests would be documented separately (e.g., in test plans), subsequent to an agreed-upon Certification Plan. However, the applicant should sufficiently develop the plans to assure themselves and the FAA that the selected methods are appropriate and adequate.

1. General Human Factors Requirements

- *Section 25.771(a) [at amdt. 25–4]:*

Each pilot compartment and its equipment must allow the minimum flightcrew to perform their duties without *unreasonable concentration or fatigue.*

Discussion: The applicant should carefully consider the aspects of the flightcrew interface that might require significant or sustained mental or physical effort, or might otherwise result in fatigue. Other factors affecting fatigue, such as noise and seat comfort, also may need to be evaluated. Methods of compliance should be selected based on the potential concentration demands and sources of fatigue for the flightcrew. Comparisons to previously certificated designs are often a useful method, although testing may be warranted for new designs.

• *Section 25.771(e) [at amdt. 25–4]:*

Vibration and noise characteristics cockpit equipment *may not interfere* with safe operation of the airplane.

Discussion: When determining the method of compliance, the applicant should carefully consider the types/magnitudes of the vibration and noise that may be present under both normal and abnormal conditions. Then, tasks that may be affected by vibration (e.g., display legibility and the operation of controls) and noise (e.g., communication and identification of aural alerts) should be identified, as well as the methods that could be employed to determine whether or not the vibration or noise will unacceptably interfere with safe operation of the airplane.

• *Section 25.773(a)(1) [at amdt. 25–72]:*

Each pilot compartment must be arranged to give the pilots *sufficiently extensive, clear, and undistorted view*, to enable them to safely perform any maneuvers within the operating limitations of the airplane, including takeoff, approach, and landing.

Discussion: The applicant should carefully consider the method of compliance described in FAA Advisory Circular (AC) 25.773–1, ''Pilot Compartment View for Transport Category Airplanes.''

• *Section 25.773(a)(2) [at amdt. 25–72]:*

Each pilot compartment must be free of glare and reflections *that could interfere* with the normal duties of the minimum flightcrew.

Discussion: The applicant may be able to develop analytical techniques that identify potential sources of glare and reflections, as a means for reducing the risk of problems identified after the major structural features have been committed. Mock-ups also may be a useful means for early assessments. However, analysis results typically must be verified in an environment with a high degree of geometric and optical fidelity. Both internal (e.g., area and instrument lighting) and external (e.g., shafting sunlight) sources of reflections should be considered.

• *Section 25.777(a) [at amdt. 25–46]:*

Each cockpit control must be located to provide *convenient operation* and to prevent *confusion and inadvertent operation*.

Discussion: The applicant may choose to use physical mock-ups for preliminary evaluations. Simulators, if available, provide a more powerful evaluation environment, because they allow the evaluation to take place in a flight scenario, which may influence convenience and inadvertent operation. Simulator evaluations may reduce the need for flight testing.

• *Section 25.777(c) [at amdt. 25–46]:*

The controls must be located and arranged, with respect to the pilot's seats, so that there is *full and unrestricted movement of each control* without interference from the cockpit structure or the clothing of the minimum flightcrew when any member of this flightcrew, from 5'2'' to 6'3'' in height, is seated with the seat belt and shoulder harness fastened.

Discussion: The applicant may choose to use analytical methods, such as computer modeling of the flight deck and the pilots, for early risk reduction and to supplement certification evaluations using human subjects. Computer modeling allows for more control over the dimensions of the pilot model and, thus, may allow the assessment of otherwise unavailable combinations of body dimensions. The applicant should carefully consider the advantages and limitations of each of these methods.

• *Section 25.1301(a) [original amdt.]:*

Each item of installed equipment must be of a *kind and design appropriate to its intended function*.

Discussion: The applicant may wish to consider a number of methods for showing compliance with this requirement, with respect to human factors. For example, service experience may be an effective means for assessing systems with well-understood, successful crew interfaces, assuming that other factors, such as changes in the operational environment, do not affect the relevance of that experience. Various requirements analysis techniques can be used to show that the information that the pilot needs to perform key tasks is available, usable, and timely. Simulation may be used to verify that properly trained pilots can adequately perform all required tasks, using the controls and displays provided by the design, in realistic scenarios and timelines. Finally, flight tests can be used to investigate specific normal and abnormal operational scenarios.

• *Section 25.1309(b)(3) [at amdt. 25–41]:*

* * * Systems, controls, and associated monitoring and warning means must be designed to *minimize crew errors* that could create additional hazards.

Discussion: The applicant may wish to perform analyses of crew procedures in response to system faults. This can be especially important in cases where the applicant wishes to take certification credit (e.g., in a Fault Tree Analysis) for correct pilot response to a system failure. A crew procedure analysis could be supported by performing qualitative evaluations that compare actual procedures to procedure design philosophies, by developing measures of procedure complexity, or by accomplishing other techniques that focus on procedure characteristics that impact the likelihood of crew errors. Simulation testing, including the use of untrained (in the new design) line pilots, can be helpful in demonstrating that the design is not prone to crew errors. Finally, evaluations by highly experienced training and test pilots can be a valuable means of gathering information on the susceptibility to crew errors.

• *Section 25.1321(a) [at amdt. 25–41]:*

* * * Each flight, navigation, and powerplant instrument for use by any pilot must be *plainly visible* to him from his station with the *minimum practicable deviation* from his normal position and line of vision when he is looking forward along the flight path.

Discussion: The applicant may wish to perform analyses of the visual angles to each of the identified instruments. Final assessments of the acceptability of the visibility of the instruments may require a simulator with a high degree of geometric fidelity and/or the airplane.

• *Section 25.1321(e) [at amdt. 25–41]:*

If a visual indicator is provided to indicate malfunction of an instrument, it must be *effective under all probable cockpit lighting conditions*.

Discussion: Demonstrations and tests intended to show that these indications of instrument malfunctions, along with other indications and alerts, are visible under the expected lighting conditions will typically employ the use of production quality hardware and careful control of lighting conditions (e.g., dark, bright forward field, shafting sunlight). Simulators and aircraft are often used, although supporting data from laboratory testing also may be useful.

• *Section 25.1523 [at amdt. 25–3]:*

The minimum flightcrew must be established so that it is sufficient for safe operation, considering:

(a) the *workload* on individual crewmembers;

(b) the *accessibility and ease of operation* of necessary controls by the appropriate crewmember; and

(c) the *kind of operation* authorized under § 25.1525.

Discussion: (The factors considered in making the determinations required by this section are set forth in Appendix D of this general statement of policy.) The applicant may choose to use workload analyses (such as time-line analysis) to evaluate certain workload issues. Other evaluations of workload typically involve trained pilots in either a high fidelity simulation or in actual airplanes. There are a number of possible workload assessment techniques that can be successfully employed. An efficient means for selecting test conditions is to focus on those operational and/or failure scenarios that are likely to result in the highest workload conditions. Dispatch under the Minimum Equipment List (MEL) also should be considered, in combination with other failures that are likely to result in significantly increased workload. Since no objective standard for workload is available, applicants may wish to compare the workload in the new/modified airplane with that in a well-understood, previously certificated airplane.

• *Section 25.1543(b) [at amdt. 25–72]:*

Each instrument marking must be *clearly visible* to the appropriate crewmember.

Discussion: The applicant may choose to use computer modeling to provide preliminary analysis showing that there are no visual obstructions between the pilot and the instrument markings. Where head movement is necessary, such analyses also can be used to measure its magnitude. Other analysis techniques can be used to establish appropriate font sizes, based on research-based requirements. Mock-ups also can be helpful in some cases. The data collected in these analysis and assessments can be used to support final verification in the flight deck, using subjects with vision that is representative of the pilot population, in representative lighting conditions.

2. Specific Human Factors Requirements

- *Section 25.785(g) [at amdt. 25–88]:*

Each seat at a flight deck station must have a restraint system . . . that permits the flight deck occupant, when seated with the restraint system fastened, *to perform all of the occupant's necessary flight deck functions.*

Discussion: The applicant may choose to develop a list of what it considers to be necessary flight deck functions, under normal and abnormal conditions. Methods similar to those used to show compliance with § 25.777 also may be appropriate for demonstrating compliance with this paragraph, with the additional consideration of movement constraints imposed by the full restraint system.

- *Section 25.785(l) [at amdt. 25–88]:*

The forward observer's seat must be shown to be *suitable* for use in conducting the necessary enroute inspections.

Discussion: The applicant may choose to develop a set of requirements (e.g., what must be seen and reached) based on the expected tasks to be performed by an inspector. Computer-based analysis and/or mock-ups can be used to develop supporting data; evaluation of enroute inspection scenarios can be used to verify that all required tasks can be performed. Since the geometric relationship between the observer's seat and the rest of the flight deck (including the pilots) is important, the evaluations often must occur in the actual airplane.

- *Section 25.1141(a) [at amdt. 25–72]:*

Each powerplant control must be located so that it *cannot be inadvertently operated* by persons entering, leaving, or moving normally in the cockpit.

Discussion: This type of assessment typically requires at least a physical mock-up, due to limitations in the ability to adequately model ''normal'' movement in the cockpit. Evaluations should be designed to include cases in which the pilots must reach across the area surrounding the powerplant controls and to look for places where pilots will naturally place their hands and feet during ingress and egress, and during cruise.

- *Section 25.1357(d) [original amdt.]:*

If the ability to reset a circuit breaker or replace a fuse is essential to safety during flight, that circuit breaker or fuse must be *located and identified* so that it can be *readily* reset or replaced in flight.

Discussion: The applicant may choose to use methods similar to those employed for § 25.777 to demonstrate the ability of the pilot to reach the specific circuit protective device(s). The applicant also should consider how to evaluate the ability of the pilot to readily identify the device(s), whether they are installed on a circuit breaker panel or controlled using an electronic device (i.e., display screen on which the circuit breaker status can be displayed and controlled).

- *Section 25.1381(a)(2) [at amdt. 25–72]:*

The instrument lights must be installed so that * * * (ii) *no objectionable reflections* are visible to the pilot.

Discussion: See the discussion of § 25.773(a), above.

3. Specific Crew Interface Requirements

- *Section 25.773(b)(2)(i) [at amdt. 25–72]:*

The first pilot must have a window that is *openable* * * * and gives sufficient protection from the elements *against impairment of the pilot's vision.*

Discussion: While the applicant may perform analyses to show that the visual field through the openable window, due to the nature of the task (landing the airplane by looking out the opened window), it is likely that a flight test would be the most appropriate method of compliance. Assessment of the forces required to open the window under flight conditions may also be needed.

- *Section 25.1322 [at amdt. 25–38]:*

If warning, caution, or advisory lights are installed in the cockpit, they must, unless otherwise approved by the Administrator, be:

(a) Red, for warning lights (lights indicating a hazard which may require immediate corrective action);

(b) Amber, for caution lights (lights indicating the possible need for future corrective action);

(c) Green for safe operation lights; and

(d) Any other color, including white, for lights not described in paragraphs (a) through (c) of this section, provided the color differs sufficiently from the colors prescribed in paragraphs (a) through (c) of this section to *avoid possible confusion.*

Discussion: Compliance with this requirement is typically shown by a description of each of the warning, caution, and advisory lights. Evaluations may also be useful to verify the chromaticity (e.g., red looks red, amber looks amber) and discriminability (i.e., colors can be distinguished reliably from each other) of the colors being used, under the expected lighting levels. These evaluations can be affected by the specific display technology being used, so final evaluation with flight quality hardware is sometimes needed. A description of a well-defined color coding philosophy that is consistently applied across flight deck systems can be used to show how the design avoids ''possible confusion.''

Appendix B—Related Documents

1. Williams, James H., ''Description of the FAA Avionics Certification Process,'' FAA Document, April 23, 1997

This document is a high level explanation of the FAA approach to certification of avionics. It addresses the major aspects of the certification process including:

- Design approvals under the Type Certificate (TC) or Supplemental Type Certificate (STC) approval process;
- Design approvals under the Technical Standard Order (TSO) approval process;
- Installation approvals for initial (new) avionics following a TSO approval;
- Installation approvals using the FAA Form 337 (''Major Repair and Alteration: Airframe, Powerplant, Propeller, or Appliance'') process.

This document will help the applicant become familiar with the FAA process to certify avionics. The certification process is laid out in a flowchart format. This document is available on the Internet at *http://www.faa.gov/avr/air/air100/100home.htm*.

2. FAA Booklet, ''The FAA Type Certification Process,'' Aircraft Certification Service, May 1996

The FAA's Aircraft Certification Service issued this document for both internal use and industry guidance. It describes the important steps in the process leading to issuance of a type certificate. Discussion includes descriptions of roles, responsibilities, and job functions of participants in the process, and provides a listing of the ''best practices'' that the FAA can follow to do its job well. It also describes the use of a Certification Plan as a key communication tool during the certification process.

3. FAA Order 8110.4A, ''Type Certification Process,'' March 2, 1995; and

4. FAA Order 8110.5, ''Aircraft Certification Directorate Procedures,'' October 1, 1982

These Orders prescribe the responsibilities and procedures for FAA aircraft certification engineering and manufacturing personnel when accomplishing the evaluation and approval of aircraft type design data and changes to approved type design data. These Orders contain descriptions of Certification Plans and how FAA personnel can use them during the certification process. These documents are can be found on the Internet at:

http://www.mmac.jccbi.gov/afs/afs600/fdr/8110–4a.pdf

and

http://av-info.faa.gov/dst/8100-5.doc

5. Advisory Circular (AC) 21–40, ''Application Guide for Obtaining a Supplemental Type Certificate,'' May 6, 1998

This advisory circular contains guidance for preparing a Certification Plan for a supplemental type certification project. Figure 2–4 of the AC suggests that applicants use a specific format for the plan and provides a sample of it, which includes the following nine sections:

1. Introduction

2. System description
3. Certification requirements
   (a) Regulations
   (b) Special requirements, unique or novel design aspects
   (c) Compliance checklist
4. Methods of compliance
5. Functional hazard assessment
6. Operational considerations (if required)
7. Certification documentation
8. Certification schedule
9. Use of designees and identification of individual Designated Engineering Representatives (DER)/Designated Airworthiness Representatives (DAR)

These sections, and the material they contain, are appropriate for any applicant's Certification Plan. They also could be applied to the development of a Human Factors Certification Plan. This document can be found on the Internet at *http://www.faa.gov/avr/air/acs/achome.htm*.

6. Society of Aeronautical Engineers (SAE) Aerospace Recommended Practice 4033, "Pilot-System Integration," August 1995

This document provides a concept development guide to the human engineering specialist and the aircraft systems designer for pilot-system integration that will enhance safety, productivity, reduce certification risk, and improve cost effectiveness. It addresses the resulting processes of system development including aspects of interface design and automation philosophy. (SAE publications are available from SAE, 400 Commonwealth Drive, Warrendale, PA 15096–0001; telephone (412) 776–4970; or e-mail at publications@sae.org.)

Appendix C—Sample Human Factors Certification Plan

This sample plan is intended to provide examples of the types of information that could be included in the various sections. Keep the following in mind while reviewing it:

- It is based on a totally hypothetical certification program, and no connection to any real system or certification program is intended or implied.
- There are placeholders where the drawings and other figures could be inserted.
- This sample plan should not be considered to be comprehensive. The examples are intended to be illustrative, but do not necessarily include all of the issues, even for the hypothetical program.
- The methods of compliance are intended to show the methods that a hypothetical applicant might have chosen for the project. It should not be construed as describing the acceptable list of methods for any real program. These would have to be discussed and agreed upon within the context of a specific program.
- The Deliverable Products column in the compliance matrix identifies what the hypothetical applicant will produce to substantiate compliance. The titles of reports represent examples of how an applicant might choose to package the information.
- Finally, the sample plan is not intended to specify the format of the report, but rather, to provide guidance on the structure and content only.

[Hypothetical]—Human Factors Certification Plan for the Electronic Approach Chart System (EACS)

1. Introduction

This project seeks a Supplemental Type Certificate for the installation of an Electronic Approach Chart System (EACS) in Guerin Model 522 airplanes. The intent of the EACS is to provide an alternative to the use of paper approach charts. The EACS will be installed so that it will be physically and functionally integrated into the flight deck. System data will be loaded using existing on-board data loading capabilities. The EACS will be certified as a non-essential system. This Human Factors Certification Plan identifies the human factors-related regulations and the methods of compliance that will be used to show that all safety-related human factors issues have been fully addressed.

2. System Description

a. *Intended Function:* The Electronic Approach Chart System uses a panel-mounted Active Matrix Liquid Crystal Display (AMLCD) to display approach charts for the pilots to use on the ground and in flight. The key functions include the following:

(1) During the preflight preparation:

(a) The pilot will use the system to call up and review the approach charts for the destination airport and selected alternates.

(b) The pilot will be able to ''mark'' the appropriate charts for quick retrieval later in the flight.

(c) If initiated by the pilot, the system will be able to query the Flight Management System (FMS) to pre-identify the appropriate charts, based on the flight plan.

(2) During flight (normal operations):

(a) The pilot will quickly access the preselected approach charts. Charts that were not preselected will also be accessible.

(b) The pilot will be able to manipulate the display of the chart to show only the information relative to the planned route of flight.

(c) The pilot will be able to select the appropriate approach parameters (transition, approach navigation aids, minimums, etc) using the EACS. Upon pilot initiation, the EACS will load these selections into the other systems on the airplane [e.g., approach navaids will be sent to the FMS for autotuning, decision height (DH) will be sent to altitude alerting system and display system]. For a complete list of EACS functions, see the EACS System Description Document.

(3) During flight (non-normal operations, i.e., requiring an emergency diversion): In addition to those functions available for normal operations, the EACS provides the following functionality to support emergency diversions.

(a) When the pilot selects the ALTERNATE AIRPORT function on the FMS, the FMS automatically identifies the five nearest airports that meet the landing requirements for the airplane. These airports will be automatically transmitted to the EACS, which will preselect them (mark them for quick retrieval).

(b) At the pilot's request, the EACS will display a listing of the diversion airports and allow the pilot to quickly review the approach charts and select the desired approach. As in normal operations, this selection will be automatically transmitted to the FMS and other using systems.

b. *Flight Deck Layout Drawings:*

(1) Figure 1 and Figure 2 are drawings showing the installation location for the EACS displays, on an angled panel just outboard of each pilot's main instrument panel and forward of the side console. [*Figures 1 and 2 would be shown here.*]

(2) Figure 3 is a drawing of the EACS display unit with integrated touch screen, function selection buttons, and brightness control. [*Figure 3 would be shown here.*]

(3) Display formats are still in development and will be provided according to the following schedule shown in Figure 4. [Schedule would be shown here.]

c. *Underlying Principles for Crew Procedures:*

(1) Normal operations: The procedures for certain consistent navigation functions are imbedded in the FMS software, which walks the pilot through all necessary preflight and descent preparation steps. This is accomplished using a sequence of prompts, followed by a message when all required steps are completed. Wherever use of the EACS is called for in these existing sequences of tasks, the FMS software will be modified to include the appropriate prompts. Other ad hoc uses for the EACS will be at the pilots' discretion, as is the case with the other navigation and flight planning functions within the FMS.

(2) Procedures for dealing with EACS and FMS failures: Any such procedures will be driven by the following operational principles:

(a) The number of procedures and the number of steps in the procedures should be minimized.

(b) All diagnosis of system problems are to be accomplished by the system (i.e., there will be no crew procedures for diagnosing problems).

(c) There will be no crew procedures that require the use of the EACS circuit breaker.

(d) The pilots will not be required to learn alternative modes of interaction (i.e., if the touch screen fails, the pilots will not interact via a keyboard).

(e) If the FMS fails, the EACS should continue to operate normally, except for those functions associated with EACS–FMS data sharing. This continued operation should not be dependent on a pilot procedure.

d. *User Pilot Description:* The initial certification of this system will be in a transport category airplane and is expected to be used in both Part 121 and Part 135 operations. As a result, this program assumes that the pilot will have only the experience and training required for Part 135 operations.

(1) It is assumed that, as minimum qualifications, the pilots are multi-engine, instrument rated, commercial pilots. Minimum expected flying hours: 500. No time in type is assumed (first exposure to EACS may be during transition training).

(2) It is assumed that the pilots will have knowledge of existing paper approach charts,

but no experience with electronic presentation of chart information.

(3) It is assumed that the pilots will receive sufficient information/training to allow them to operate the FMS. Additional information regarding the use of the EACS should be incorporated into the FMS training material.

(4) The system should be simple and intuitive to operate, so that the pilot can become proficient with either 30 minutes of computer-based training, or with written material plus 30 minutes of hands-on practice on the airplane (on the ground).

e. *Description of the Operating Environment for the Airplane:* The following is a partial description of the operating environment anticipated for the flight deck design:

(1) Expected operational rules under which the airplane will be operated: Part 121, Part 135.

(2) Air Traffic Control (ATC) environment: The system must be compatible with all currently planned FMS operations, including the following:

(a) Full area navigation (RNAV) capability,

(b) Required time of arrival (RTA),

(c) Required Navigation Performance (RNP), using GPS as the primary means of navigation.

(d) Aeronautical Telecommunications Network (ATN) Controller Pilot Datalink Communications.

(3) Airport types, conditions, facilities: The system shall support any airport types suitable for transport category airplanes.

(4) Geographic areas of operation and associated terrain and weather issues: The system should support the display of any special terrain feature currently available on paper charts. However, that information may be displayed in a different way, appropriate for the selected display device.

3. Compliance Matrix for Part 25 Regulations Related to Flightcrew Human Factors

Section [Amdt. Level]	General human factors (HF) requirements	Method(s) of compliance	Deliverable product
§ 25.771(a) [at amdt. 25–4]	Each pilot compartment and its equipment must allow the minimum flightcrew to perform their duties without unreasonable concentration or fatigue.	Analysis, Simulator test, Flight test.	Workload Certification Report.
§ 25.771(e) [at amdt. 25–4]	Vibration and noise characteristics cockpit equipment may not interfere with safe operation of the airplane.	Bench test	Test report.
§ 25.773(a)(1) [at amdt. 25–72].	Each pilot compartment must be arranged to give the pilots sufficiently extensive, clear, and undistorted view, to enable them to safely perform any maneuvers within the operating limitations of the airplane, including takeoff, approach, and landing.	Similarity	Vision Certification Report.
§ 25.773(a)(2) [at amdt. 25–72].	Each pilot compartment must be free of glare and reflections that could interfere with the normal duties of the minimum flightcrew.	Ground test	Lighting Certification Report.
§ 25.777(a) [at amdt. 25–46]	Each cockpit control must be located to provide convenient operation and to prevent confusion and inadvertent operation.	Simulator test, Flight test.	Flight Deck Anthropometry Certification Report.
§ 25.777(c) [at amdt. 25–46]	The controls must be located and arranged, with respect to the pilot's seats, so that there is full and unrestricted movement of each control without interference from the cockpit structure or the clothing of the minimum flightcrew when any member of this flightcrew, from 5′2″ to 6′3″ in height, is seated with the seat belt and shoulder harness fastened.	Ground test	Flight Deck Anthropometry Certification Report.
§ 25.1301(a) [original amdt.]]	Each item of installed equipment must be of a kind and design appropriate to its intended function.	System description Simulator demonstration Flight test	System Description Document. Demonstration Report. Flight Test Report.
§ 25.1309(b)(3) [at amdt. 25–41].	* * * Systems, controls, and associated monitoring and warning means must be designed to minimize crew errors that could create additional hazards.	Hazard assessment Simulator demonstration	Fault tree analyses. Demonstration Report.
§ 25.1321(a) [at amdt. 25–41].	* * * Each flight, navigation, and powerplant instrument for use by any pilot must be plainly visible to him from his station with the minimum practicable deviation from his normal position and line of vision when he is looking forward along the flight path.	System description Analysis. Flight test	Installation drawings. Vision Certification Report. Flight Test report.
§ 25.1321(e) [at amdt. 25–41].	If a visual indicator is provided to indicate malfunction of an instrument, it must be effective under all probable cockpit lighting conditions.	Similarity Ground test	System description and Statement of Similarity. Flight Test report.
§ 25.1523 [at amdt. 25–3]	The minimum flightcrew must be established so that it is sufficient for safe operation, considering: (a) the workload on individual crewmembers; (b) the accessibility and ease of operation of necessary controls by the appropriate crewmember; and (c) the kind of operation authorized under § 25.1525. The criteria used in making the determinations required by this section are set forth in Appendix D.	Simulator test Flight test	Demonstration report. Flight Test report.
§ 25.1543(b) [at amdt. 25–72].	Each instrument marking must be clearly visible to the appropriate crewmember.	Analysis Similator test	Vision certification report. Demonstration report.
SYSTEM-SPECIFIC HF REQUIREMENTS			
§ 25.1381(a)(2) [at amdt. 25–72].	The instrument lights must be installed so that (ii) no objectionable reflections are visible to the pilot.	Ground test	Flight Test report.

Section [Amdt. Level]	General human factors (HF) requirements	Method(s) of compliance	Deliverable product
SPECIFIC CREW INTERFACE REQUIREMENTS			
§ 25.773(b)(2)(i) [at amdt. 25–72].	The first pilot must have a window that is openable * * * and gives sufficient protection from the elements against impairment of the pilot's vision.	Ground test (to verify no interference with window opening).	Flight Test report.
§ 25.1322 [at amdt. 25–38] ..	If warning, caution, or advisory lights are installed in the cockpit, they must, unless otherwise approved by the Administrator, be— (a) Red, for warning lights (lights indicating a hazard which may require immediate corrective action); (b) Amber, for caution lights (lights indicating the possible need for future corrective action); (c) Green for safe operation lights; and (d) Any other color, including white, for lights not described in paragraphs (a) through (c) of this section, provided the color differs sufficiently from the colors prescribed in paragraphs (a) through (c) of this section to avoid possible confusion.	Similarity	System Description Document.

4. System Safety Assessments

Each Fault Tree that includes a pilot response to a failure condition will include an assessment in accordance with AC 25.1309. In addition, any specific design features intended to increase the likelihood of correct pilot response will be noted in the system safety assessment.

5. Operational Considerations

The EACS is intended to replace the routine use of paper charts during all expected operations. It should be noted that design of this system is predicated on the assumption that if the system experiences a total failure, the pilots will revert to the use of paper charts. Because of this and the need to minimize the training burden, basic flight operations for the airplane will be unaffected by the incorporation of this system (no change in airplane capability or interaction with the airspace). Changes in pilot activities will be restricted to the way in which approach chart information is selected, accessed, and viewed. The following documents are expected to be modified as a result of the incorporation of EACS:

- Master Minimum Equipment List (MMEL).
- Flightcrew Operating Manual (FCOM).
- Flightcrew Training Manual.

6. Certification Documentation

Several documents will be produced that are intended to summarize the certain major human factors certification topics:

a. *Workload-related issues [§ 25.771(a) and § 25.1523] will be covered in the Workload Certification Report.* This will contain procedure analysis, timeline analysis, Pilot Subjective Evaluation results, and an overall summary of the workload considerations, as described in 14 CFR part 25, Appendix D.

Note: Workload related data gathering during flight test is expected to be conducted concurrently with other scheduled flight tests (*i.e.,* no dedicated workload test flights).

b. *Internal and External Vision issues [§ 25.773(a)(1), § 25.1321(a), § 25.1543(b), § 25.785(l)] will be covered in the Vision Certification Report.* This report will contain internal and external vision analyses, and a summary of pilot assessments.

c. *Flight deck lighting issues [§ 25.773(a)(2), § 25.1321(e), § 25.1381(a)(2)] will be covered in the Lighting Certification Report.* This report will include the results of reflection measurements and pilot assessments from ground tests and flight tests.

d. *Issues associated with the physical arrangement of the flight deck with respect to pilot reach, clearance, and interference [§ 25.777(a) and (c)], will be covered in the Flight Deck Anthropometry Certification Report.*

Note: No computer modeling is planned. Testing will be done using human subjects with representative body dimensions.

e. *Other documentation cited in the compliance matrix* will be finalized as the testing plans develop. For most of the flight testing, during which human factors certification tests will be conducted concurrently with other planned testing, the human factors results will be documented in the overall test report.

7. Certification Schedule

The following schedule (Figure 5) indicates the approximate timing of the major human factors analysis/demonstration/test activities, planned updates to the Human Factors Certification Plan, and planned coordination meetings for the discussion of human factors certification issues. This schedule will be refined and adjusted as the certification program develops.

FIGURE 5.—FLIGHT CREW OPERATIONS CERTIFICATION SCHEDULE

[Start Date: 8/1/1999; End Date: 4/15/2000]

Milestone	1999		2000	
	Quarter 3	Quarter 4	Quarter 1	Quarter 2
Initial FAA Project Concept Discussion Meeting	6/1			
Certification Plan Submittals	8/1			
Initial FAA Project Familiarization—draft drawings, etc.	9/1			
FAA Simulator Demonstrations	9/15			
FAA Simulator Demonstrations		10/10		
FAA Procedures Simulator Demos		10/30		
Workload Compliance Demonstrations		11/15		
List of Dispatch Conditions and Might Failures		11/15		
Flight Test Program		12/15		
Certification Document Submittals			1/5	
Draft Crew Ops Cert Document			3/1	
Workload 8110 Cert Report				4/1
Final Crew Ops Cert. Document				4/15

8. Use of Designees and Identification of Individual DER/DAR

The applicant recommends that the majority of the findings of compliance be delegated to the pilot DER. Final assessment of compliance with § 25.1523 should include FAA participation in flight test involving specific high workload scenarios. The FAA should also participate in ground testing for display legibility.

Appendix D—Quick Reference Guide for Reviewing Human Factors Certification Plans

This form can be used when reviewing an applicant's Certification Plan.

	Yes	No	N/A
1. Introduction			
2. System description:			
a. Intended function from pilot's perspective			
b. Flight deck layout drawings			
c. Underlying principles for crew procedures			
d. Assumed pilot characteristics ..			
e. Description of the operating environment for the airplane			
3. Certification requirements:			
a. Regulations			
b. Special requirements, unique or novel design aspects			
c. Compliance checklist			
4. Methods of compliance			
5. System safety assessment			
6. Operational considerations			
7. Certification documentation			
8. Certification schedule			
9. Use of designees and identification of individual Designated Engineering Representative (DER)/Designated Airworthiness Representative (DAR).			

Issued in Renton, Washington, on September 29, 1999.

Vi L. Lipski,

Acting Manager, Transport Airplane Directorate, Aircraft Certification Service.

[FR Doc. 99–26047 Filed 10–5–99; 8:45 am]

BILLING CODE 4910–13–U

DEPARTMENT OF TRANSPORTATION

Federal Railroad Administration

[FRA Docket No. 87–2, Notice. No. 8]

RIN 2130–AB20

Automatic Train Control (ATC) and Advanced Civil Speed Enforcement System (ACSES); Northeast Corridor (NEC) Railroads

AGENCY: Federal Railroad Administration (FRA), Department of Transportation (DOT).

ACTION: Informational Notice—ACSES Requirements between New Haven, Connecticut and Boston, Massachusetts Postponed to March 21, 2000

SUMMARY: FRA postpones from October 1, 1999 to March 21, 2000, the date on which all trains operating on the Northeast Corridor between New Haven, Connecticut and Boston, Massachusetts (NEC—North End) must be equipped to respond to the new ACSES system.

DATES: This Informational Notice is relevant to the compliance responsibilities of affected Railroads as of October 1, 1999.

FOR FURTHER INFORMATION CONTACT: W.E. Goodman, Staff Director, Signal and Train Control Division, Office of Safety, Mail Stop 25, FRA, 400 Seventh Street, SW, Washington, DC 20590 ((202) 493–6325), Paul Weber, Railroad Safety Specialist, Signal and Train Control Division, Office of Safety, Mail Stop 25, FRA, 400 Seventh Street, SW, Washington, DC 20590 ((202) 493–6268), or Patricia V. Sun, Office of Chief Counsel, Mail Stop 10, FRA, 400 Seventh Street, SW, Washington, DC 20590 ((202) 493–6060).

SUPPLEMENTARY INFORMATION: On July 22, 1998, FRA published an Order of Particular Applicability (Order) (63 FR 39343), which set performance standards for cab signal/automatic train control and ACSES systems, increased certain maximum authorized train speeds, and contained safety requirements supporting improved rail service on the NEC. Among other requirements, the Order required all trains operating on track controlled by the National Railroad Passenger Corporation (Amtrak) on the NEC—North End to be controlled by locomotives equipped to respond to ACSES by October 1, 1999.

Although Amtrak has continued work on a major improvement project between New Haven and Boston to facilitate train service at speeds up to 150 miles per hour, and has taken delivery of prototype high-speed trains expected to qualify for operation through curves at higher levels of unbalance and at higher speeds than conventional trains, FRA's acceptance of Amtrak's final program and timetable, and of the results of pre-qualification and pre-service tests, will not occur by the Order's original compliance date of October 1, 1999.

Based on information from Amtrak, FRA is setting a new date for compliance with the Order. Trains operating on the NEC—North End will be required to respond to ACSES on and after March 21, 2000. FRA appreciates the cooperation of all parties on implementation of this important safety system and will publish further notice when all required approvals have been completed.

Issued in Washington, D.C. on September 30, 1999.

Jolene M. Molitoris,

Administrator.

[FR Doc. 99–26035 Filed 10–5–99; 8:45 am]

BILLING CODE 4910–06–P

DEPARTMENT OF TRANSPORTATION

National Highway Traffic Safety Administration

[Docket No. NHTSA–99–6270]

Notice of Public Meeting for Strategies To Address the Potential for Driver Distraction Due to Emerging Vehicle Technologies

AGENCY: National Highway Traffic Safety Administration (NHTSA), DOT.

ACTION: Notice of cancellation of public meeting.

SUMMARY: The meeting to discuss strategies for realizing the benefits of advanced driver assistance and information technologies without compromising safety announced October 1, 1999 (64 FR 53445), has been canceled.

FOR FURTHER INFORMATION CONTACT: Rita I. Gibbons, Staff Assistant, Research and Development (telephone: 202–366–4862; E-mail: Rgibbons@NHTSA.dot.gov).

Issued on: October 1, 1999.

Raymond P. Owings,

Associate Administrator for Research and Development.

[FR Doc. 99–26096 Filed 10–5–99; 8:45 am]

BILLING CODE 4910–59–M

DEPARTMENT OF THE TREASURY

[Treasury Order Number 103–01]

Delegation of Authority to the Under Secretary for Domestic Finance Resolution Funding Corporation Oversight Responsibilities

Dated: September 2, 1999.

By virtue of the authority vested in the Secretary of the Treasury, including the authority vested by 31 U.S.C. 321(b) and section 14(d) of Pub. L. No. 105–216, the Homeowners Protection Act of 1998 (the Act), it is hereby ordered as follows:

1. *Delegation of Authority.* I hereby delegate to the Under Secretary (Domestic Finance) the authority of the Secretary of the Treasury under section 14(d) of the Act to:

a. Have general oversight over the Resolution Funding Corporation as provided in section 21A(a)(6)(I) of the Federal Home Loan Bank Act (12 U.S.C. 144la(a)(6)(I)), except as may be prohibited by statute; and

b. Exercise the authority and duties of the former Thrift Depositor Protection Oversight Board under section 21B of the Federal Home Loan Bank Act (12 U.S.C. 1441b), except as may be prohibited by statute.

2. *Redelegation:* The authority delegated in this Order may be redelegated in writing by the Under Secretary.

3. *Ratification.* To the extent that any action heretofore taken consistent with this Order may require ratification, it is hereby approved and ratified.

4. *Cancellation.* Treasury Order 103–01, ''Delegation of Authority to the Under Secretary (Domestic Finance) to Serve as the Chairperson of the Thrift Depositor Protection Oversight Board,'' dated August 6, 1996, is superseded.

Lawrence H. Summers,

Secretary of the Treasury.

[FR Doc. 99–25939 Filed 10–5–99; 8:45 am]

BILLING CODE 4810–25–P

DEPARTMENT OF THE TREASURY

Bureau of the Public Debt

Proposed Collection: Comment Request

ACTION: Notice and request for comments.

SUMMARY: The Department of the Treasury, as part of its continuing effort to reduce paperwork and respondent burden, invites the general public and other Federal agencies to take this opportunity to comment on proposed and/or continuing information collections, as required by the Paperwork Reduction Act of 1995, Public Law 104–13 (44 U.S.C. 3506(c)(2)(A). Currently the Bureau of the Public Debt within the Department of the Treasury is soliciting comments concerning the Application For Refund Of Purchase Price Of United States Savings Bonds For Organizations.

DATES: Written comments should be received on or before December 7, 1999, to be assured of consideration.

ADDRESSES: Direct all written comments to Bureau of the Public Debt, Vicki S. Thorpe, 200 Third Street, Parkersburg, WV 26106–1328.

FOR FURTHER INFORMATION CONTACT: Requests for additional information or copies of the form and instructions should be directed to Vicki S. Thorpe, Bureau of the Public Debt, 200 Third Street, Parkersburg, WV 26106–1328, (304) 480–6553.

SUPPLEMENTARY INFORMATION:

Title: Application For Refund Of Purchase Price Of United States Savings Bonds For Organizations.

Form Number: PD F 5410.

Abstract: The information is requested to support refund of purchase price of savings bonds to an organization.

Current Actions: None.

Type of Review: New.

Affected Public: Business or other for-profit/not-for-profit institutions.

Estimated Number of Respondents: 5,000.

Estimated Time Per Respondent: 06 minutes.

Estimated Total Annual Burden Hours: 500.

Request for Comments

Comments submitted in response to this notice will be summarized and/or included in the request for OMB approval. All comments will become a matter of public record. Comments are invited on: (a) Whether the collection of information is necessary for the proper performance of the functions of the agency, including whether the information shall have practical utility; (b) the accuracy of the agency's estimate of the burden of the collection of information; (c) ways to enhance the quality, utility, and clarity of the information to be collected; (d) ways to minimize the burden of the collection of information on respondents, including through the use of automated collection techniques or other forms of information technology; and (e) estimates of capital or start-up costs and costs of operation, maintenance, and purchase of services to provide information.

Dated: September 30, 1999.

Vicki S. Thorpe,

Manager, Graphics, Printing and Records Branch.

[FR Doc. 99–25965 Filed 10–5–99; 8:45 am]

BILLING CODE 4810–39–P

UNITED STATES INFORMATION AGENCY

Culturally Significant Objects Imported for Exhibition Determination: ''Gold of the Nomads: Scythian Treasures From Ancient Ukraine''

AGENCY: United States Information Agency.

ACTION: Notice.

SUMMARY: Notice is hereby given of the following determinations: Pursuant to the authority vested in me by the Act of October 19, 1965 (79 Stat. 985, 22 U.S.C. 2459), Executive Order 12047 of March 27, 1978 (43 FR 13359, March 29, 1978), and Delegation Order No. 85–5 of June 27, 1985 (50 FR 27393, July 2, 1985), I hereby determine that two additional objects to be included in the exhibit, ''Gold of the Nomads: Scythian Treasures from Ancient Ukraine'' imported from abroad for the temporary exhibition without profit within the United States, are of cultural significance.[1] These objects are imported pursuant to a loan agreement with the foreign lender. I also determine that the exhibition or display of the listed objects at the San Antonio Museum of Art, San Antonio, TX, from on or about November 7, 1999, to on or about January 30, 2000, and The Walters Art Gallery in Baltimore, MD, from on or about March 5, 2000, to on or about May 28, 2000, and the Los Angeles County Museum of Art, Los Angeles, CA, from on or about July 2, 2000, to on or about September 24, 2000, and the Brooklyn Museum of Art, Brooklyn, NY, from on or about October 29, 2000, to on or about January 21, 2001, is in the national interest. Public Notice of these determinations is ordered to be published in the **Federal Register**.

FOR FURTHER INFORMATION CONTACT: For a copy of the list of exhibit objects and for further information, contact Mr. R. Wallace Stuart, Assistant Legal Advisor, L/PD, 202/619–5078. The address is Room 700, U.S. Information Agency, 301 4th Street, SW, Washington, DC 20547–0001.

[1] A notice concerning other objects in this exhibit was published in the Federal Register on August 25, 1999.

Dated: September 30, 1999.

Les Jin,

General Counsel.

[FR Doc. 99–26080 Filed 10–5–99; 8:45 am]

BILLING CODE 8230–01–M

federal register

Wednesday
October 6, 1999

Part II

Department of Labor

Employment and Training Administration

Workforce Investment Act; Proposed Unified Plan Guidance (Developed by the Departments of Labor, Education, Health and Human Services, Agriculture, and Housing and Urban Development); Proposed Information Collection Request Submitted for Public Comment and Recommendations; Notice

DEPARTMENT OF LABOR

Employment and Training Administration

[Billing Code: 4510–30–P]

Workforce Investment Act; Proposed Unified Plan Guidance (Developed by the Departments of Labor, Education, Health and Human Services, Agriculture, and Housing and Urban Development); Proposed Information Collection Request Submitted for Public Comment and Recommendations

ACTION: Notice.

SUMMARY: The Departments of Labor, Education, Health and Human Services, Agriculture, and Housing and Urban Development, as part of continuing efforts to reduce paperwork and respondent burden, conducts a preclearance consultation program to provide the general public and Federal agencies with an opportunity to comment on proposed and/or continuing collections of information in accordance with the Paperwork Reduction Act of 1995 (44 U.S.C. 3506(c)(2)(A)). This program helps to ensure that reporting burden (time and financial resources) is minimized; collection instruments are clearly understood; and the impact of collection requirements on respondents can be properly assessed. This notice by the Employment and Training Administration (on behalf of all the aforementioned agencies) is to solicit comments concerning proposed guidance for States to submit a Unified Plan under Section 501 of the Workforce Investment Act of 1998. A copy of this proposed guidance is provided at the end of this notice. The proposed guidance is published for the purpose of obtaining comment on its information collection requirements from the public.

DATES: Written comments must be submitted to the office listed in the addressee's section below on or before December 6, 1999.

ADDRESSES: Comments may be submitted to: Dolores Hall-Beran, Coordinator of the State Unified Plan Review Process, U.S. Department of Labor, 200 Constitution Avenue, NW, Room S–5513, Washington, D.C. 20210. The Coordinator can be reached by telephone at (202) 219–0316, ext. 146, or by e-mail at dberan@doleta.gov.

FOR FURTHER INFORMATION CONTACT: Mr. Eric Johnson, Workforce Investment Implementation Task Force Office, U.S. Department of Labor, 200 Constitution Ave, NW, Room S–5513, Washington, DC 20210, Telephone: (202) 219–0316 (voice) (This is not a toll-free number), or 1–800–326–2577 (TDD). Information may also be found at the website—http://usworkforce.org.

SUPPLEMENTARY INFORMATION:

I. Background

President Clinton signed the Workforce Investment Act of 1998 (WIA) and the Carl D. Perkins Vocational and Technical Education Act of 1998 (Perkins III) into law on August 7, 1998, and October 31, 1998, respectively. These Acts will have a major impact on the nation's education, training and workforce development systems. Successful implementation requires collaboration at the Federal, State, and local levels to ensure creation of a comprehensive, customer-focused workforce investment system as well as the creation of a seamless system of service delivery. The purpose of this proposed document is to provide guidance to facilitate States' development and submission of a State Unified Plan authorized by Title V, Section 501 of the Workforce Investment Act of 1998 (WIA). Please note that this document provides a model the State may choose to follow in developing its unified plan, but does not represent a required format for submission. For a more detailed description of the purpose and role of this proposed guidance, please see the copy of the proposed guidance published herein.

II. Review Focus

The Departments of Labor, Education, Health and Human Services, Agriculture, and Housing and Urban Development are particularly interested in comments which:

—Evaluate whether the proposed collection of information is necessary for the proper performance of the functions of the agencies, including whether the information will have practical utility;

—Evaluate the accuracy of the agencies estimate of the burden of the proposed collection of information, including the validity of the methodology and assumptions used;

—Enhance the quality, utility, and clarity of the information to be collected; and

—Minimize the burden of the collection of information on those who are to respond, including through the use of appropriate automated, electronic, mechanical, or other technological collection techniques or other forms of information technology, e.g., permitting electronic submission of responses; and

— Evaluate whether the proposed guidance will facilitate States' development of comprehensive unified plans.

III. Current Actions

This is a request for OMB approval (under the Paperwork Reduction Act of 1995 (44 U.S.C. 3506(c)(2)(A)) to approve a new collection of information.

Type of Review: New Collection.

Agency: Employment and Training Administration, on behalf of the Departments of Labor, Education, Health and Human Services, Agriculture, and Housing and Urban Development.

Title: Proposed State Unified Plan Planning Guidance for State Unified Plans Submitted Under Section 501 of the Workforce Investment Act of 1998.

Frequency: Annually.

Affected Public: Individuals; businesses; other for-profit/not-for-profit institutions; Federal, State, Local, or Tribal Governments.

Number of Respondents: 57.

Burden and Cost Estimates: Assuming a respondents opts to include all 16 programs in the Unified Plan, the following burden estimates would apply. [Note: Estimates were derived by analyzing the current burden estimates for current State plan requirements for the individual programs included in Section 501. Using burden estimated from each of the existing planning requirements, it takes an average of 84 minutes (or 1.4 hours) to complete each narrative question. There are approximately 230 narrative questions in the unified plan guidance. Using previous burden estimates as a guide, approximately 13 hours were allowed for the completion of the assurances and certifications. Finally, a $25 per hour rate was used for staff completing the State planning requirements.]

Estimated Time Per Response: 335 hours. [(1.4 hours * 230 narratives) + 13 hours].

Total Estimated Cost for Respondents: $477,375.

Total Burden Hours: 19,095 hours. [335 hours * 57 respondents] Comments submitted in response to this notice will be summarized and/or included in the request for Office of Management and Budget approval of the information collection request; they will also become a matter of public record.

Dated: September 29, 1999.

Raymond J. Uhalde,

Deputy Assistant Secretary, Employment and Training Administration.

BILLING CODE 4510–30–P

Proposed

State Unified Plan

Planning Guidance

for State Unified Plans

Submitted Under Section 501

of the

Workforce Investment Act of 1998

State/Commonwealth of

_____

for the period of

_____

BILLING CODE 4510–30–C

State Unified Plan Planning Guidance

A. Statement of Purpose

The purpose of this document is to provide guidance to States which submit a State Unified Plan authorized by Title V, Section 501 of the Workforce Investment Act of 1998 (WIA). The State Unified Plan Planning Guidance facilitates the development and submission of such a plan, which addresses two or more of the programs or activities specified at Section 501(b)(2). Please note that this document provides a model the State may choose to follow, but is not required to follow, in developing unified plans. However, following this model application will reduce burden on the State and ensure that the State has sufficiently met the information collection requirements in lieu of completing the individual program state planning requirements.[1]

B. Background

President Clinton signed the Workforce Investment Act of 1998 (WIA) and the Carl D. Perkins Vocational and Technical Education Act of 1998 (Perkins III) into law on August 7, 1998, and October 31, 1998, respectively. These Acts will have a major impact on the nation's education and workforce investment systems. Implementation requires collaboration at the Federal, State, and local levels to create a more comprehensive, customer-focused workforce investment system.

C. Section 501 Programs and Activities

Below is a listing of the programs and activities covered in Section 501 of WIA, along with the commonly used name. In this document, we generally refer to the activities and programs by their commonly used names. Should State staff need information on the programs listed, a staff contact is provided here also.

- Secondary Vocational Education Programs (Perkins III/Secondary)

Note that inclusion of this program in the unified plan requires prior approval of State legislature.

Administered by Department of Education, Office of Vocational and Adult Education.

Staff Contact: Jon Weintraub: 202–205–5602 (phone); 202–260–9183 (fax) (E-mail: jon__weintraub@ed.gov).

- Postsecondary Vocational Education Programs (Perkins III/Postsecondary)

Administered by Department of Education, Office of Vocational and Adult Education.

Staff Contact: Jon Weintraub: 202–205–5602 (phone); 202–260–9183 (fax) (E-mail: jon__weintraub@ed.gov).

- Tech-Prep Education (Title II of Perkins III)

Administered by Department of Education, Office of Vocational and Adult Education.

Staff Contact: Jon Weintraub: 202–205–5602 (phone); 202–260–9183 (fax) (E-mail: jon__weintraub@ed.gov).

- Activities Authorized Under Title I, Workforce Investment Systems (Employment and Training Activities for Adults, Dislocated Workers and Youth, or WIA Title I)

Administered by Department of Labor, Employment and Training Administration.

Staff Contact: Eric Johnson: 202–219–0316 (phone); 202–219–0323 (fax) (E-mail: ejohnson@doleta.gov).

- Activities Authorized Under Title II of WIA, Adult Education and Family Literacy (Adult Education and Family Literacy Programs)

Administered by Department of Education, Office of Vocational and Adult Education.

Staff Contact: Jon Weintraub: 202–205–5602 (phone); 202–205–260–9183 (fax) (E-mail: jon__weintraub@ed.gov).

- Food Stamp Employment and Training Program, or FSET

Administered by USDA, Food and Nutrition Service.

Staff Contact: Michael Atwell: 703–305–2449 #2062 (phone); 703–305–2486 (fax) (E-mail: Michael__Atwell@FNS.USDA.GOV).

- Work Programs Authorized Under § 6(o) of the Food Stamp Act of 1977 (Food Stamp Work Programs)

Administered by USDA, Food and Nutrition Service.

Staff Contact: Michael Atwell: 703–305–2449 (phone); 703–305–2486 (fax) (E-mail: Michael__Atwell@FNS.USDA.GOV).

- Activities Authorized Under Chapter 2 of Title II of the Trade Act of 1974 (Trade Act Programs)

Administered by Department of Labor, Employment and Training Administration.

Staff Contact: Curtis Kooser: 202–219–4845 (phone); 202–219–5753 (fax) (E-mail: ckooser@doleta.gov).

- Programs Authorized Under the Wagner-Peyser Act (Employment Service)

Administered by Department of Labor, Employment and Training Administration.

Staff Contact: Alison Pasternak: 202–219–9092 (phone); 202–219–6643 (fax) (E-mail: apasternak@doleta.gov).

- Programs Authorized Under Part B of Title I of the Rehabilitation Act of 1973, Other Than § 112 of Such Act (Vocational Rehabilitation)

Administered by Department of Education, Rehabilitation Services Administration.

Staff Contact: Jerry Abbott: 202–205–5443 (phone); 202–205–9340 (fax) (E-mail: jerry__abbott@ed.gov).

- Programs Authorized Under Chapters 41 and 42 of Title 38, U.S.C., and 20 CFR 1001 and 1005 (Veterans Programs, Including Veterans Employment, Disabled Veterans' Outreach Program, and Local Veterans' Employment Representative Program)

Administered by DOL, Veterans' Employment and Training Service.

Staff Contact: Effie Baldwin: 202–693–4742 (phone); 202–693–4755 (fax) (E-mail: Baldwin-Effie@dol.gov).

- Programs Authorized Under State Unemployment Compensation Laws (Unemployment Insurance)

Administered by Department of Labor, Employment and Training Administration.

Staff Contact: William Coyne: 202–219–5223 #142 (phone); 202–219–8506 (E-mail: wcoyne@doleta.gov).

- Programs Authorized Under Part A of Title IV of the Social Security Act (Temporary Assistance for Needy Families (TANF), and Welfare-to-Work (WtW))

TANF administered by Health and Human Services, Administration for Children and Families.

Staff Contact: Robert Shelbourne: 202–401–5150 (phone); 202–205–5887 (fax) (E-mail: rmshelbourne@acf.dhhs.gov).

WtW administered by Department of Labor, Employment and Training Administration.

Staff Contact: Stephanie Curtis: 202–219–0024 (phone); 202–219–0312 (fax) (E-mail: scurtis@doleta.gov).

[1] Please note that the Departments of Education and Labor may issue additional guidance to assist States in fulfilling the performance accountability requirements of for WIA Title I, the Adult Education and Family Literacy Act, and Perkins III, including, for example, the requirements to renegotiate performance levels at statutorily defined points in the 5-year unified plan cycle.

• Programs Authorized Under Title V of the Older Americans Act of 1965 (Senior Community Service Employment Program, or SCSEP)

Administered by Department of Labor, Employment and Training Administration.

Staff Contact: Robert Lunz: 202–219–8502 (phone); 202–219–6338 (fax) (E-mail: rlunz@doleta.gov).

• Training Activities Carried Out by the Department of Housing and Urban Development (Community Development Block Grants, or CDBG, and Public Housing Plans)

Staff Contact: Deborah Greenstein: 202–708–1520 #5923 (phone); 202–708–0573 (fax) (E-mail: Deborah__Greenstein@hud.gov).

• Programs Authorized Under the Community Services Block Grant Act (Community Services Block Grant, or CSBG)

Administered by Health and Human Services, Administration for Children and Families.

Staff Contact: Margaret Washnitzer: 202–401–2333 (phone); 202–401–5718 (fax) (E-mail: mwashnitzer@acf.dhhs.gov).

D. Questions and Answers

1. What Is a State Unified Plan?

One of the most innovative reforms introduced by WIA is the State unified plan, which creates a new opportunity to maximize joint planning and coordination among programs and activities. States have the option of submitting a single plan for up to 16 Federal education and training programs. This unified plan may include the programs and activities set forth in Title V of WIA at Section 501(b)(2). The Departments of Agriculture (USDA), Education (DEd), Health and Human Services (DHHS), Housing and Urban Development (HUD), and Labor (DOL) are responsible for administering these programs and activities.

The five titles of the Workforce Investment Act reform Federal employment, adult education, and vocational rehabilitation programs and create a new, comprehensive workforce development system which is customer focused. Some of WIA's key principles are streamlining services, empowering individuals, increased access, increased accountability, integrated and coordinated services, State and local flexibility, and improved youth programs. WIA helps Americans access the tools they need to manage their careers through information and high quality services, and helps U.S. companies find skilled workers. Title I authorizes a variety of employment and training programs superseding the Job Training Partnership Act; Title II contains the Adult Education and Family Literacy Act; Title III amends the Wagner-Peyser Act to require that Employment Service/Job Service activities become part of the ''One-Stop'' system and Title IV includes the Rehabilitation Act Amendments of 1998. Title V contains the authority for the State unified plan and other general provisions. States may also include Perkins III in a unified plan. Perkins III supports reforms and improvement activities in vocational and technical education to improve student achievement and preparation for postsecondary education, further learning, and careers.

2. What Is the Purpose of the State Unified Plan Option?

Building on the requirements in WIA Titles I and II that States develop five-year plans, this option encourages States toward program coordination through a unified planning process. A number of States across the country have been pioneers in coordinating the multitude of Federally-funded programs to maximize the resources available to their citizens. As reinvention efforts proceed in governmental organizations, creativity is needed at all levels—local, State, and Federal. In order to effectively implement WIA, a collaboration clearly focused on customer service, cutting red tape, and performance partnership must be built and maintained.

The Federal partners recognize that the development of State unified plans presents a unique challenge: while coordinating planning activities across department and agency lines, States are not relieved of meeting the Federal statutory requirements for each of the programs and activities they include in the unified plan. This planning guidance and the accompanying instructions were developed to enhance the quality of that planning process and make it less burdensome. We have attempted to reduce the burden by eliminating duplicative requirements and finding common elements among the planning guidance for each of the programs and activities included in Section 501. This document reflects the efforts of the Federal agencies to identify areas of overlap. States may use this guidance as an alternative to the individual plan guidance developed by Federal agencies for each of the Federal programs that may be included in a unified plan.

3. How Is This Guidance Related to State Planning Guidance Documents Which the Federal Agencies Have Already Published for the Programs and Activities Listed Above?

The Departments of Agriculture, Education, Health and Human Services, Housing and Urban Development, and Labor, and the Office of Management and Budget, jointly developed this planning document. For States submitting a unified plan, this document is an alternative to previously issued planning guidance for programs and activities included in the plan. Please note that this document provides a model the State may choose to follow, but is not required to follow, in developing unified plans. However, following this model application will reduce burden on the State and ensure that the State has sufficiently met the information collection requirements in lieu of completing the individual program State planning requirements.

Materials related to funding, such as jointly executed funding instruments, grant agreements, or Governor/Secretary Agreements, items such as negotiated corrective action plans and program specific amendments are not considered planning materials for purposes of WIA § 501(c)(2). WIA's State unified plan provisions do not allow any specific statutory requirements to be superseded. For example, if a program has a statutory requirement for an annual plan, inclusion in a unified plan would not change that program's plan to a five-year plan nor would inclusion in the unified plan change the requirement to negotiate new performance levels and amend the unified plan to reflect these as required by such programs as Perkins III, AEFLA, and Title I of WIA.

This document also provides the ''Unified Planning Guidance'' cited in DOL's State Planning Guidance for submission of the strategic five-year State plan for Title I of WIA and the Wagner-Peyser Act under option four. Section 661.240 of WIA interim final regulations, published on April 15, 1999, addresses the State unified plan provisions as they apply to DOL programs. This document does not address any requirements for submission of a Workforce Flexibility plan provided under section 192 of WIA or for submission of a General Waiver Plan under WIA § 189(i). These waiver plans are not considered planning materials for purposes of WIA § 501(c)(2).

4. What Is Planning in the State Unified Plan Context?

Submission of a unified plan signals the State's determination to use Federal resources efficiently by looking across programs to identify coordination opportunities. For instance, given a mix of performance measures and programs, the State would decide what resources from each program can best respond to a given performance measure.

The unified planning process also balances the desire for States to achieve WIA's strategic planning objectives with the need to demonstrate compliance with the statutory and regulatory requirements for each of the programs in the unified plan. The Federal partners recognize that joint planning is a time-consuming and difficult endeavor. The unified plan option may accrue several benefits to States:

- *Improved customer service,* based on a holistic approach to serving customers which facilitates non-duplication of services and reaches new client groups
- *Improved strategic planning,* reflecting the sharing of knowledge at the State level concerning a wide range of programs and resources
- *Increased computer and information technology (IT) system networking,* providing the opportunity to learn about other and new IT systems and to promote the integrated use of technology
- *Burden reduction,* achieved through non-duplication of efforts and the need for less paper as opportunities for boilerplate language and certifications are identified
- *Increased coordination at the local level,* as the State fosters seamless services, through the coordination of education, training and employment resources and the provision of critical ancillary services
- *Improved use of State and Federal resources,* leading to greater effectiveness and efficiency

5. What Is a Consolidated Education Plan?

Another significant Federal initiative which encourages States toward integrated planning is the Department of Education's option for Consolidated Education Plans. Section 14302 of the Elementary and Secondary Education Act (ESEA), as reauthorized by Title I of the Improving America's Schools Act, allows State Education Agencies (SEAs) to apply for funding for Perkins III and a number of Federal elementary and secondary education formula grant programs through a single, simplified consolidated plan, rather than through separate funding applications or plans. An SEA may consolidate administrative funds under the specified programs, but may not commingle program funds. States that are interested in pursuing the option of submitting a consolidated plan for Perkins III funding should contact the Division for Vocational and Technical Education at the U.S. Department of Education.

6. What Does WIA Require for the State Unified Plan?

Programs Included: According to Title V of WIA, the State may develop and submit a State unified plan for two or more of the activities and programs listed at Section 501. Your State unified plan must include at least one program from (a) through (d). These programs are listed below.

Section 501(b)(1) requires all State unified plans to cover one or more of the following programs and activities:

(a) Perkins III/Secondary (**Note:** secondary vocational education programs may only be included with prior approval of the State legislature.)

(b) Perkins III/Postsecondary (**Note:** for the purposes of what the State unified plans cover, Perkins III/Secondary and Perkins III/Postsecondary count as one program.)

(c) Employment and Training Activities for Adults, Dislocated Workers and Youth, or WIA Title I and Wagner-Peyser Act. (**Note:** if the unified plan covers programs authorized under WIA Title I, then it must also cover programs authorized under the Wagner-Peyser Act.)

(d) Adult Education and Family Literacy Programs.

The State unified plan may cover one or more of the following activities:

(e) Food Stamp Employment & Training Program (FSET)
(f) Work programs authorized under § 6(o) of the Food Stamp Act of 1977
(g) Trade Act Programs
(h) Vocational Rehabilitation
(i) Veterans Programs, including Veterans Employment, Disabled Veterans' Outreach Program, and Local Veterans' Employment Representative Program
(j) Unemployment Insurance
(k) Temporary Assistance for Needy Families (TANF)
(l) Welfare-to-Work
(m) Senior Community Service Employment Program (SCSEP)
(n) Training activities carried out by the Department of Housing and Urban Development (Note: Programs for CDBG and Public Housing can only be included in your State unified plan if the State is the funds recipient.)
(o) Community Services Block Grant (CSBG)

In addition, you may submit your application for funding under the Tech-Prep program authorized by Title II of Perkins III as part of the unified plan.

Coordination: A State unified plan must include: (1) a description of the methods used for joint planning and coordination of the programs and activities included in the unified plan, and (2) an assurance that the methods included an opportunity for the entities responsible for planning or administering such programs and activities to review and comment on all portions of the unified plan.

Jurisdiction: The appropriate Secretary has the authority to approve the portion of the State unified plan relating to the activity or program over which the appropriate Secretary exercises administrative authority. Once the appropriate Secretary approves the portion of the plan relating to the activity or program, that portion shall be implemented by the State under the applicable portion of the State unified plan. A State that submits a unified plan covering an activity or program that is approved is not required to submit any other plan or application as a condition to receive funds under that Federal statute. However, as noted above, inclusion of a particular program in the State unified plan does not remove the statutory requirement for certain programs, such as Perkins III, to amend a plan to reflect newly negotiated performances levels.

Approval by the Appropriate Secretaries: (The term ''appropriate Secretary'' means the head of the Federal agency who exercises administrative authority over an activity or program.)

In General: A portion of the State unified plan covering an activity or program described in Section 501 that is submitted to the appropriate Secretary under this section is considered to be approved by the appropriate Secretary at the end of the 90-day period beginning on the day the appropriate Secretary receives the portion, unless the Secretary makes a written determination, during the 90-day period that: (1) The portion is not consistent with the requirements of the Federal statute authorizing the activity or program including the criteria for approval of a plan or application, if any, under such statute, or (2) The plan is not consistent with the coordination requirements listed above regarding joint planning and the opportunity for each entity to review and comment on all portions of the unified plan.

Criteria for approval of the State unified plan, relating to activities carried out under title I or II of WIA or

under the Carl D. Perkins Vocational and Technical Education Act, includes a requirement for agreement between the State and the appropriate Secretary regarding State performance measures, including levels of performance.

7. How Can Local Input Improve the Unified Planning Process?

While WIA only requires the involvement of State Board and Local Boards in the planning and coordination of the programs and activities authorized under Title I, the intent of the unified plan approach is to enable all the relevant parties in an area, if they so choose, to come together more readily to coordinate their activities in the best interests of the population to be served. However if coordination is achieved, nothing in the unified plan or in WIA itself permits a Board or any other entity to alter the decisions made by another program grantee in accord with that grantee's statutes.

Local stakeholders can play an important role in informing the State unified planning process, customizing the system to respond to local labor market needs. Chief elected officials, local boards, local education agencies, institutions of higher education, the business community, community-based organizations, representatives of special populations, service providers, and other stakeholders can assist State planners in identifying needs, objectives and appropriate collaborative strategies for attaining them. Consulting these stakeholders during the development of the unified plan would help ensure that the State's plan is broad enough to encompass different State and local approaches, yet specific enough to reflect local visions, needs, and economic development strategies.

E. Submission Options for State Unified Plans

1. Submission of the Unified Plan

States have the option of submitting a unified plan under Section 501 of the Workforce Investment Act of 1998 either in an electronic or hard-copy format. Incorporated in these options are new options for States to submit their unified plan to a single contact point. Several submission options are discussed in this notice. We strongly urge each State to submit its unified plan in electronic format so as to reduce burden and to ensure the timely receipt and review of the plan by the Federal agencies whose programs are included in the plan.

2. Submission Options

We are offering States four streamlined options for submitting their unified plans; three for electronic submission and one for hard-copy submission. These options are in addition to the option for a State to submit a hard copy of the unified plan to each Federal agency whose programs are included in the unified plan.

(a) Electronic Submission Options

A State can submit its unified plan electronically either by: (1) Posting it on an Internet web site which then can be accessed by the Federal agencies whose programs are included in the unified plan; (2) transmitting it by electronic mail to the Department of Labor, which, as the State Unified Plan Review Process Coordinator (Coordinator), will be responsible for distributing the electronic plan to each Federal agency affected; or (3) transmitting it by electronic mail directly to the Federal Departments whose programs are included in the plan. Information regarding the use of each of these three electronic options is provided in this notice.

(b) Streamlined Paper Submission Option

A State can choose to submit its unified plan in hard-copy by mailing one copy to the Coordinator, rather than mailing one copy to each program(s) included in the unified plan.

3. Processes for Electronic Submission

If a State chooses to submit its unified plan by transmitting documents via electronic mail, we request that the submission be in either WordPerfect or Microsoft Word (PC format, or an ASCII text file) to accommodate the technological capabilities of the various Federal agencies that will be recipients of the unified plan. If a State chooses to use a software program other than WordPerfect or Microsoft Word for the entire unified plan or for portions of the unified plan, it will be necessary for the State to submit those components of the unified plan in hard-copy using the instructions provided later in this notice for hard-copy submissions. In this instance, the agency's 90-day period for the review of the plan will not start until all components of the plan have been integrated and received by the affected Federal agencies.

We believe that each of the options for electronic submission will significantly reduce the burden on the States and ensure the timely start of the plan review and approval process. State plan certifications with electronic signatures will be acceptable. If a State does not have the capacity to produce electronic signatures, then the signature page must be submitted in hard-copy. Information on where to submit the signature page can be found in the section of this notice that describes the option for the submission of plans in a hard-copy format. The Office of Management and Budget or individual agencies may issue additional guidance concerning the acceptable format and mode of transmission for electronic signatures.

We encourage each State to include a table of contents at the beginning of its State unified plan so as to facilitate access to its various components. Within 48 hours of the receipt of the plan on a work day the Coordinator will confirm to the State receipt of the unified plan and indicate the date for the start of the 90-day review period. The electronic mail address for the Coordinator (Dolores H. Beran) is dberan@doleta.gov. The Coordinator may be contacted by phone at 202-219–0316, ext 146.

Electronic Option 1: Posting Plans on an Internet Web Site

We believe that this approach offers the best opportunity to dramatically reduce both process and paperwork burden on the States and to ensure the timely review of the unified plan. Under this option, a State need only post its unified plan on an Internet web site; inform, through electronic mail, the Coordinator of the documents location on the web site; provide contact information in the event of problems with accessing the web site; and certify that no changes will be made to the version of the plan posted on the web site after it is submitted, unless the changes have been approved by the reviewing agency. It is the responsibility of the designated agency to circulate the modifications among the other agencies that may be affected by the changes. The Coordinator will provide the web site location information to all the other Federal agencies whose programs are included in the unified plan so that they can access the unified plan for review.

Electronic Option 2: Submitting Plans to the Coordinator of the State Unified Plan Review Process

A second option is to send the entire unified plan by electronic mail directly to the Coordinator, who will ensure that the other Federal agencies whose programs are included in the unified plan receive the electronic version of the unified plan. Again, this approach will significantly reduce burden on the States and contribute to the timely start of the 90-day period for the review of the unified plan.

Electronic Option 3: Submitting Plans to the Federal Agencies Whose Programs Are Included in the Plan

A third option is for a State to submit its unified plan by electronic mail directly to each Federal Department whose programs are included in the unified plan. To reduce burden on the States, the unified plan need be sent only to the designated Federal Departmental State Unified Plan Contact (hereafter, Departmental Contact). The Departmental Contact will be responsible for ensuring that affected agencies and appropriate Regional Offices in that Department receive electronic versions of the unified plan. For example, if a unified plan contains plans for both the Vocational Rehabilitation and the Postsecondary Vocational Education programs, both of which are administered by different agencies within the United States Department of Education, the State need only submit the plan to the US Department of Education once. Electronic mail addresses for the Departmental Contacts are as follows:

Department of Labor: dberan@doleta.gov
Department of Education: Jerry__Abbott@ed.gov
Department of Health and Human Services: rmshelbourne@acf.dhhs.gov
Department of Agriculture: Michael__Atwell@fns.usda.gov
Department of Housing and Urban Development: Deborah__Greenstein@hud.gov

Within 24 hours of notification of receipt of the plan by all of the affected Federal agencies, the Coordinator will notify the State and the agencies to the start of the 90-day period for the review of the unified plan.

4. Hard Copy Submission

If a State is unable or chooses not to submit its unified plan electronically, the State can submit one copy of the unified plan to the Coordinator or submit the unified plan in the traditional manner separately to the designated contact for each activity or program included in the unified plan. We encourage States to submit unbound plans so as to facilitate their duplication.

Submitting the plan in hard-copy to the Coordinator rather than to each activity or program included will entail additional steps before the affected Federal agencies whose programs are included in the unified plan receive the unified plan for review. These additional steps could delay the start of an agency's 90-day period for the review of the unified plan. Based on our experiences to date with respect to unified plans submitted in hard-copy, a State can anticipate a delay of up to 7 to 10 working days in the start of the 90-day review period so as to accommodate the receipt, cataloging, duplication and distribution of the unified plan to the affected Federal agencies, some of which review the plan in the Regional Offices. Each State is thus encouraged to submit its unified plans in an electronic format to facilitate timely reviews.

For States that choose to submit a hard copy to the Coordinator, the Coordinator will notify the State within 10 working days of receipt of the unified plan as to the start of the 90-day period for the review of the unified plan. The mailing address for the Coordinator is: Dolores Beran, Coordinator of the State Unified Plan Review Process, United States Department of Labor, 200 Constitution Avenue, NW, Room S–5513, Washington, DC 20210. The Coordinator can be reached by telephone at (202) 219–0316, ext. 146, or by e-mail at dberan@doleta.gov.

F. How To Use ''Attachment A: Instructions''

1. Forms for State Use

At the beginning of Attachment A: Instructions, you will find four forms for use in submitting your State Unified Plan. These forms are available for electronic download, along with this entire guidance, at http://www.usworkforce.org.

- Unified Plan Activities and Programs Checklist: Please provide a list of the section 501 programs and activities you have included in your Plan. Use of this specific format is optional.
- Contact Information: Please provide the contact information requested for each of the section 501 programs and activities that you have included in your plan. Programs and activities may be combined on one form if they have the same contact information. Use of this specific format is optional.
- Plan Signature(s): Please provide the required signatures as appropriate for the programs and activities you have included in your State Unified Plan. Use of this specific format is optional, but the wording on your signature page must be identical to that provided here.

2. Program Descriptions

Please respond fully to the general questions in the program descriptions section, as well as the additional questions that relate to the programs and activities that are included in your State's unified plan.

3. Certifications and Assurances

By signing the signature page(s), you are assuring or certifying those items in the Certifications and Assurances section that apply to the programs and activities you have included in your State's unified plan.

G. Modifications

Plan modifications must be submitted to the appropriate Federal agency, in accordance with the procedures of the affected agency. It is the responsibility of the designated agency to circulate the modifications among the other agencies that may be affected by the changes. As noted above, inclusion of a particular program in the State unified plan does not remove the statutory requirement for certain programs to annually review the plan and submit amendments as needed or to amend a State plan to reflect newly negotiated performance levels.

H. Inquiries

General inquiries about the State unified plan process may be directed to the Coordinator of the State Unified Plan Review Process. The electronic mail address for the Coordinator (Dolores H. Beran) is dberan@doleta.gov. The Coordinator may be contacted by phone at 202–219–0316, ext 146. Inquiries related to specific activities and programs can be directed to the staff contacts listed above Question 3.

I. Submission Date

States may submit unified plans at any time up until April 1, 2000.[2]

J. Timing of Plan Approval

Section 501(d)(2) of WIA states that a portion of a State unified plan covering an activity or program is to be considered to be approved by the appropriate Secretary at the end of the 90-day period beginning on the day the appropriate Secretary receives the portion unless the appropriate Secretary makes a written determination, during the 90-day period, that the portion is not consistent with the requirements of the Federal statute authorizing the activity or program or section 501(c)(3) of WIA. Written determinations would include, for example, a written request from a representative of that agency for more information or documentation related to the requirements of WIA or the particular activity or program.

[2] Please note that for programs administered by OVAE, the unified plan will not go into effect for any particular program until a new grant is awarded under that program.

Attachment A

A. Unified Plan Activities and Programs Checklist

Under Section 501 of the Workforce Investment Act, the following activities or programs may be included in a State's unified plan. From the list below, please place a check beside the programs and activities your State or Commonwealth is including in this Unified Plan.

The State unified plan shall cover one or more of the following programs and activities:

____Secondary vocational education programs (Perkins III/Secondary)
Note that inclusion of this program requires prior approval of State legislature.
(Carl D. Perkins Vocational and Technical Education Act of 1998 (20 U.S.C. 2301 *et seq.*))
____Postsecondary vocational education programs (Perkins III/Postsecondary)
Note that for the purposes of what the State unified plan shall cover, Perkins III/Secondary and Perkins III/Postsecondary count as one program.
(Carl D. Perkins Vocational and Technical Education Act of 1998 (20 U.S.C. 2301 *et seq.*))
____Activities authorized under Title I, Workforce Investment Systems (Employment and Training Activities for Adults, Dislocated Workers and Youth, or WIA Title I, including the Wagner-Peyser Plan)
(Workforce Investment Act of 1998 (29 U.S.C. 2801 *et seq.*))
____Activities authorized under Title II, Adult Education and Family Literacy (Adult Education and Family Literacy Programs)
(Workforce Investment Act of 1998 (20 U.S.C. 9201 *et seq.*))

The State unified plan may cover one or more of the following programs and activities:

____Programs authorized under § 6(d) of the Food Stamp Act of 1977 (Food Stamp Employment and Training Program, or FSET)
(7 U.S.C. 2015(d))
____Food Stamp Employment and Training Program, or FSET
(7 U.S.C. 2015(o))
____Activities authorized under chapter 2 of title II of the Trade Act of 1974 (Trade Act Programs)
(19 U.S.C. 2271 *et seq.*)
____Programs authorized under Part B of title I of the Rehabilitation Act of 1973 (29 U.S.C. 720 *et seq.*), other than § 112 of such Act (29 U.S.C. 732) (Vocational Rehabilitation)
____ Activities authorized under chapters 41 & 42 of Title 38, USC, and 20 CFR 1001 and 1005 (Veterans Programs, including Veterans Employment, Disabled Veterans' Outreach Program, and Local Veterans' Employment Representative Program)
____ Programs authorized under State unemployment compensation laws (Unemployment Insurance)
(in accordance with applicable Federal law which is authorized under Title III, Title IX and Title XII of the Social Security Act and the Federal Unemployment Tax Act)
Programs authorized under part A of title IV of the Social Security Act (Temporary Assistance for Needy Families (TANF) and Welfare-to-Work (WtW))
(42 U.S.C. 601 *et seq.*)
____ Temporary Assistance for Needy Families
____ Welfare-to-Work
____ Programs authorized under title V of the Older Americans Act of 1965 (Senior Community Service Employment Program (SCSEP))
(42 U.S.C. 3056 *et seq.*)
____ Training activities carried out by the Department of Housing and Urban Development (Community Development Block Grants (CDBG) and Public Housing)
Note that programs for CDBG and Public Housing can only be included in your State unified plan if the State is the funds recipient.
____ Community Development Block Grants
____ Public Housing
____ Programs authorized under the Community Services Block Grant Act (Community Services Block Grant, or CSBG)
(42 U.S.C. 9901 *et seq.*)

B. Contact Information

Please complete one copy for EACH of the separate activities and programs included in your State unified plan.

Program:

_____

State Name for Program/Activity:

_____

Name of Grant Recipient Agency for Program/Activity:

_____

Address:

_____

Telephone Number: _____
Facsimile Number: _____
E-mail Address: _____

Name of State Administrative Agency (if different from the Grant Recipient):

_____

Address:

_____

Telephone Number: _____
Facsimile Number: _____
E-mail Address: _____

Name of Signatory Official:

_____

Address:

_____

Telephone Number: _____
Facsimile Number: _____
E-mail Address: _____

Name of Liaison:

_____

Address:

_____

Telephone Number: _____
Facsimile Number: _____
E-mail Address: _____

C. Plan Signature(s)

Governor (If Applicable)

As the Governor, I certify that for the State/Commonwealth of _____, for those activities and programs included in this plan that are under my jurisdiction, the agencies and officials designated above under ''Contact Information'' have been duly designated to represent the State/Commonwealth in the capacities indicated for the programs and activities indicated. Subsequent changes in the designation of officials will be provided to the designated program or activity contact as such changes occur.

I further certify that, for those activities and programs included in this plan that are under my jurisdiction, we will operate the workforce development programs included in this Unified Plan in accordance with this Unified Plan and the assurances described in Section III of this Unified Plan.

_____

Typed Name and Signature of Governor
Date

Responsible State Official for Eligible Agency for Vocational Education (If Applicable)

I certify that for the State/Commonwealth of _____, for those activities and programs included in this plan that are under my jurisdiction, the agencies and officials designated above under ''Contact Information'' have been duly designated to represent the State/Commonwealth in the capacities indicated for the programs and activities indicated. Subsequent changes in the designation of officials will be provided to the designated program or activity contact as such changes occur.

I further certify that, for those activities and programs included in this plan that are under my jurisdiction, we will operate the programs included in this Unified Plan in accordance with this Unified Plan and the applicable

assurances described in Section III of this Unified Plan.

_____
Typed Name, Title, and Agency of Responsible State Official for Vocational Education

_____
Signature Date

Responsible State Official for Eligible Agency for Vocational Rehabilitation (If Applicable)

I certify that for the State/Commonwealth of _____, for those activities and programs included in this plan that are under my jurisdiction, the agencies and officials designated above under ''Contact Information'' have been duly designated to represent the State/Commonwealth in the capacities indicated for the programs and activities indicated. Subsequent changes in the designation of officials will be provided to the designated program or activity contact as such changes occur.

I further certify that we will operate those activities and programs included in this Unified Plan that are under my jurisdiction in accordance with this Unified Plan and the assurances described in Section III of this Unified Plan.

_____
Typed Name, Title, and Agency of Responsible State Official for Vocational Rehabilitation

_____
Signature Date

Responsible State Official for Eligible Agency for Adult Education (If Applicable)

I certify that for the State/Commonwealth of _____, for those activities and programs included in this plan that are under my jurisdiction, the agencies and officials designated above under ''Contact Information'' have been duly designated to represent the State/Commonwealth in the capacities indicated for the programs and activities indicated. Subsequent changes in the designation of officials will be provided to the designated program or activity contact as such changes occur.

I further certify that, for those activities and programs included in this plan that are under my jurisdiction, we will operate the programs included in this Unified Plan in accordance with this Unified Plan and the applicable assurances described in Section III of this Unified Plan.

_____
Typed Name, Title, and Agency of Responsible State Official for Adult Education

_____
Signature Date

II. Unified Planning Instructions and Questions

Note: *The statutes cited in parentheses refer to the authorizing legislation for each respective program. This unified planning guidance only relates to planning requirements; it does not affect the statutory and regulatory requirements relating to other aspects of programs included in the plan.*

A. Vision and Goals

1. Provide the State's comprehensive vision of a workforce investment system, including broad economic, education, training, workforce development and related goals. Describe any challenges to achieving your vision, including any economic development, legislative or reorganization initiatives anticipated that could impact on the performance and effectiveness of your State's workforce investment system. Describe how each of the programs included in the plan will contribute to achieving these goals.

In answering the above question, if your unified plan includes:

(a) Vocational Rehabilitation:

(i) In accordance with sections 101(a)(15)(C) and (D), identify the goals and priorities of the State in carrying out the program and identify the strategies to address the State's needs and achieve the State's goals and priorities (Sec. 101 (a)(15)(C) and (D));

(ii) Sspecify the goals and plans of the State with respect to the distribution of funds received under section 622 (§ 625(b)(3)).

(b) Unemployment Insurance, provide a concise summary of the SESA's key direction and strategies for the plan, identifying the goal/main objective of each focus area.

B. One-Stop Delivery System

1. Describe the State's comprehensive vision of an integrated service delivery system, including the role each program incorporated in the unified plan, in delivery services through that system.

In answering this question, if your unified plan includes:

(a) WIA Title I and Wagner-Peyser Act and/or Veterans Programs:

(i) Describe major State policies and requirements that have been established to direct and support the development of a statewide workforce investment system not described elsewhere in this Plan. These policies may include, but are not limited to:

- State guidelines for the selection of One-Stop operators by local Boards
- The State's process to work with local boards and local Chief Elected Officials to certify existing One-Stop operators
- Procedures to resolve impasse situations at the local level in developing MOUs to ensure full participation of all required partners in the One-Stop delivery system

(ii) Describe the existing local One-Stop delivery systems and how the services provided by each of the required and optional One-Stop partners will be coordinated and made available through the One-Stop system. Be sure to address statewide requirements, how technical assistance will be provided, and availability of state funding for One-Stop development. (§ 112(b)(14))

C. Plan Development and Implementation

1. Describe the methods used for joint planning and coordination of the programs and activities included in the unified plan. (WIA § 501(c)(3)(A))

State Consultation with Locals in Development of Plan: The authorizing statutes for many of the programs that may be included in a unified plan require that the State plan be developed in consultation with various public and private entities, as well as members of the general public. Some statutes also require formal public hearings. Depending upon the programs that a State chooses to include in its unified plan, it may be possible for the State to satisfy many of these consultation requirements through a single set of processes. For example, both WIA Title I and Perkins III require that the business community be involved in the development of the State plans for these programs. The State may satisfy both of these requirements by involving the business community in the development of a unified plan that includes the two programs. Separate consultations are not necessary.

2. Describe the process used by the State to provide an opportunity for public comment and participation for each of the programs covered in the unified plan.

In addition, if your unified plan includes:

(a) Perkins III, you must hold public hearings and include a summary of the recommendations made by all segments of the public and interested organizations and groups and the eligible agency's response to the recommendations in the State plan. (§ 122(a)(3))

(b) WIA Title I and Wagner-Peyser Act and/or Veterans Programs, describe the process used by the State, consistent with section 111(g) of WIA, to provide an opportunity for public comment, including comment by representatives of business and representatives of labor organizations, and input into

development of the plan, prior to submission of the plan.

(c) Adult Education and Family Literacy, describe the process that will be used for public participation and comment with respect to the AEFLA portion of the unified plan. (§ 224(b)(9))

(d) TANF, the State shall make available to the public a summary of any plan or plan amendment submitted by the State under this section. (§ 402(c))

(e) CDBG, provide a summary of any public or citizens' comments or views not accepted and the reasons therefore. (§ 91.115(b)(5))

(f) CSBG, provide evidence that the public participation requirements were met, including documents which confirms that a legislative public hearing on the State plan was conducted as required by subsection 675(b) and that the plan was also made available for public inspection and review as required by 675(d)(2).

4. Provide summaries of the consultations with appropriate agencies, groups and individuals in the evaluation, development and implementation of activities included in the plan. This section should describe the types of activities and outcomes that were conducted to meet this requirement. Demonstrate how comments were considered in the plan development process including specific information on how the various WIA agency and program partners were involved in developing the unified State plan.

The following agencies, groups or individuals should be consulted, if your unified plan includes:

(a) Perkins III: (§ 122(a)(3), (b)(1), (c)(3), (e)(3))

- Parents
- Teachers
- Students
- Eligible Recipients
- Representatives of special populations in the State
- Representatives of business and industry in the State, including small- and medium-sized local businesses
- Representatives of labor organizations in the State
- Interested community members
- Governor of the State

In addition, you must consult with the State agency responsible for secondary education and the State agency responsible for supervision of community colleges, technical institutes, or other 2-year post secondary institutions primarily engaged in providing postsecondary vocational and technical education concerning the amount and uses of funds proposed to be reserved for adult vocational and technical education, postsecondary vocational and technical education, tech-prep education, and secondary vocational technical education. Include any objections filed by either agencies in the plan and your response(s). (§ 122(e)(3))

(b) WIA Title I and Wagner-Peyser Act and/or Veterans Programs: (§ 112(b)(1), 112(b)(9))

- The Governor of the State and State Board
- Local elected officials
- Local boards and youth councils
- Business community
- Labor organizations
- Educators
- Vocational rehabilitation agencies
- Service providers
- Welfare agencies
- Community based organizations
- State Employment Security Agency

In addition, describe the role of the State Board and Local Boards in planning and coordination in the unified plan (§ 501(c)(3)).[NOTE: While WIA only requires the involvement of State Board and Local Boards in the planning and coordination of the programs and activities authorized under Title I, the intent of the unified plan approach is to enable all the relevant parties in an area, if they so choose, to come together more readily to coordinate their activities in the best interests of the population to be served. However coordination is achieved, nothing in the unified plan or in WIA itself permits a Board or any other entity to alter the decisions made by another program grantee in accord with that grantee's statutes.'']

(c) Adult Education and Family Literacy:

- Governor of the State (any comments made by the Governor must be included in the plan) (§ 224(d))

(d) Vocational Rehabilitation:

- State Rehabilitation Council (include the response of the designated State unit to such input and recommendations) (§ 101(a)(21)(A)(ii)(III))

(e) Welfare-to-Work: (§ 403(a)(5)(A)(ii)(I)(cc))

- Public, private and non-profit organizations
- PICs or Local Boards
- Local TANF and administrative agency

(f) CDBG:

- Social service agencies (§ 91.300(b))

(g) CSBG:

- Low-income individuals
- Community organizations
- Religious organizations
- Representatives of low-income individuals

D. Needs Assessment

1. Describe the educational and job-training needs of individuals in the overall State population and of relevant subgroups of all the programs included in the unified plan.

Many of the programs that may be included in a unified plan require a needs assessment. State agencies should fulfill these assessment responsibilities collaboratively or, at a minimum, create a planning process that promotes the sharing of needs assessment information among all agencies involved in preparing the unified plan. Sharing of assessment data can create a framework for the coordinated and integrated services that are to be provided through the One-Stop delivery system. The State may organize the presentation of assessment data in its unified plan in a manner it deems most appropriate and useful for planning, such as on a program-by-program basis, by geographic region, or by special population.

In answering the above question, if your unified plan includes:

(a) WIA Title I and Wagner-Peyser Act and/or Veterans Programs, identify the types and availability of workforce investment activities currently in the State. (WIA § 112(b)(4)(D))

(b) Adult Education and Family Literacy, objectively assess the adult education and literacy needs of individuals including an assessment of those most in need and hardest to serve including low income students, individuals with disabilities, single parents, displaced homemakers, and individuals with multiple barriers to educational enhancement (including individuals with limited English proficiency, criminal offenders in correctional institutions and other institutionalized individuals.) (§ 224(b)(10), § 225)

(c) Food Stamp Employment & Training, provide an answer and explain the method used to:

(i) Estimate the number and characteristics of the expected pool of work registrants during the fiscal year.

(ii) Estimate the number of work registrants the State agency intends to exempt from E&T, along with a discussion of the proposed exemption criteria.

(iii) Estimate the number of placements into E&T components during the fiscal year.

(iv) Estimate the number of ABAWDs (able-bodied adult without dependents) in the State during the fiscal year.

(v) Estimate the number of ABAWDs in both waived and unwaived area of the State during the fiscal year.

(vi) Estimate the average monthly number of ABAWDs included in the State's 15 percent exemption allowance, along with a discussion of how the State intends to apply the exemption.

(vii) Estimate the number of qualifying education/training and workfare opportunities for ABAWDS the State will create during the fiscal year.

(d) Vocational Rehabilitation:

(i) Assess the needs of individuals with disabilities in the State, particularly the vocational rehabilitation needs of individuals with the most significant disabilities (including their need for supported employment services), individuals with disabilities who have been unserved or under-served by the vocational rehabilitation program, and individuals with disabilities served through other components of the statewide workforce investment system. (§ 101(a)(15)(A)(i)(I–III) and § 625(b)(2))

(ii) Include State estimates of the number of individuals in the State who are eligible for services under title I of the Rehabilitation Act, the number of such individuals who will receive services provided with funds provided under part B of title I and under part B of title VI (including, if the designated State agency uses an order of selection, estimates of the number of individuals to be served under each priority category within the order), and the costs of the services provided (including, if the designated State agency uses an order of selection, the service costs for each priority category within the order.) (§ 101(a)(15)(B))

(iii) Provide an assessment of the need to establish, develop, or improve community rehabilitation programs within the State. (§ 101(a)(15)(A)(ii))

(e) CDBG:

(i) Describe the State's estimated housing needs projected for the ensuring five-year period. (§ 91.305(a))

(ii) Estimate the number and type of families in need of housing assistance for extremely low income, low-income, moderate-income, and middle-income families, for persons with HIV/AIDS and their families, and for persons with disabilities. Include a discussion of the cost burden and severe cost burden, overcrowding, and substandard housing conditions being experienced by the renters and owners compared to the State as a whole. (§ 91.305(b)(1) and § 91.205(d)(2))

(iii) Estimate the needs of any racial or ethnic group in the above mentioned income categories, if they have are disproportionately in greater need. (Disproportionately greater need exists when the percentage of persons in a category of need is at least 10 percentage points higher that the percentage of persons in the category as a whole.) (§ 91.305(b)(2))

(iv) Describe the nature and extent of homelessness within the State, including a narrative description of the nature and extent homelessness by racial and ethnic group, as well as the need for facilities and services for the homeless (§ 91.305(c))

(v) Estimate the number of housing units within the State that are occupied by low-income families or moderate-income families that contain lead-based paint hazards, as defined in part 91.1. (§ 91.305(e))

(vi) Describe the State's priority non-housing community development needs that affect more than one unit of general local government and involve activities typically funded by the State under the CDBG program. (§ 91.315(e)(1))

(vii) Describe the significant characteristics of the State's housing markets. (§ 91.310(a))

(viii) Provide a brief inventory of facilities and services that meet the needs for emergency shelter and transitional housing needs of homeless persons within the State. (§ 91.310(b))

(f) Public Housing:

(i) Assess the housing needs of low income and very low income families in the jurisdiction of the public housing agency during the five fiscal years immediately following the date on which the plan is submitted. (§ 5A(a)(1), (d)(1))

(ii) Describe the need for measures to ensure the safety of public housing residents and for crime prevention measures. (§ 5A(d)(13)(C))

2. Describe the key trends that are expected to shape the economic environment of the State during the next five years. Which industries are expected to grow? Which will contract? What are the workforce and economic development needs of the State? Identify the implications of these trends in terms of overall availability of current and projected employment opportunities by occupation, and for each of your customer segments, the job skills necessary in key occupations. Also describe how the program services provided relate to State and regional occupational opportunities. (WIA § 112(b)(4) and Perkins § 122(c)(15))

E. State and Local Governance

1. What is the organization, structure and role/function of each State and local entity that will govern the activities of the unified plan?

In answering the above question, if your unified plan includes:

(a) Perkins III, describe the procedures in place to develop the memoranda of understanding outlined in § 121(c) of the Workforce Investment Act of 1998 concerning the provision of services only for postsecondary students and school dropouts. (§ 122(c)(21))

(b) WIA Title and Wagner-Peyser Act and/or Veterans Programs:

(i) Describe the State Workforce Investment Board, or the authorized alternative entity including a description of the manner in which the Board collaborated on the State plan. (WIA § 112(b)(1) and § 111(e))

(ii) Describe the State-imposed requirements for the statewide workforce investment system. (§ 112(b)(2))

(iii) Identify the local areas designated in the State and include a description of the process used for the designation of such areas. (§ 112(b)(5))

(iv) Describe the appeals process referred to in § 116(a)(5). (§ 112(b)(15))

(v) Identify the criteria the State has established to be used by the chief elected officials in the local areas for the appointment of local Board members and establishment of youth councils based on the requirements of § 117. (WIA § 112(b)(6))

(vi) Identify the circumstances which constitute a conflict of interest for any State or State Board and Local Boards member, including voting on any matter regarding the provision of service by that member or the entity that s/he represents, and any matter that would provide a financial benefit to that member or his or her immediate family. (§ 112(b)(13))

(vii) Describe the procedures the local boards will use to identify eligible providers of training services for the Adult and Dislocated worker programs (other than on-the-job training or customized training) (§ 112(b)(17)(A)(iii))

(viii) Describe how the locally operated ITA system will be managed in the State to maximize usage, select services providers, and improve the performance information on training providers. (§ 112(b)(14), 112(b)(17)(A)(iii))

(ix) Identify the criteria to be used by local boards in awarding grants for youth activities, including criteria that the Governor and local boards will use to identify effective and ineffective youth activities and providers of such activities. (§ 112(b)(18)(B))

(x) Describe the competitive and non-competitive processes that will be used at the State level to award grants and contracts for activities under Title I of

WIA, including how potential bidders are being made aware of the availability of grants and contracts. (§ 112(b)(16))

(xi) Include a description of the process by which these entities were created.

(c) Vocational Rehabilitation, designate a State agency as the sole State agency to administer the plan, or to supervise the administration of the plan by a local agency, in accordance with § 101(a)(2)(A). (§ 101(a)(2)(A))

(d) TANF, describe the objective criteria for the delivery of benefits and the determination of eligibility and for fair and equitable treatment, including an explanation of how the State will provide opportunities for recipients who have been adversely affected to be heard in a State administrative or appeal process. (§ 402(a)(1)(B)(iii))

(e) Welfare-to-Work, provide a description of the implementation of this program by PICs (or Local Boards) across the State, including the roles and responsibilities of the State WtW Administrative Agency and the TANF agency; a list of the substate areas and the local entities responsible for program administration; and the program's implementation target dates.

(f) CDBG:

(i) Describe the State's procedures for handling complaints from citizens related to the plan, amendments and performance report. (§ 91.115(h))

(ii) Explain whether the cost of housing or the incentives to develop, maintain, or improve affordable housing in the State are affected by its policies, including tax policies, affecting land and other property, land use controls, zoning ordinance, building codes, fees and charges, growth limits, and policies that affect the return on residential investment. (§ 91.310(d))

(iii) Describe the State's strategy to remove its policies that serve as barriers to affordable housing. (§ 91.315(f))

(iv) Explain the institutional structure, including private industry, non-profit organizations, and public institutions, through which the State will carry out its housing and community development plan, assessing the strengths and gaps in that delivery system. (§ 91.315(i))

(g) Public Housing:

(i) Provide a statement of the grievance procedures of the public housing agency. (§ 5A(d)(6))

(ii) Provide a statement of how the agency will carry out its asset management functions with respect to the public housing inventory of the agency, including how the agency will plan for the long-term operating, capital investment, and rehabilitation, modernization, disposition, and other needs for such inventory. (§ 5A(d)(17))

(iii) Provide a statement of the rules, standards, and policies, of the public housing agency, governing maintenance and management of housing owned, assisted, or operated, by the public housing agency and management of the public housing agency and programs of the public housing agency. (§ 5A(d)(5))

(iv) Provide the requirements of the agency relating to pet ownership in public housing. (§ 5A(d)(14))

F. Funding

1. What criteria will the State use, consistent with each program's authorizing law, to allocate funds for each of the programs included in the unified plan? Describe how the State will use funds the State receives to leverage other Federal, State, local, and private resources, in order to maximize the effectiveness of such resources, and to expand the participation of business, employees, and individuals in the statewide workforce investment system. (WIA § 112(b)(10))

In answering the above question, if your unified plan includes:

(a) Perkins III:

(i) describe the criteria that you will use in approving applications by eligible recipients for funds under Perkins III. (§ 122(c)(1)(B))

(ii) Describe how funds received through the allotment made under section 111 will be allocated among secondary school vocational and technical education, or postsecondary and adult vocational and technical education, or both, including the rationale for such allocation. (§ 122(c)(4)(A))

(iii) Describe how funds received through the allotment made under section 111 will be allocated among consortia which will be formed among secondary schools and eligible institutions, and how funds will be allocated among the members of the consortia, including the rationale for such allocation. (§ 122(c)(4)(B))

(iv) If you decide to develop an alternative allocation formula under the authority of sections 131(c) and/or 132(b), submit the proposed formula and supporting documentation to the Secretary of Education for approval prior to the submission of your State plan or as a part of the State unified plan. (§ 131(c) and § 132(b))

(b) Tech-Prep, describe how you will award tech-prep funds in accordance with the requirements of § 204(a) and § 205 of Perkins III, including whether grants will be awarded on a competitive basis or on the basis of a formula determined by the State.

(c) *WIA Title I and Wagner-Peyser Act and/or Veterans Programs:*

(i) Describe the methods and factors the State will use in distributing funds to local areas for youth activities and adult employment and training activities under sections 128(b)(3)(B) and 133(b)(3)(B) including a description of how the individuals and entities represented on the State board were involved in determining such methods and factors of distribution and how the State consulted with chief elected officials in local areas throughout the State in determining such distributions. (§ 112(b)(12)(A))

(ii) Describe the assistance available to employers and dislocated workers, particularly how your state determines what assistance is required based on the type of lay-off, and the early intervention strategies undertaken to ensure that dislocated workers who need intensive or training services (including those individuals with multiple barriers to employment and training) are identified and receive needed services as early as possible.

(iii) Identify the State dislocated worker unit which will be responsible for carrying out rapid response activities and how the State will provide such assistance in collaboration with the local Board and chief elected officials, economic development agencies, etc.

(iv) Describe the formula prescribed by the Governor for the allocation of funds to local areas for dislocated workers in Employment and Training activities. (§ 112(b)(12)(C))

(v) Describe, in detail, the plans required under Section 8 of the Wagner-Peyser Act which will be carried out by the State. (§ 112(7))

(vi) Describe the guidelines, if any, the State has established for Local Boards regarding priority when adult funds have been determined to be limited. (§ 112(b)(17(A)(iv) and 134(d)(4)(E))

(d) *Adult Education and Family Literacy:*

(i) Describe how the eligible agency will fund local activities in accordance with the considerations described in § 231(e) and the other requirements of Title II of WIA. (§ 224(b))

(ii) Describe the process to show that public notice was given of the availability of Federal funds to eligible recipients and the procedures for submitting applications to the State, including approximate time frames for the notice and receipt of applications. (§ 231(c))

(iii) Describe how the eligible agency will use funds made available under Section 222(a)(2) for State leadership activities. (§ 223(a))

(iv) Describe the steps the eligible agency will take to ensure direct and equitable access, as required in section 231(c). (§ 224(b)(12))

(e) *Food Stamp Employment & Training:*

(i) Estimate the total cost of the State's E&T program and identify the source of funds according to the format for Table 5, Planned Fiscal Year Costs, contained in the most current release of ''The Handbook on Preparing State Plans for Food Stamp Employment and Training Programs.''

(ii) Acknowledge that the State will spend at least 80 percent of its total 100 percent Federal E&T grant to create qualifying work opportunities to permit ABAWDs to remain eligible for food stamps.

(iii) Indicate, if applicable, whether the State agency intends to spend at least as much as it spent of its own funds in FY 96 for E&T and optional workfare administration to receive the additional 100 percent Federal allocations provided for in the Balanced Budget Act of 1997.

(iv) Describe both the expected sources and the status of State agency funding for participant reimbursement.

(f) *Welfare-to-Work,* describe the State's plans for the expenditure, uses and goals of the 15% funds.

(g) *TANF,* indicate the name, address, and EIN number of the TANF administering agency and estimate for each quarter of the fiscal year by percentage the amount of TANF grant that it wishes to receive.

(h) *Vocational Rehabilitation:*

(i) Describe how the State will utilize funds reserved for the development and implementation of innovative approaches to expand and improve the provision of vocational rehabilitation services to individuals with disabilities under the State plan, particularly individuals with the most significant disabilities. (§ 101(a)(18)(B))

(ii) Describe the quality, scope, and extent of supported employment services authorized under the Act to be provided to individuals who are eligible under the Act to receive the services. (§ 625(b)(3))

(iii) In the event that vocational rehabilitation services cannot be provided to all eligible individuals with disabilities in the State who apply for services, indicate the order to be followed in selecting eligible individuals to be provided vocational rehabilitation services and provide the justification for the order. (§ 101(a)(5)(A)–(B))

(i) *CDBG:*

(i) Indicate the general priorities for allocating investment and direct assistance geographically within the State and among priority needs during the ensuing program year. (§ 91.315(a)(1) and § 91.320(d))

(ii) Indicate how the characteristics of the housing market will influence the use of funds made available for rental assistance, production of new units, rehabilitation of old units or acquisition of existing units. (§ 91.315(b)(2))

(iii) Describe the Federal resources expected to be available to address the priority needs and specific objectives identified in the strategic plan, in accordance with § 91.315. (§ 91.320(b)(1))

(iv) Indicate the resources from private and non-Federal public sources that are reasonably expected to be made available to address the needs in the plan, including how Federal funds will leverage those additional resources such as how matching requirements of the HUD programs will be satisfied. (§ 91.320(b)(2))

(v) Describe the State's method for selecting and distributing funds to local governments and nonprofit organizations to carry out activities including the relative importance of the criteria and how all CDBG resources will be allocated among all funding categories and the threshold factors and grant size limits that are to be applied. (§ 91.320(g)(1), (c))

(j) *Public Housing:*

(i) Provide a statement of financial resources available to the agency. (§ 5A(d)(2))

(ii) Provide the results of the most recent fiscal year audit of the Public Housing Authority under section 5(h)(2) (H.R. 4194). (§ 5A(d)(16))

(k) *CSBG,* describe how the State intends to use discretionary funds made available from the remainder of the grant or allotment described in § 675C(b), including a description of how the local entity will use the funds to support innovative community and neighborhood-based initiatives.

G. Activities To Be Funded

1. For each of the programs in your unified plan, provide a general description of the activities the State will pursue using the relevant funding.

In answering the above question, if your unified plan includes:

(a) *Perkins III:*

(i) Describe the vocational and technical education activities to be assisted that are designed to meet or exceed the State adjusted levels of performance. (§ 122(c)(1))

(ii) Describe the secondary and postsecondary vocational and technical education programs to be carried out, including programs that will be carried out by the eligible agency to develop, improve, and expand access to quality, state-of-the-art technology in vocational and technical education programs. (§ 122(c)(1)(A))

(iii) Describe how funds will be used to improve or develop new vocational and technical education courses and effectively link secondary and postsecondary education. (§ 122(c)(1)(D) and § 122(c)(19))

(iv) Describe how you will improve the academic and technical skills of students participating in vocational and technical education programs, including strengthening the academic, and vocational and technical, components of vocational and technical education programs through the integration of academics with vocational and technical education to (1) Ensure learning in the core academic, vocational and technical subjects; (2) Provide students with strong experience in, and understanding of, all aspects of an industry; and (3) Prepare students for opportunities in post-secondary education or entry into high skill and high wage jobs in current and emerging occupations. (§ 122(c)(1)(C) and (5)(A))

(v) Describe how you will ensure that students who participate in such vocational and technical education programs are taught to the same challenging academic proficiencies as are taught to all other students. (§ 122(c)(5)(B))

(b) Tech-Prep, describe how funds will be used in accordance with the requirements of § 204(c).

(c) WIA Title I and Wagner-Peyser Act and/or Veterans Programs,:

(i) Describe how Wagner-Peyser Act funds will provide a statewide capacity for a three-tiered labor exchange service strategy that includes: (1) Self-service; (2) Facilitated self-help service; and (3) Staff-assisted service.

(ii) Describe your State's strategies to ensure that Wagner-Peyser Act-funded services will be delivered by public merit staff employees including identification of the State agency responsible for Wagner-Peyser Act funds and their distribution, and identification of the public merit-staff agency responsible for the delivery of services in each workforce investment area.

(iii) Describe how your State will ensure that veterans receive priority in the One-Stop system for labor exchange services.

(iv) Describe the types of employment and training activities that will be carried out with the adult and dislocated worker funds received by the State through the allotments under Section 132. How will the State

maximize customer choice in the selection of training activities? (§ 112(b)(17)(A)(i))

(v) Define the sixth youth eligibility criterion at § 101(13)(C)(vi), if this responsibility was not delegated to local Boards. (§ 112(b)(18)(A))

(vi) Describe the assistance available to employers and dislocated workers, particularly how your State determines what assistance is required based on the type of lay-off, and the early intervention strategies to ensure that dislocated workers who need intensive or training services (including those individuals with multiple barriers to employment and training) are identified as early as possible. Additionally, identify the State dislocated worker unit which will be responsible for carrying out the rapid response activities. (§ 112(b)(17)A)(ii))

(vii) Describe your State's strategy for providing comprehensive services to eligible youth, including any coordination with foster care, education, welfare and other relevant resources. (§ 112(b)(18))

(viii) Describe the strategies to assist youth who have special needs or significant barriers to employment, including those who are deficient in basic literacy skills, school drop-outs, offenders, pregnant, parenting, homeless, foster children, runaways or have disabilities. (§ 112(b)(18))

(ix) Describe how coordination with Job Corps, youth opportunity grants, and other youth programs will occur. (§ 112(b)(18))

(d) Adult Education and Family Literacy, describe the Adult Education and Family Literacy activities the State will provide within the following categories: (§ 224(b)(2), § 231(b))

- Adult Education and Literacy services, including workplace literacy services
- Family literacy services
- English literacy programs

(e) Food Stamp Employment & Training:

(i) Describe the components of the State's E&T program.

(ii) Discuss the weekly/monthly hours of participation required of each program component.

(iii) Describe planned combinations of components to meet the statutory requirement of 20 hours of participation per week to qualify as a work program for ABAWDS.

(f) TANF, outline how the State intends to:

(i) Conduct a program, designed to serve all political subdivisions in the State (not necessarily in a uniform manner), that provides assistance to needy families with (or expecting) children and provides parents with job preparation, work, and support services to enable them to leave the program and become self-sufficient. (§ 402(a)(1)(A)(i))

(ii) Require a parent or caretaker receiving assistance under the program to engage in work (as defined by the State) once the State determines the parent or caretaker is ready to engage in work, or once the parent or caretaker has received assistance under the program for 24 months (whether or not consecutive,) whichever is earlier, consistent with section 407(e)(2). (§ 402(a)(1)(A)(ii))

(iii) Ensure that parents and caretakers receiving assistance under the program engage in work activities in accordance with section 407. (§ 402(a)(1)(A)(iii))

(iv) Take such reasonable steps as deemed necessary to restrict the use and disclosure of information about individuals and families receiving assistance under the program attributable to funds provided by the Federal government. (§ 402(a)(1)(A)(iv))

(g) Welfare-to-Work, describe State and local strategies regarding:

(i) The employment activities that are planned under this grant.

(ii) The utilization of contracts with public and private providers of job readiness, placement and post-employment services; job vouchers for placement, readiness, and post-employment services; job retention, or support services, if not otherwise available to the individual participants receiving WtW services, that are planned under this grant.

(h) SCSEP, provide a description of each project function or activity and how the applicant will implement the project. The following activities should be discussed separately: (§ 3(A))

- Recruitment and selection of enrollees
- Continued eligibility for enrollment in the SCSEP
- Physical examinations
- Orientations
- Assessment
- Individual development plan (IDP)
- Placement into subsidized employment
- Training during community service employment and for other employment
- Supportive services
- Enrollee transportation
- Placement into unsubsidized employment
- Maximum duration of enrollment
- IDP related terminations
- Enrollee complaint resolution
- Over-enrollment

(i) CDBG:

(i) Describe the basis for assigning the priority given to each category of priority needs. The basis for assigning relative priority to each category of priority need shall state how the analysis of the housing market and the severity of housing problems and needs of extremely low-income, low-income, and moderate-income renters and owners. (§ 91.315(a)(2) and (b)(1))

(ii) Describe the State's strategy for the following:

- Helping low-income families avoid becoming homeless (§ 91.315(c))
- Reaching out to homeless persons and assessing their individual needs
- Addressing the emergency shelter and transitional housing needs of homeless persons
- Helping homeless persons make the transition to permanent housing and independent living
- Addressing obstacles to meeting underserved needs (§ 91.320(f))
- Fostering and maintaining affordable housing
- Removing barriers to affordable housing
- Evaluating and reducing lead-based paint hazards
- Reducing the number of poverty level families
- Developing institutional structure
- Enhancing coordination between public and private housing and social service agencies
- Fostering public housing resident initiatives
- Encouraging public housing residents to become more involved in management and participate in homeownership. (§ 91.315(l))

(iii) HOME (§ 92.320(g)(2):

- Describe other forms of investment that are not described in § 92.205(b) of the subtitle.
- If the State intends to use HOME funds for homebuyers or to refinance existing debt secured by multifamily housing that is being rehabilitated, it must state the guidelines for resale or recapture as required in § 92.254 of the subtitle or it must state its refinancing guidelines required under 24 CFR 92.206(b).
- State whether the new investment is being made to maintain current affordable units, create additional affordable units, or both.
- Specify the required period of affordability, whether it is the minimum 15 years or longer.
- Specify whether the invest of HOME funds may be jurisdiction-wide or limited to a specific geographic area
- State the process for awarding grants to State recipients and a description of how the State intends to make its

allocation available to units of local government and nonprofit organizations.

(j) Public Housing:

(i) Describe the policies governing eligibility, selection, admissions (including any preferences,) before assignment and occupancy of families with respect to public housing dwelling units and housing assistance under section 8(o), including the procedures for maintaining waiting lists for admissions to public housing projects and the admissions policy under section 16(a)(3)(B) for deconcentration of lower-income families. (§ 5A(d)(3)(A–B))

(ii) Provide a statement of the policies of the public housing agency governing rents charged for public housing dwelling units and rental contributions of families assisted under section 8(o). (§ 5A(d)(4))

(iii) Describe any housing for which the PHA will apply for demolition of disposition under section 18 (H.R. 4194) and a timetable for the demolition or disposition. (§ 5A(d)(8))

(iv) Describe the building that the PHA will convert to tenant-based assistance under section 33 or section 22. (§ 5A(d)(10))

(v) Describe any homeownership programs of the agency under section 8(y) or section 32. (§ 5A(d)(11))

(vi) describe any activities conducted to ensure the safety of public housing residents and for crime prevention measures (§ 5A(d)(13)(C))

(vii) In terms of Community Service and Self Sufficiency, describe

—Any programs relating to services and amenities provided or offered to assisted families;

—Any policies or programs of the public housing agency for the enhancement of the economic and social self sufficiency of assisted families;

—How the public housing agency will comply with the requirements of subsections (c) and (d) of Section 12 (relating to community service and treatment of income changes resulting from welfare program requirements). (§ 5A(d)(12))

(k) CSBG, explain how the activities funded will:

(i) Remove obstacles and solve problems that block the achievement of self-sufficiency, including those families and individuals who are attempting to transition off a State program carried out under part A of Title IV of the Social Security Act.

(ii) Secure and retain meaningful employment.

(iii) Attain an adequate education, with particular attention toward improving literacy skills of the low-income families in the communities involved, which may include carrying out family literacy initiatives.

(iv) Make better use of available income.

(v) Obtain and maintain adequate housing and a suitable living environment.

(vi) Obtain emergency assistance through loans, grants, or other means to meet immediate and urgent family and individual needs.

(vii) Achieve greater participation in the affairs of the communities involved, including the development of public and private grassroots partnerships with local law enforcement agencies, local housing authorities, private foundation, and other public and private partners.

(viii) Create youth development programs that support the primary role of the family, give priority to the prevention of youth problems and crime, and promote increased community coordination and collaboration in meeting the needs of youth, and support development and expansion of innovative community-based youth development programs that have demonstrated success in preventing or reducing youth crime.

(ix) Provide supplies, services, nutritious foods, and related services, as may be necessary to counteract conditions of starvation and malnutrition among low-income individuals.

H. Coordination and Non-Duplication

1. Describe how your State will coordinate and integrate the services provided through all of the programs identified in the unified plan in order to meet the needs of its customers, ensure there is no overlap or duplication among the programs, and ensure collaboration with key partners and continuous improvement of the workforce investment system. (States are encouraged to address several coordination requirements in a single narrative, if possible.)

In answering the above question, if your unified plan includes:

(a) Perkins III, describe coordination with the following agencies or programs:

- Programs listed in section 112(b)(8)(A) of the Workforce Investment Act of 1998 (§ 122(c)(21))
- Other Federal education programs, including any methods proposed for joint planning (§ 122(c)(16))

(b) WIA Title I and Wagner-Peyser Act and/or Veterans Programs:

(i) Describe the strategies of the State to assure coordination, avoid duplication and improve operational collaboration of the workforce investment activities among programs outlined in Section 112(b)(8)(A) and Section 112(b)(18)(C)&(D) of WIA 1998, at both the state and local levels (*e.g.,* joint activities, MOUs, planned mergers, coordinated policies, non-discrimination obligations, etc.).

(ii) Describe how the State Board and Agencies will eliminate any existing state-level barriers to coordination. (§ 112(b)(8)(A))

(c) Adult Education and Family Literacy, describe how the Adult Education and Family Literacy activities that will be carried out with any funds received under AEFLA will be integrated with other adult education, career development, and employment and training activities in the State or outlying area served by the eligible agency. (§ 224(b)(11))

(d) Vocational Rehabilitation:

(i) Describe the State agency's plans policies, and procedures for coordination with the following agencies or programs:

- Federal, State and local agencies and programs, including programs carried out by the Under Secretary for Rural Development of the Department of Agriculture and State use contracting programs to the extent that such agencies and programs are not carrying out activities through the statewide workforce investment system. (§ 101(a)(11)(C))
- Education officials responsible for the public education of students with disabilities, including a formal interagency agreement with the State educational agency. (§ 101(a)(11)(D))
- Private, non-profit vocational rehabilitation service providers through the establishment of cooperative agreements. (§ 101(a)(24)(B))
- Other State agencies and appropriate entities to assist in the provision of supported employment services. (§ 625(b)(4))
- Other public or nonprofit agencies or organizations within the State, employers, natural supports, and other entities with respect to the provision of extended services. (§ 625(b)(5))

(e) Unemployment Insurance, summarize requests for any Federal partner assistance (primarily non-financial) that would help the SESA attain its goal.

(f) Welfare-to-Work, describe the strategies of the State and PICs (or State Board and Local Boards) to prevent duplication of services and promote coordination among the following agencies or programs:

- TANF

- JTPA/WIA
- One-Stop centers/employment services
- Other employment and training systems throughout the State
- State Department of Transportation
- Metropolitan planning organizations
- Transit operators
- Other transportation providers
- State Housing Finance Agencies
- Public and assisted housing providers and agencies and other community-based organizations
- Public and private health, mental health and service agencies
- Vocational rehabilitation and related agencies

(g) SCSEP, describe the cooperative relationships and working linkages that have been established or will be established with the following employment related programs and agencies:

- JTPA/WIA (§ 3(a)(11))
- One-Stop Delivery Centers
- Vocational Rehabilitation
- Job Corps
- State employment security agencies
- Agencies administering Titles III, IV and VI of the Older Americans Act

(h) CSBG, describe how the State and eligible entities will coordinate programs to serve low-income residents with other organizations, including:

- Religious organizations
- Charitable groups
- Community organizations

(i) CDBG:

(i) Describe how the actions taken to reduce lead-based paint hazards will be integrated into housing policies and programs. (§ 91.315(g))

(ii) Describe coordination between (§ 91.315(j)) and

- Public and assisted housing providers
- Private and governmental health, mental health and service agencies
- Low-income Housing Tax Credit and the development of affordable housing (§ 91.315(k))

(j) Public Housing, describe coordination with the applicable comprehensive housing affordability strategy (or any consolidated plan incorporating such strategy) for the jurisdiction in which the public housing agency is located. (§ 5A(c)(2)(B))

I. Special Populations and Other Groups

1. Describe how your State will develop program strategies, to target and serve special populations. States may present information about their service strategies for those special populations that are identified by multiple Federal programs as they deem most appropriate and useful for planning purposes, including by special population or on a program by program basis.

In providing this description, if your unified plan includes any of the programs listed below, please address the following specific relevant populations:

(a) Perkins III:

- Each category of special populations defined in § 3(23) of the Act. (§ 122(c)(12))
- Students in alternative education programs, if appropriate (§ 122(c)(13))
- Individuals in State correctional institutions (§ 122(c)(18))

(i) Describe how funds will be used to promote preparation for nontraditional training and employment. (§ 122(c)(17))

(ii) Describe how individuals who are members of special populations will not be discriminated against on the basis of their status as members of special populations. (§ 122(c)(8)(B))

(b) WIA Title I and Wagner-Peyser Act and/or Veterans Programs: (§ 112(b)(17)(A)(iv) and § 112(b)(17)(B))

- Dislocated workers, including displaced homemakers
- Low-income individuals, including recipients of public assistance
- Individuals training for non-traditional employment
- Individuals with multiple barriers to employment (including older individuals, people with limited English-speaking ability, and people with disabilities)
- Veterans, including veterans' preferences under 38 U.S.C. Chapters 41 and 42.
- The agricultural community that serves the migrant and seasonal farmworker population
- UI claimants who are identified under Worker Profiling and Reemployment Services

(c) Adult Education and Family Literacy:

- Low income students (§ 224(b)(10)(A))
- Individuals with disabilities (§ 224(b)(10)(B))
- Single parents and displaced homemakers (§ 224(b)(10)(C))
- Individuals with multiple barriers to educational enhancement, including individuals with limited English proficiency (§ 224(b)(10)(D))
- Criminal offenders in correctional institutions and other institutionalized individuals (§ 225)

(d) TAA and NAFTA–TAA, describe how rapid response and basic readjustment services authorized under other Federal laws will be provided to trade-impacted workers.

(e) Vocational Rehabilitation:

- Minorities with most significant disabilities (§ 21(c))

(f) TANF, indicate whether the State intends to:

- Treat families moving into the State from another State differently than other families under the program, and if so, how the State intends to treat such families under the program.
- Provide assistance under the program to individuals who are not citizens of the United States, and if so, shall include an overview of such assistance. (§ 402(a)(1)(B)(i) and (ii))

(i) Outline how the State intends to conduct a program designed to reach State and local law enforcement officials, the education system, and relevant counseling services, that provides education and training on the problem of statutory rape so that teenage pregnancy prevention programs may be expanded in scope to include men. (§ 401(a)(1)(A)(vi))

(g) SCSEP: (§ 3(a)(1))

- Minority groups
- Individuals with the greatest economic need
- Individuals with poor employment prospects

(h) CDBG:

(i) Estimate the number of persons who are not homeless but require supportive housing including: (§ 91205(d)(1))

- The elderly
- The frail elderly
- Persons with disabilities
- Persons with alcohol or other drug addiction
- Persons with HIV/AIDS and their families

(vii) Describe the facilities and services that assist persons who are not homeless but who require supportive housing, and programs for ensuring that persons returning from mental and physical health institutions receive appropriate supportive housing. (§ 91.310(b))

(i) CSBG:

- Low-income families
- Families and individuals receiving assistance under part A of Title IV of the Social Security Act (42 U.S.C. 601 *et seq.*)
- Homeless families and individuals
- Migrant or seasonal farmworkers
- Elderly low-income individuals and families
- Youth in low-income communities

(j) Public Housing:

(i) Describe coordination with the applicable comprehensive housing affordability strategy (or any

consolidated plan incorporating such strategy) for the jurisdiction in which the public housing agency is located. (§ 5A(c)(2)(B))

(ii) Describe any projects (with respect to public housing projects owned, assisted, or operated by the public housing agency) that the public housing agency has designated or will apply for designation for occupancy by elderly and disabled families. (§ 5A(d)(9))

2. Identify the methods of collecting data and reporting progress on the special populations described in Question 1 of this section.

3. If your plan includes *Perkins III, Tech-Prep, Adult Education and Family Literacy* or *Vocational Rehabilitation*, describe the steps the eligible agency will take to ensure equitable access to, and equitable participation in, projects or activities carried out with the respective funds by addressing the special needs of student, teachers, and other program beneficiaries in order to overcome barriers to equitable participation, including barriers based on gender, race, color, national origin, disability, and age. (§ 427(b) General Education Provisions Act.)

J. Professional Development and System Improvement

1. How will your State develop personnel to achieve the performance indicators for the programs included in your plan?

In answering the above question, if your unified plan includes:

(a) Perkins III:

(i) Describe how comprehensive professional development (including initial teacher preparation) for vocational and technical, academic, guidance, and administrative personnel will be provided. (§ 122(c)(2))

(ii) Describe how you will provide local educational agencies, area vocational and technical education schools, and eligible institutions in the State with technical assistance. (§ 122(c)(14))

(b) WIA Title I and Wagner-Peyser Act and/or Veterans Programs, explain how the local and State Boards will use data collected and the review process to reinforce the strategic direction and continuous improvement of the workforce investment system.

(c) Vocational Rehabilitation, describe the designated State agency's policies, procedures and activities to establish and maintain a comprehensive system of personnel development designed to ensure an adequate supply of qualified State rehabilitation professional and paraprofessional personnel for the designated State unit pursuant to § 101(a)(7) of the Act. (§ 101(a)(7))

2. If *Public Housing* is part of your unified plan, describe the capital improvements necessary to ensure long-term physical and social viability of the projects. (§ 5A(d)(7))

K. Performance Accountability

Nothing in this guidance shall relieve a State of its responsibilities to comply with the accountability requirements of WIA Title I and II and the Carl D. Perkins Vocational and Technical Education Act of 1998 (Perkins III), including, for example, the requirements to renegotiate performance levels at statutorily defined points in the 5-year unified plan cycle. The appropriate Secretary will negotiate adjusted levels of performance with the State for these programs prior to approving the State plan.

1. What are the State's performance indicators and goals in measurable, quantifiable terms for each program included in the unified plan and how will each program contribute to achieving these performance goals? (Performance indicators are generally set out by each program's statute.)

In answering the above question, if your unified plan includes:

(a) Perkins III and Tech-Prep:

(i) Identify and describe the core indicators (§ 113(b)(2)(A)(i–iv)), a State level of performance for each core indicator of performance for the first two program years covered by the State plan (§ 113(b)(3)(A)(ii), any additional indicators identified by the eligible agency (§ 113(b)(1)(B)), and a State level of performance for each additional indicator (§ 113(b)(3)(B)).

(ii) Describe how the effectiveness of vocational and technical education programs will be evaluated annually. (§ 122(c)(6))

(iii) Describe how individuals who are member of special populations will be provided with programs designed to enable the special populations to meet or exceed State adjusted levels of performance, and how it will prepare special populations for further learning and for high skill, high wage careers. (§ 122(c)(8)(C))

(iv) describe what steps the eligible agency will take to involve representatives of eligible recipients in the development of the State adjusted levels of performance. (§ 122(c)(9))

(b) WIA Title I and Wagner-Peyser Act and/or Veterans Programs:

(i) Describe the State performance accountability system developed for the workforce investment activities to be carried out through the statewide workforce investment system. Include expected levels of performance for each of the core indicators of performance and the customer satisfaction indicator of performance for the first three program years covered by the unified plan. (Sections 112(b)(3) and 136(b)(3)(A)(ii))

(ii) Compare the State level of the performance goals with the State adjusted levels of performance established for other States (if available), taking into account differences in economic conditions, the characteristics of participants when they entered the program and the services to be provided. (Sections 112(b)(3) and 136(b)(3)(A)(ii))

(c) Adult Education and Family Literacy:

(i) Include a description of how the eligible agency will evaluate annually the effectiveness of the Adult Education and Family Literacy activities, such as a comprehensive performance accountability system, based on the performance measures in § 212.

(ii) Identify levels of performance for the core indicators of performance described in § 212(b)(2)(A) for the first three program years covered by the plan (§ 212(b)(3)(A)(ii)), and any additional indicators selected by the eligible agency. (§ 212 (b)(2)(B))

(iii) Describe how such performance measures will be used to ensure the improvement of Adult Education and Family Literacy activities in the State or outlaying area. (§ 224(b)(4))

(d) Unemployment Insurance:

(i) Submit a plan to achieve an enhanced goal in service delivery for areas in which performance is not deficient. Goals may be set at a State's own initiative or as the result of negotiations initiated by the Regional Office.

(ii) Identify milestones/intermediate accomplishments that the SESA will use to monitor progress toward the goals.

(e) TANF, outline how the State intends to establish goals and take action to prevent and reduce the incidence of out of wedlock pregnancies, with special emphasis on teenage pregnancies, and establish numerical goals for reducing the illegitimacy ratio of the State for calendar years 1996 through 2005. (§ 402(a)(1)(A)(v))

(f) SCSEP, specify the number of authorized employment positions under the program, the number of unsubsidized placements to be achieved during the funding period and the number of enrollees to be served during the program year.

(g) CSBG:

(i) Describe how the State and all eligible entities in the State will, not later than fiscal year 2001, participate in the Results Oriented Management and

Accountability System, a performance measure system pursuant to § 678E(b) of the Act, or an alternative system for measuring performance and results that meets the requirements of that section, and a description of outcome measures to be used to measure eligible entity performance in promoting self-sufficiency, family stability, and community revitalization.

(ii) Describe the standards and procedures that the State will use to monitor activities carried out in furtherance of the plan and will use to ensure long-term compliance with requirements of the programs involved, including the comprehensive planning requirements. (§ 91.330)

2. Has the State developed any common performance goals applicable to multiple programs? If so, describe the goals and how they were developed.

L. Data Collection

1. What processes does the State have in place to collect and validate data to track performance and hold providers/operators/subgrantees accountable?

In answering the above question, if your unified plan includes:

(a) Perkins III and Tech-Prep:

(i) Describe how data will be reported relating to students participating in vocational and technical education in order to adequately measure the progress of the students, including special populations. (§ 122(c)(12))

(ii) Describe how the data reported to you from local educational agencies and eligible institutions under Perkins III and the data you report to the Secretary are complete, accurate, and reliable. (§ 122(c)(20))

(b) WIA Title I and Wagner-Peyser Act and/or Veterans Programs, describe the common data collection and reporting processes to be used for the programs and activities described in § 112(b)(8)(A). (§ 112(b)(8)(B))

(c) Food Stamp Employment & Training, describe how employment and training data will be compiled and where responsibility for employment and training reporting is organizationally located at the State level. Include the department, agency, and telephone number for the person(s) responsible for both financial and non-financial E&T reporting.

2. What common data elements and reporting systems are in place to promote integration of unified plan activities?

In addition, if your plan includes:

(a) WIA Title I and Wagner-Peyser Act and/or Veterans Programs, describe the common data collection and reporting processes used for the programs and activities described in § 112 (b)(8)(A). (§ 112(b)(8)(B))

M. Corrective Action

1. Describe the corrective actions the State will take for each program, as applicable, if performance falls short of expectations.

In answering the above question, if your unified plan includes:

(a) Vocational Rehabilitation, include the results of an evaluation of the effectiveness of the vocational rehabilitation program, and a report jointly developed with the State Rehabilitation Council (if the State has a Council) on the progress made in improving effectiveness from the previous year including:

(i) An evaluation of the extent to which program goals were achieved and a description of the strategies that contributed to achieving the goals.

(ii) To the extent the goals were not achieved, a description of the factors that impeded that achievement.

(iii) An assessment of the performance of the State on the standards and indicators established pursuant to section 106 of the Act. (§ 101(a)(15)(E)(i))

(b) Unemployment Insurance, explain the reasons for the areas in which the State's performance is deficient. If a plan was in place the previous fiscal year, provide an explanation of why the actions contained in that plan were not successful in improving performance and an explanation of why the actions now specified will be more successful.

III. Certifications and Assurances

General Certifications and Assurances

By signing the Unified Plan signature page, you are certifying that:

1. The methods used for joint planning and coordination of the programs and activities included in the unified plan included an opportunity for the entities responsible for planning or administering such programs and activities to review and comment on all portions of the unified plan. Workforce Investment Act, 501(c)(3)(B)

In addition, if you submit your unified plan by posting it on an Internet web site, you are certifying that:

2. The content of the submitted plan will not be changed after it is submitted. Plan modifications must be approved by the reviewing agency. It is the responsibility of the designated agency to circulate the modifications among the other agencies that may be affected by the changes.

In addition, the following certifications and assurances apply to the extent that the programs and activities are included in your State Unified Plan.

3. Nonconstruction Programs:

By signing the Unified Plan signature page, you are certifying that:

1. The grantee has filed the Government-wide standard assurances for nonconstruction programs (SF 424). States can print SF 424 from http://ocfo.ed.gov/grntinfo/appforms.htm.

EDGAR Certifications, Nonconstruction Programs, Debarment, Drug-Free Work Place and Lobbying Certifications

You must include the following certifications for each of the State agencies that administer one of these programs: Perkins III, Tech-Prep, Adult Education and Literacy or Vocational Rehabilitation. A State may satisfy the EDGAR requirement by having all responsible State agency officials sign a single set of EDGAR certifications.

EDGAR Certifications

By signing the Unified Plan signature page, you are certifying that:

1. The plan is submitted by the State agency that is eligible to submit the plan. [34 CFR 76.104(a)(1)]

2. The State agency has authority under State law to perform the functions of the State under the program. [34 CFR 76.104(a)(2)]

3. The State legally may carry out each provision of the plan. [34 CFR 76.104(a)(3)]

4. All provisions of the plan are consistent with State law. [34 CFR 76.104(a)(4)]

5. A State officer, specified by title in the certification, has authority under State law to receive, hold, and disburse Federal funds made available under the plan. [34 CFR 76.104(a)(5)]

6. The State officer who submits the plan, specified by title in the certification, has authority to submit the plan. [34 CFR 76.104(a)(6)]

7. The agency that submits the plan has adopted or otherwise formally approved the plan. [34 CFR 76.104(a)(7)]

8. The plan is the basis for State operation and administration of the program. [34 CFR 76.104(a)(8)]

9. A copy of the State plan was submitted into the State Intergovernmental Review Process. [Executive Order 12372]

Debarment, Drug-Free Work Place, and Lobbying

By signing the Unified Plan signature page, you are certifying that:

1. The ED grantee has filed ED 80–0013. This form also applies to AEFLA and RSA. States can print ED 80–0013 from http://ocfo.ed.gov/grntinfo/appforms.htm.

Perkins III

By signing the Unified Plan signature page, you are certifying that:

1. The State plan complies with the requirements of Title I and the provisions of the State plan, including the provision of a financial audit of funds received under this title which may be included as part of an audit of other Federal or State programs. (§ 122(c)(10))

2. None of the funds expended under title I will be used to acquire equipment (including computer software) in any instance in which such acquisition results in a direct financial benefit to any organization representing the interests of the purchasing entity, the employees of the purchasing entity, or any affiliate of such an organization. (§ 122(c)(11))

3. § 501(b)(1) provides that secondary vocational education programs authorized under Perkins III may only be included in a unified plan ''with the prior approval of the legislature of the State.'' Documentation of this approval is submitted with the unified plan. State legislative approval may be conferred by a resolution adopted by votes of both houses of your State legislature (unless your State has a unicameral legislature) on any date following July 28, 1998. The resolution need not be freestanding; it may be included as an amendment to other legislation. In either event, the resolution should be specific and refer to the requirements of section 501(b)(1) and must clearly differentiate between secondary and postsecondary vocational education.

WIA Title I/Wagner-Peyser Act/Veterans Programs

By signing the Unified Plan signature page, you are certifying that:

1. The State Board will ensure that the public (including people with disabilities) has access to Board meetings and information regarding State Board activities, including membership and meeting minutes. (§ 112(b)(1))

2. The State assures that it will establish, in accordance with section 184 of the Workforce Investment Act, fiscal control and fund accounting procedures that may be necessary to ensure the proper disbursement of, and accounting for, funds paid to the State through the allotments made under sections 127 and 132. (§ 112(b)(11))

3. The State assures that it will comply with section 184(a)(6), which requires the Governor to, every two years, certify to the Secretary, that—

A. The State has implemented the uniform administrative requirements referred to in section 184(a)(3);

B. The State has annually monitored local areas to ensure compliance with the uniform administrative requirements as required under section 184(a)(4); and

C. The State has taken appropriate action to secure compliance pursuant to section 184(a)(5). (§ 184(a)(6))

4. The State assures that the adult and youth funds received under the Workforce Investment Act will be distributed equitably throughout the State, and that no local areas will suffer significant shifts in funding from year to year during the period covered by this plan. (§ 112(b)(12)(B))

5. The State assures that veterans and other preference eligible persons will be afforded a priority service, in accordance with the requirements of chapter 41 of title 38 and 20 C.F.R. 1001, in the One-Stop system for the provision of labor exchange services funded under the Wagner-Peyser Act.

6. The State assures that the Governor shall, once every two years, certify one local board for each local area in the State. (§ 117(c)(2))

7. The State assures that it will comply with the confidentiality requirements of section 136(f)(3).

8. The State assures that no funds received under the Workforce Investment Act will be used to assist, promote, or deter union organizing. (§ 181(b)(7))

9. The State assures that it will comply with the nondiscrimination provisions of section 188, and its implementing regulations at 29 CFR part 37, including an assurance that a Methods of Administration has been developed and implemented (§ 188 and § 112(b)(17))

10. The State assures that it will collect and maintain data necessary to show compliance with the nondiscrimination provisions of section 188, as provided in the regulations implementing that section. (§ 185)

11. The State certifies that the Wagner-Peyser Act Plan, which is part of this document, has been certified by the State Employment Security Administrator.

12. The State assures that veterans workforce investment programs funded under WIA, Section 168 will be carried out in accordance with that section, and further assures veterans will be afforded employment and training services under WIA section 134, to the extent practicable.

13. The State certifies that Workforce Investment Act section 167 grantees, advocacy groups as described in the Wagner-Peyser Act (e.g., veterans, migrant and seasonal farmworkers, people with disabilities, UI claimants), the State monitor advocate, agricultural organizations, and employers were given the opportunity to comment on the Wagner-Peyser Act grant document for agricultural services and local office affirmative action plans and that affirmative action plans have been included for designated offices.

14. The State assures that it will comply with the annual Migrant and Seasonal Farmworker significant office requirements in accordance with 20 CFR part 653.

15. The State has developed this Plan in consultation with local elected officials, local workforce boards, the business community, labor organizations and other partners.

16. The State assures that funds will be expended in accordance with the requirements of the WIA, the Wagner-Peyser Act, chapter 41 of Title 38, the regulations implementing such laws, written guidance issued by the Department of Labor, grant agreements, and other applicable Federal laws.

17. The State Workforce Investment system and entities carrying out activities in the community who are in receipt of assistance from the workforce investment system or from the workforce investment system partners shall comply with the Architectural Barriers Act of 1968, sections 503 and 504 of the Rehabilitation Act of 1973, as amended, and the Americans with Disabilities Act of 1990.

18. The State assures to include State and local EO officers and advocates for groups protected from discrimination under WIA Section 188 in the planning process in a meaningful way, beginning with the earliest stages.

19. The State assures that it will comply with the grant procedures prescribed by the Secretary (pursuant to the authority at section 189(c) of the Act) which are necessary to enter into grant agreements for the allocation and payment of funds under the Act. The procedures and agreements will be provided to the State by the ETA Office of Grants and Contract Management and will specify the required terms and conditions and assurances and certifications, including, but not limited to, the following:

General Administrative Requirements:

- 29 CFR part 97—Uniform Administrative Requirements for State and Local Governments (as amended by the Act)
- 29 CFR part 96 (as amended by OMB Circular A–133)—Single Audit Act
- OMB Circular A–87—Cost Principles (as amended by the Act)

Assurances and Certifications:

- SF 424 B—Assurances for Nonconstruction Programs

- 29 CFR part 31, 32—Nondiscrimination and Equal Opportunity Assurance (and regulation)
- CFR part 93—Certification Regarding Lobbying (and regulation)
- 29 CFR part 98—Drug Free Workplace and Debarment and Suspension

27. The State certifies that, in providing an opportunity for public comment and input into the development of the plan, the State has consulted with persons of disabilities and has provided information regarding the plan and the planning process, including the plan and supporting documentation in alternative formats when requested. (§ 112(b)(9))

Adult Education and Family Literacy

By signing the Unified Plan signature page, you are certifying that:

1. The eligible agency will award not less than one grant to an eligible provider who offers flexible schedules and necessary support services (such as child care and transportation) to enable individuals, including individuals with disabilities, or individuals with other special needs, to participate in Adult Education and Literacy activities, which eligible provider shall attempt to coordinate with support services that are not provided under this subtitle prior to using funds for Adult Education and Literacy activities provided under AEFLA for support services. (§ 224(b)(5))

2. The funds received under this subtitle will not be expended for any purpose other than for activities under this subtitle. (§ 224(b)(6))

3. The eligible agency will expend the funds under this subtitle only in a manner consistent with fiscal requirements in section 241. (§ 224(b)(8))

Food Stamp Employment and Training (FSET)

By signing the Unified Plan signature page, you are certifying that:

1. Federal funds allocated by the Department of Agriculture to the State under section 16(h)(1) of the Food Stamp Act of 1977 (the Act), or provided to the State as reimbursements under sections 16(h)(2) and 16(h)(3) of the Act will be used only for operating an employment and training program under section 6(d)(4) of the Act.

2. The State will submit to the Food and Nutrition Service (FNS) annual updates to its Employment and Training Plan for the coming fiscal year. The updates are due by August 15 of each year. The annual update must include any changes the State anticipates making in the basic structure or operation of its program. At a minimum, the annual update must contain revisions to Tables 1 (Estimated Participant Levels), 2 (Estimated E&T Placement Levels), 4 (Operating Budget), and 5 (Funding Categories).

3. If significant changes are to be made to its E&T program during the fiscal year, the State will submit to FNS a request to modify its plan. FNS must approve the modification request before the proposed change is implemented. The State may be liable for costs associated with implementation prior to approval. See ''The Handbook on Preparing State Plans for Food Stamp Employment and Training Programs'' for additional information.

4. The State will submit a quarterly E&T report, FNS–583. Reports are due no later than 45 days after the end of each Federal fiscal quarter. The information required on the FNS–583 is listed in Exhibit 3 of the ''The Handbook on Preparing State Plans for Food Stamp Employment and Training Programs.''

5. The State will submit E&T program financial information on the SF–269, Financial Status Report. It must include claims for the 100 percent Federal grant, 50 percent matched funding, and participant reimbursements. The SF–269 is due 30 days after the end of each Federal fiscal quarter.

6. The State will deliver each component of its E&T program through the One-Stop delivery system, an interconnected strategy for providing comprehensive labor market and occupational information to job seekers, employers, core services providers, other workforce employment activity providers, and providers of workforce education activities. If the component is not available locally through such a system, the State may use another source.

Vocational Rehabilitation

By signing the Unified Plan signature page, you are certifying that:

1. As a condition for the receipt Federal funds under title I, part B of the Rehabilitation Act[3] for the provision of vocational rehabilitation services, the designated State agency[4] agrees to operate and administer the State Vocational Rehabilitation Services Program in accordance with provisions of this State plan[5], the Act and all applicable regulations[6], policies and procedures established by the Secretary. Funds made available under section 111 of the Act are used solely for the provision of vocational rehabilitation services under title I and the administration of this State plan.

2. As a condition of the receipt of Federal funds under title VI, part B of the Act for supported employment services, the designated State agency agrees to operate and administer the State Supported Employment Services Program in accordance with the provisions of the supplement to this State plan,[7] the Act, and all applicable regulations,[8] policies, and procedures established by the Secretary. Funds made available under title VI, part B are used solely for the provision of supported employment services and the administration of the supplement to the title I State plan.

3. The designated State agency or designated State unit is authorized to submit this State plan under title I of the Act and its supplement under title VI, part B of the Act.

4. The State submits only those policies, procedures, or descriptions required under this State plan and its supplement that have not been previously submitted to and approved by the Commissioner of the Rehabilitation Services Administration. (§ 101(a)(1)(B))

5. The State submits to the Commissioner at such time and in such manner as the Secretary determines to be appropriate, reports containing annual updates of the information relating to the: comprehensive system of personnel development; assessments, estimates, goals and priorities, and reports of progress; innovation and expansion activities; and requirements under title I, part B or title VI, part B of the Act. (§ 101(a)(23))

6. The State plan and its supplement are in effect subject to the submission of such modifications as the State determines to be necessary or as the Commissioner may require based on a

[3] Unless otherwise specified, any references to ''the Act'' means to the Rehabilitation Act of 1973, as amended, (Public Law 93–112, as amended by Public Laws 93–516, 95–602, 99–506, 100–630, 102–569, 103–073, and 105–220).

[4] All references in this plan to ''designated State agency'' or to ''the State agency'' relate to the agency identified in this paragraph.

[5] No funds under title I of the Act may be awarded without an approved State plan in accordance with section 101(a) of the Act and 34 CFR part 361.

[6] Applicable regulations include Education Department General Administrative Regulations (EDGAR) in 34 CFR parts 74, 76, 77, 79, 80, 81, 82, 85 and 86 and the State Vocational Rehabilitation Services Program regulations in 34 CFR part 361.

[7] No funds under title VI, part B of the Act may be awarded without an approved supplement to the title I State plan in accordance with section 625(a) of the Act.

[8] Applicable regulations include Education Department General Administrative Regulations (EDGAR) in 34 CFR parts 74, 76, 77, 79, 80, 81, 82, 85 and 86; 34 CFR part 361; and 34 CFR 363.

change in State policy, a change in Federal law, including regulations, an interpretation of the Act by a Federal court or the highest court of the State, or a finding by the Commissioner of State noncompliance with the requirements of the Act, until the State submits and receives approval of a new State plan or plan supplement. (§ 101(a)(1)(C))

7. The State has an acceptable plan for carrying out part B of title VI of the Act, including the use of funds under that part to supplement funds made available under part B of title I of the Act to pay for the cost of services leading to supported employment. (§ 101(a)(22))

8. The designated State agency, prior to the adoption of any policies or procedures governing the provision of vocational rehabilitation services under the State plan and supported employment services under the supplement to the State plan, including making any amendment to such policies and procedures, conducts public meetings throughout the State after providing adequate notice of the meetings, to provide the public, including individuals with disabilities, an opportunity to comment on the policies or procedures, and actively consults with the Director of the client assistance program, and, as appropriate, Indian tribes, tribal organizations, and Native Hawaiian organizations on the policies or procedures. (§ 101(a)(16)(A))

9. The designated State agency takes into account, in connection with matters of general policy arising in the administration of the plan, the views of individuals and groups of individuals who are recipients of vocational rehabilitation services, or in appropriate cases, the individual's representatives; personnel working in programs that provide vocational rehabilitation services to individuals with disabilities; providers of vocational rehabilitation services to individuals with disabilities; the Director of the client assistance program; and the State Rehabilitation Council, if the State has such a Council. (§ 101(a)(16)(B))

10. The designated State agency (or, as appropriate, agencies) is a State agency that is:

a. __ primarily concerned with vocational rehabilitation, or vocational and other rehabilitation, of individuals with disabilities; or

b. __ not primarily concerned with vocational rehabilitation, or vocational and other rehabilitation, of individuals with disabilities, and includes within the State agency a vocational rehabilitation bureau, or division, or other organizational unit that: is primarily concerned with vocational rehabilitation, or vocational and other rehabilitation, of individuals with disabilities, and is responsible for the designated State agency's vocational rehabilitation program; has a full-time director; has a staff, all or substantially all of whom are employed full time on the rehabilitation work of the organizational unit; and is located at an organizational level and has an organizational status within the designated State agency comparable to that of other major organizational units of the designated State agency. (§ 101(a)(2)(B))

11. The designated State agency (or, as appropriate, agencies):

a.__ is an independent commission that is responsible under State law for operating, or overseeing the operation of, the vocational rehabilitation program in the State; is consumer-controlled by persons who are individuals with physical or mental impairments that substantially limit major life activities; and represent individuals with a broad range of disabilities, unless the designated State unit under the direction of the commission is the State agency for individuals who are blind; includes family members, advocates, or other representatives, of individuals with mental impairments; and undertakes the functions set forth in § 105(c)(4) of the Act; or

b. __ has established a State Rehabilitation Council that meets the criteria set forth in section 105 of the Act and the designated State unit: jointly with the Council develops, agrees to, and reviews annually State goals and priorities, and jointly submits annual reports of progress with the Council, in accordance with the provisions of § 101(a)(15) of the Act; regularly consults with the Council regarding the development, implementation, and revision of State policies and procedures of general applicability pertaining to the provision of vocational rehabilitation services; includes in the State plan and in any revision to the State plan, a summary of input provided by the Council, including recommendations from the annual report of the Council described in section 105(c)(5) of the Act, the review and analysis of consumer satisfaction described in section 105(c)(4), and other reports prepared by the Council, and the response of the designated State unit to such input and recommendations, including explanations for rejecting any input or recommendation; and transmits to the Council all plans, reports, and other information required under this title to be submitted to the Secretary; all policies, and information on all practices and procedures, of general applicability provided to or used by rehabilitation personnel in carrying out this title; and copies of due process hearing decisions issued under this title, which shall be transmitted in such a manner as to ensure that the identity of the participants in the hearings is kept confidential. (§ 101(a)(21))

12. The State provides for financial participation, or if the State so elects, by the State and local agencies, to provide the amount of the non-Federal share of the cost of carrying out title I, part B of the Act. (§ 101(a)(3))

13. The plan is in effect in all political subdivisions of the State, except that in the case of any activity that, in the judgment of the Commissioner, is likely to assist in promoting the vocational rehabilitation of substantially larger numbers of individuals with disabilities or groups of individuals with disabilities, the Commissioner may waive compliance with the requirement that the plan be in effect in all political subdivisions of the State to the extent and for such period as may be provided in accordance with regulations prescribed by the Commissioner, but only if the non-Federal share of the cost of the vocational rehabilitation services involved is met from funds made available by a local agency (including funds contributed to such agency by a private agency, organization, or individual); and in a case in which earmarked funds are used toward the non-Federal share and such funds are earmarked for particular geographic areas within the State, the earmarked funds may be used in such areas if the State notifies the Commissioner that the State cannot provide the full non-Federal share without such funds. (§ 101(a)(4))

14. The State agency employs methods of administration found by the Commissioner to be necessary for the proper and efficient administration of the State plan. (§ 101(a)(6)(A))

15. The designated State agency and entities carrying out community rehabilitation programs in the State, who are in receipt of assistance under title I of the Act, take affirmative action to employ and advance in employment qualified individuals with disabilities covered under and on the same terms and conditions as set forth in § 503 of the Act. (§ 101(a)(6)(B))

16. Facilities used in connection with the delivery of services assisted under the State plan comply with the provisions of the Act entitled ''An Act to insure that certain buildings financed with federal funds are so designed and constructed as to be accessible to the

physically handicapped,'' approved on August 12, 1968 (commonly known as the ''Architectural Barriers Act of 1968''), with § 504 of the Act and with the Americans with Disabilities Act of 1990. (§ 101(a)(6)(C))

17. The designated State unit submits, in accordance with section 101(a)(10) of the Act, reports in the form and level of detail and at the time required by the Commissioner regarding applicants for and eligible individuals receiving services under the State plan and the information submitted in the reports provides a complete count, unless sampling techniques are used, of the applicants and eligible individuals in a manner that permits the greatest possible cross-classification of data and ensures the confidentiality of the identity of each individual. (§ 101(a)(10)(A) and (F))

18. The designated State agency has the authority to enter into contracts with for-profit organizations for the purpose of providing, as vocational rehabilitation services, on-the-job training and related programs for individuals with disabilities under part A of title VI of the Act, upon the determination by the designated State agency that such for-profit organizations are better qualified to provide such vocational rehabilitation services than non-profit agencies and organizations. (§ 101(a)(24)(A))

19. The designated State agency has cooperative agreements with other entities that are components of the statewide workforce investment system of the State in accordance with section 101(a)(11)(A) of the Act and replicates these cooperative agreements at the local level between individual offices of the designated State unit and local entities carrying out activities through the statewide workforce investment system. (§ 101(a)(11)(A) and (B))

20. The designated State unit, the Statewide Independent Living Council established under section 705 of the Act, and the independent living centers described in part C of title VII of the Act within the State have developed working relationships and coordinate their activities. (§ 101(a)(11)(E))

21. If there is a grant recipient in the State that receives funds under part C of the Act, the designated State agency has entered into a formal agreement that meets the requirements of section 101(a)(11)(F) of the Act with each grant recipient. (§ 101(a)(11)(F))

22. Except as otherwise provided in part C of title I of the Act, the designated State unit provides vocational rehabilitation services to American Indians who are individuals with disabilities residing in the State to the same extent as the designated State agency provides such services to other significant populations of individuals with disabilities residing in the State. (§ 101(a)(13))

23. No duration of residence requirement is imposed that excludes from services under the plan any individual who is present in the State. (§ 101(a)(12))

24. The designated State agency has implemented an information and referral system that is adequate to ensure that individuals with disabilities are provided accurate vocational rehabilitation information and guidance, using appropriate modes of communication, to assist such individuals in preparing for, securing, retaining, or regaining employment, and are appropriately referred to Federal and State programs, including other components of the statewide workforce investment system in the State. (§ 101(a)(20))

25. In the event that vocational rehabilitation services cannot be provided to all eligible individuals with disabilities in the State who apply for the services, individuals with the most significant disabilities, in accordance with criteria established by the State for the order of selection, will be selected first for the provision of vocational rehabilitation services and eligible individuals, who do not meet the order of selection criteria, shall have access to services provided through the information and referral system implemented under section 101)(a)(20) of the Act. (§ 101(a)(5)(C) and (D))

26. Applicants and eligible individuals, or, as appropriate, the applicants' representatives or the individuals' representatives, are provided information and support services to assist the applicants and eligible individuals in exercising informed choice throughout the rehabilitation process, consistent with the provisions of section 102(d) of the Act. (§ 101(a)(19))

27. An individualized plan for employment meeting the requirements of section 102(b) of the Act will be developed and implemented in a timely manner for an individual subsequent to the determination of the eligibility of the individual for services, except that in a State operating under an order of selection, the plan will be developed and implemented only for individuals meeting the order of selection criteria; services under this plan will be provided in accordance with the provisions of the individualized plan for employment. (§ 101(a)(9))

28. Prior to providing any vocational rehabilitation services, except:

- Assessment for determining eligibility and vocational rehabilitation needs by qualified personnel, including, if appropriate, an assessment by personnel skilled in rehabilitation technology;
- Counseling and guidance, including information and support services to assist an individual in exercising informed choice consistent with the provisions of section 102(d) of the Act;
- Referral and other services to secure needed services from other agencies through agreements developed under section 101(a)(11) of the Act, if such services are not available under this State plan;
- Job-related services, including job search and placement assistance, job retention services, follow-up services, and follow-along services;
- Rehabilitation technology, including telecommunications, sensory, and other technological aids and devices; and
- Post-employment services consisting of the services listed under subparagraphs (a) through (f), to an eligible individual, or to members of the individual's family, the State unit determines whether comparable services and benefits exist under any other program and whether those services and benefits are available to the individual unless the determination of the availability of comparable services and benefits under any other program would interrupt or delay:
- Progress of the individual toward achieving the employment outcome identified in the individualized plan for employment;
- An immediate job placement; or
- Provision of such service to any individual who is determined to be at extreme medical risk, based on medical evidence provided by an appropriate qualified medical professional.

(§ 101(a)(8)(A))

38. The Governor of the State in consultation with the designated State vocational rehabilitation agency and other appropriate agencies ensures that there is an interagency agreement or other mechanism for interagency coordination that meets the requirements of section 101(a)(8)(B)(i)-(iv) of the Act between any appropriate public entity, including the State Medicaid program, public institution of higher education, and a component of the statewide workforce investment system, and the designated State unit so as to ensure the provision of the vocational rehabilitation services identified in section 103(a) of the Act, other than the services identified as being exempt from the determination of the availability of comparable services

and benefits, that are included in the individualized plan for employment of an eligible individual, including the provision of such services during the pendency of any dispute that may arise in the implementation of the interagency agreement or other mechanism for interagency coordination. (§ 101(a)(8)(B))

39. The State agency conducts an annual review and reevaluation of the status of each individual with a disability served under this State plan who has achieved an employment outcome either in an extended employment setting in a community rehabilitation program or any other employment under section 14(c) of the Fair Labor Standards Act (29 U.S.C. 214(c)) for 2 years after the achievement of the outcome (and annually thereafter if requested by the individual or, if appropriate, the individual's representative), to determine the interests, priorities, and needs of the individual with respect to competitive employment or training for competitive employment; provides for the input into the review and reevaluation, and a signed acknowledgment that such review and reevaluation have been conducted, by the individual with a disability, or, if appropriate, the individual's representative; and makes make maximum efforts, including the identification and provision of vocational rehabilitation services, reasonable accommodations, and other necessary support services, to assist such individuals in engaging in competitive employment. (§ 101(a)(14))

40. Funds made available under title VI, part B of the Act will only be used to provide supported employment services to individuals who are eligible under this part to receive the services. (§ 625(b)(6)(A))

41. The comprehensive assessments of individuals with significant disabilities conducted under section 102(b)(1) of the Act and funded under title I will include consideration of supported employment as an appropriate employment outcome. (§ 625(b)(6)(B)

42. An individualized plan for employment, as required by section 102 of the Act, will be developed and updated using funds under title I in order to specify the supported employment services to be provided; specify the expected extended services needed; and identify the source of extended services, which may include natural supports, or to the extent that it is not possible to identify the source of extended services at the time the individualized plan for employment is developed, a statement describing the basis for concluding that there is a reasonable expectation that such sources will become available. (§ 625(b)(6)(C))

43. The State will use funds provided under title VI, part B only to supplement, and not supplant, the funds provided under title I, in providing supported employment services specified in the individualized plan for employment. (§ 625(b)(6)(D))

44. Services provided under an individualized plan for employment will be coordinated with services provided under other individualized plans established under other Federal or State programs. (§ 625(b)(6)(E))

45. To the extent jobs skills training is provided, the training will be provided on site. (§ 625(b)(6)(F))

46. Supported employment services will include placement in an integrated setting for the maximum number of hours possible based on the unique strengths, resources, priorities, concerns, abilities, capabilities, interests, and informed choice of individuals with the most significant disabilities. (§ 625(b)(G))

47. The State will expend not more than 5 percent of the allotment of the State under title VI, part B for administrative costs of carrying out this part. (§ 625(b)(7))

48. The supported employment supplement to the title I State plan contains such other information and be submitted in such manner as the Commissioner of the Rehabilitation Services Administration may require. (§ 625(b)(8))

Unemployment Insurance

The Governor, by signing the Unified Plan Signature Page, certifies that

1. The SESA will comply with the following assurances, and that the SESA will institute plans or measures to comply with the following requirements. Because the Signature Page incorporates the assurances by reference into the Unified Plan, States should not include written assurances in their Unified Plan submittal. The assurances are identified and explained in Paragraphs (2)—(11) below.

2. Assurance of Equal Opportunity (EO). As a condition to the award of financial assistance from ETA:

(a) The State assures that it will comply with the nondiscrimination provisions of section 188, and its implementing regulations at 29 CFR part 37, including an assurance that a Method of Administration has been developed and implemented (§ 188 and § 112(b)(17));

(b) The State assures that it will collect and maintain data necessary to show compliance with the nondiscrimination provisions of section 188, as provided in the regulations implementing that section (§ 185)

3. Assurance of Administrative Requirements and Allowable Cost Standards. The SESA must comply with administrative requirements and cost principles applicable to grants and cooperative agreements as specified in 20 CFR part 601 (Administrative Procedure), 29 CFR part 93 (Lobbying Prohibitions), 29 CFR part 96 (Audit Requirements), 29 CFR part 97 (Uniform Administrative Requirements for Grants and Cooperative Agreements to State and Local Governments), and OMB Circular A–87 (Revised), 60 FR 26484 (May 17, 1995), further amended at 62 FR 45934 (August 29, 1997) (Cost Principles for State, Local, and Indian Tribal Governments), and with administrative requirements for debarment and suspension applicable to subgrants or contracts as specified in 29 CFR part 98 (Debarment and Suspension). The cost of State staff travel to regional and national meetings and training sessions is included in the grant funds. It is assured that State staff will attend mandatory meetings and training sessions, or unused funds will be returned.

States that have subawards to organizations covered by audit requirements of OMB Circular A–133 (Revised) (Audit Requirements of Institutions of Higher Education and Other Non-Profits) must (1) ensure that such subrecipients meet the requirements of that circular, as applicable, and (2) resolve audit findings, if any, resulting from such audits, relating to the UI program.

(a) The SESA also assures that it will comply with the following specific administrative requirements.

(i) Administrative Requirements.

Program Income. Program income is defined in 29 CFR 97.25 as gross income received by a grantee or subgrantee directly generated by a grant supported activity, or earned only as a result of the grant agreement during the grant period. States may deduct costs incidental to the generation of UI program income from gross income to determine net UI program income. UI program income may be added to the funds committed to the grant by ETA. The program income must be used only as necessary for the proper and efficient administration of the UI program. Any rental income or user fees obtained from real property or equipment acquired with grant funds from prior awards shall be treated as program income under this grant.

Budget Changes. Except as specified by terms of the specific grant award, ETA, in accordance with the regulations, waives the requirements in 29 CFR 97.30(c)(1)(ii) that States obtain prior written approval for certain types of budget changes.

Real Property Acquired with Reed Act Funds. The requirements for real property acquired with Reed Act or other non-Federal funds and amortized with UI grants are in UIPL 39–97, dated September 12, 1997, and in 29 CFR 97.31 to the extent amortized with UI grants.

Equipment Acquired with Reed Act Funds. The requirements for equipment acquired with Reed Act or other non-Federal funds and amortized with UI grants are in UIPL 39–97, dated September 12, 1997, and in 29 CFR 97.31 to the extent amortized with UI grants.

Real Property, Equipment, and Supplies. Real property, equipment, and supplies acquired under prior awards are transferred to this award and are subject to the relevant regulations at 29 CFR part 97.

For super-microcomputer systems and all associated components which were installed in States for the purpose of Regular Reports, Benefits Accuracy Measurement, and other UI Activities, the requirements of 29 CFR part 97 apply. The National Office reserves the right to transfer title and issue disposition instructions in accordance with paragraph (g) of Federal regulations at 29 CFR 97.32. States also will certify an inventory list of system components which will be distributed annually by ETA. Standard Form 272, Federal Cash Transactions Report. In accordance with 29 CFR 97.41(c), SESAs are required to submit a separate SF 272 for each sub-account under the Department of Health and Human Services (DHHS) Payment Management System. However, SESAs are exempt from the requirement to submit the SF 272A, Continuation Sheet.

(ii). Exceptions and Expansions to Cost Principles. The following exceptions or expansions to the cost principles of OMB Circular No. A–87 (Revised) are applicable to SESAs:

—*Employee Fringe Benefits.* As an exception to OMB Circular A–87 (Revised) with respect to personnel benefit costs incurred on behalf of SESA employees who are members of fringe benefit plans which do not meet the requirements of OMB Circular No. A–87 (Revised), Attachment B, item 11, the costs of employer contributions or expenses incurred for SESA fringe benefit plans are allowable, provided that:

For retirement plans, all covered employees joined the plan before October 1, 1983; the plan is authorized by State law; the plan was previously approved by the Secretary; the plan is insured by a private insurance carrier which is licensed to operate this type of plan in the applicable State; and any dividends or similar credits because of participation in the plan are credited against the next premium falling due under the contract.

For all SESA fringe benefit plans other than retirement plans, if the Secretary granted a time extension after October 1, 1983, to the existing approval of such a plan, costs of the plan are allowable until such time as the plan is comparable in cost and benefits to fringe benefit plans available to other similarly employed State employees. At such time as the cost and benefits of an approved fringe benefit plan are equivalent to the cost and benefits of plans available to other similarly employed State employees, the time extension will cease and the cited requirements of OMB Circular A–87 (Revised) will apply. 3) For retirement plans and all other fringe benefit plans covered in (1) and (2) of this paragraph, any additional costs resulting from improvements to the plans made after October 1, 1983, are not chargeable to UI grant funds.

—*UI Claimant's Court Appeals Costs.* To the extent authorized by State law, funds may be expended for reasonable counsel fees and necessary court costs, as fixed by the court, incurred by the claimant on appeals to the courts in the following cases:

Any court appeal from an administrative or judicial decision favorable in whole or in part for the claimant;

Any court appeal by a claimant from a decision which reverses a prior decision in his/her favor;

Any court appeal by a claimant from a decision denying or reducing benefits awarded under a prior administrative or judicial decision;

Any court appeal as a result of which the claimant is awarded benefits;

Any court appeal by a claimant from a decision by a tribunal, board of review, or court which was not unanimous;

Any court appeal by a claimant where the court finds that a reasonable basis exists for the appeal.

Reed Act. Payment from the SESA's UI grant allocations, made into a State's account in the Unemployment Trust Fund for the purpose of reducing charges against Reed Act funds (Section 903(c)(2) of the Social Security Act, as amended (42 U.S.C. 1103(c)(2)), are allowable costs provided that:

The charges against Reed Act funds were for amounts appropriated, obligated, and expended for the acquisition of automatic data processing installations or for the acquisition or major renovation of State-owned real property (as defined in 29 CFR 97.3); and

With respect to each acquisition or improvement of property, the payments are accounted for as credit against equivalent amounts of Reed Act funds previously withdrawn under the respective appropriation.

Prior Approval of Equipment Purchases. As provided for in OMB Circular No. A–87 (Revised), Attachment B, item 19, the requirement that grant recipients obtain prior approval from the Federal grantor agency for all purchases of equipment (as defined in 29 CFR 97.3) is waived and approval authority is delegated to the SESA Administrator.

4. Assurance of Management Systems, Reporting, and Record Keeping. The SESA assures that:

Financial systems provide fiscal control and accounting procedures sufficient to permit timely preparation of required reports, and the tracing of funds to a level of expenditure adequate to establish that funds have not been expended improperly (29 CFR 97.20).

The financial management system and the program information system provide Federally-required reports and records that are uniform in definition, accessible to authorized Federal and State staff, and verifiable for monitoring, reporting, audit, and evaluation purposes.

It will submit reports to ETA as required in instructions issued by ETA and in the format ETA prescribes.

The financial management system provides for methods to insure compliance with the requirements applicable to procurement and grants as specified in 29 CFR Part 98 (Debarment and Suspension), and for obtaining the required certifications under 29 CFR 98.510(b) regarding debarment, suspension, ineligibility, and voluntary exclusions for lower tier covered transactions.

5. Assurance of Program Quality. The SESA assures that it will administer the UI program in a manner that ensures proper and efficient administration. ''Proper and efficient administration'' includes performance measured by ETA through Tier I measures, Tier II measures, program reviews, and the administration of the UI BAM, BTQ

measures, and TPS program requirements.

6. Assurance on Use of Unobligated Funds. The SESA assures that non-automation funds will be obligated by December 31 of the following fiscal year, and liquidated (expended) within 90 days thereafter. ETA may extend the liquidation date upon written request. Automation funds must be obligated by the end of the 3rd fiscal year, and liquidated within 90 days thereafter. ETA may extend the liquidation date upon written request. Failure to comply with this assurance may result in disallowed costs from audits or review findings.

7. Assurance of Disaster Recovery Capability. The SESA assures that it will maintain a Disaster Recovery plan.

8. Assurance of Conformity and Compliance. The SESA assures that the State law will conform to, and its administrative practice will substantially comply with, all Federal UI law requirements, and that it will adhere to DOL directives.

9. Assurance of Participation in UI PERFORMS. The SESA assures that it will participate in the annual UI PERFORMS State Quality Service Planning process by submitting: (1) any Corrective Action Plans (CAPs) required under UI PERFORMS, and (2) any Continuous Improvement Plans (CIPs) negotiated with the Department of Labor as part of the State Quality Service Planning process.

10. Assurance of Financial Reports and Planning Forms. The SESA assures that it will submit financial reports and financial planning forms as required by the Department of Labor to support the annual allocation of administrative grants.

11. Assurance of Prohibition of Lobbying Costs (29 CFR Part 93). The SESA assures and certifies that, in accordance with the DOL Appropriations Act, no UI grant funds will be used to pay salaries or expenses related to any activity designed to influence legislation or appropriations pending before the Congress of the United States. (k). Drug-Free Workplace (29 CFR Part 98). The SESA assures and certifies that it will comply with the requirements at this part.

Temporary Assistance for Needy Families (TANF)

By signing the Unified Plan signature page, you are certifying that:

1. That, during the fiscal year, the State will operate a child support enforcement program under the State plan approved under part D. (§ 402(a)(2))

2. That, during the fiscal year, the State will operate a foster care and adoption assistance program under the State plan approved under part E, and that the State will take such actions as are necessary to ensure that children receiving assistance under such part are eligible for medical assistance under the State plan under title XIX. (§ 402(a)(3))

3. Which State agency or agencies will administer and supervise the TANF program for the fiscal year, which shall include assurances that local governments and private sector organizations have been consulted regarding the plan and design of welfare services in the State so that services are provided in a manner appropriate to local populations; and have had at least 45 days to submit comments on the plan and the design of such services. (§ 402(a)(4))

4. That, during the fiscal year, the State will provide each member of an Indian tribe, who is domiciled in the State and is not eligible for assistance under a tribal family assistance plan approved under section 412, with equitable access to federally-funded assistance under the State's TANF program (§ 402(a)(5))

5. That the State has established and is enforcing standards and procedures to ensure against program fraud and abuse, including standards and procedures concerning nepotism, conflicts of interest among individuals responsible for the administration and supervision of the State program, kickbacks, and the use of political patronage. (§ 402(a)(6))

6. (Optional) that the State has established and is enforcing standards and procedures to:

- Screen and identify individuals receiving assistance under this part with a history of domestic violence while maintaining the confidentiality of such individuals;
- Refer such individuals to counseling and supportive services; and
- Waive, pursuant to a determination of good cause, other program requirements such as time limits (for so long as necessary) for individuals receiving assistance, residency requirements, child support cooperation requirements, and family cap provisions, in cases where compliance with such requirements would make it more difficult for individuals receiving assistance under this part to escape domestic violence or unfairly penalize such individuals who are or have been victimized by such violence, or individuals who are at risk of further domestic violence. (§ 402(a)(7)(A)(i), (ii), (iii)

Welfare-to-Work (WtW)

By signing the Unified Plan signature page, you are certifying that:

1. The State is an eligible State, pursuant to SSA section 402(a) for the fiscal year. (SSA § 402(a); SSA § 403(a)(5)(A)(ii)(IV))

2. The State assures that qualified State expenditures (within the meaning of SSA section 409(a)(7)) for the fiscal year will not be less than the applicable percentage of historic State expenditures (within the meaning of SSA section 409(a)(7)) with respect to the fiscal year. (SSA section 403(5)(A)(ii)(V); SSA Section 409(a)(7))

3. The State has consulted and coordinated with the appropriate entities in the substate areas regarding the plan and the design of WtW services in the State. Statutory Citation: SSA section 403(a)(5)(A)(ii)(I)(cc).

4. The State will make available to the public a summary of the WtW plan. Statutory Citation: SSA section 402(b).

5. The State has agreed to negotiate in good faith with the Secretary of Health and Human Services with respect to the substance and funding of any evaluation under SSA section 413(j) and to cooperate with the conduct of such an evaluation. (SSA § 403(a)(5)(A)(ii)(III); SSA § 413(j))

6. The State shall not use any part of these grant funds, nor any part of state expenditures made to match the funds, to fulfill any obligation of any State, political subdivision, or private industry council to contribute funds under SSA sections 403(b) or 418 or any other provision of the Social Security Act or other Federal law.

Note: There is an exception to this requirement for Access to Jobs.

Statutory Citation: SSA section 403(a)(5)(C)(vi).

7. The State will return to The Secretary of Labor any part of the WtW funds that are not expended within 3 years after the date the funds are so provided. Statutory Citation: SSA section 403(a)(5)(C)(vii).

8. The State WtW program will be conducted in accordance with the WtW legislation, regulatory provisions, future written guidance provided by the Department, and all other applicable Federal and State laws.

9. The State will apply the TANF law and regulations to the operation of the WtW program, unless otherwise specified by the Department or defined in SSA section 403(a)(5) or the applicable WtW regulations.

10. The State will provide services under the WtW grant to eligible participants only.

11. The State will maintain and submit accurate, complete and timely participant and financial records reports, as specified by the Secretary of Labor and the Secretary of Health and Human Services.

12. The State will establish a mechanism to exchange information and coordinate the WtW program operated by the State and PICs with other programs available that will assist in providing welfare recipients employment.

13. The State shall adhere to the certifications required under TANF and will meet the TANF maintenance of effort requirements.

14. The State will comply with the ''common rule'' Uniform Administrative Requirements for Grants and Cooperative Agreements to State and Local Governments codified for DOL at 29 CFR Part 97.

15. The State will follow the audit requirements of The Single Audit Act Amendments of 1996 and OMB-Circular A–133.

16. The State will follow the allowable cost/cost principles of OMB Circular A–87.

17. The State will establish policies to enforce the provisions regarding nondisplacement in work activities under a program operated with funds provided under WtW. Statutory Citation: SSA section 403(a)(5)(J)(i).

18. Assures that the Health and Safety standards established under Federal and State law otherwise applicable to working conditions of employees shall be equally applicable to working conditions of other participants engaged in a work activity under a program operated with funds provided under WtW. Statutory Citation: SSA section 403(a)(5)(J)(ii).

19. The State will enforce the provision that an individual may not be discriminated against by reason of gender with respect to participation in work activities under a program operated with funds provided under WtW. Statutory Citation: SSA section 403(a)(5)(J)(iii).

20. The State shall establish and maintain procedures for grievances or complaints from participants and employees under the WtW program. The procedures established will be consistent with the requirements of SSA section 403(a)(5)(J)(iv). Statutory Citation: SSA section 403(a)(5)(J)(iv).

21. The State shall establish and enforce standards and procedures to ensure against fraud and abuse, including standards and procedures against nepotism, conflicts of interest among individuals responsible for the administration and supervision of the State WtW program, kickbacks, and the use of political patronage.

22. The State will comply with the nondiscrimination provisions of the laws enumerated at SSA section 408(d), with respect to participation in work activities engaged in under the WtW program.

Senior Community Service Employment Program (SCSEP)

1. By signing the Unified Plan signature page, you are certifying that the State agrees to follow the provisions of Title V of the Older Americans Act of 1965 as amended or its successor legislation, the regulations at 20 CFR part 641 and Department of Labor guidance when administering funds provided pursuant to that Act.

Community Development Block Grant (CDBG)

By signing the Unified Plan signature page, you are certifying that:

1. The jurisdiction shall consult with other public and private agencies that provide assisted housing, health services, and social services during preparation of the plan. (§ 91.100(a)(1))

2. When preparing the portion of its consolidated plan concerning lead-based paint hazards, the jurisdiction shall consult with State or local health and child welfare agencies and examine existing data related to lead-based paint hazards and poisonings, including health department data on the address of housing units in which children have been identified as lead poisoned. (§ 91.100(a)(2))

3. When preparing the description of priority nonhousing community development needs, a unit of general local government must notify adjacent units of general local government, to the extent practicable. The nonhousing community development plan must be submitted to the state, and, if the jurisdiction is a CDBG entitlement grantee other than an urban county, to the county. (§ 91.100(a)(3))

4. The largest city in each eligible metropolitan statistical area (EMSA) that is eligible to receive a HOPWA formula allocation must consult broadly to develop a metropolitan-wide strategy for addressing the needs of persons with HIV/AIDS and their families living throughout the EMSA. All jurisdictions within the EMSA must assist the jurisdiction that is applying for a HOPWA allocation in the preparation of the HOPWA submission. (§ 91.100(b))

5. The jurisdiction shall consult with the local public housing agency participating in an approved Comprehensive Grant program concerning consideration of public housing needs and planned Comprehensive Grant program activities. (§ 91.100(c))

6. If HOME is part of the plan, demonstrate that rehabilitation is the primary eligible activity and ensure that this requirement is met by establishing a minimum level of rehabilitation per unit or a required ration between rehabilitation and refinancing. (§ 91.320(g)(2))

7. If HOME is part of the plan, require a review of management practices to demonstrate that disinvestment in the property has not occurred; that the long term needs of the project can be met; and that the feasibility of serving the targeted population over an extended affordability period can be demonstrated. (§ 91.320(g)(2))

8. HOME funds cannot be used to refinance multifamily loans made or insured by any Federal program, including CDBG. (§ 91.320(g)(2))

9. The State is affirmatively furthering fair housing. Each State is required to submit a certification that it will affirmatively further fair housing, which means that it will conduct an analysis to identify impediments to fair housing choice within the State, take appropriate actions to overcome the effects of any impediments identified through that analysis, and maintain records reflecting the analysis and actions in this regard. (See § 570.487(b)(2)(ii) of this title.) (§ 91.325(a)(1))

10. The State has an anti-displacement and relocation plan. The State is required to submit a certification that it has in effect and is following a residential antidisplacement and relocation assistance plan in connection with any activity assisted with funding under the CDBG or HOME programs. (§ 91.325(a)(2))

11. The State must submit a certification with regard to drug-free workplace required by 24 CFR part 24, subpart F. (§ 91.325(a)(3))

12. The State must submit a certification with regard to compliance with restrictions on lobbying required by 24 CFR part 87, together with disclosure forms, if required by that part. (§ 91.325(a)(4))

13. The State must submit a certification that the consolidated plan is authorized under State law and that the State possesses the legal authority to carry out the programs for which it is seeking funding, in accordance with applicable HUD regulations. (§ 91.325(a)(5))

14. The State must submit a certification that the housing activities to be undertaken with CDBG, HOME, ESG, and HOPWA funds are consistent with the plan. (§ 91.325(a)(6))

15. The State must submit a certification that it will comply with the acquisition and relocation requirements of the Uniform Relocation Assistance and Real Property Acquisition Policies Act of 1970, as amended, and implementing regulations at 49 CFR part 24. (§ 91.325(a)(7))

16. The State must submit a certification that it will comply with section 3 of the Housing and Urban Development Act of 1968 (12 U.S.C. 1701u), and implementing regulations at 24 CFR part 135. (§ 91.325(a)(8))

17. Community Development Block Grant program. For States that seek funding under CDBG, the following certifications are required: (§ 91.325(b)(1))

- Citizen participation. A certification that the State is following a detailed citizen participation plan that satisfies the requirements of § 91.115, and that each unit of general local government that is receiving assistance from the State is following a detailed citizen participation plan that satisfies the requirements of § 570.486 of this title.
- Consultation with local governments. A certification that: (§ 91.325(b)(2))
- It has consulted with affected units of local government in the nonentitlement area of the State in determining the method of distribution of funding;
- It engages or will engage in planning for community development activities;
- It provides or will provide technical assistance to units of general local government in connection with community development programs;
- It will not refuse to distribute funds to any unit of general local government on the basis of the particular eligible activity selected by the unit of general local government to meet its community development needs, except that a State is not prevented from establishing priorities in distributing funding on the basis of the activities selected; and
- Each unit of general local government to be distributed funds will be required to identify its community development and housing needs, including the needs of the low-income and moderate-income families, and the activities to be undertaken to meet these needs.
- Community development plan. A certification that this consolidated plan identifies community development and housing needs and specifies both short-term and long-term community development objectives that have been developed in accordance with the primary objective of the statute authorizing the CDBG program, as described in 24 CFR 570.2 * and requirements of this part and 24 CFR part 570. (§ 91.325(b)(3))

* **Note:** (§ 570.2 was removed in March, 1996. The streamlined text of § 570.1(c) has replaced 570.2.)

- Use of funds. A certification that the State has complied with the following criteria: (§ 91.325(b)(4))
- With respect to activities expected to be assisted with CDBG funds, the action plan has been developed so as to give the maximum feasible priority to activities that will benefit low- and moderate-income families or aid in the prevention or elimination of slums or blight. The plan may also include CDBG-assisted activities that are certified to be designed to meet other community development needs having particular urgency existing conditions pose a serious and immediate threat to the health or welfare of the community where other financial resources are not available to meet such needs;
- The aggregate use of CDBG funds, including section 108 guaranteed loans, during a period specified by the State, consisting of one, two, or three specific consecutive program years, shall principally benefit low- and moderate-income families in a manner that ensures that at least 70 percent of the amount is expended for activities that benefit such persons during the designated period (see 24 CFR 570.481 for definition of ''CDBG funds''); and
- The State will not attempt to recover any capital costs of public improvements assisted with CDBG funds, including Section 108 loan guaranteed funds, by assessing any amount against properties owned and occupied by persons of low- and moderate-income, including any fee charged or assessment made as a condition of obtaining access to such public improvements. However, if CDBG funds are used to pay the proportion of a fee or assessment attributable to the capital costs of public improvements (assisted in part with CDBG funds) financed from other revenue sources, an assessment or charge may be made against the property with respect to the public improvements financed by a source other than with CDBG funds. In addition, with respect to properties owned and occupied by moderate-income (but not low-income) families, an assessment or charge may be made against the property with respect to the public improvements financed by a source other than CDBG funds if the State certifies that it lacks CDBG funds to cover the assessment.

30. The grant will be conducted and administered in conformity with title VI of the Civil Rights Act of 1964 (42 U.S.C. 2000d) and the Fair Housing Act (42 U.S.C. 3601–3619) and implementing regulations. (§ 91.325(b)(5))

31. The State will require units of general local government that receive CDBG funds to certify that they have adopted and are enforcing: (§ 91.325(b)(6))

- A policy prohibiting the use of excessive force by law enforcement agencies within its jurisdiction against any individuals engaged in non-violent civil rights demonstrations; and
- A policy of enforcing applicable State and local laws against physically barring entrance to or exit from a facility or location that is the subject of such non-violent civil rights demonstrations within its jurisdiction.

34. The State will comply with applicable laws. (§ 91.325(b)(7))

35. Emergency Shelter Grant program. For States that seek funding under the Emergency Shelter Grant program, a certification is required by the State that it will ensure that its State recipients comply with the following criteria: (§ 91.325(c))

- In the case of assistance involving major rehabilitation or conversion, it will maintain any building for which assistance is used under the ESG program as a shelter for homeless individuals and families for not less than a 10-year period;
- In the case of assistance involving rehabilitation less than that covered under paragraph (d)(1) of this section, it will maintain any building for which assistance is used under the ESG program as a shelter for homeless individuals and families for not less than a three-year period;
- In the case of assistance involving essential services (including but not limited to employment, health, drug abuse, or education) or maintenance, operation, insurance, utilities and furnishings, it will provide services or shelter to homeless individuals and families for the period during which the ESG assistance is provided, without regard to a particular site or structure as long as the same general population is served;
- Any renovation carried out with ESG assistance shall be sufficient to ensure that the building involved is safe and sanitary;
- It will assist homeless individuals in obtaining appropriate supportive services, including permanent housing, medical and mental health treatment, counseling, supervision, and other services essential for achieving

independent living, and other Federal, State, local, and private assistance available for such individuals;

• It will obtain matching amounts required under § 576.71 of this title;

• It will develop and implement procedures to ensure the confidentiality of records pertaining to any individual provided family violence prevention or treatment services under any project assisted under the ESG program, including protection against the release of the address or location of any family violence shelter project except with the written authorization of the person responsible for the operation of that shelter;

• To the maximum extent practicable, it will involve, through employment, volunteer services, or otherwise, homeless individuals and families in constructing, renovating, maintaining, and operating facilities assisted under this program, in providing services assisted under the program, and in providing services for occupants of facilities assisted under the program; and

• It is following a current HUD-approved consolidated plan.

45. HOME program. Each State must provide the following certifications: (§ 91.325(d))

• If it plans to use program funds for tenant-based rental assistance, a certification that rental-based assistance is an essential element of its consolidated plan;

• A certification that it is using and will use HOME funds for eligible activities and costs, as described in Secs. 92.205 through 92.209 of this subtitle and that it is not using and will not use HOME funds for prohibited activities, as described in § 92.214 of this subtitle; and & A certification that before committing funds to a project, the State or its recipients will evaluate the project in accordance with guidelines that it adopts for this purpose and will not invest any more HOME funds in combination with other federal assistance than is necessary to provide affordable housing

1. Housing Opportunities for Persons With AIDS. For States that seek funding under the Housing Opportunities for Persons With AIDS program, a certification is required by the State that: (§ 91.325(e))

• Activities funded under the program will meet urgent needs that are not being met by available public and private sources; and

• Any building or structure purchased, leased, rehabilitated, renovated, or converted with assistance under that program shall be operated for not less than 10 years specified in the plan, or for a period of not less than three years in cases involving non-substantial rehabilitation or repair of a building or structure.

Public Housing

By signing the Unified Plan signature page, you are certifying that:

1. The plan is consistent with the applicable comprehensive housing affordability strategy for the jurisdiction in which the public housing agency is located, in accordance with title I of the Cranston-Gonzalez National Act, and contains a certification by the appropriate State or local official that the plan meets the requirements of this paragraph. (§ 5(c)(2)(B))

2. The safety of public housing residents. (§ 5A(d)(13)(A))

3. The safety and crime prevention plan shall be established in consultation with the police officer or officers in command for the appropriate precinct or police department. (§ 5A(d)(13)(B))

4. The PHA that it will carry out the public housing agency plan in conformity with title VI of the Civil Rights Act of 1964, the Fair Housing Act, section 504 of the Rehabilitation Act of 1973, and tile II of the Americans with Disabilities Act of 1990, and will affirmative further fair housing. (§ 5A(d)(15))

5. Each public housing agency shall establish 1 or more resident advisory boards in accordance with this subsection, the membership of which shall adequately reflect and represent the residents assisted by the public housing agency. (§ 5A(e)(1))

6. In developing a public housing agency plan under this section, the board of directors or similar governing body of a public housing agency shall conduct a public hearing to discuss the public housing agency plan and to invite public comment regarding that plan. The hearing shall be conducted at a location that is convenient to residents. (§ 5A(e))

7. Each significant amendment or modification with a public housing agency plan submitted to the Secretary shall consult with the resident advisory board and be consistent with comprehensive housing affordability strategies. (§ 5A(g)(2))

8. A public housing agency shall make the approved plan of the agency available to the general public. (§ 5A(i)(5))

9. The Secretary shall provide explicit written approval or disapproval, in a timely manner, for a public housing agency plan submitted by any public housing agency designate by the Secretary as a troubled public housing agency under section 6(j)(2). (§ 5A(j)(2))

10. Providing assistance under this title, a public housing agency shall comply with the rules standards, and policies established in the public housing agency plan of the public housing agency approved under H.R. 4194, section 511 (5A(l)). (§ 5A(l))

11. The state consulted with Resident Advisory Board established under Subsection (e). (§ 5A(c)(2)A)

Community Services Block Grant (CSBG)

By signing the Unified Plan signature page, you are certifying that:

1. Funds made available through the grant or allotment will be used—

• To support activities that are designed to assist low-income families and individuals, including families and individuals receiving assistance under part A of title IV of the Social Security Act (42 U.S.C. 601 *et seq.*), homeless families and individuals, migrant or seasonal farmworkers, and elderly low-income individuals and families, and a description of how such activities will enable the families and individuals—

• To remove obstacles and solve problems that block the achievement of self-sufficiency (including self-sufficiency for families and individuals who are attempting to transition off a State program carried out under part A of title IV of the Social Security Act); to secure and retain meaningful employment;

• To attain an adequate education, with particular attention toward improving literacy skills of the low-income families in the communities involved, which may include carrying out family literacy initiatives;

• To make better use of available income;

• To obtain and maintain adequate housing and a suitable living environment;

• To obtain emergency assistance through loans, grants, or other means to meet immediate and urgent family and individual needs; and

• To achieve greater participation in the affairs of the communities involved, including the development of public and private grassroots partnerships with local law enforcement agencies, local housing authorities, private foundations, and other public and private partners to—

• Document best practices based on successful grassroots intervention in urban areas, to develop methodologies for widespread replication; and strengthen and improve relationships with local law enforcement agencies, which may include participation in activities such as neighborhood or community policing efforts;

2. The needs of youth in low-income communities are being met through youth development programs that support the primary role of the family, give priority to the prevention of youth problems and crime, and promote increased community coordination and collaboration in meeting the needs of youth, and support development and expansion of innovative community-based youth development programs that have demonstrated success in preventing or reducing youth crime, such as—

- Programs for the establishment of violence-free zones that would involve youth development and intervention models (such as models involving youth mediation, youth mentoring, life skills training, job creation, and entrepreneurship programs); and
- After-school child care programs.

There is an effective use of, and to coordinate, other programs related to the purposes of this subtitle (including State welfare reform efforts).

3. There is an effective use of, and to coordinate with other programs related to the purposes of this subtitle (including State welfare reform efforts).

4. A description is provided on how the State intends to use discretionary funds made available from the remainder of the grant or allotment described in section 675C(b) in accordance with this subtitle, including a description of how the State will support innovative community and neighborhood-based initiatives related to the purposes of this subtitle.

5. Information is provided by eligible entities in the State, containing'

- A description of the service delivery system, for services provided or coordinated with funds made available through grants made under section 675C(a), targeted to low-income individuals and families in communities within the State;
- A description of how linkages will be developed to fill identified gaps in the services, through the provision of information, referrals, case management, and follow-up consultations;
- A description of how funds made available through grants made under section 675C(a) will be coordinated with other public and private resources; and
- A description of how the local entity will use the funds to support innovative community and neighborhood-based initiatives related to the purposes of this subtitle, which may include fatherhood initiatives and other initiatives with the goal of strengthening families and encouraging effective parenting;

6. Eligible entities in the State will provide, on an emergency basis, for the provision of such supplies and services, nutritious foods, and related services, as may be necessary to counteract conditions of starvation and malnutrition among low-income individuals.

7. The State and the eligible entities in the State will coordinate, and establish linkages between, governmental and other social services programs to assure the effective delivery of such services to low-income individuals and to avoid duplication of such services, and a description of how the State and the eligible entities will coordinate the provision of employment and training activities, as defined in section 101 of such Act, in the State and in communities with entities providing activities through statewide and local workforce investment systems under the Workforce Investment Act of 1998.

8. The State will ensure coordination between antipoverty programs in each community in the State, and ensure, where appropriate, that emergency energy crisis intervention programs under title XXVI (relating to low-income home energy assistance) are conducted in such community.

9. The State will permit and cooperate with Federal investigations undertaken in accordance with section 678D;

10. Any eligible entity in the State that received funding in the previous fiscal year through a community services block grant made under this subtitle will not have its funding terminated under this subtitle, or reduced below the proportional share of funding the entity received in the previous fiscal year unless, after providing notice and an opportunity for a hearing on the record, the State determines that cause exists for such termination or such reduction, subject to review by the Secretary as provided in section 678C(b).

11. The State will require each eligible entity in the State to establish procedures under which a low-income individual, community organization, or religious organization, or representative of low-income individuals that considers its organization, or low-income individuals, to be inadequately represented on the board (or other mechanism) of the eligible entity to petition for adequate representation.

12. The State will require each eligible entity in the State to establish procedures under which a low-income individual, community organization, or religious organization, or representative of low-income individuals that considers its organization, or low-income individuals, to be inadequately represented on the board (or other mechanism) of the eligible entity to petition for adequate representation.

13. The State will secure from each eligible entity in the State, as a condition to receipt of funding by the entity through a community services block grant made under this subtitle for a program, a community action plan (which shall be submitted to the Secretary, at the request of the Secretary, with the State plan) that includes a community-needs assessment for the community served, which may be coordinated with community-needs assessments conducted for other programs.

14. The State and all eligible entities in the State will, not later than fiscal year 2001, participate in the Results Oriented Management and Accountability System, another performance measure system for which the Secretary facilitated development pursuant to section 678E(b), or an alternative system for measuring performance and results that meets the requirements of that section, and a description of outcome measures to be used to measure eligible entity performance in promoting self-sufficiency, family stability, and community revitalization.

15. The information describing how the State will carry out the assurances is described in this subsection.

[FR Doc. 99–25756 Filed 10–5–99; 8:45 am]

BILLING CODE 4510–30–P

federal register

Wednesday
October 6, 1999

Part III

Department of Education

Intent To Repay to the State of Ohio Rehabilitation Services Commission Funds Recovered as a Result of a Preliminary Department Decision; Notices

DEPARTMENT OF EDUCATION

Intent To Repay to the State of Ohio Rehabilitation Services Commission Funds Recovered as a Result of a Preliminary Department Decision

AGENCY: Office of Special Education and Rehabilitative Services, Department of Education.

ACTION: Notice of intent to award grantback funds.

SUMMARY: Under section 459 of the General Education Provisions Act (GEPA), 20 U.S.C. 1234h (1994), the U.S. Secretary of Education intends to repay to the State of Ohio Rehabilitation Services Commission (ORSC), under a grantback arrangement, an amount equal to 75 percent of the principal amount of funds recovered by the U.S. Department of Education (Department) as a result of a preliminary departmental decision (PDD). This notice describes the ORSC's plan for the use of the repaid funds and the terms and conditions under which the Secretary intends to make those funds available. This notice invites comments on the proposed grantback.

DATES: We must receive your comments on or before November 5, 1999.

ADDRESSES: Address all comments about the proposed grantback to Syed M. Asghar, U.S. Department of Education, 400 Maryland Avenue, SW., room 3215, Switzer Building, Washington, DC, 20202–6132. If you prefer to send your comments through the Internet, use the following address: syed__asghar@ed.gov

FOR FURTHER INFORMATION CONTACT: Syed M. Asghar. Telephone: (202) 205–3015. If you use a telecommunications device for the deaf (TDD), you may call the Federal Information Relay Service (FIRS) at 1–800–877–8339.

Individuals with disabilities may obtain this document in an alternative format (e.g., Braille, large print, audiotape, or computer diskette) on request to the contact person listed in the preceding paragraph.

SUPPLEMENTARY INFORMATION:

A. Background

The Department has recovered $227,400 from the ORSC for claims arising from the audit conducted by the State of Ohio under the State of Ohio Single Audit covering State fiscal year 1990 (i.e., the one-year period beginning July 1, 1989 and ending June 30, 1990).

The claims involved the ORSC's administration of the State Vocational Rehabilitation (VR) Services Program (Federal Grant H126A00052). This program is authorized by the Rehabilitation Act of 1973, as amended (Act), 29 U.S.C. 701 *et seq.* The Act authorizes grants to assist States to meet the current and future needs of individuals with disabilities so that those individuals may prepare for and engage in gainful employment to the extent of their capabilities.

The June 24, 1993 PDD of the Regional Commissioner of Region V of the Rehabilitation Services Administration (RSA) found, in part, that the ORSC was required to refund $227,400 to the Department because it did not use program funds appropriately during fiscal year 1990.[1] Specifically, the ORSC used program funds to satisfy a judgment entered pursuant to a settlement agreement of a lawsuit brought against the ORSC by a former employee who claimed to have been wrongfully discharged some years earlier. The ORSC's charging of $227,400 in costs to the State Vocational Rehabilitation Services Program represented a violation of OMB Circular A–87, Attachment A, Section C(1)(a), which required that to be allowable under a grant program, costs must be necessary and reasonable. Since no services were provided by the former ORSC employee, it was determined that these costs were neither necessary nor reasonable for the VR program.

The ORSC appealed the PDD on September 30, 1993 to the U.S. Department of Education, Office of Administrative Law Judges (OALJ). In a settlement agreement between the Department and the ORSC signed on March 3, 1995, under Docket Nos. 93–76–R and 93–120–R, the parties agreed to settle all of the issues in the cases with the exception of finding #19, in 93–76–R, in the amount of $227,400, which the parties agreed to litigate. On July 14, 1995, the OALJ ruled in favor of the Department and ordered the ORSC to repay the sum of $227,400. On September 12, 1995, the OALJ's decision became the Final Decision of the Department.

The ORSC then appealed this decision to the circuit court. On November 14, 1996, the United States Court of Appeals for the Sixth Circuit ruled in favor of the Department by denying the petition filed by the ORSC (*State of Ohio, Rehabilitation Services Commission* v. *United States Department of Education.* No.95–4213, 6th Cir. 1996). As a result of this decision, the ORSC submitted payment of $227,400 to the Department in February 1997 in full settlement of all claims arising from this audit issue.

[1] This PDD, which contained several other issues of noncompliance, requested repayment of $883,517, and a second PDD requested repayment of $10,798.

On March 20, 1998, the ORSC requested a grantback of $170,550, which represents 75 percent of these recovered funds.

B. Authority for Awarding a Grantback

Section 459(a) of GEPA, 20 U.S.C. 1234h(a), provides that, whenever the Secretary has recovered funds following a PDD with respect to an applicable program, the Secretary may consider those funds to be additional funds available for the program and may arrange to repay to the grantee affected by that determination an amount not to exceed 75 percent of the recovered funds. The Secretary may enter into this grantback requested by the ORSC if the Secretary determines that the—

(a) Practices and procedures of the ORSC that resulted in the PDD have been corrected, and the State agency is, in all other respects, in compliance with the requirements of the applicable programs;

(b) ORSC has submitted to the Secretary a plan for the use of the funds to be awarded under the grantback arrangement that meets the requirements of the program and, to the extent possible, benefits the population that was affected by the failure to comply or by the misexpenditures that resulted in the PDD; and

(c) Use of funds to be awarded under the grantback arrangement in accordance with the ORSC's plan would serve to achieve the purposes of the program under which the funds were originally granted.

C. Plan for Use of Funds Awarded Under a Grantback Arrangement

Pursuant to section 459(a)(2) of GEPA, the ORSC has applied for a grantback totaling $170,550, which is 75 percent of the principal amount of the recovered funds, and has submitted a plan for use of the grantback funds. The agency will use the funds to increase field access to the automated case management system by expanding the licensing agreement from a product license for a single server to an enterprise server license. The additional user licenses are needed to handle the increased use of the product, which occurred when the ORSC implemented a new automated case management system in June 1998. This management system allows the ORSC field counselors to directly access the statewide rehabilitation computer system from remote locations, including laptop computers. According to the ORSC, this increased system access will result in more timely information processing, increased efficiency in entering Individualized Plan for Employment (IPE) and authorization

information, and a higher level of service to the ORSC consumers.

The procedural violation, which led to the judgment against the ORSC, has been corrected. In addition, the ORSC has clarified to RSA that it now has procedures in place to prohibit the use of Federal funds to satisfy any judgment resulting from employment litigation. In the years subsequent to this finding, there have been no other occurrences of a similar nature.

D. The Secretary's Determinations

The Secretary has carefully reviewed the plan submitted by the ORSC. Based upon that review, the Secretary has determined that the conditions under section 459(a) of GEPA have been met.

These determinations are based upon the best information available to the Secretary at the present time. If this information is not accurate or complete, the Secretary is not precluded from taking appropriate administrative action. In finding that the conditions of section 459(a) of GEPA have been met, the Secretary makes no determination concerning any pending audit recommendations or PDDs.

E. Notice of the Secretary's Intent To Enter Into a Grantback Arrangement

Section 459(d) of GEPA requires that, at least 30 days before entering into an arrangement to award funds under a grantback, the Secretary publish in the **Federal Register** a notice of intent to do so, and the terms and conditions under which the payment will be made.

In accordance with section 459(d) of GEPA, notice is hereby given that the Secretary intends to make funds available to the Ohio Rehabilitation Services Commission under a grantback arrangement. The grantback award would be in the amount of $170,550, which is 75 percent—the maximum percentage authorized by statute—of the principal amount recovered as a result of the PDD.

F. Terms and Conditions Under Which Payments Under a Grantback Arrangement Would Be Made

The ORSC agrees to comply with the following terms and conditions under which payments under a grantback arrangement would be made:

(a) The funds awarded under the grantback must be spent in accordance with—

(1) All applicable statutory and regulatory requirements;

(2) The plan that the ORSC submitted and any amendments to the plan that are approved in advance by the Secretary; and

(3) The budget that was submitted with the plan and any amendments to the budget that are approved in advance by the Secretary.

(b) All funds received under the grantback arrangement must be obligated by September 30, 2000, in accordance with section 459(c) of GEPA.

(c) The ORSC must, not later than January 1, 2001, submit a report to the Secretary that—

(1) Indicates that the funds awarded under the grantback have been spent in accordance with the proposed plan and any amendments that have been approved in advance by the Secretary; and

(2) Describes the results and effectiveness of the project for which the funds were spent.

(d) Separate accounting records must be maintained documenting the expenditures of funds awarded under the grantback arrangement.

(e) Before funds will be repaid pursuant to this notice, the ORSC must repay to the Department any debts that become overdue or enter into a repayment agreement for those debts.

Electronic Access to This Document

You may view this document, as well as all other Department of Education documents published in the **Federal Register**, in text or Adobe Portable Document Format (PDF) on the Internet at either of the following sites:

http://ocfo.ed.gov/fedreg.htm

http://www.ed.gov/news.html To use the PDF you just have the Adobe Acrobat Reader Program with Search, which is available free at either of the previous sites. If you have questions about using the PDF, call the U.S. Government Printing Office (GPO), toll free, at 1–888–293–6498; or in Washington, DC, area at (202) 512–1530.

Note: The official version of this document is the document published in the **Federal Register**. Free Internet access to the official edition of the **Federal Register** and the Code of Federal Regulations is available on GPO Access at:

http://www.access.gpo.gov/nara/index.html

(Catalog of Federal Domestic Assistance Number 84.126 The State Vocational Rehabilitation Services Program)

Dated: October 1, 1999.

Judith E. Heumann,

Assistant Secretary for Special Education and Rehabilitative Services.

[FR Doc. 99–26095 Filed 10–5–99; 8:45 am]

BILLING CODE 4000–01–U

federal register

Wednesday
October 6, 1999

Part IV

Department of Transportation

Federal Aviation Administration

14 CFR Part 450

Financial Responsibility Requirements for Licensed Reentry Activities; Proposed Rule

DEPARTMENT OF TRANSPORTATION

Federal Aviation Administration

14 CFR Part 450

[Docket No. FAA–1999–6265; Notice No. 99–17]

RIN 2120–AG76

Financial Responsibility Requirements for Licensed Reentry Activities

AGENCY: Federal Aviation Administration (FAA), DOT.

ACTION: Notice of proposed rulemaking (NPRM).

SUMMARY: The Commercial Space Act of 1998 (CSA) directs the FAA to establish financial responsibility requirements covering risks associated with the licensed reentry of a reentry vehicle. The FAA would determine, on an individual basis, the amount of required insurance or other form of financial responsibility after examining the risks associated with a particular reentry vehicle, its operational capabilities and designated reentry site. This proposal provides general rules for demonstrating compliance with insurance requirements and implementing statutory-based Government/industry risk sharing provisions in a manner comparable to that currently utilized for commercial launches.

DATES: Comments must be received by December 6, 1999.

ADDRESSES: Comments on this document should be mailed or delivered, in duplicate, to: U.S. Department of Transportation Dockets, Docket No. [FAA–1999–6265], 400 Seventh Street, SW., Room Plaza 401, Washington, DC 20590. Comments may be filed and examined in Room Plaza 401 between 10 a.m. and 5 p.m. weekdays, except Federal holidays. Comments also may be sent electronically to the Dockets Management System (DMS) at the following Internet address: *http://dms.dot.gov/*. Commenters who wish to file comments electronically, should follow the instructions on the DMS web site.

FOR FURTHER INFORMATION CONTACT: Ms. Esta M. Rosenberg, Attorney-Advisor, Regulations Division, Office of the Chief Counsel, Federal Aviation Administration, U.S. Department of Transportation (202) 366–9320.

SUPPLEMENTARY INFORMATION:

Comments Invited

Interested persons are invited to participate in the making of the proposed action by submitting such written data, views, or arguments, as they may desire. Comments relating to the environmental, energy, federalism, or economic impact that might result from adopting the proposals in this document also are invited. Substantive comments should be accompanied by cost estimates. Comments must identify the regulatory docket or notice number and be submitted in duplicate to the DOT Rules Docket address specified above.

All comments received, as well as a report summarizing each substantive public contact with FAA personnel concerning this proposed rulemaking, will be filed in the docket. The docket is available for public inspection before and after the comment closing date.

All comments received on or before the closing date will be considered by the Administrator before taking action on this proposed rulemaking. Comments filed late will be considered as far as possible without incurring expense or delay. The proposals in this document may be changed in light of the comments received.

Commenters wishing the FAA to acknowledge receipt of their comments submitted in response to this document must include a pre-addressed, stamped postcard with those comments on which the following statement is made: ''Comments to Docket No. FAA–1999–6265.'' The postcard will be date stamped and mailed to the commenter.

Availability of NPRMs

An electronic copy of this document may be downloaded using a modem and suitable communications software from the FAA regulations section of the FedWorld electronic bulletin board service (telephone: (703) 321–3339) and the Government Printing Office (GPO)'s electronic bulletin board service (telephone: (202) 512–1661).

Internet users may reach the FAA's web page at http://www.faa.gov/avr/arm/nprm/nprm.htm or the GPO's web page at http://www.access.gpo.gov/nara access to recently published rulemaking documents.

Any person may obtain a copy of this document by submitting a request to the Federal Aviation Administration, Office of Rulemaking, ARM–1, 800 Independence Avenue SW., Washington, DC 20591, or by calling (202) 267–9680. Washington, DC 20591, or by calling (202) 267–9680. Communications must identify the notice number or docket number of this NPRM.

Persons interested in being placed on the mailing list for future rulemaking documents should request from the above office a copy of Advisory Circular No. 11–2A, Notice of Proposed Rulemaking Distribution System, which describes the application procedure.

Background

The Commercial Space Act of 1998 (CSA), Public Law 105–303, grants new authority to the Secretary of Transportation over the licensing and regulation of reentry vehicle operators and the operation of reentry sites by a commercial or non-Federal entity. In addition to licensing launches of expendable launch vehicles and the commercial operation of launch sites, the Secretary is now authorized to license reentries and the operation of reentry sites when those activities are conducted within the United States or by U.S. citizens abroad. Statutory objectives in licensing reentry activities are to ensure that public health and safety and the safety of property are not jeopardized as a result of reentry activities and consistency with U.S. national security and foreign policy interests, including treaty obligations entered into by the United States.

Responsibility for commercial space transportation has been assigned by the Secretary of Transportation to the Administrator of the Federal Aviation Administration (FAA), who in turn has delegated regulatory and related authority over commercial space transportation to the Associate Administrator for Commercial Space Transportation (AST).

On April 21, 1999, the FAA issued proposed rules governing licensing and other regulatory requirements applicable to non-Federal reentry activities. *See* 64 FR 19626–19666. Referred to herein as the Reusable Launch Vehicle or RLV Licensing Regulations, the proposed rules explain the agency's comprehensive approach to evaluating RLV mission risk and provide additional insight into the FAA's regulatory objectives in licensing reentry. The comment period closed on July 20, 1999. Intended as a companion document to the RLV Licensing Regulations, this rulemaking elaborates upon the FAA's proposed approach to licensing launch and reentry of an RLV or other reentry vehicle. It does not reflect a final determination by the FAA on the scope and characteristics of an RLV licensing program.

In addition to granting reentry licensing authority, the CSA further amends 49 U.S.C. Subtitle IX, chapter 701, popularly referred to as the Commercial Space Launch Act of 1984 (CSLA), by extending existing requirements for financial responsibility and risk allocation to licensed reentries. In doing so, Congress has committed the

Government to share in the operational risks associated with development and use of reentry technology for commercial purposes.

Under the amendments, both the burdens of the CSLA risk allocation scheme and its benefits apply to licensed reentries. Perhaps of greatest significance to prospective reentry vehicle operators is congressional affirmation in the newly enacted legislation that the payment of excess claims (or ''indemnification'') provisions of 49 U.S.C. 70113 apply to a licensed reentry just as they do to a licensed launch. Unaffected by the Commercial Space Act of 1998, however, is the existing sunset provision that appears in 49 U.S.C. 70113(f), limiting eligibility for Government indemnification to reentries conducted under a license for which a complete and valid application has been received by the FAA by the end of 1999.[1]

On August 26, 1998, the agency issued final rules implementing CSLA financial responsibility (insurance) and risk allocation requirements for licensed launch activities. 63 FR 45592–45625. The final rules, codified at 14 CFR part 440, establish in regulations a risk-based approach, known as maximum probable loss (MPL) methodology, to determining insurance requirements. Included in part 440 are requirements for insuring loss or damage to government range property and for liability insurance providing coverage for all launch participants, including the U.S. Government, in the event of claims by a third party for damage or loss resulting from licensed launch activities. The final rules also implement statutory requirements for reciprocal waivers of claims among launch participants whereby each participant is required to waive certain claims it may have for damage or loss against each of the other launch participants and accept financial responsibility for losses suffered by its own personnel. And, in accordance with the CSLA, the final rules reflect the U.S. Government's participation in statutorily directed risk allocation through the reciprocal waiver of claims and by providing for payment of certain third party claims, subject to congressional appropriation of funds. Under the CSLA, the government may cover or ''indemnify'' third-party liability of all launch participants when liability exceeds required insurance, up to a statutory ceiling of $1.5 billion (as adjusted for inflation after January 1, 1989) above insurance.

[1] If enacted, pending legislation would extend the sunset provision an additional five to ten years.

As indicated in the financial responsibility rulemaking for licensed launch activities, the risk-sharing scheme enacted in 1988 and recently extended to cover licensed reentries benefits the aerospace industry, including customers of commercial launch and reentry services, as well as the government. The aerospace industry is relieved of the risk of catastrophic liability which would be difficult and costly, if not impossible, to manage with private insurance if each launch participant had to obtain $2 billion of coverage.[2] The government benefits from the statutory risk sharing scheme through CSLA-mandated liability coverage, up to a defined amount, which financially insulates the government from its own risk of liability exposure including liability for certain damage on the ground or to aircraft in flight when the United States is deemed a launching State under the terms of the Outer Space Treaties, specifically the Convention on International Liability Caused by Space Objects (Liability Convention, entered into force September 1972). Liability for damage caused elsewhere, such as to satellites on orbit, is also assigned to the government under the Liability Convention if it is the fault of persons for whom the launching State is responsible. In addition, under Article VI of the Treaty on Principles Governing the Activities of States in the Exploration and Use of Outer Space, including the Moon and Other Celestial Bodies (Outer Space Treaty, entered into force October 1967), the United States bears international responsibility for activities carried on in space by non-governmental entities.

Risk allocation under the CSLA contemplates the following *quid pro quo* arrangement. A launch or reentry licensee provides insurance covering the first tier of risk for all entities, including the government, involved in licensed space launch or reentry activity. In return, the government agrees to be responsible for its own liability and that of launch or reentry participants, subject to Congressional appropriation of funds, up to an additional $1.5 billion (with an adjustment for post-January 1, 1989 inflation). The commercial space transportation industry is thereby relieved of the risk of catastrophic losses within the second tier of risk (statutorily required insurance plus $1.5 billion, as adjusted for post-January 1, 1989 inflation). The third tier of risk, or claims in excess of the combined total of required insurance plus $1.5 billion (as adjusted), is the responsibility of the party adjudged by a court to be legally liable for the claims. As a regulatory matter, the agency imposes financial responsibility for the third tier of risk on the launch licensee, and in this notice proposes to do likewise with respect to a reentry operator or licensee, unless it has no liability whatsoever for such claims.

[2] The amount of $2 billion represents the amount of indemnification that may be made available to launch participants without adjusting for inflation, or $1.5 billion, added to the maximum amount of liability insurance that may be required under the terms of 49 U.S.C. 70112(a)(3)(A), or $500 million.

The COMET/METEOR Experience

The authority granted by the Commercial Space Act of 1998 (CSA) is the culmination of several years of Administration effort to grant specific licensing authority to the Department of Transportation over reentry of a reentry vehicle. The agency's efforts began in 1993, when its evaluation of the COMET reentry vehicle highlighted the limitations of the CSLA in keeping pace with advancements in technology.

COMET, or the Commercial Experiment Transporter, began as a commercial program administered through the National Aeronautics and Space Administration's (NASA's) Centers for the Commercial Development of Space. COMET was intended to provide a low cost, medium-term (30 day) platform in space for the conduct and return to Earth of microgravity experiments. (The COMET Program and the agency's approach to authorizing its activity are described in several **Federal Register** Notices. *See* 57 FR 10213, March 24, 1992; 57 FR 55021, November 23, 1992; and 60 FR 39476, August 2, 1995.) Initially, three operators were involved and required agency regulatory oversight with respect to public safety-related operations. EER Systems, Inc., was responsible for placing in orbit the COMET reentry vehicle system, known as the Freeflyer, using a Conestoga expendable launch vehicle. Westinghouse Electric Corporation was responsible for operation of the service module, the component of the Freeflyer that would remain operational while on orbit for an additional 180-day period. Upon command from Earth, the Freeflyer would separate into two components and the reentry vehicle portion, designed and operated by Space Industries, Inc., would reenter Earth atmosphere targeting a designated landing site on Earth where experiments could be recovered.

Criteria utilized by the agency in evaluating reentry safety are described in a **Federal Register** Notice (57 FR 10213, March 24, 1992), and the

agency's experience in implementing the criteria is recounted in the related notice of proposed rulemaking referred to herein as the RLV Licensing Regulations. The COMET Program was terminated due to funding problems but was subsequently resurrected under a NASA contract. EER Systems, Inc. became responsible for both launch and reentry operations. Capability of the reentry vehicle system, renamed METEOR, was never demonstrated, however, because of the Conestoga launch failure which destroyed the METEOR system shortly after lift-off.

Initially, the agency's approach to the COMET Program was to license the reentry event separately from the launch event under its existing authority to license the launch of a launch vehicle on a suborbital trajectory. The determination to issue a separate license for return to Earth of the reentry vehicle was based, in large measure, on the fact that the reentry vehicle operator's identity was different from that of the launch operator, and that responsibility over the subsequent reentry (30 days following completion of the launch) ought not be imposed regulatorily on the launch operator whose responsibility for launch safety would terminate upon safing of the Conestoga expendable launch vehicle upper stage.

By letter from the House Chairman of the Subcommittee on Space to the Director of the Office of Commercial Space Transportation or OCST (the predecessor office to FAA's Associate Administrator for Commercial Space Transportation or AST), OCST was advised that it did not have explicit licensing authority over payloads but that it should continue its safety review of reentry vehicle operations associated with the launch.

In the September 2, 1992 letter, the House Subcommittee Chairman indicated that the Committee would seek legislation addressing commercial reentry vehicle licensing issues, including indemnification and liability.[3] OCST continued its evaluation of the COMET Freeflyer, and then METEOR, under its authority to evaluate missions and payloads not otherwise licensed by the Federal government, for purposes of assuring that its launch would not jeopardize public safety. In the meantime, OCST was further advised by House Subcommittee staff that claims for loss or damage resulting from reentry of the COMET reentry vehicle would not be eligible for indemnification because there was no authority to indemnify claims resulting from operation of a payload absent a clear causal nexus to the launch event. Accordingly, as a condition of NASA's contract with EER Systems for the conduct of microgravity research and experimentation services, NASA required insurance covering the government's potential liability, including that arising under the Outer Space Treaties, as a result of the reentry. The amounts of reentry liability and government property insurance established by NASA as a condition of its contract were the same requirements as OCST had ordered for the Conestoga launch using MPL methodology although OCST had not addressed reentry risk in its assessment of financial responsibility requirements for launch.

Each year since 1993, the Administration has proposed, and Congress has acted favorably upon, authorizing legislation that would allow the agency to license reentry operations and establish MPL-based insurance requirements for licensed reentries. In 1998, legislation was finally enacted authorizing the agency's regulatory responsibilities for reentry licensing and risk management.

Risk-Based Insurance

In 1995, the agency completed a study evaluating the sufficiency and applicability of CSLA financial responsibility requirements to licensed reentry operations. The study evaluated the adequacy and appropriateness of using risk-based methodology, known as maximum probable loss (MPL), in establishing liability and government property insurance requirements for reentry using a COMET-type reentry vehicle as a model. MPL has been used successfully by the agency since 1989 in determining insurance requirements for launch operations, including preparatory activities conducted at a launch site and flight of a launch vehicle. The study also evaluated whether statutory ceilings on launch insurance requirements ($500 million for liability and $100 million for government property) would be adequate for reentry operations. Finally, the study explored whether insurance capacity existed in the market to underwrite required coverages at reasonable cost.

The study's findings were favorable on all accounts. MPL methodology was determined to be appropriate and adequate for assessing reentry risk and statutory ceilings on insurance requirements were found appropriate to cover reentry risk. The study concluded that if the $500 million liability ceiling were *not* sufficient to adequately address the liability risk that attends reentry activity then perhaps the reentry proposal under review would prove too hazardous to be authorized by the agency.[4] In this manner, risk assessment functions as an indicator of acceptable risk in carrying out the agency's public safety responsibilities, as well as providing the basis for financial responsibility requirements. Whether the activity under consideration is launch or reentry, if MPL assessment would yield an unusually high value (as compared with other authorized space activities) the FAA believes it may signal the need to mitigate further the risks associated with a proposed space transportation activity before a license would be granted, to ensure that risks to public safety are confined to a reasonable level.

Reentry Technology and Reusable Launch Vehicles (RLVs)

The licensing authority granted by the Commercial Space Act of 1998 (CSA) allows for separate licensing of launch and reentry vehicle operators, as in the initial COMET proposal, but is equally applicable to reusable launch vehicle (RLV) concepts undergoing design reviews and testing protocols at the end of the 20th century.

Certain reusable or partially reusable launch vehicle concepts currently under development are reentry vehicles, as defined by the CSA; however, they bear little resemblance to the COMET/METEOR reentry vehicle evaluated by AST in the early 1990's. Whereas COMET/METEOR was to be launched as a payload and was intended to provide a microgravity platform for medium-term experimentation (30 days or more of on-orbit microgravity environment before intact reentry), the majority of reentry concepts today are intended to respond to projected growth in the telecommunications satellite services industry and other demands for lower

[3] Implicit in the House Subcommittee letter, and made explicit in congressional report language accompanying passage of the CSA (as well as predecessor legislation), is rejection by the House Committee on Science of the notion that the return to Earth of a launch vehicle on a suborbital trajectory is separately licensable as a launch under the agency's longstanding launch licensing authority.

[4] For example, assigning $3 million as the value of life used for purposes of determining maximum probable loss, as explained in the notice of proposed rulemaking regarding financial responsibility for licensed launch activities (61 FR 38992–39021, at 39007, July 25, 1996), the maximum allowable liability insurance requirement under the CSLA or $500 million, would account for an event resulting in 167 casualties, assuming no property damage. If a sufficiently probable event were associated with a reentry proposal that would result in such significant casualties it would not pass muster under the FAA's safety review and would therefore not qualify for reentry licensing.

cost access to low Earth orbit. Constellations of satellites in low Earth orbit (LEO) provide mobile telecommunications capabilities and are responsible for 71 percent of forecasted launches over the next 12 years. *See* 1999 Commercial Space Transportation Forecasts, issued by the FAA and the Commercial Space Transportation Advisory Committee (COMSTAC). Demand for such services, including replenishment of large and small LEO constellations, account for market projections of 975 to 1,195 payloads to be launched in the next 12 years. RLV concepts are targeting the anticipated surge in launch activity that will be required to maintain constellation services and intend to obtain market share by offering faster and cheaper launch services.

Reentry vehicle and RLV concepts vary widely. Some, like VentureStar, present single stage to orbit capability while others, such as Kistler Aerospace Corporation's K–1 vehicle, contemplate use of multiple stages to perform payload delivery services. Other RLV concepts, such as that under development by Kelly Aerospace, rely on aircraft technology and airborne launch-assist concepts in combination with more conventional rocket motor technologies to attain desired altitude and destination. Airborne launch systems are not new to the world of commercial aerospace launch concepts, however. The Pegasus launch system, carried aloft by a modified L–1011 aircraft, has a proven record of providing reliable expendable launch vehicle services.

RLV Launch and Reentry Financial Responsibility

Mission Approach

The RLV Licensing Regulations describe the FAA's proposal to fulfill its safety mandate in a manner that accommodates developments in RLV technology and industry needs. The FAA proposes to retain discretion to grant both launch and reentry authorizations in a single RLV mission license using a measure of safety for vehicle operations consistent with that currently employed for launches of expendable launch vehicles at Air Force ranges. Both ascent and descent flight phases must be evaluated and authorized by the FAA in accordance with FAA safety criteria for the mission; however, launch and reentry authorizations or licenses may be combined in a single license document. Application of a combined risk measure to ascent and descent flight phases of a launch vehicle reflects the FAA's determination that the public should not be exposed to greater safety risk in accomplishing a round-trip mission using an RLV to place a payload in orbit. Nor should the public be exposed to greater risk by virtue of the vehicle's ability to achieve Earth orbit or outer space before landing on Earth. *See* 64 FR at 19631. The FAA's proposed mission approach to licensing an RLV operator is explained in detail in the proposed RLV Licensing Regulations issued for public comment on April 21, 1999. *See* 64 FR 19626–19666.

Occurrences during both launch and reentry must be covered through financial responsibility provided by the licensee, up to required amounts. As amended by the CSA, 49 U.S.C. 70112(a) directs the agency to establish financial responsibility requirements that accompany a license authorizing launch or reentry, up to statutory ceilings (currently, $500 million for third party liability and $100 million for government property damage). Up to $500 million of liability insurance may therefore be required for launch of an RLV, based upon the FAA's determination of the maximum probable loss that may result from launch, as well as up to $500 million of liability insurance to cover third party liability resulting from its reentry.

The government shares in launch and reentry risks through the payment of excess claims, or so-called ''indemnification,''[5] provisions set forth in 49 U.S.C. 70113, which provide for payment by the government of claims related to a launch or reentry in excess of required insurance. In accordance with the *quid pro quo* arrangement contemplated by the statute, an RLV operator would be eligible for indemnification of excess third party claims that result during either, or both, the launch phase of licensed RLV flight and its reentry. Accordingly, it is necessary to define the scope of licensed launch activities, as distinct from licensed reentry activities, involved in an RLV mission in order to allocate risk and assign financial responsibility requirements to the appropriate phase of licensed flight and to clarify how the government is expected to share in launch or reentry risk through its indemnification responsibilities under 49 U.S.C. 70113(a).

A seamless approach to RLV mission regulation is envisioned for most of the RLV concepts currently under development and, similarly, seamless financial responsibility requirements would generally apply as well. The FAA is proposing a flexible approach to accomplishing this result. A license order may distinguish launch financial responsibility requirements from reentry financial responsibility requirements where, for example, risks presented by launch of a fully fueled vehicle differ in nature or magnitude from those presented by reentry of an RLV that has expelled all or nearly all of its explosive propellant and capability. Alternatively, the FAA may find that a uniform level of financial responsibility is sufficient to cover both launch and reentry risk, although insurance must be available to respond to claims that arise during *both* launch and reentry, up to the required amount for each phase of licensed flight.

The agency reserves authority to determine, on a case-by-case basis, whether to establish differentiated insurance requirements for RLV launch as opposed to reentry of an RLV from Earth orbit or outer space. Circumstances in which it would be appropriate to do so include launch at one site with reentry to a different site because different populations would be exposed to launch vehicle risks yielding potentially different MPL valuations. Also, the FAA understands that an RLV may be greater in size, blast capability and explosive potential during ascent than descent if it will shed stages, as would the Kistler K–1 vehicle, before achieving orbit and subsequently reentering into Earth atmosphere. Moreover, an RLV would be fully fueled for launch whereas it would have exhausted or expelled all or most of its hazardous propellants before planned landing on Earth. On the other hand, launch risks can be mitigated by ensuring that the vehicle's instantaneous impact point (the point on Earth where vehicle and debris impact would be realized in the event of a flight failure such as loss of thrust or vehicle break-up) remains over unpopulated areas or has no significant dwell time over any populated area, whereas reentry risks are, at least in some part, a function of vehicle reliability and size of the targeted landing site. (The related RLV Licensing Regulations explain the FAA's proposed requirements for assessing the adequacy and suitability of a proposed reentry site.) Where launch and reentry risks are comparable in magnitude, however, the FAA may impose parallel requirements for launch and reentry.

In any case, because an event could occur during both launch and reentry, particularly where multiple stage

[5] Commonly referred to as ''indemnification,'' the payment of excess claims provisions of 49 U.S.C. 70113 provide procedures whereby Congress may enact legislation appropriating funds to cover liability of launch participants that is in excess of the amount of insurance required under 49 U.S.C. 70112(a)(1)(A).

vehicles are used, financial responsibility must be available to respond to claims arising during either or both flight phases. Having uniform or consistent insurance requirement in place over the course of the mission is not intended to limit responsibility of the licensee to cover the liability that results from an RLV mission.

The agency requests public comment on its approach to assessing risk for RLV operations in light of the FAA's proposed mission approach to RLV licensing, that is, whether it is reasonable and prudent to separately assess and establish insurance requirements based upon launch or ascent risks as distinct from reentry or descent risks, and the circumstances, if any, under which it would be appropriate to do so. Comments are requested on whether insurance determinations that distinguish launch from reentry would hinder, rather than help, claims settlement.

Scope of RLV Launch Authorization

Financial responsibility requirements applicable to RLV launches are provided in 14 CFR Part 440, whose requirements are intended to address launch anomalies and losses resulting from a licensed launch. Losses that result from or are causally related to performance of the launch vehicle during its ascent would be addressed through part 440 requirements and eligible for indemnification under 49 U.S.C. 70113, when they exceed required launch liability insurance.

The CSA amended the definition of ''launch'' contained in the CSLA by including within its meaning ''activities involved in the preparation of a launch vehicle or payload for launch, when those activities take place at a launch site in the United States.'' 49 U.S.C. 70102(3). Incorporating this amendment, the FAA's recently issued licensing regulations define the term ''launch'' to include ''pre-flight ground operations beginning with the arrival of a launch vehicle or payload at a U.S. launch site.'' 14 CFR 401.5. *See* 64 FR 19586–19624. The RLV Licensing Regulations propose to continue use of this definition with respect to RLV launches. 64 FR at 19655.

However, the FAA has proposed a different end point, payload deployment, for purposes of defining licensed RLV launch flight from that applied to launch of an expendable launch vehicle or ELV, as described in the supplementary information accompanying the RLV Licensing Regulations. 64 FR at 19632–33.[6] (The definition of ''launch'' that appears in § 401.5 of the RLV Licensing Regulations erroneously fails to reflect the proposed change.) In the licensing regulations issued recently, the FAA reaffirmed that its safety mandate, which includes public safety and safety of property, requires that it exercise licensing authority over the launch of a launch vehicle through the point *after* payload separation when the last action occurs over which a licensee has direct or indirect control over the launch vehicle. *See* Commercial Space Transportation Licensing Regulations; Final Rule, 64 FR 19586, at 19594, April 21, 1999. For launches of expendable launch vehicles (ELVs), that point typically occurs upon ''safing'' of the vehicle's upper stage or otherwise rendering the upper stage inert so as to mitigate sufficiently the explosive potential of any remaining energy sources on board the vehicle. Defining the end of licensed launch activity in this manner minimizes the risk and consequences of collision with other orbiting space objects as well as orbital debris generation. As previously noted, the FAA's definition of ''launch'' is codified at 14 CFR 401.5.

In the RLV Licensing Regulations, the FAA has suggested using payload deployment to define the end of an RLV launch, instead of the control test applied by the FAA to define the end of an ELV launch. Reference to the licensee's last exercise of control over the launch vehicle is appropriate for ELVs but if applied to RLV technology would mean that a launch might not be concluded under the terms of the definition until reentry is complete, contrary to the CSA. Also, in order to accomplish reentry, an RLV operator would retain (or design in) certain control over the vehicle in order to ready it for reentry and energy sources would retain their explosive potential remaining capable of activation while the vehicle is on orbit. The control test is simply not appropriate for RLVs.

As discussed in the RLV Licensing Regulations, the FAA proposes instead to limit the definition of ''launch'' that appears in 14 CFR 401.5 to ELV launches and to use accomplishment of the launch phase of the mission, that is, the point of payload deployment (or attempted payload deployment), to define the end of licensed launch activities when the launch vehicle is an RLV. If adopted in final rules, this definition offers the added benefit of providing a bright line reference point for distinguishing the end of licensed launch flight from other mission phases for most RLV activities that will occur in the foreseeable future.

Scope of RLV Reentry Authorization

The CSA amends the CSLA by imposing financial responsibility requirements for RLV and other reentry vehicle reentries in a manner comparable to that required for licensed launches. Insurance or other form of financial responsibility would be required to address losses to third parties and government property resulting from a licensed reentry.

A reentry subject to FAA licensing authority means ''to return or attempt to return, purposefully, a reentry vehicle (including an RLV) and its payload, if any, from Earth orbit or from outer space to Earth.'' 49 U.S.C. 70102(10). The proposed RLV Licensing Regulations define ''reentry'' to include ''activities conducted in Earth orbit or outer space to determine reentry readiness and [that] are therefore unique to reentry and critical to ensuring public health and safety and the safety of property during reentry.'' 64 FR at 19656. The accompanying Supplementary Information further explains that licensed reentry activity would commence at the point following payload deployment when vehicle hardware and software begin to be readied for reentry. Once a payload has been deployed, RLV operations, whether designed into the vehicle or controlled from Earth, would be directed at readying the vehicle for reentry and verifying reentry readiness of structures, propulsion systems, and vehicle orientation, attitude and safety systems, including software. *See* 64 FR at 19632–33. For RLVs intended to enter outer space but not Earth orbit, and for those RLVs intended to remain on orbit for a relatively brief duration, such as days or possibly weeks, the RLV Licensing Regulations provide that the licensed reentry phase of an RLV mission would therefore commence immediately following payload deployment. In such circumstances, there would be no on orbit activity that is not covered by a license and associated statutory financial responsibility requirements. In other circumstances, such as delayed reentry by design, the FAA has requested comments in the RLV Licensing Regulations on the appropriate commencement point of reentry licensing authority from a safety perspective and now solicits public

[6] The related rulemaking addressing RLV Licensing Regulations offers detailed guidance, summarized in this Notice, on the proposed scope of licensed launch and reentry flight phases of an RLV. *See* 64 FR 19626, at 19631–19633, April 21, 1999.

comment from a financial responsibility and risk management perspective.

In proposing to include within the scope of a reentry license that period of on-orbit activity during which preparatory activities to ensure reentry readiness are conducted, the FAA considered the following: the Report of the House Committee on Science that accompanied passage of H.R. 1702, the predecessor legislation to the CSA, H. Rep. 105–347, 105th Cong., 1st Sess. (Committee Report), the scope of launch licenses for ELV launches, and reentry risks for which statutorily mandated financial responsibility and risk allocation are necessary and meaningful.

The FAA's proposed approach to defining those reentry activities that may be encompassed by a license is consistent, generally, with concerns expressed in the Committee Report. In its Report, the House Committee on Science (the Committee) indicated that ''the term 'reentry' is intended to cover a wide range of activities, including the act of returning a reusable launch vehicle to Earth. In establishing the legal framework for reentry, the Committee's approach is to treat reentry of a reentry vehicle the same as launch of a launch vehicle.'' H. Rep. 105–347, 105th Cong., 1st Sess., at 21. The Committee further noted that ''for purposes of the license requirement, reentry begins when the vehicle is prepared specifically for reentry. By way of definition, the Committee intends the term to apply to that phase of the overall space mission during which the reentry is intentionally initiated. Although this may vary slightly from system to system, as a general matter the Committee expects reentry to begin when the vehicle's attitude is oriented for propulsion firing to place the vehicle on its reentry trajectory.'' *Id.* Specifically excluded from the intended scope of FAA licensing authority over reentry would be transportation events in space that are wholly unrelated to launch or reentry, such as maneuvers between orbits, according to the Committee Report. *Id.* at 22–23.

As reflected in the RLV Licensing Regulations and summarized here, the FAA also finds in the Committee's expansive definition of the term ''launch'' guidance that is useful and instructive in delimiting ''that phase of the overall space mission during which the reentry is intentionally initiated'' and to which FAA reentry licensing authority and associated financial responsibility requirements are intended to apply. *Id.* at 21. The Committee Report defines the term ''launch'' for purposes of license coverage to include activities preceding flight that entail critical preparatory steps to initiating flight, are unique to space launch and are so hazardous as to warrant agency regulatory oversight, as long as they are conducted at a launch site in the United States, even if that site is not ultimately the site of the actual launch. *Id.* at 22. Safety concerns over the hazardous nature of such activities underlie the Committee's rationale for extending the term ''launch'' to include them. To fully comprehend such activities within the scope of a launch license and to ensure fulfillment of the FAA's statutory mandate regarding public safety and safety of property, the FAA recently issued final rules defining ''launch'' to include activities involved in the preparation of a launch vehicle for flight when those activities take place at a launch site in the United States, commencing upon arrival of a launch vehicle or payload at a launch site.[7] 14 CFR 405.1. Arrival of a launch vehicle or its major components was selected by the agency to provide an appropriate and clear commencement point of FAA regulatory authority over a launch because that event generally signals a change in risks to public safety and property due to the hazardous nature of activities that occur thereafter.

Similarly, risks to public safety and to property, both on orbit and on Earth, change significantly as a result of RLV operation on orbit or in outer space due to heightened risk of an anomalous event that may result in on orbit collision, uncontrolled reentry, or other non-nominal or unplanned occurrence. Therefore, for safety reasons comparable to those underlying the FAA's determination that ''launch'' includes preparatory activities preceding vehicle flight, the FAA has proposed in the RLV Licensing Regulations to define ''reentry'' to include those ''activities conducted in Earth orbit or outer space to determine reentry readiness and are therefore unique to reentry and critical to ensuring public health and safety and the safety of property during reentry.'' 64 FR at 19656. The event of payload deployment appropriately marks the end of licensed launch flight and would be followed immediately thereafter by reentry activities comprehended by the FAA's licensing authority. Consistent with the FAA's approach to defining ''launch'' of a launch vehicle, the FAA approach offers a bright line demarcation between the end of licensed RLV launch flight and commencement of licensed reentry activities for purposes of clarity and consistency.

Where a licensed launch would be followed immediately by a licensed reentry, a seamless risk management program would apply to all vehicle flight. A seamless approach is therefore contemplated for those vehicles launched into outer space on a suborbital trajectory and designed to reenter from outer space without ever entering an orbital path. It would also apply to those vehicles intended to spend minimal time on orbit and subsequently reenter purposefully upon activation or initiation of a reentry system once reentry readiness has been verified. CSLA-directed financial responsibility and risk allocation would cover ascent and descent flight phases of such vehicles, including flight on orbit or in outer space in furtherance of reentry readiness. However, inter-orbit maneuvers or transfer operations that are not performed as part of launch or reentry, as defined by the FAA, are not covered by the FAA's licensing authority and are therefore not intended to be addressed through statutorily mandated financial responsibility requirements. Risks associated with those activities would remain outside the CSLA financial responsibility and risk allocation program.

Non-Nominal Reentry

The broad scope of reentry licensing authority proposed in the RLV Licensing Regulations is necessary, in the FAA's view, to fulfill the legislative purpose underlying statutorily-mandated financial responsibility in the first instance, that is, financial protection of launch participants, including the U.S. Government, in the event of an unplanned occurrence, such as a non-nominal or premature reentry, resulting in third party liability. It is also necessary to make eligibility for indemnification by the government a meaningful benefit for the RLV industry in exchange for its coverage of the government's liability exposure up to a prescribed amount, at no cost to the government.

Coverage under the CSLA financial responsibility and risk allocation scheme is co-extensive with licensed activity and also addresses proximate results or consequences of licensed activity. Liability insurance under 49 U.S.C. 70112 provides coverage for claims ''*resulting from* an activity carried out under the license; * * *''

[7] The CSA amends the statutory definition of ''launch'' by expressly including preparatory activities at a launch site; however, prior to the amendment the FAA proposed to include such activities in a regulatory definition ''launch'' in order to fulfill its safety mandate. *See* Notice of Proposed Rulemaking, ''Commercial Space Transportation Licensing Regulations,'' 62 FR 13216–13273.

(emphasis added) 49 U.S.C. 70112(a)(1). Similarly, indemnification under the CSLA becomes the government's responsibility, up to the statutorily prescribed ceiling, to the extent of excess claims ''*resulting from* an activity carried out under the license.'' (emphasis added) 49 U.S.C. 70113(a).

The FAA considers that its proposed scope of reentry licensing and related requirements for financial responsibility are appropriate and necessary to cover non-nominal reentries, including reentries that are premature or unplanned and therefore technically unauthorized.[8] Statutory requirements for assuring financial responsibility of the licensee and the associated indemnification of liabilities that result from licensed activities acknowledges that non-nominal events, including accidents, may in fact occur as a result of the extremely hazardous activities of launch or reentry. As with launch, licensed pre-flight activity conducted in preparation for vehicle flight, be it launch or reentry, creates safety risks warranting regulatory oversight by the FAA and may give rise to liability owing to its hazardous nature and attendant consequences. To adequately protect government interests, as well as to ensure financial resources exist to adequately cover launch and reentry participant liability, the FAA believes that events that precede the final initiation of reentry into Earth atmosphere, including the prospect of a non-nominal reentry, must be covered by a reentry license and associated financial responsibility and risk allocation requirements.

Non-nominal reentries may occur in a variety of ways, including premature reentry, random reentry due to a major system failure, and reentry to an alternative or abort site. Non-nominal situations that are reasonably foreseeable would be considered by the agency in licensing a planned reentry as part of the agency's safety and risk mitigation program. Similarly, a finite set of outcomes and risks that could reasonably result from on orbit operation of an RLV in anticipation of its reentry would be identified and considered in setting risk-based insurance requirements.

Non-nominal reentry does not necessarily mean uncontrolled reentry, however, although some non-nominal reentries may result in failure or inability of the operator to employ intended controls during the reentry sequence. When this situation occurs, either prematurely or at some time after a reentry attempt is aborted or perhaps abandoned, reentry may occur entirely at random, both as to time and location. For example, if under the terms of an FAA license, reentry of a reentry vehicle may only be attempted under defined circumstances (such as attainment by the vehicle of certain prescribed orbital characteristics, including attitude, system status and inclination), and the reentry licensee is unable to verify that it has satisfied the conditions necessary to conduct a licensed reentry, the licensee would be required to abort the reentry attempt because it cannot be accomplished under the safety limitations defined in the license. However, the reentry vehicle, which has been designed to return to Earth substantially intact, may reenter Earth atmosphere as a result of forces other than intentional initiation by the licensee of a reentry sequence, much like an upper stage that remains in low Earth orbit or an inactive satellite whose useful life is spent. The RLV industry has stressed to the FAA that an unplanned, uncontrolled reentry has very little chance of causing damage or harm because, as with most space debris that reenters Earth atmosphere, it would burn up due to atmospheric drag. The FAA believes that an event of this sort may result from licensed activity and is intended to be embraced by the agency's reentry licensing authority. The risk of such an event would be included in the agency's safety analysis and its consequences comprehended by statutory financial responsibility requirements and risk allocation. Alternatively, a premature reentry may occur before the vehicle is oriented properly for propulsion firing, making adherence to license terms and conditions for an authorized reentry impossible. Under the FAA's proposed approach to reentry licensing, the consequences of such an event would likewise be subject to CSLA-based financial responsibility and risk allocation because they would result from licensed activity.

Although the FAA has proposed rigid safety requirements to ensure that the public is not exposed to unreasonable risk, as explained in the related rulemaking, RLV Licensing Regulations, the possibility remains that an unplanned event could occur resulting in claims for damage or injury in excess of risk-based insurance requirements analytically assessed by the agency. Congress has determined that indemnification shall be available for licensed reentries to provide an opportunity for development of this new industry. Therefore, although the FAA does not propose to regulate on orbit activity other than to assure reentry safety, the FAA proposes to license pre-descent activities, on orbit or otherwise in outer space, commencing at the point of payload deployment from an RLV, and to require insurance for vehicle operations while on orbit in the event of premature, errant, or otherwise non-nominal reentry. Inclusion of preparatory activities within the definition of ''reentry'' is necessary for the related purposes of fulfilling the FAA's safety mandate with respect to risks to persons and property on the ground, in airspace, and on orbit, and implementing a meaningful risk management program in accordance with the CSLA.

The FAA has proposed this scope of coverage because the agency believes it is critical to the intended purpose of requiring financial responsibility and to the industry's acknowledged need for liability protection from catastrophic claims. As with licensed launch activities, financial responsibility benefits the United States by providing assured coverage for liability assumed by the government under the Outer Space Treaties, and specifically the Liability Convention, up to a required amount. Indemnification for catastrophic risks is critical to the success of the RLV industry because of the potential failure rate associated with new reentry technology.

In proposing a comprehensive approach to reentry licensing and financial responsibility, the FAA also examined alternative approaches to ensuring appropriate risk management for reentry-related risks. For example, the FAA considered how claims would be covered if there were no license in effect. In other words, if launch authorization ended upon payload deployment, and reentry authorization became effective only at the moment of intentional ignition of reentry propulsion systems, would claims resulting from a premature, non-

[8] Inclusion of the term ''purposefully'' in the definition of ''reenter'' and reentry'' clarifies that the unplanned or unintended reentry of any space object that is not a reentry vehicle, as defined by the statute, is not encompassed in the agency's licensing authority. Accordingly, sections 70112 and 70113 (CSLA risk allocation) would not apply to such events unless they are clearly and causally related to a licensed launch or reentry. The agency does not believe that use of the term ''purposefully'' is intended to necessarily exclude premature or other non-nominal reentries. It is also not intended to exclude suborbital activities from reentry licensing coverage simply because reentry occurs ballistically or through other physical forces. In the agency's view, having the intent to return a vehicle that has been designed to reenter Earth atmosphere and remain substantially intact subjects the vehicle operator to the agency's reentry licensing authority, as long as the intended point of commencement of reentry is in outer space or the vehicle has entered Earth orbit.

nominal reentry be covered by statutory financial responsibility and eligible for indemnification?

As previously noted, insurance or other form of financial responsibility is required to cover claims that *result from* an activity carried out under a launch or reentry license. 49 U.S.C. 70112(a)(1). It therefore appears from the statutory language that licensed activity must first occur before claims may be considered to be the result or consequence of that activity. Accordingly, if no license were in effect, claims that result from unlicensed activity following payload deployment and preceding the conduct of an authorized reentry would not be covered by statutory financial responsibility and risk allocation.

Nor would statutory financial responsibility coverage apply to anything that occurs as a result of a license having been issued. If that were so, and if taken to the extreme, such an interpretation could be viewed as including manufacture of a vehicle within the scope of the statutory financial responsibility and allocation of risk program, an unintended result. Likewise, mere intent to engage in licensed activity would also not satisfy the statutory requirement, in the FAA's view. The FAA remains mindful of Committee Report language indicating restricted applicability of statutory risk allocation, as follows: ''The Committee notes that these provisions (sections 70112 and 70113) apply to losses sustained as a result of licensed activities, (*i.e.*, launches and reentries) not event or activities between launch and reentry; after reentry; or uncovered before launch.'' H. Rep. 105–347, 105th Cong., 1st Sess., at 23.

In proposing the comprehensive approach reflected here, the FAA also considered whether indemnification for a premature anomalous reentry should necessarily be regarded as causally related to launch of a launch vehicle. To adopt this approach, the agency would have to conclude that but for the launch of a launch vehicle the anomalous reentry would not have occurred. However, consistent with the Committee Report, the agency does not believe that everything that follows a launch bears a sufficient causal nexus to the launch to qualify for indemnification. By corollary, not every reentry event causing damage to uninvolved persons or property should be viewed as a consequence of the launch that placed the reentry vehicle in Earth orbit or outer space. For one thing, a non-nominal reentry may take place days or months after a nominal launch. While on orbit, or as a result of the space environment, the reentry vehicle's ability to reenter as planned and the licensee's ability to conduct an authorized reentry may be impaired or prevented. It may in fact be impossible to prove the exact cause of an anomalous reentry and there may be no demonstrable relationship between performance or operation of the launch vehicle and the reentry event. In another reasonably foreseeable situation, an anomalous reentry could occur proximate in time to a perfectly nominal launch. Even if a launch anomaly affected the reentry vehicle in some manner, it may be possible, or necessary, to implement on-orbit corrections or reenter to an alternative site consistent with the authorization granted by a license. Intervening events of this nature would or could break the causal nexus that must exist between launch and subsequent damage or loss, thereby defeating eligibility for indemnification. Finally, as in the COMET situation, although it seems unlikely for RLV missions, the launch of a reentry vehicle and its subsequent reentry may be separately contracted services performed by distinct operators. Where the launch vehicle operator can prove that it has no liability for an unplanned or unauthorized reentry by another operator, there would not appear to be a sufficient causal nexus between the launch and reentry to warrant eligibility for indemnification as a *result of the launch*.

In light of these examples, the agency does not believe it prudent to inextricably tie reentry indemnification to launch. Although the ability of a reentry vehicle to reenter nominally may be impaired or degraded as a result of the natural stresses of a nominal launch or an anomalous situation occurring during launch, such circumstances should not be a necessary precondition to eligibility for indemnification in the event of an unplanned reentry in the FAA's view. Accordingly, the FAA has proposed to define reentry in a manner that accomplishes its safety mandate and assures meaningful risk allocation.

As with launch indemnification, at some point the consequences of an unplanned reentry would be sufficiently attenuated from licensed activity such that indemnification would not be available to cover resultant claims. Under those circumstances, the licensee and other reentry participants would be responsible for covering the entire liability and should make appropriate provision for doing so in their risk management programs. Absent indemnification, if a reentering object causes damage on the ground or to aircraft in flight in another country, and if the United States is liable as the launching State under the Liability Convention, there is nothing to prevent the Government from seeking contribution from the responsible entity after covering its obligations under the Outer Space Treaties.

Suborbital RLV Financial Responsibility

Not all RLVs are reentry vehicles under the statutory definition. Only those that are designed to reenter from Earth orbit or outer space substantially intact would qualify as a ''reentry vehicle.'' 49 U.S.C. 70102(13). RLVs that achieve neither Earth orbit nor outer space would be regulated in accordance with the FAA's licensing authority over launches of launch vehicles in a suborbital trajectory. As explained in greater detail in the RLV Licensing Regulations, for the most part, the distinction between launch and reentry of an RLV that is a reentry vehicle under the statutory definition and an RLV that is not a reentry vehicle makes no difference from a safety perspective inasmuch as the FAA is proposing a mission approach to licensing RLV operations. Under the RLV Licensing Regulations, a consistent measure of safety would apply to all RLV missions, whether the proposed activity would be subject to the agency's licensing authority over both launch and reentry or only its licensing authority over suborbital launches. Accordingly, if what goes up will come down, either by operational design or the laws of physics, the agency would not authorize the mission unless it concludes, in advance of the launch, that both ascent and descent of the vehicle may be accomplished in a manner that does not expose the public to unreasonable risk.

From a financial responsibility and risk management perspective, however, there is a difference between suborbital RLVs that are also reentry vehicles and those that are not. Where a suborbital RLV enters outer space, its launch and reentry would be subject to separate and distinct MPL determinations based upon the unique risks posed during each flight phase, although the FAA reserves discretion to impose a uniform requirement throughout licensed flight. Suborbitally operated RLVs that do not achieve outer space would be subject to a single determination of financial responsibility only, issued under 14 CFR part 440. The FAA requests public comment on this proposed distinction in financial responsibility requirements.

Reentry Vehicle Financial Responsibility

Not all reentry vehicle operations will be performed by RLVs. A COMET-type reentry vehicle may be developed for purposes of operating in space and subsequent reentry. The Committee Report is particularly instructive regarding the extent of FAA licensing authority over launch and reentry of a reentry vehicle that is not an RLV, such as the COMET/METEOR. The COMET/METEOR reentry vehicle was intended to remain on orbit for 30 days before its reentry would be initiated, unlike the rapid turn-around concepts currently under development for RLVs. FAA reentry licensing would be required to authorize reentry of such vehicles but not its on orbit operation, consistent with the Committee Report, and risk allocation under the CSLA would be similarly restricted to its launch and reentry and would not cover events or activities between launch and reentry.

Reentry of reentry vehicles that are not RLVs, like COMET/METEOR, may occur significantly after a launch has been concluded and unlicensed on orbit operations have occurred. Operators of reentry vehicles designed to perform on orbit operations and maneuvers independent of launch and reentry would not have the benefit of seamless financial responsibility coverage under the CSLA and must be prepared to manage liability risk entirely through private insurance. Similarly, claims that result from unlicensed activity on orbit would not be eligible for indemnification under the CSLA and therefore remain the ultimate responsibility of the operator and participants in such activities.[9] The Committee Report suggests that reentry licensing coverage would commence for such vehicles when they are prepared specifically for reentry, such as when attitude is oriented for propulsion firing to place a vehicle on its reentry trajectory. *Id.* at 21. For purposes of ensuring meaningful implementation of the statutory financial responsibility and risk allocation regime, comments are requested on the appropriate commencement point of licensed activities for reentry vehicles that are not RLVs.

Section-by-Section Analysis

The FAA proposes to issue financial responsibility regulations for licensed reentry activities in a form that, for the most part, parallels regulations governing financial responsibility for licensed launch activities (14 CFR part 440 or part 440). The reason for doing so is practicality, not expediency. Principles of fairness, logic and consistency suggest that the FAA attach financial responsibility and risk allocation requirements to reentry, including the descent phase of an RLV mission, in a manner consistent with that applied to launches. For purposes of soliciting public comment on reentry financial responsibility, the FAA proposes a new part substantially mirroring part 440 requirements instead of adding reentry coverage to part 440. The FAA reserves discretion to merge the two parts in a final rule, however. Doing so would not represent a substantive change from the proposed approach and would not result in a second comment period.

The FAA also will reserve discretion to establish uniform launch and reentry financial responsibility requirements for an authorized RLV mission and separate insurance requirements for launch as distinct from reentry when a basis for doing so is identified. Factors that may make it appropriate to distinguish launch risk from reentry risk for financial responsibility purposes include disparity between launch and reentry MPL values, different vehicle operators for launch and reentry, and sufficient separation between launch and reentry functions such that risks are sufficiently independent of one another for risk management and insurance purposes. Launch MPL may be vastly different from reentry MPL if, for example, the launch site is in an unpopulated area with no population overflight contemplated and return to the designated reentry site involves some population overflight, or if launch risks include significant explosive potential while reentry risks involve very little risk of break up or explosion, or if launch involves toxic propellants and reentry would occur with little or no propellant remaining on board the vehicle.

To facilitate the FAA's ability to impose either uniform insurance requirements for all flight phases of an RLV mission or differentiated requirements to correspond to flight phase risks, the FAA finds it prudent to propose reentry financial responsibility requirements parallel in structure to those contained in 14 CFR part 440. Although launch and reentry insurance requirements may, under certain circumstances, be differentiated in the license, the FAA reiterates that a single license is envisioned combining the launch and reentry authorizations required for the conduct of an RLV mission.

By proposing a new part 450, the FAA intends to apply to reentry the principles of financial responsibility and risk allocation established in 14 CFR part 440. The interested public is directed to the rulemaking activity associated with issuance of final rules governing financial responsibility for licensed launch activities for discussion and thorough analysis by the FAA of those principles. *See* Notice of Proposed Rulemaking (NPRM), Financial Responsibility Requirements for Licensed Launch Activities, 61 FR 38992–39021, issued July 25, 1996, and Final Rule, 63 FR 45992–45625, issued August 26, 1998 (referred to herein as part 440 Final Rule). Both documents are available by accessing the FAA's web site at http://www.ast.faa.gov. Persons unfamiliar with requirements for liability insurance coverage, reciprocal waivers of claims, and distinctions established by the FAA between private party launch participants (PPLPs), Government launch participants (GLPs), and the employees of each, involved in licensed activities, among other things, should refer to the part 440 rulemaking in assessing this proposal and submitting comments.

Highlighted in the discussion below are the unique characteristics of financial responsibility and risk allocation when considered in the context of a licensed reentry or RLV mission.

Section 450.1—Scope of Part; Basis

Section 450.1 identifies authorized reentry activities as the subject of the notice. A licensed operator of a reusable launch vehicle subject to the FAA's reentry licensing authority would be subject to financial responsibility requirements covering launch and reentry and must therefore satisfy both part 440 and part 450 requirements. These requirements may be combined in a single license order.

Section 450.3—Definitions

Section 450.3 proposes to define regulatory terms in a manner consistent with 14 CFR part 440.

Certain terms defined in 14 CFR 440.3 refer to entities or persons involved in licensed launch activities or launch services for such activities. Persons or

[9] The United States accepts fault-based liability as a launching State under the Liability Convention for damage to another launching State's on orbit space object if the damage is the fault of the government or persons for whom the United States is responsible. Liability Convention, Article III. Absent a clear causal nexus to a licensed launch or reentry, statutory risk allocation provisions, including indemnification, would not apply to cover liability of launch or reentry participants to third parties for on orbit damage. Where the statute does not apply, the government may fulfill its treaty obligations and seek contribution from those entities at fault for the damage.

entities involved in licensed launch activities or launch services are identified as such in § 440.3 ''definitions'' because they obtain a certain status under the part 440 regulations, including that of additional insured or participant in the reciprocal waiver of claims agreement required for licensed launch activities. Where a licensed reentry will follow a licensed launch, as in the conduct of an RLV mission that achieves Earth orbit or outer space, the FAA believes that persons and entities involved in *either* flight phase may be potential defendants in the event of third-party claims for injury, damage or loss, arising out of the mission, regardless of when the claim arises. That is, participants in the launch phase may be potential defendants in the event of claims resulting from an errant reentry and insurance covering their liability exposure to third parties must also be provided. Similarly, claims for damage or loss may arise among launch and reentry participants and a comprehensive inter-party waiver of claims encompassing launch and reentry participants is proposed in this notice to minimize the universe of claims for which CSLA-based insurance must be provided. Accordingly, the proposed regulations are designed to ensure that participants in all licensed mission flight are included within the intended embrace of financial responsibility and allocation of risk requirements during launch or ascent as well as reentry or descent. Because launch and reentry licensees for any particular mission are expected to be the same entity for the foreseeable future, this approach should be non-controversial and easy to implement.

Theoretically, any private party that is sufficiently involved as to be a named defendant in the event of litigation arising out of loss or damage to third parties would be comprehended by required coverage as a ''licensee,'' ''customer'' or ''contractor or subcontractor.'' To ensure this result, the FAA proposes to make explicit requirements for extending reentry coverage to participants involved in associated launch activities.

The definition of ''contractors and subcontractors'' in part 440 is already sufficiently broad as to comprehend entities and persons involved in licensed reentry other than a customer or the government and its agencies because it includes suppliers of property, services and component manufacturers of a launch vehicle or payload. However, unless made explicit, it is not sufficiently clear that contractors involved in licensed reentry activity would necessarily include contractors involved in a licensed launch. The proposed definition in § 450.3(a)(2) therefore includes contractors and subcontractors involved in licensed launch activity associated with a particular reentry. Reference to contractors and subcontractors throughout the regulatory text is therefore intended to include those entities involved in licensed launch activities related to a reentry. The FAA understands that this reference may not be obvious to persons unaccustomed to FAA regulations and has endeavored to include specific reference to such entities for purposes of facilitating public comment on the proposal.

The term ''customer,'' as proposed, would also include a launch services customer as this entity may also confront liability exposure and is at risk of inter-party litigation by virtue of having procured launch vehicle services.

The term ''Government personnel'' is likewise similar to that contained in 14 CFR 440.3(a)(6), except that, for the reasons set forth above, it would also cover employees of the United States, its agencies, and its contractors and subcontractors involved in licensed launch activities associated with a particular reentry.

The term ''third party'' has been discussed at great length in the part 440 Final Rule. The interested public is referred to the discussion in 63 FR at 45597–98, and 45603–07. Under the approach outlined immediately above, involvement in either the launch or reentry phase of flight removes an entity, but not its employees, from the ''third party'' classification. Consistent with the part 440 definition of ''third party,'' employees of such entities are third parties; however, claims of employees of private party participants in a licensed reentry are intended to be addressed through reciprocal waiver of claims agreements and their employer's assumption of responsibility for such claims, as described below in the discussion of proposed § 450.17. Hence, such claims would not be covered claims for which liability insurance is required under this proposal. However, as explained in the part 440 Final Rule, claims of Government personnel, a defined term, must be covered by the licensee's liability insurance up to the required limit.

With the development of RLV technology comes the possibility of crewed or piloted launch vehicles whose operations would be subject to FAA licensing. For purposes of financial responsibility and risk allocation, the FAA regards the crew of a launch vehicle as employees of a private party launch or reentry participant (PPLP or PPRP, respectively) and therefore financial responsibility for their claims for damage, injury or loss would be addressed through reciprocal waiver of claims the same as claims of other PPLP or PPRP employees.

One additional class of persons not previously considered involves passengers who may, in the future, buy a ride on an RLV. The allure of space tourism is growing in popularity and the agency anticipates receiving launch and reentry licensing proposals for passenger-carrying space vehicles. Although it is premature to establish official FAA policy on the nature of the regulatory program that would be required to address passenger safety issues in space, the FAA is interested in the public's views on the subject and, for purposes of a future rulemaking, how passenger risk should be allocated. For example, should passengers be regarded as any other customers who are expected to waive claims against other participants for injury, damage or loss as a result of launch or reentry? Should the Government play a role in establishing limits on liability for injury to space vehicle passengers? Should indemnification be extended to cover risks of liability to passengers?

Section 450.5—General

The conduct of authorized reentry activities would be subject to compliance by the licensee with financial responsibility and risk allocation requirements. Proposed § 450.5(a) would establish in a regulation that compliance with part 450 requirements is a prerequisite to the conduct of a licensed launch involving a reentry as well as a licensed reentry.

Section 450.5(b) reflects the FAA's intent to continue its current practice of establishing required amounts of insurance in license orders, reserving the right to make necessary modifications to those requirements prior to reentry.

The FAA's need for flexibility in setting insurance amounts is intended to address changes in liability and property risks that may occur over the multi-year life of an operator license, or if more specific performance data is learned about a vehicle's performance over time to warrant reassessment of failure consequences. It is not intended as a means of shifting risk from the government to industry after vehicle flight has been initiated.

A parallel requirement to that proposed in § 450.5(b) appears in 14 CFR 440.5(b) and prompted industry concern that the FAA would vary

requirements mid-flight. Such concerns are unfounded. The FAA intends to issue and require compliance with reentry insurance requirements before launch of a reentry vehicle occurs. The FAA does not envision changed requirements once launch of an RLV or reentry vehicle occurs but before its reentry is initiated. The agency is aware that it would probably be difficult at best or prohibitively costly to obtain greater insurance coverage for reentry in the event of a launch anomaly or on-orbit situation that may affect reentry accuracy. Under either scenario, either the FAA or the licensee operating under its own procedures, may determine that a reentry attempt must be aborted on orbit if a significant threat to public safety is presented after launch of the reentry vehicle is completed, as defined in licensing regulations. A launch or on orbit failure affecting reentry risk is a reasonably foreseeable event and would be addressed through the agency's risk-based methodology for establishing insurance requirements.

As with launch financial responsibility, § 450.5(c) establishes that a reentry licensee remains responsible for liability, loss or damage sustained by the United States, even if the licensee has made an adequate demonstration of coverage under part 450, subject to four specific exceptions. The four exceptions are as follows: (1) Liability, loss or damage sustained by the United States results from willful misconduct by the United States or its agents; (2) covered third-party claims, as explained in greater detail in the discussion of proposed § 450.9, arising out of any particular reentry exceed the amount of required insurance and do not exceed $1.5 billion (as adjusted for post-January 1, 1989 inflation) above that amount and are payable under 49 U.S.C. 70113 and part 450; (3) loss or damage to government property covered under § 450.9(e) exceeds the required amount of insurance and does not result from willful misconduct of the licensee; and (4) in the event the licensee has no legal liability for claims that exceed required insurance under § 450.9(c) plus $1.5 billion (as adjusted for post-January 1, 1989 inflation).

In proposing regulations that parallel § 440.5(c) of part 440, the FAA continues to hold the licensee responsible for reentry-related liability within the third tier of risk, that is, liability in excess of the amount of risk-based insurance established by the agency plus the amount of indemnification that would be available under 49 U.S.C. 70113 if Congress appropriates funds for that purpose. Industry concerns over regulatory assignment of liability were registered and responded to by the agency in the rulemaking covering financial responsibility for licensed launch activities. *See* part 440 Final Rule, 63 FR 45592, Aug. 26, 1998. The FAA continues to maintain that the Government must have a responsible party that it can look to in the event the Government is confronted with catastrophic liability under the Outer Space Treaties and believes that it is reasonable to require participants in launch and reentry activities to absorb the cost of obtaining additional coverage for the third tier of risk. Such costs may be distributed among launch and reentry participants, including customers.

Section 450.5(d) reflects the FAA's regulatory policy that failure to comply with part 450 requirements can result in license suspension or revocation as well as civil penalty enforcement action.

Section 450.7—Determination of Maximum Probable Loss

Section 450.7 would extend, in regulations, application of maximum probable loss methodology to licensed reentry activities. The NPRM on Financial Responsibility for Licensed Launch Activities, 61 FR 38992–39021, describes in extensive detail the assumptions and risk assessment tools employed by the FAA in calculating the maximum probable loss or MPL that may reasonably be expected to result from a licensed launch. Persons interested in MPL methodology are referred to the NPRM, 61 FR at 39004–39007. Because a similar approach to reentry MPL would be utilized by the agency that explanation is not repeated here.

In summary, MPL establishes in a dollar amount the value of the maximum magnitude of loss for bodily injury or property damage that is sufficiently probable to warrant financial responsibility protection as a regulatory matter. Separate MPL studies are conducted for government property loss or damage and for third-party injury, loss or damage inclusive of government personnel as defined in § 450.3 but not inclusive of employees of other participants in licensed activity.

The FAA proposes to use the same probability thresholds of occurrence for reentry as currently apply to launch failure and accident scenarios and would establish insurance requirements for consequences falling within those threshold probabilities. They are defined in § 450.3(11).

A study conducted by the agency and issued in May 1995 confirms that use of the FAA's MPL methodology in assessing launch risk is appropriate for reentry and that the threshold probabilities of occurrence used for launch MPL would be appropriate in determining reentry MPL. The study, entitled ''Financial Responsibility for Reentry Vehicle Operations,'' considered a COMET or METEOR capsule-type of reentry vehicle, as opposed to a reusable launch vehicle; however, the FAA concludes the study's findings remain equally applicable to RLV technologies currently under the agency's consideration. In fact, enhanced maneuverability and controllability of RLVs may result in lower MPL determinations because of tighter landing footprints and the ability to compensate for errors introduced due to wind and environmental factors, among other things. The study is available on the FAA/AST home page.

An interesting observation made in the study indicates that if an MPL determination is extremely high in dollar value it may signal that the proposed activity is too risky from a public safety perspective to be authorized by the FAA and that additional risk mitigation measures may be necessary to ensure risks to the public are appropriately managed.

Contrary to current thinking, the study also assumed that because an uncontrolled reentry would not be an authorized event it was outside the scope of the MPL determination. Nevertheless, it did forecast (properly) that a reentry would not be attempted unless a determination had been made that the reentry vehicle would land within its designated landing site at a predetermined probability level. The FAA is planning to impose regulatory controls that minimize the probability of a random reentry and would examine a range of failure and accident scenarios, including any major system failures that fall within the threshold probability of occurrence, that may cause a reentry to be uncontrolled or essentially random. Accordingly, the FAA believes that application of MPL methodology to reentry will result in insurance requirements that adequately account for maximum probable reentry risks.

With respect to government property considerations in determining MPL, the NPRM on Financial Responsibility for Licensed Launch Activities (61 FR 38992, July 25, 1996) provides an elaborate discussion regarding the nature and extent of property that must be covered by government property insurance for loss or damage. In essence, all property of the government, and its contractors and subcontractors who are involved in launch or reentry services for a particular launch or reentry, at a

Federal range facility must be covered in the event of loss or damage. Government range property includes that which is located on an adjacent Federal range facility. Government property located off the Federal range facility is considered third party property because risks to such property are no greater than risk exposure of other unrelated off-site property. A licensee's liability policy is expected to respond to government claims for property loss or damage to property located off of a Federal range unless the property is involved in the licensed activity and has been specifically identified in a license as covered government property for purposes of government property insurance coverage.

Government property concerns may be less paramount for reentry than they are currently for launch because of potential use of non-Federal sites for reentry. Growing interest in RLV development has been matched by the number of non-Federal entities interested in offering authorized sites that could support RLV launch and recovery operations. The extent to which RLV developers would rely upon the safety services and facilities of Federal ranges to support vehicle reentry and recovery is not yet known, nor is the willingness of Federal range facilities to allow unproven reentry vehicles to land on their property. To the extent government range or other test assets are identified as being at risk as a result of a licensed reentry, the FAA would require government property insurance. However, the agency envisions that reentry sites may be located on private or state-owned land and that there may be no government property insurance requirement associated with a particular reentry license.

MPL methodology would be used to establish third-party liability insurance requirements for licensed reentry activities. The assessment would not take into account injury, damage or loss to those nongovernment-related entities participating in licensed reentry activities (private party reentry participants or PPRPs), including employees of those entities. Nor would it take into account injury, damage or loss to nongovernment-related entities involved in the licensed launch (private party launch participants or PPLPs) that is associated with or preceded the reentry because, as indicated above, their participation in the launch makes them sufficiently involved in a subsequent reentry as to warrant insurance coverage for their resultant liability to third parties and their participation in the reciprocal waiver scheme. As a general matter, entities participating in licensed flight would either be within the scope of required financial responsibility coverage as involved parties or outside of it as third parties, for the duration of the mission. With RLV activities, in particular, it seems difficult and probably undesirable to attempt to sever or partition, for purposes of insurance and liability, the different entities from launch or reentry risks. However, consistent with 14 CFR Part 440, Government personnel, defined as employees of the United States and its contractors and subcontractors, involved in launch or reentry services for licensed activities, are in a unique position inasmuch as they are additional insureds under the required liability insurance and are also potential claimants against the liability policy in the event they suffer personal injury, damage or loss.

Section 450.7(a), as proposed, provides that the MPL determination forms the basis of financial responsibility requirements imposed on a reentry licensee in a license order.

Consistent with 49 U.S.C. 70112(c), § 450.7(b) identifies the 90-day period in which the FAA is required to issue an MPL determination after all information required of the licensee is submitted to the FAA. As applied to launch licenses, the agency has experienced significant impediments to its ability to comply with the 90-day requirement because of the time required to obtain information from other Federal agencies and then to coordinate the results of the MPL analysis with those agencies. Factors beyond the FAA's control may affect timely issuance of an MPL determination; however, the agency will keep licensees or applicants informed of its progress and anticipated delays.

Section 450.7(c) directs applicants to Appendix A, where information requirements to support an MPL determination for licensed reentry activities are located. It also presents a procedural mechanism whereby a person requesting an MPL determination can certify the continuing accuracy and applicability of previously provided information instead of resubmitting data. Changes in data must be reported to the FAA to ensure the continuing validity of an MPL determination.

Prospective reentry licensees contemplate RLVs having rapid turn-around times. RLV developers have urged the agency not to impose regulatory obstacles, such as reissuance of MPL and insurance requirements between missions, to their goal of quick re-deployment. The FAA intends to work with prospective licensees to ensure their concerns regarding regulatory impediments do not materialize. One solution may be to suggest to applicants that they propose multiple reentry sites in applications so that a change in future reentry plans does not necessitate an additional review period, either for safety or MPL determination purposes. Of course, this approach requires much more extensive data submissions on the part of an applicant and may also slow down the review process for the agency in that it would have additional safety and risk considerations to evaluate. The FAA also intends to continue use of its operator license concept once an applicant demonstrates its qualifications and doing so should also facilitate the planned frequency of launch and reentry services envisioned by the industry.

Section 450.7(d) provides that the FAA would amend its MPL determination before completion of licensed activity if new information so indicates. As with amendment of financial responsibility requirements in general, this provision is not intended to allow the agency to alter requirements mid-flight. Rather, it provides notice to licensees that requirements may be changed, raised or lowered, when the FAA determines it is appropriate to do so on the basis of additional information learned by the agency. Insurance requirements that accompany an operator license are intended to remain in force for the life of the license, proposed as a two-year renewable term in the RLV Licensing Regulations. Section 450.7(d) provides notice that such requirements may change during the life of the license to reflect changes in risk or values.

Persons other than prospective reentry licensees may request an MPL determination for their activity and the FAA would like to accommodate requests for advisory MPL determinations, as reflected in proposed § 450.7(e). For example, a reentry site operator may request a determination. An existing reentry licensee may be contemplating a change in operations or its designated reentry site but would be unwilling to formalize its plans in a license amendment application until it knows whether those changes would significantly alter its insurance obligations and possibly its costs. Because priority would be given to actual license applications, no time limit is provided in which the agency must comply with a request for an MPL determination that is advisory in nature.

Section 450.9—Insurance Requirements for Licensed Reentry Activities

Proposed § 450.9 sets forth the two types of insurance a licensee could be required to obtain as a condition of its reentry license. Government property insurance would be required if government range or test assets would be sufficiently exposed to risk of damage or loss as a result of reentry activities. As a general matter, liability insurance would always be required to provide coverage to participants in licensed reentry activities, including licensed launch activities associated with a reentry, in the event of their legal liability to third parties, including Government personnel, for injury, damage or loss. Claims of employees of participants other than the government and its involved contractors and subcontractors are the responsibility of their employer, as explained in greater detail under the discussion of proposed § 450.17, and are not considered in the determination by the FAA of the amount of liability insurance that must be available to cover third party claims.

Section 450.9(a) provides that compliance with insurance requirements or other demonstration of financial responsibility is a requirement of a reentry license.

As directed by 49 U.S.C. 70112(a)(4), additional insureds covered by insurance are identified in proposed § 450.9(b). For a licensed reentry, the FAA would also require that additional insureds include persons and entities involved in any launch that is associated with a particular reentry because they, too, risk liability exposure as a result of their participation in licensed flight in the event of third-party loss or damage.

Proposed § 450.9(c) establishes that the amount of required liability insurance for covered third party claims is based upon the FAA's MPL determination. The amount of insurance that may be required is limited by statute to the lesser of $500 million or the maximum available on the world market at reasonable cost. The determination of reasonable cost is assigned by regulation to the FAA. Covered third party claims include claims of employees of the government and its contractors and subcontractors. Covered third party claims exclude claims of employees of other participants in a licensed reentry event or RLV mission (PPRPs), including employees of entities involved in a licensed launch (PPLPs) associated with a particular reentry. Loss or damage to government property and that of government contractors and subcontractors other than that for which government property insurance is required under § 450.9(d) would also be a covered claim under the liability insurance requirement. For example, a licensed reentry to the designated reentry site of Vandenberg Air Force Base would include, as a condition of the license, insurance covering loss or damage to government property located on Vandenberg Air Force Base. However, if the reentry vehicle misses the targeted landing point and impacts the U.S. Post Office in nearby Lompoc, California, the liability policy would be required to respond to the claim.

Requirements for government property insurance are proposed in § 450.9(d). It provides that claims by the United States, its agencies, and its contractors and subcontractors involved in licensed reentry activities, for property damage or loss at a Federal range facility that results from the licensed activity must be covered, absent willful misconduct by the government or its agents causing such damage or loss. Damage caused by a government contractor or employee must be covered by the policy. A detailed explanation of the status of government contractors and subcontractors appears in the supplementary information accompanying the part 440 Final Rule (63 FR 45592, Aug. 26, 1998) and the reader is referred to that document for further information. Government property at a Federal range facility includes property located at an adjacent Federal range facility. Cape Canaveral Air Station and Kennedy Space Center are an example of adjacent Federal range facilities.

Section 450.9(e) indicates that Government property insurance requirements are based upon MPL and are capped by statute at the lesser of $100 million or the maximum available on the world market. The regulation would leave the determination of reasonable cost to the agency.

The CSLA allows licensees to demonstrate financial responsibility in a manner other than insurance; however, the FAA's experience is that insurance is the unanimously preferred choice. Where a reentry licensee opts to use another method of demonstrating financial responsibility, the FAA would require a detailed explanation of its adequacy, as indicated in proposed § 450.9(f).

Section 450.11—Duration of Coverage; Modifications

The required duration of insurance coverage must be sufficiently broad as to cover anomalous situations that result from planned reentries. Anomalous situations may include premature reentry, delayed reentry or reentry to a contingency abort location. Accordingly, to satisfy statutory objectives, the FAA believes that it is necessary and appropriate to require that insurance coverage be available to respond to reentry-related claims, including those that arise before intentional initiation of reentry or descent flight of a reentry vehicle.

Licensed reentry activities, and as a practical matter licensed launch activities associated with a reentry, may not commence without demonstration by the licensee of financial responsibility. Consistent with the scope of a reentry license, insurance must be in effect any time licensed reentry activity takes place, including the conduct of on-orbit reentry readiness procedures and system checks, and remain in place to cover claims resulting from an errant or aborted reentry.

Under part 440 requirements, for orbital launches, launch insurance must remain in effect until the later of 30 days following payload separation or ignition of the vehicle. 14 CFR 440.11(a). As a practical matter, therefore, to the extent a reentry anomaly is proximately caused by a licensed launch, insurance would exist under part 440 to cover its consequences. However, reentry anomalies may occur wholly independent of a launch, as previously illustrated in examples. A reentry anomaly could occur after a nominal launch and, absent a causal relationship to the launch, may not be covered by launch insurance unless reentry risks are also specifically included in the policy. Also, some reentry activities may be planned to take place long after a launch has been concluded, as was the case for the COMET/METEOR Program. In such cases, insurance must be available to respond to reentry-related claims that are wholly distinct from launch-related events.

The FAA proposes to require that reentry insurance remain in place for a period of 30 days following initiation of reentry flight, with a caveat. A reentry may be aborted, leaving a vehicle remaining on orbit where it could pose risk to other space objects or reenter at some future time. A reentry vehicle that remains on orbit as a result of an aborted reentry may enter Earth atmosphere due to forces of natural orbital decay and cause harm on the surface of the Earth. It is difficult to predict, as a general matter, when such a ''natural reentry'' will occur, and in any event, it is possible that the vehicle

would burn up when it enters Earth atmosphere due to atmospheric drag effects or risk mitigation measures imposed as a condition of a reentry license.

However, reentry vehicles would be designed to withstand the rigors of reentry, at least under nominal circumstances, and therefore the FAA does not equate the risks associated with random reentry of a reentry vehicle with those associated with an expendable launch vehicle upper stage that enters Earth atmosphere. In the latter case, it is probable that the vehicle stage would burn up, although an exceptional case may occur, such as the fuel tank of a Delta II vehicle that entered Earth atmosphere through orbital decay several years ago and landed substantially intact. Risks of intact reentry presented by a random reentry of a reentry vehicle would be assessed by the FAA as part of the risk assessment performed to determine whether a reentry mission may be licensed. As a result of that assessment, the FAA believes it would be able to determine the point in time at which reentry risks are sufficiently small such that financial responsibility requirements would no longer be necessary. Accordingly, the FAA proposes to assess duration of insurance requirements for abort to orbit situations through a risk-based assessment that indicates when demonstrable risk from a random reentry is no longer of sufficient consequence as to require insurance coverage. A similar approach is used under 14 CFR 440.11(a)(3) in establishing duration of insurance for suborbital launches. As is true for launch, indemnification would be available from the first dollar of loss when insurance is no longer required, assuming other eligibility requirements are satisfied. Therefore, unlike part 440 requirements for orbital launches, the agency is not proposing a finite duration of insurance measured from a planned event, whether or not that event occurs nominally or non-nominally.

The FAA believes that its proposed approach is particularly prudent and necessary to cover the government's liability under the Outer Space Treaties, particularly the Liability Convention. Under the Liability Convention, the Government remains strictly liable for damage on the ground caused by its space object when it is a launching state.

Under proposed § 450.11(b), the FAA continues its current practice of prohibiting changes in insurance coverage, including cancellation, without 30 days notice to the FAA and approval by the agency. The FAA understands that insurers retain certain rights of cancellation in their policies; however, insurance may not be cancelled once licensed activities have commenced until the required duration of insurance has expired. This requirement is particularly important where an on orbit abort occurs and insurance would be required to remain in effect for a significant length of time.

Comments are requested on the FAA's proposed approach to ensuring financial responsibility for foreseeable reentry risks.

Section 450.13—Standard Conditions of Insurance Coverage

The FAA is proposing that insurance policies satisfy the same terms and conditions for reentry as apply to insurance policies obtained in conformance with part 440 requirements. The interested public is referred to the NPRM on Financial Responsibility Requirements for Licensed Launch Activities and the part 440 Final Rule for a detailed explanation of proposed terms. (See 61 FR at 39009–10 and 63 FR at 45614, respectively.)

Section 450.13(a)(2), as proposed, would continue the current practice of requiring that policy limits apply on a per occurrence basis.[10] This requirement has not been controversial nor has it presented difficulties in terms of industry ability to comply, to the agency's knowledge. As a practical matter, an accident that causes substantial liability or government property damage during preparatory operations at a launch site is probably one that also causes extensive damage to the launch vehicle, thereby terminating that particular launch. An accident that causes substantial liability or government property damage during flight of the vehicle is also one that terminates the launch. Accordingly, requiring coverage for the aggregate of claims on a per occurrence basis has not strained insurance capacity or raised concerns among underwriters.

At the October 1998 meeting of the Risk Management Working Group (RMWG) of the FAA's Commercial Space Transportation Advisory Committee or COMSTAC, one insurance broker noted that RLV missions present underwriting difficulties that do not exist in underwriting ELV risks. Unlike ELV missions, RLVs present opportunities for multiple occurrences during a single mission, even if one or more flight phases are accomplished successfully. For example, Kistler Aerospace Corporation utilizes a two-stage launch technology. The first stage separates and is intended to return to the launch site, while the second stage continues to orbit, enters Earth orbit, and approximately 24 hours later returns to a reentry site on Earth. A covered occurrence could take place as a result of return of the first stage to the launch site, anomalous payload deployment by the Kistler vehicle, and upon final reentry to the designated reentry site. Thus, a combination of occurrences could result in claims in excess of the aggregate limits of the policy, assuming a single policy covering launch and reentry is obtained for the entire mission. According to the broker, underwriters have expressed unwillingness to insure the uncapped liability which could result from requiring coverage on a per occurrence basis.

The FAA proposes to separate launch from reentry risk in prescribing financial responsibility for a single RLV mission. Doing so may have the added benefit of limiting the combination of occurrences that may take place during a particular flight phase and the amount of financial responsibility required to cover all such occurrences. MPL methodology would take into account the probability of multiple occurrences during a single flight phase and would reflect the aggregate value of losses that may result during each phase if multiple events are found to be sufficiently probable. Another possible approach to RLV mission financial responsibility may lead the FAA to aggregate its MPL determinations for each flight phase into an aggregate value that must be insured for the duration of an RLV mission, thereby capping liability limits of insurance, albeit at a potentially high level (although it cannot exceed $500 million or the amount available on the world market at reasonable rates for launch and for reentry). The FAA seeks public comment on possible solutions that would ensure adequate coverage is provided while not depleting insurance market capacity. In commenting on this issue, the public is reminded that under the statute, the RLV industry is expected to cover launch risk up to the maximum allowable MPL, as well as reentry risk up to the same amount. The FAA's proposed mission approach to licensing RLVs is not intended to increase financial risk to the government.

Consistent with part 440 requirements, proposed § 450.13(a)(5) would require that exclusions from

[10] Financial responsibility requirements for licensed launch activities provide that insurance policy limits must apply separately to each occurrence, and that for each occurrence, policy limits must apply to the total of claims arising out of the licensed activity in connection with any particular launch. 14 CFR 440.13(a)(2).

coverage be specified in insurance certificates submitted to the FAA as evidence of compliance with financial responsibility. Claims resulting from excluded risks that are ''usual'' are eligible for indemnification under the terms of 49 U.S.C. 70113 from the first dollar of loss, under procedures set forth in proposed § 450.19. Accordingly, the FAA requests information, in advance of the first licensed reentry, concerning the kinds of risks for which insurance is not commercially available at reasonable rates. A complete discussion of ''usual'' exclusions and the FAA's approach to addressing such exclusions is found in the part 440 Final Rule at 63 FR 45617.

Section 450.13(a)(8) appears different from its companion requirement for licensed launch activities, 14 CFR 440.13(a)(8). It addresses certain qualifications of insurers under these requirements.

Following issuance of final rules governing financial responsibility for licensed launch activities, the agency learned that a great many insurers involved in insuring aviation and aerospace risks are not licensed to do business in any State, territory, possession of the United States, or the District of Columbia, as stipulated in § 440.13(a)(8). The reason for this requirement is to assure that additional insureds under a policy can enforce legal rights against the insurer within the United States. It is not intended as a protectionist device to restrict or impede access to overseas insurance markets. The FAA has issued an Advisory Circular, AC No. 440–01, indicating that a licensee is in compliance with § 440.13(a)(8) as long as each policy of insurance contains a service of suit clause in which the insurer agrees to submit to the jurisdiction of a court of competent jurisdiction within the United States and designates an authorized agent within the United States for service of legal process on the insurer. The FAA understands that given the terms of the Advisory Circular licensees are able to comply without difficulty with the terms of § 440.13(a)(8). Accordingly, the FAA will accept as compliant with § 450.13(a)(8) insurance policies that contain a service of suit clause and designation of agent provision and this is expressly set forth in the proposed requirement in lieu of an advisory circular.

Section 450.15—Demonstration of Compliance

Under proposed § 450.15, a reentry licensee would be required to demonstrate compliance with part 450 financial responsibility and allocation of risk requirements in a manner comparable to that currently required of launch licensees under part 440.

Reentry proposals presented to the FAA as part of pre-application consultations include RLVs designed to reenter after a brief stay on orbit. Accordingly, evidence of reentry insurance must be submitted to and reviewed by the FAA in advance of the licensed launch that will place the vehicle in space. For this reason, the FAA proposes to require satisfaction of financial responsibility requirements under part 450 at the same time financial responsibility for launch is demonstrated. Timeframes for submission of proof of insurance and the required reciprocal waiver of claims and assumption of responsibility agreement under § 450.15 would therefore be the same as for licensed launches and would consist of the same elements. These include a licensee's certification of compliance with applicable license orders, filing of insurance certificates or other evidence of financial responsibility, certification that exclusions from coverage are usual and that insurance covering the excluded risks is not commercially available at reasonable rates, submission of the reciprocal waiver of claims agreement in accordance with § 450.17, and an opinion of the licensee's insurance broker that insurance obtained on behalf of the licensee complies with applicable requirements.

Section 450.17—Reciprocal Waiver of Claims Requirements and Appendix B

The Commercial Space Act of 1998 extends to reentry licensees and participants in reentry activities requirements for entering into reciprocal waivers of claims comparable to those imposed on launch licensees and participants in launch activities. The scope of required waivers for licensed launch activities and the responsibilities assumed by each signatory to a reciprocal waiver agreement are explained at length in the part 440 Final Rule (63 FR 45592, Aug. 26, 1998) and the FAA's detailed rationale need not be repeated in this document.

In summary, each participant in licensed launch or reentry activities is directed to enter into a mutual or reciprocal waiver of claims whereby each party agrees to waive claims it may have against the other participants for property damage or loss it may sustain and agrees to be responsible for property damage or loss it sustains as a result of licensed activities. Each participant is therefore foreclosed, or estopped, from asserting claims for property damage or loss against the other participants, and each is relieved of the threat and cost of inter-party litigation. When the government is involved in licensed activities, however, its waiver of claims is limited to amounts in excess of insurance required to cover claims for damage or loss to government property. Each participant in licensed activities further agrees to be responsible for personal injury, property damage or loss sustained by its own employees as a result of licensed activities. The final rules issued by the FAA under part 440 clarify that, except for U.S. Government participants including government contractors and subcontractors, the obligation of each participant in licensed activities to assume responsibility for such losses is a contractual obligation to indemnify and hold harmless the other participants in the event of losses sustained by one's own employee. The reciprocal waiver of claims agreement presented in 14 CFR part 440, appendix B, reflects this contractual undertaking. Therefore, claims of employees of the various participants in licensed activities, other than those of Government personnel as defined in the regulations fall outside the scope of liability insurance coverage required under the statute and are not eligible for indemnification as third party claims. Government personnel are treated differently, as explained in the part 440 rulemaking, because of limitations on the Government's ability to accept an unfunded contingent liability, and therefore claims of Government personnel are handled as third party claims to which a licensee's liability policy must respond.

The FAA will require a reciprocal waiver of claims agreement resembling that presented in 14 CFR part 440, appendix B, which attempts to fashion a single agreement covering all participants in related launch and reentry operations. Although the proposed part focuses upon licensed reentry activities, the FAA anticipates that most licensed reentry activity will involve reentry vehicles that are RLVs and has attempted to design a reciprocal waiver of claims agreement that accommodates both RLVs and other reentries. Participants in a licensed reentry may suffer damage or loss and their employees may suffer losses through their involvement in the licensed launch campaign required to place a reentry vehicle or payload in Earth orbit or outer space and all such participants would be included in the reciprocal waiver scheme to accomplish its intended objective of limiting the risk of inter-party litigation. Where a licensed reentry is intended to occur

sufficiently independently of the launch that placed the reentry vehicle in space, it may be possible to separate launch participants from reentry participants, and the FAA would address those situations on a case-by-case basis. For the near-term, the agency is proposing to utilize a form of agreement that encompasses both launch and reentry participants. The form of agreement proposed in part 450 reflects the agency's approach by referring to ''licensed activities'' and incorporating the broad definitions of ''customer'' and ''contractors and subcontractors'' provided in the proposed regulations. Where the identity of the customer for a licensed reentry is different from that for a launch of an RLV associated with the conduct of a reentry, both customers must sign the reciprocal waiver of claims agreement.

The reciprocal waiver of claims agreement is intended to be broadly construed and cover claims regardless of fault, but does not replace contractual rights and remedies negotiated by the parties in good faith and for consideration, such as reflight guarantees or replacement missions. In the part 440 Final Rule, the FAA indicated that only claims resulting from willful misconduct are necessarily removed from the reciprocal waiver and declined to remove gross negligence from the statutory waiver scheme as a matter of regulation. Since issuance of the part 440 Final Rule, however, the FAA has learned of reluctance among contractors, subcontractors and customers to include a waiver of gross negligence leaving participants in licensed launches to negotiate coverage for gross negligence-based claims to resolve any remaining ambiguity and to avoid litigation. Rather than facilitate the prospect of future litigation, the FAA now intends to foreclose that possibility by continuing to employ a no-fault, no subrogation waiver of claims agreement comparable to that utilized for licensed launches. In doing so, the agency affirmatively states that claims for gross negligence are intended to be comprehended by the reciprocal waiver of claims agreement in order to fulfill its statutory intent and purpose. The only exception is willful misconduct by a participant. The FAA believes that with the sole exception of willful misconduct, all fault-based claims, including gross negligence, must be waived in order to satisfactorily fulfill the intent of Congress in legislating a comprehensive reciprocal waiver scheme and foreclose erosion of its effectiveness through allegations of gross negligence.

A second concern has also come to the FAA's attention since issuance of the part 440 Final Rule. As a matter of convenience and to relieve regulatory burdens, the FAA implements statutory reciprocal waiver requirements by executing an agreement with the licensee and its customer and requiring that each of them pass on, or flow down, to their contractors and subcontractors responsibilities that must be accepted under the terms of the agreement. The FAA has learned that customers and contractors of launch participants have been reluctant to comply with flow down requirements of the reciprocal waiver of claims agreement. Although the form of agreement utilized by the FAA provides relief, through an indemnification provision, to a participant that suffers liability as a result of the failure of a signatory to implement the agreement properly, the FAA reminds participants that such relief measures are not intended to be used as an option in lieu of compliance with agreement requirements. Participants in licensed launch and reentry activities are *directed* by 49 U.S.C. 70112(b) to enter into such an agreement with the government and with each other. The FAA has qualified the requirement by noting that ''(o)nly those participants who have their personnel or property involved in licensed launch (or reentry) activities, and who may make claims against other participants as a result of loss or damage sustained by their personnel or (to their) property in the event of an accident, should be expected to enter into reciprocal waivers of claims.'' 61 FR at 39012. For such entities, participation is not intended to be elective. Failure to comply may subject a participant in licensed launch or reentry activities to enforcement proceedings by the FAA.

Section 450.19—United States Payment of Excess Third-Party Liability Claims

Proposed § 450.19 would set forth in a regulation the commitment of the U.S. Government and the procedures by which it accepts responsibility for satisfying successful third party claims against reentry and associated launch participants to the extent claims are covered claims and exceed required insurance up to $1.5 billion (as adjusted for post-January 1, 1989 inflation) above that amount, absent willful misconduct by the party on whose behalf payment of the third-party claim is sought.

Following expiration of the policy period required under the regulations, or if coverage is not available because of a ''usual'' exclusion, the Government undertakes responsibility for third-party claims from the first dollar of loss, as long as the claim is eligible for indemnification. According to House Science Committee report language, a clear causal nexus must exist between the licensed activity and the claim to give rise to the government's obligations. Absent this causal nexus, the legally liable party would be fully responsible for satisfying claims and, in the event of Government liability under a treaty obligation, the Government could pursue contribution from the responsible party. As previously noted, the interested public may refer to the part 440 Final Rule (63 FR 45592, Aug. 26, 1998) for a discussion of the FAA's approach to ''usual'' exclusions.

Paperwork Reduction Act

This proposal contains information collection requirements. As required by the Paperwork Reduction Act of 1995 (44 U.S.C. 3507(d)), the Department of Transportation has submitted the information collection requirements associated with this proposal to the Office of Management and Budget for its review.

Title: Financial Requirements for Licensed Reentry Activities.

The FAA is proposing to establish financial responsibility requirements covering risks associated with the licensed reentry of a reentry vehicle. The FAA would determine, on an individual basis, the amount of required insurance or other form of financial responsibility after examining the risks associated with a particular reentry vehicle, its operational capabilities and designated reentry site. This proposal provides general rules for demonstrating compliance with insurance requirements and implementing statutory-based Government/industry risk sharing provisions in a manner comparable to that currently utilized for commercial launches.

The required information will aid the FAA in establishing financial responsibility requirements covering risks associated with the licensed reentry of a reentry vehicle. The information to be collected supports FAA determining the amount of required liability insurance for a reentry operator after examining the risks associated with an reentry vehicle, its operational capabilities, and its designated reentry site. Data collected for the reentry case closely parallel information associated with financial responsibilities for licensed launch activities. The frequency of required submissions, therefore, will depend upon the number of prospective reentry vehicle operators authorized to conduct licensed reentry operations.

The Respondents are all licensees authorized to conduct licensed reentry activities. ESTIMATED AVERAGE ANNUAL BURDEN 1566.

The agency is soliciting comments to: (1) Evaluate whether the proposed collection of information is necessary for the proper performance of the functions of the agency, including whether the information will have practical utility; (2) evaluate the accuracy of the agency's estimate of the burden; (3) enhance the quality, utility, and clarity of the information to be collected; and (4) minimize the burden of the collection of information on those who are to respond, including through the use of appropriate automated, electronic, mechanical, or other technological collection techniques or other forms of information technology (for example, permitting electronic submission of responses).

Individuals and organizations may submit comments on the information collection requirements by December 6, 1999, and should direct them to the address listed in the **ADDRESSES** section of this document.

According to the regulations implementing the Paperwork Reduction Act of 1995 (5 CFR 1320.8(b)(2)(vi)), an agency may not conduct or sponsor, and a person is not required to respond to a collection of information unless it displays a currently valid OMB control number. The OMB control number for this information collection will be published in the **Federal Register** after it is approved by the Office of Management and Budget.

Regulatory Evaluation Summary

Proposed and final rule changes to Federal regulations must undergo several economic analyses. First, Executive Order 12866 directs that each Federal agency shall propose or adopt a regulation only upon a reasoned determination that the benefits of the intended regulation justify its costs. Second, the Regulatory Flexibility Act of 1980, as amended in May 1996, requires agencies to analyze the economic effect of regulatory changes on small entities. Third, the Office of Management and Budget directs agencies to assess the effect of regulatory changes on international trade.

In conducting these analyses, the FAA has determined that the proposed rule would generate benefits that justify its costs and is ''a non-significant regulatory action'' as defined in the Executive Order and the Department of Transportation Regulatory Policies and Procedures. The proposed rule is not a significant action because of public interest nor on the basis of economic impacts. The proposed rule is not expected to have a significant impact on a substantial number of small entities and would not constitute a barrier to international trade. In addition, this proposed rule does not contain Federal intergovernmental or private sector mandates. Therefore, the requirements of Title II of the Unfunded Mandates Reform Act of 1995 do not apply. These analyses, available in the docket, are summarized below.

Baseline for Analysis

For the purpose of this evaluation, the baseline is defined as industry practice that existed prior to the Commercial Space Act of October 1998 (CSA). The CSA authorizes the Secretary of the U.S. Department of Transportation to require reentry licensees to meet financial responsibility requirements, generally satisfied by acquiring liability insurance to cover those risks imposed by their intended reentry activities. Such requirements would be implemented in the form of this proposed rule. The baseline should represent routine industry practice in the absence of any proposed rulemaking requirements by FAA and prior to statutory authority received from Congress.

Costs

Reentry commercial space operators are likely to also be launch activity operators, given that RLVs will, for the foreseeable future, constitute the bulk of reentry vehicle activity. Since reentry operators would repeat much of the compliance process for the recently released final rule for launch financial responsibility, cost-saving knowledge will be gained that would be helpful in meeting similar proposed requirements for reentry financial responsibility. Even though reentry activities take place at different times than launch activities, still the personnel involved in both activities are expected to have acquired a high level of proficiency and cost-saving practices. The potential cost of the proposed reentry financial responsibility requirements are expected to be lower than they otherwise would be, as the result of knowledge gained from launch activities by such operators.

The proposed rule should result in a stronger, more stable, commercial space transportation industry by formalizing the statute from the CSA into regulation. Limiting risk based on maximum probable loss (MPL) should result in greater certainty of the potential liability costs (and resulting lower business risk) to commercial space transportation firms. The Federal Aviation Administration defines MPL as the tool that establishes the dollar value of the maximum magnitude of loss among probable accidental events causing casualties or property damage; the accidental event in question must be sufficiently probable to warrant financial responsibility protection.

The proposed rule would potentially impose costs on U.S. commercial space reentry operators and the U.S. government as the result of these two requirements.

- *Insurance Requirements for Licensed Reentry Activities.* In accordance with the Statute, the proposed rule would require U.S. licensed reentry commercial space operators to acquire insurance to cover possible damage or loss of Government property. The licensee would also be required to obtain insurance to cover possible liability to participants in reentry activities in the event of death, injury, damage or loss to third parties (including Government personnel). These requirements also include the duration of insurance.
- *Provisions Requiring Private Party Participants in Licensed Activities To Waive Claims Against One Another.* The proposed rule would require that potentially impacted operators enter into cross-waiver agreements with each other. Specifically, the private parties in licensed activities sign waivers by which the parties agree to forfeit the right to sue each other for damages or injuries associated with the activities. The licensee not only assumes responsibility for its own losses, but now also assumes responsibility for claims of its contractors and subcontractors against other private party participants in the event the cross-waiver requirement has not been properly applied to those parties.

The proposed 30-day duration of insurance coverage following a planned reentry may impose additional costs on reentry operators. Such costs are not expected to be significant since potential 30-day costs for reentry would be nearly the same as an existing requirement for launch activity, and reentry insurance coverage falls within the typical period of coverage routinely used by the commercial space industry. The shifting of expected costs above MPL of damage and loss claims or of injury claims from the licensees to the Government would also aid the commercial space transportation industry. The shifting of these costs onto the Government would relieve the licensees of the need to insure for these claims and would also demonstrate U.S. government support for the commercial space transportation industry. The cross-waiver provisions of the proposed rule should lower any costs of litigation among private party participants in licensed activities. The proposed requirement for cross-waivers limits the risk of liability to others in licensed

activities and results in a more certain business environment (or lower business risk) for all involved parties.

The FAA estimates that the proposed rule would result in the reallocation of expected liability insurance costs from licensees to the Federal government of about $4,200 ($3,700, discounted) over a five-year period. This estimate is based in part upon work by Princeton Synergetics Inc. (PSI), under contract with the FAA, which analyzed the consequences of the U.S. government's assumption of risk exposure of up to $1.5 billion (subject to adjustment for inflation after January 1, 1989) for third-party claims. The additional administrative (or paperwork cost) to the Federal government associated with FAA's responsibilities under the proposed rule is estimated at $7,600 ($5,800, discounted) over five years. Thus, the total cost to the FAA would be about $11,800 ($4,200+$7,600) over the next 5 years, as the result of the proposed rule. This cost estimate represents the amount that would be incurred by the FAA for financial responsibility aspects of the licensing process (which take into account those proposed provisions to protect private party participants against claims by third parties and provisions of cross-waivers).

Benefits

The primary benefit of the proposed rule is that it would support and promote U.S. commercial space reentry activity within the United States and by U.S. firms. It is clearly in the interest of the United States to remain in a worldwide position of leadership in commercial space flight. Specifically, the proposed rule would ensure that the United States reentry operators are not subject to a competitive trade disadvantage by their rivals abroad as a result of their inability to acquire adequate liability insurance to cover risks associated with their intended reentry activities.

This proposed rule would also generate other potential qualitative benefits in two forms. First, in terms of third parties, this proposed rule would provide added assurance that any damages to property or casualty losses (*e.g.*, fatalities or serious injuries) resulting from reentry activities would be adequately covered either by commercial liability insurance purchased by reentry operators or by the U.S. government. This potential benefit would be generated by the proposed requirement that all reentry operators have liability insurance coverage up to the MPL amount for risks resulting from their intended reentry activities and statutory risk sharing provisions whereby the U.S. government provides indemnification up to $1.5 billion (subject to adjustment for inflation after January 1, 1989) above the required insurance by this proposal. And last, the proposed cross-waiver requirement would also generate potential cost-savings by likely mitigating or eliminating litigation costs between reentry participants.

Initial Regulatory Flexibility Determination

The Regulatory Flexibility Act of 1980 establishes ''as a principle of regulatory issuance that agencies shall endeavor, consistent with the objective of the proposed rule and of applicable statutes, to fit regulatory and informational requirements to the scale of the business, organizations, and governmental jurisdictions subject to regulation.'' To achieve that principle, the Act requires agencies to solicit and consider flexible regulatory proposals and to explain the rationale for their actions. The Act covers a wide range of small entities, including small businesses, not-for-profit organizations and small governmental jurisdictions.

Agencies must perform a review to determine whether a proposed or final rule will have a significant economic impact on a substantial number of small entities. If the determination is that it will, the agency must prepare a regulatory flexibility analysis (RFA) as described in the Act.

However, if an agency determines that a proposed or final rule is not expected to have a significant economic impact on a substantial number of small entities, section 605(b) of the 1980 Act provides that the head of the agency may so certify and an RFA is not required. The certification must include a statement providing the factual basis for this determination, and the reasoning should be clear.

The Small Business Administration has defined small business entities relating to space vehicles (Standard Industrial Codes 3761, 3764, and 3769) as entities comprising fewer than 1,000 employees. The FAA has been unable to determine the extent to which the proposed rule would impact the five commercial space reentry entities currently developing reentry technology, due to the lack of information for the required cost of insurance, as explained previously in the cost section of this evaluation. The proposed rule could impose additional costs on potential small reentry operators in the form of higher insurance requirements (which often result in higher premiums), as the result of the proposed requirement to cover MPL for both third party liability and Government property. On the other hand, the proposed requirement could be partially offset or entirely offset by the potential cost-savings from the federal Government's statutory risk sharing indemnification feature of the proposed rule. This feature would shift the cost of insurance coverage from the licensee for any liability beyond MPL after 30 days, up to $1.5 billion (subject to adjustment for inflation after January 1, 1989). This cost-savings is estimated to be at least $4,200 for all of the potentially affected operators over the 5-year period (2000–2004). Still, with some degree of uncertainty, this information would suggest that the potential cost of compliance for reentry small operators might not be significant.

Despite the absence of quantitative cost information for potential reentry licensees and pursuant to the Regulatory Flexibility Act (5 U.S.C. 605(b)), the FAA certifies with reasonable certainty that the proposed rule would not impose a significant economic impact on a substantial number of small entities. While there maybe significant costs incurred by some operators, such costs are not expected to impact a substantial number of them. Since there is no cost of compliance information available to derive a quantitative cost estimate, there is still uncertainty about compliance costs. Because of this uncertainty, the FAA solicits comments from the commercial space reentry operators as to the net cost of compliance with the proposed rule. The FAA also solicits comments from affected entities with respect to this finding and determination. All comments must be clear and well documented.

International Trade Impact Assessment

The proposed rule contains revisions to commercial space transportation licensing regulations that would not constitute a barrier to international trade, including the export of domestic goods and services out of the United States. As noted in the benefits section of this evaluation, the proposed rule would implement statutory provisions such as measures aimed at strengthening the competitive position of U.S. reentry operators by allowing the U.S. government to share risks of additional liability insurance for reentry activity. This practice is done in other countries around the world for launch operators who compete with U.S. launch operators. The proposed rule would ensure that U.S. reentry operators would remain competitive with their counterparts abroad. For this reason, the

proposed rule is not expected to place domestic commercial space reentry operators at a competitive trade disadvantage with respect to foreign interests competing for similar business in international markets. It would also not hinder the ability of foreign commercial space rivals to compete in the United States. Therefore, the proposed rule is neither expected to affect trade opportunities of U.S. commercial space reentry doing business abroad nor would it adversely impact the trade opportunities of foreign firms doing business in the United States. The FAA invites comments on the validity of this assertion and any potential impacts related thereto.

Federalism Implications

The regulations proposed herein will not have a substantial direct effects on the states, on the relationship between the national government and the states, or on the distribution of power and responsibilities among the various levels of government. Therefore, in accordance with Executive Order 12612, it is determined that this proposal would not have sufficient federalism implications to warrant the preparation of a Federalism Assessment.

Unfunded Mandates Reform Act

Title II of the Unfunded Mandates Reform Act of 1995, enacted as Public Law 104–4 on March 22, 1995, requires each Federal agency, to the extent permitted by law, to prepare a written assessment of the effects of any Federal mandate upon State, local, and tribal governments, in the aggregate, or by the private sector, of $100 million or more (adjusted annually for inflation) in any one year. In 1998 dollars, this estimate of $100 million translates into $105 million using the GDP implicit price deflators for 1995 and 1998. Section 204(a) of the Act, Title 2 of the United States Code 1534(a), requires the Federal agency to develop an effectiveness process to permit timely input by elected officers (or their designees) of State, local, and tribal governments on a proposed ''significant intergovernmental mandate.'' A significant intergovernmental mandate under the Act is any provision in a Federal agency regulation that would impose an enforceable duty upon State, local, and tribal governments, in the aggregate, of $100 million (adjusted annually for inflation) in any one year. Section 203 of the Act, Title 2 of the United States Code 1533, which supplements section 204(a), provides that before establishing any regulatory requirements that might significantly or uniquely affect small governments, the agency shall have developed a plan that, among other things, provides for notice to potentially affected small governments, if any, and for a meaningful and timely opportunity for any affected small governments to provide input in the development of proposed rules.

Based on the evaluation and impacts reported herein, the proposed rule is not expected to meet the $105 million per year cost threshold. Consequently, it would not impose a significant cost on or uniquely affect small governments. Therefore, the requirements of Title II of the Unfunded Mandates Reform Act of 1995 do not apply to the proposed regulation.

Environmental Assessment

FAA Order 1050.1D defines FAA actions that may be categorically excluded from preparation of a National Environmental Policy Act (NEPA) environmental assessment (EA) or environmental impact statement (EIS). In accordance with FAA Order 1050.1D, appendix 4, paragraph 4(i), regulatory documents which cover administrative or procedural requirements qualify for a categorical exclusion.

Energy Impact

The energy impact of the rulemaking action has been assessed in accordance with the Energy Policy and Conservation Act (EPCA) and Public Law 94–163, as amended (42 U.S.C. 6362). It has been determined that it is not a major regulatory action under the provisions of the EPCA.

List of Subjects in 14 CFR Part 450

Armed forces; Claims; Federal building and facilities; Government property; Indemnity payments; Insurance; Reporting and recordkeeping requirements; Rockets; Space transportation and exploration.

Proposed Amendments

In consideration of the foregoing, the Federal Aviation Administration proposes to amend Chapter III of title 14 of the Code of Federal Regulations in one of the following two ways:

1. Subchapter C of Chapter III, Title 14, Code of Federal Regulations, would be amended by revising Part 440 to include the Financial Responsibility Requirements for Licensed Reentry Activities: or

2. Subchapter C of Chapter III, Title 14, Code of Federal Regulations, would be amended by adding a new Part 450 to read as follows:

PART 450—FINANCIAL RESPONSIBILITY

Subpart A—Financial Responsibility for Licensed Reentry Activities

Sec.
450.1 Scope of part; basis.
450.3 Definitions.
450.5 General.
450.7 Determination of maximum probable loss.
450.9 Insurance requirements for licensed reentry activities.
450.11 Duration of coverage; modifications.
450.13 Standard conditions of insurance coverage.
450.15 Demonstration of compliance.
450.17 Reciprocal waiver of claims requirements.
450.19 United States payment of excess third-party liability claims.
Appendix A to Part 450—Information Requirements for Obtaining a Maximum Probable Loss Determination for Licensed Reentry Activities.
Appendix B to Part 450—Agreement for Waiver of Claims and Assumption of Responsibility.

Authority: 49 U.S.C. 70101–70121; 49 CFR 1.47.

Subpart A Financial Responsibility for Licensed Reentry Activities

§ 450.1 Scope of part; basis.

This part sets forth financial responsibility and allocation of risk requirements applicable to commercial space reentry activities that are authorized to be conducted under a license issued pursuant to this subchapter.

§ 450.3 Definitions.

(a) For purposes of this part—

Bodily injury means physical injury, sickness, disease, disability, shock, mental anguish, or mental injury sustained by any person, including death.

Contractors and subcontractors means those entities that are involved at any tier, directly or indirectly, in licensed reentry activities, and includes suppliers of property and services, and the component manufacturers of a reentry vehicle or payload. Contractors and subcontractors include those entities as defined in § 440.3(a)(2) of this chapter involved in licensed launch activities associated with a particular reentry.

Customer means:

(1) A person who procures reentry services from a licensee or launch services associated with a particular reentry;

(2) Any person to whom the customer has sold, leased, assigned, or otherwise transferred its rights in the payload (or any part thereof), to be reentered by the

licensee, including a conditional sale, lease, assignment, or transfer of rights.

(3) Any person who has placed property on board the payload for reentry or payload services; and any person to whom the customer has transferred its rights to such services.

Federal range facility means a Government-owned installation at which launches or reentries take place.

Financial responsibility means statutorily required financial ability to satisfy liability as required under 49 U.S.C. 70101–70121.

Government personnel means employees of the United States, its agencies, and its contractors and subcontractors, involved in reentry services for licensed reentry activities or launch services for licensed launch activities associated with a particular reentry. Employees of the United States include members of the Armed Forces of the United States.

Hazardous operations means activities, processes, and procedures that, because of the nature of the equipment, facilities, personnel, or environment involved or function being performed, may result in bodily injury or property damage.

Liability means a legal obligation to pay claims for bodily injury or property damage resulting from licensed reentry activities.

License means an authorization to conduct licensed reentry activities, issued by the Office under this subchapter.

Licensed reentry activities means the reentry of a reentry vehicle, including a reusable launch vehicle (RLV), as defined in a regulation or license issued by the Office and carried out pursuant to a license.

Maximum probable loss (MPL) means the greatest dollar amount of loss for bodily injury or property damage that is reasonably expected to result from licensed reentry activities;

(1) Losses to third parties, excluding Government personnel and other launch or reentry participants' employees involved in licensed reentry activities, that are reasonably expected to result from licensed reentry activities are those having a probability of occurrence on the order of no less than one in ten million.

(2) Losses to Government property and Government personnel, as defined in this section, that are reasonably expected to result from licensed reentry activities are those having a probability of occurrence on the order of no less than one in one hundred thousand.

Office means the Associate Administrator for Commercial Space Transportation of the Federal Aviation Administration, U. S. Department of Transportation.

Property damage means partial or total destruction, impairment, or loss of tangible property, real or personal.

Regulations means the Commercial Space Transportation Licensing Regulations, codified at 14 CFR Ch. III.

Third party means:

(1) Any person other than:

(i) The United States, its agencies, and its contractors and subcontractors involved in reentry services for licensed reentry activities or launch services for licensed launch activities associated with a particular reentry;

(ii) The licensee and its contractors and subcontractors involved in reentry services for licensed reentry activities or launch services for licensed launch activities associated with a particular reentry; and

(iii) The customer and its contractors and subcontractors involved in reentry services for licensed reentry activities or launch services for licensed launch activities associated with a particular reentry.

(2) Government personnel, as defined in this section, are third parties.

United States means the United States Government, including its agencies.

(b) Except as otherwise provided in this section, any term used in this part and defined in 49 U.S.C. 70101–70121 or in § 401.5 of this chapter shall have the meaning contained therein.

§ 450.5 General.

(a) No person shall commence or conduct reentry activities that require a license unless that person has obtained a license and fully demonstrated compliance with the financial responsibility and allocation of risk requirements set forth in this part.

(b) The Office shall prescribe the amount of financial responsibility a licensee is required to obtain and any additions to or modifications of the amount in a license order issued concurrent with or subsequent to the issuance of a license.

(c) Demonstration of financial responsibility under this part shall not relieve the licensee of ultimate responsibility for liability, loss, or damage sustained by the United States resulting from licensed reentry activities, except to the extent that:

(1) Liability, loss, or damage sustained by the United States results from willful misconduct of the United States or its agents;

(2) Covered claims of third parties for bodily injury or property damage arising out of any particular reentry exceed the amount of financial responsibility required under § 450.9(c) of this part and do not exceed $1,500,000,000 (as adjusted for inflation occurring after January 1, 1989) above such amount, and are payable pursuant to 49 U.S.C. 70113 and § 450.19 of this part. Claims of employees of entities listed in § 450.3(a) in the definition of third party, in paragraphs (1)(ii) and (1)(iii) of this part for bodily injury or property damage are not covered claims;

(3) Covered claims for property loss or damage exceed the amount of financial responsibility required under § 450.9(e) of this part and do not result from willful misconduct of the licensee; or

(4) The licensee has no liability for covered claims by third parties for bodily injury or property damage arising out of any particular reentry that exceed $1,500,000,000 (as adjusted for inflation occurring after January 1, 1989) above the amount of financial responsibility required under § 450.9(c) of this part.

(d) A licensee's failure to comply with the requirements in this part may result in suspension or revocation of a license, and subjects the licensee to civil penalties as provided in part 405 of this chapter.

§ 450.7 Determination of maximum probable loss.

(a) The Office shall determine the maximum probable loss (MPL) from covered claims by a third party for bodily injury or property damage, and the United States, its agencies, and its contractors and subcontractors for covered property damage or loss, resulting from licensed reentry activities. The maximum probable loss determination forms the basis for financial responsibility requirements issued in a license order.

(b) The Office issues its determination of maximum probable loss no later than ninety days after a licensee or transferee has requested a determination and submitted all information required by the Office to make the determination. The Office shall consult with Federal agencies that are involved in, or whose personnel or property are exposed to risk of damage or loss as a result of, licensed reentry activities before issuing a license order prescribing financial responsibility requirements and shall notify the licensee or transferee if interagency consultation may delay issuance of the MPL determination.

(c) Information requirements for obtaining a maximum probable loss determination are set forth in Appendix A to this part. Any person requesting a determination of maximum probable loss must submit information in accordance with Appendix A requirements, unless the Office has waived requirements. In lieu of

submitting required information, a person requesting a maximum probable loss determination may designate and certify certain information previously submitted for a prior determination as complete, valid, and equally applicable to its current request. The requester is responsible for the continuing accuracy and completeness of information submitted under this part and shall promptly report any changes in writing.

(d) The Office shall amend a determination of maximum probable loss required under this section at any time prior to completion of licensed reentry activities as warranted by supplementary information provided to or obtained by the Office after the MPL determination is issued. Any change in financial responsibility requirements as a result of an amended MPL determination shall be set forth in a license order.

(e) The Office may make a determination of maximum probable loss at any time other than as set forth in paragraph (b) of this section, upon request by any person.

§ 450.9 Insurance requirements for licensed reentry activities.

(a) As a condition of each reentry license, the licensee must comply with insurance requirements set forth in this section and in a license order issued by the Office, or otherwise demonstrate the required amount of financial responsibility.

(b) The licensee must obtain and maintain in effect a policy or policies of liability insurance, in an amount determined by the Office under paragraph (c) of this section, that protects the following persons as additional insureds to the extent of their respective potential liabilities against covered claims by a third party for bodily injury or property damage resulting from licensed reentry activities:

(1) The licensee, its customer, and their respective contractors and subcontractors, and the employees of each, involved in licensed reentry activities and in licensed launch activities associated with a particular reentry;

(2) The United States, its agencies, and its contractors and subcontractors involved in licensed reentry activities and in licensed launch activities associated with a particular reentry; and

(3) Government personnel.

(c) The Office shall prescribe for each licensee the amount of insurance required to compensate the total of covered third-party claims for bodily injury or property damage resulting from licensed reentry activities. Covered third-party claims include claims by the United States, its agencies, and its contractors and subcontractors for damage or loss to property other than property for which insurance is required under paragraph (d) of this section. The amount of insurance required is based upon the Office's determination of maximum probable loss; however, it will not exceed the lesser of:

(1) $500 million; or

(2) The maximum liability insurance available on the world market at a reasonable cost, as determined by the Office.

(d) The licensee must obtain and maintain in effect a policy or policies of insurance, in an amount determined by the Office under paragraph (e) of this section, that covers claims by the United States, its agencies, and its contractors and subcontractors involved in licensed reentry activities resulting from licensed reentry activities. Property covered by this insurance must include all property owned, leased, or occupied by, or within the care, custody, or control of, the United States and its agencies, and its contractors and subcontractors involved in licensed reentry activities, at a Federal range facility. Insurance must protect the United States and its agencies, and its contractors and subcontractors involved in licensed reentry activities.

(e) The Office shall prescribe for each licensee the amount of insurance required to compensate claims for property damage under paragraph (d) of this section resulting from licensed reentry activities in connection with any particular reentry. The amount of insurance is based upon a determination of maximum probable loss; however, it will not exceed the lesser of:

(1) $100 million; or

(2) The maximum available on the world market at a reasonable cost, as determined by the Office.

(f) In lieu of a policy of insurance, a licensee may demonstrate financial responsibility in another manner meeting the terms and conditions applicable to insurance as set forth in this part. The licensee must describe in detail the method proposed for demonstrating financial responsibility and how it assures that the licensee is able to cover claims as required under this part.

§ 450.11 Duration of coverage; modifications.

(a) Insurance coverage required under § 450.9, or other form of financial responsibility, shall attach upon commencement of licensed reentry activities, and remain in full force and effect as follows:

(1) For ground operations, until completion of licensed reentry activities at the reentry site; and

(2) For reentry activities, thirty days from initiation of reentry flight; however, in the event of an abort that results in the reentry vehicle remaining on orbit, insurance shall remain in place until the Office's determination that risk to third parties and Government property as a result of licensed reentry activities is sufficiently small that financial responsibility is no longer necessary, as determined by the Office through the risk analysis conducted to determine MPL and specified in a license order.

(b) Financial responsibility required under this part may not be replaced, canceled, changed, withdrawn, or in any way modified to reduce the limits of liability or the extent of coverage, nor expire by its own terms, prior to the time specified in a license order, unless the Office is notified at least 30 days in advance and expressly approves the modification.

§ 450.13 Standard conditions of insurance coverage.

(a) Insurance obtained under § 450.9 shall comply with the following terms and conditions of coverage:

(1) Bankruptcy or insolvency of an insured, including any additional insured, shall not relieve the insurer of any of its obligations under any policy.

(2) Policy limits shall apply separately to each occurrence and, for each occurrence to the total of claims arising out of licensed reentry activities in connection with any particular reentry.

(3) Except as provided in this paragraph, each policy must pay claims from the first dollar of loss, without regard to any deductible, to the limits of the policy. A licensee may obtain a policy containing a deductible amount if the amount of the deductible is placed in an escrow account or otherwise demonstrated to be unobligated, unencumbered funds of the licensee, available to compensate claims at any time claims may arise.

(4) Each policy shall not be invalidated by any action or inaction of the licensee or any additional insured, including nonpayment by the licensee of the policy premium, and must insure the licensee and each additional insured regardless of any breach or violation of any warranties, declarations, or conditions contained in the policies by the licensee or any additional insured (other than a breach or violation by the licensee or an additional insured, and then only as against that licensee or additional insured).

(5) Exclusions from coverage must be specified.

(6) Insurance shall be primary without right of contribution from any other insurance that is carried by the licensee or any additional insured.

(7) Each policy must expressly provide that all of its provisions, except the policy limits, operate in the same manner as if there were a separate policy with and covering the licensee and each additional insured.

(8) Each policy must be placed with an insurer of recognized reputation and responsibility that is licensed to do business in any State, territory, possession of the United States, or the District of Columbia. A licensee complies with this section if each of its policies of insurance obtained under this part contains a contract clause in which the insurer agrees to submit to the jurisdiction of a court of competent jurisdiction within the United States and designates an authorized agent within the United States for service of legal process on the insurer.

(9) Except as to claims resulting from the willful misconduct of the United States or its agents, the insurer shall waive any and all rights of subrogation against each of the parties protected by required insurance.

(b) [Reserved.]

§ 450.15 Demonstration of compliance.

(a) A licensee must submit evidence of financial responsibility and compliance with allocation of risk requirements under this part, as follows, unless a license order specifies otherwise due to the proximity of the licensee's intended date for commencement of licensed activities:

(1) The waiver of claims agreement required under § 450.17(c) of this part must be submitted at least 30 days before commencement of licensed launch activities involving the reentry licensee;

(2) Evidence of insurance must be submitted at least 30 days before commencement of licensed launch activities involving the reentry licensee;

(3) Evidence of financial responsibility in a form other than insurance, as provided under § 450.9(f) of this part, must be submitted at least 60 days before commencement of licensed launch activities involving the reentry licensee; and

(4) Evidence of renewal of insurance or other form of financial responsibility must be submitted at least 30 days in advance of its expiration date.

(b) Upon a complete demonstration of compliance with financial responsibility and allocation of risk requirements under this part, the requirements shall preempt any provisions in agreements between the licensee and an agency of the United States governing access to or use of United States reentry property or reentry services for licensed reentry activities which address financial responsibility, allocation of risk and related matters covered by 49 U.S.C. 70112, 70113.

(c) A licensee must demonstrate compliance as follows:

(1) The licensee must provide proof of insurance required under § 450.9 by:

(i) Certifying to the Office that it has obtained insurance in compliance with the requirements of this part and any applicable license order;

(ii) Filing with the Office one or more certificates of insurance evidencing insurance coverage by one or more insurers under a currently effective and properly endorsed policy or policies of insurance, applicable to licensed reentry activities, on terms and conditions and in amounts prescribed under this part, and specifying policy exclusions;

(iii) In the event of any policy exclusions or limitations of coverage that may be considered usual under § 450.19(c) of this part, or for purposes of implementing the Government's waiver of claims for property damage under 49 U.S.C. 70112(b)(2), certifying that insurance covering the excluded risks is not commercially available at reasonable cost; and

(iv) Submitting to the Office, for signature by the Department on behalf of the United States Government, the waiver of claims and assumption of responsibility agreement required by § 450.17(c) of this part, executed by the licensee and its customer.

(2) Certifications required under this section must be signed by a duly authorized officer of the licensee.

(d) Certificate(s) of insurance required under paragraph (c)(1)(ii) of this section must be signed by the insurer issuing the policy and accompanied by an opinion of the insurance broker that the insurance obtained by the licensee complies with the specific requirements for insurance set forth in this part and any applicable license order.

(e) The licensee must maintain, and make available for inspection by the Office upon request, all required policies of insurance and other documents necessary to demonstrate compliance with this part.

(f) In the event the licensee demonstrates financial responsibility using means other than insurance, as provided under § 450.9(f) of this part, the licensee must provide proof that it has met the requirements set forth in this part and in a license order issued by the Office.

§ 450.17 Reciprocal waiver of claims requirements.

(a) As a condition of each reentry license, the licensee shall comply with reciprocal waiver of claims requirements as set forth in this section.

(b) The licensee shall implement reciprocal waivers of claims with its contractors and subcontractors, its customer(s) and the customer's contractors and subcontractors, and the launch licensee and its contractors and subcontractors and customers, under which each party waives and releases claims against the other parties to the waivers and agrees to assume financial responsibility for property damage it sustains and for bodily injury or property damage sustained by its own employees, and to hold harmless and indemnify each other from bodily injury or property damage sustained by its employees, resulting from reentry activities, including licensed launch activities associated with a particular reentry, regardless of fault.

(c) For each licensed reentry in which the U.S. Government, its agencies, or its contractors and subcontractors is involved in licensed reentry activities or licensed launch activities associated with a particular reentry, or where property insurance is required under § 440.9(d) of this subchapter, or § 450.9(d), the Federal Aviation Administration of the Department of Transportation, the licensee, and its customer shall enter into a reciprocal waiver of claims agreement in the form set forth in appendix B to this part or that satisfies its requirements.

(d) The reentry licensee and its customer, the launch licensee and its customer, and the Federal Aviation Administration of the Department of Transportation on behalf of the United States and its agencies but only to the extent provided in legislation, must agree in any waiver of claims agreement required under this part to indemnify another party to the agreement from claims by the indemnifying party's contractors and subcontractors arising out of the indemnifying party's failure to implement properly the waiver requirement.

§ 450.19 United States payment of excess third-party liability claims.

(a) The United States pays successful covered claims (including reasonable expenses of litigation or settlement) of a third party against the licensee, the customer, and the contractors and subcontractors of the licensee and the customer, and the employees of each involved in licensed reentry activities, the licensee, customer and the contractors and subcontractors of each

involved in licensed launch activities associated with a particular reentry, and the contractors and subcontractors of the United States and its agencies, and their employees, involved in licensed reentry activities and licensed launch activities associated with a particular reentry, to the extent provided in an appropriation law or other legislative authority providing for payment of claims in accordance with 49 U.S.C. 70113, and to the extent the total amount of such covered claims arising out of any particular reentry:

(1) Exceeds the amount of insurance required under § 450.9(b); and

(2) Is not more than $1,500,000,000 (as adjusted for inflation occurring after January 1, 1989) above that amount.

(b) Payment by the United States under paragraph (a) of this section shall not be made for any part of such claims for which bodily injury or property damage results from willful misconduct by the party seeking payment.

(c) The United States shall provide for payment of claims by third parties for bodily injury or property damage that are payable under 49 U.S.C. 70113 and not covered by required insurance under § 450.9(b), without regard to the limitation under paragraph (a)(1) of this section, because of an insurance policy exclusion that is usual. A policy exclusion is considered usual only if insurance covering the excluded risk is not commercially available at reasonable rates. The licensee must submit a certification in accordance with § 450.15(c)(1)(iii) of this part for the United States to cover the claims.

(d) Upon the expiration of the policy period prescribed in accordance with § 450.11(a), the United States shall provide for payment of claims that are payable under 49 U.S.C. 70113 from the first dollar of loss up to $1,500,000,000 (as adjusted for inflation occurring after January 1, 1989).

(e) Payment by the United States of excess third-party claims under 49 U.S.C. 70113 shall be subject to:

(1) Prompt notice by the licensee to the Office that the total amount of claims arising out of licensed reentry activities exceeds, or is likely to exceed, the required amount of financial responsibility. For each claim, the notice must specify the nature, cause, and amount of the claim or lawsuit associated with the claim, and the party or parties who may otherwise be liable for payment of the claim;

(2) Participation or assistance in the defense of the claim or lawsuit by the United States, at its election;

(3) Approval by the Office of any settlement, or part of a settlement, to be paid by the United States; and

(4) Approval by Congress of a compensation plan prepared by the Office and submitted by the President.

(f) The Office will:

(1) Prepare a compensation plan outlining the total amount of claims and meeting the requirements set forth in 49 U.S.C. 70113;

(2) Recommend sources of funds to pay the claims; and

(3) Propose legislation as required to implement the plan.

(g) The Office may withhold payment of a claim if it finds that the amount is unreasonable, unless it is the final order of a court that has jurisdiction over the matter.

Appendix A to Part 450—Information Requirements for Obtaining a Maximum Probable Loss Determination for Licensed Reentry Activities

Any person requesting a maximum probable loss determination shall submit the following information to the Office, unless the Office has waived a particular information requirement under 14 CFR 450.7(c):

I. General Information

A. Reentry mission description.

1. A description of mission parameters, including:

a. Orbital inclination;

b. Orbit altitudes (apogee and perigee); and

c. Reentry trajectory.

2. Reentry flight sequences.

3. Reentry initiation events and the time for each event.

4. Nominal landing location, alternative landing sites and contingency abort sites.

5. Identification of landing facilities, (planned date of reentry), and reentry windows.

6. If the applicant has previously been issued a license to conduct reentry activities using the same reentry vehicle to the same reentry (site) facility, a description of any differences planned in the conduct of proposed activities.

B. Reentry Vehicle Description.

1. General description of the reentry vehicle including dimensions.

2. Description of major systems, including safety systems.

3. Description of propulsion system (reentry initiation system) and type of fuel used.

4. Identification of all propellants to be used and their hazard classification under the Hazardous Materials Table, 49 CFR 172.101.

5. Description of hazardous components.

C. Payload.

1. General description of any payload, including type (*e.g.*, telecommunications, remote sensing), propellants, and hazardous components or materials, such as toxic or radioactive substances.

D. Flight Termination System/Flight Safety System.

1. Identification of any flight termination system (FTS) or Flight safety System (FSS) on the reentry vehicle, including a description of operations and component location on the vehicle.

II. Flight Operations

A. Identification of reentry site facilities exposed to risk during vehicle reentry and landing.

B. Identification of accident failure scenarios, probability assessments for each, and estimation of risks to Government personnel, individuals not involved in licensed reentry activities, and Government property, due to property damage or bodily injury. The estimation of risks for each scenario shall take into account the number of such individuals at risk as a result of reentry (flight) and landing of a reentry vehicle (on-range, off-range, and down-range) and specific, unique facilities exposed to risk. Scenarios shall cover the range of reentry trajectories for which authorization is sought in the license application.

C. On-orbit risk analysis assessing risks posed by a reentry vehicle to operational satellites during reentry.

D. Reentry risk analysis assessing risks to Government personnel and individuals not involved in licensed reentry activities as a result of inadvertent or random reentry of the launch vehicle or its components.

E. Nominal and 3-sigma dispersed trajectory in one-second intervals, from reentry initiation through landing or impact. (Coordinate system will be specified on a case by case basis)

F. Three-sigma landing or impact dispersion area in downrange (+/−) and crossrange (+/−) measured from the nominal, and contingency landing or impact target. The applicant is responsible for including all significant landing or impact dispersion constituents in the computations of landing or impact dispersion areas. The dispersion constituents should include, but not be limited to: Variation in orbital position and velocity at the reentry initiation time; variation in re-entry initiation time offsets, either early or late; variation in the bodies' ballistic coefficient; position and velocity variation due to winds; and variations in re-entry retro-maneuvers.

G. Malfunction turn data (tumble, trim) for guided (controllable) vehicles. The malfunction turn data shall include the total angle turned by the velocity vector versus turn duration time at one second interval; the magnitude of the velocity vector versus turn duration time at one second intervals; and an indication on the data where the re-entry body will impact the earth, or breakup due to aerodynamic loads. A malfunction turn data set is required for each malfunction time. Malfunction turn start times shall not exceed four-second intervals along the trajectory.

H. Identification of debris casualty areas and the projected number and ballistic coefficient of fragments expected to result from each failure mode during reentry.

III. Post-Flight Processing Operations

A. General description of post-flight ground operations including overall sequence and location of operations for removal of vehicle and components and processing equipment from the reentry site

facility and for handling of hazardous materials, and designation of hazardous operations.

B. Identification of all facilities used in conducting post-flight processing operations.

C. For each hazardous operation:

1. Identification of location where each operation is performed, including each building or facility identified by name or number.

2. Identification of facilities adjacent to location where each operation is performed and exposed to risk, identified by name or number.

3. Maximum number of Government personnel and individuals not involved in licensed reentry activities who may be exposed to risk during each operation. For Government personnel, identification of his or her employer.

4. Identify and provide reentry site facility policies or requirements applicable to the conduct of operations.

Appendix B to Part 450—Agreement for Waiver of Claims and Assumption of Responsibility

THIS AGREEMENT is entered into this __ day of _____, by and among [Licensee] (the ''Licensee''), [Customer] (the ''Customer'') and the Federal Aviation Administration of the Department of Transportation, on behalf of the United States Government (collectively, the ''Parties''), to implement the provisions of § 450.17(c) of the Commercial Space Transportation Licensing Regulations, 14 CFR Ch. III (the ''Regulations'').

In consideration of the mutual releases and promises contained herein, the Parties hereby agree as follows:

1. DEFINITIONS

Contractors and Subcontractors means entities described in section 450.3 of the Regulations, 14 CFR 450.3.

Customer means the above-named Customer on behalf of the Customer and any person described in § 450.3 of the Regulations, 14 CFR 450.3.

License means License No. _____ issued on _____, by the Associate Administrator for Commercial Space Transportation, Federal Aviation Administration, Department of Transportation, to the Licensee, including all license orders issued in connection with the License.

Licensee means the Licensee and any transferee of the Licensee under 49 U.S.C. Subtitle IX, ch. 701.

United States means the United States and its agencies involved in Licensed Activities.

Except as otherwise defined herein, terms used in this Agreement and defined in 49 U.S.C. Subtitle IX, ch. 701—Commercial Space Launch Activities, or in the Regulations, shall have the same meaning as contained in 49 U.S.C. Subtitle IX, ch. 701, or the Regulations, respectively.

2. WAIVER AND RELEASE OF CLAIMS

(a) Licensee hereby waives and releases claims it may have against Customer and the United States, and against their respective Contractors and Subcontractors, for Property Damage it sustains and for Bodily Injury or Property Damage sustained by its own employees, resulting from Licensed Activities, regardless of fault.

(b) Customer hereby waives and releases claims it may have against Licensee and the United States, and against their respective Contractors and Subcontractors, for Property Damage it sustains and for Bodily Injury or Property Damage sustained by its own employees, resulting from Licensed Activities, regardless of fault.

(c) The United States hereby waives and releases claims it may have against Licensee and Customer, and against their respective Contractors and Subcontractors, for Property Damage it sustains, and for Bodily Injury or Property Damage sustained by its own employees, resulting from Licensed Activities, regardless of fault, to the extent that claims it would otherwise have for such damage or injury exceed the amount of insurance or demonstration of financial responsibility required under §§ 440.9(c) and (e) or sections 450.9(c) and (e), respectively, of the Regulations, 14 CFR 440.9(c) and (e) or 14 CFR 450.9(c) and (e).

3. ASSUMPTION OF RESPONSIBILITY

(a) Licensee and Customer shall each be responsible for Property Damage it sustains and for Bodily Injury or Property Damage sustained by its own employees, resulting from Licensed Activities, regardless of fault. Licensee and Customer shall each hold harmless and indemnify each other, the United States, and the Contractors and Subcontractors of each Party, for Bodily Injury or Property Damage sustained by its own employees, resulting from Licensed Activities, regardless of fault.

(b) The United States shall be responsible for Property Damage it sustains, and for Bodily Injury or Property Damage sustained by its own employees, resulting from Licensed Activities, regardless of fault, to the extent that claims it would otherwise have for such damage or injury exceed the amount of insurance or demonstration of financial responsibility required under §§ 440.9(c) and (e) or §§ 450.9(c) and (e), respectively, of the Regulations, 14 CFR 440.9(c) and (e) or 14 CFR 450.9(c) and (e).

4. EXTENSION OF ASSUMPTION OF RESPONSIBILITY AND WAIVER

(a) Licensee shall extend the requirements of the waiver and release of claims, and the assumption of responsibility, hold harmless, and indemnification, as set forth in paragraphs 2(a) and 3(a), respectively, to its Contractors and Subcontractors by requiring them to waive and release all claims they may have against Customer and the United States, and against the respective Contractors and Subcontractors of each, and to agree to be responsible, for Property Damage they sustain and to be responsible, hold harmless and indemnify Customer and the United States, and the respective Contractors and Subcontractors of each, for Bodily Injury or Property Damage sustained by their own employees, resulting from Licensed Activities, regardless of fault.

(b) Customer shall extend the requirements of the waiver and release of claims, and the assumption of responsibility, hold harmless, and indemnification, as set forth in paragraphs 2(b) and 3(a), respectively, to its Contractors and Subcontractors by requiring them to waive and release all claims they may have against Licensee and the United States, and against the respective Contractors and Subcontractors of each, and to agree to be responsible, for Property Damage they sustain and to be responsible, hold harmless and indemnify Licensee and the United States, and the respective Contractors and Subcontractors of each, for Bodily Injury or Property Damage sustained by their own employees, resulting from Licensed Activities, regardless of fault.

(c) The United States shall extend the requirements of the waiver and release of claims, and the assumption of responsibility as set forth in paragraphs 2(c) and 3(b), respectively, to its Contractors and Subcontractors by requiring them to waive and release all claims they may have against Licensee and Customer, and against the respective Contractors and Subcontractors of each, and to agree to be responsible, for any Property Damage they sustain and for any Bodily Injury or Property Damage sustained by their own employees, resulting from Licensed Activities, regardless of fault, to the extent that claims they would otherwise have for such damage or injury exceed the amount of insurance or demonstration of financial responsibility required under §§ 440.9(c) and (e) or § 450.9(c) and (e), respectively, of the Regulations, 14 CFR 440.9(c) and (e) or 14 CFR 450.9(c) and (e).

5. INDEMNIFICATION

(a) Licensee shall hold harmless and indemnify Customer and its directors, officers, servants, agents, subsidiaries, employees and assignees, or any or them, and the United States and its agencies, servants, agents, subsidiaries, employees and assignees, or any or them, from and against liability, loss or damage arising out of claims that Licensee's Contractors and Subcontractors may have for Property Damage sustained by them and for Bodily Injury or Property Damage sustained by their employees, resulting from Licensed Activities.

(b) Customer shall hold harmless and indemnify Licensee and its directors, officers, servants, agents, subsidiaries, employees and assignees, or any or them, and the United States and its agencies, servants, agents, subsidiaries, employees and assignees, or any of them, from and against liability, loss or damage arising out of claims that Customer's Contractors and Subcontractors, or any person on whose behalf Customer enters into this Agreement, may have for Property Damage sustained by them and for Bodily Injury or Property Damage sustained by their employees, resulting from Licensed Activities.

(c) To the extent provided in advance in an appropriations law or to the extent there is enacted additional legislative authority providing for the payment of claims, the United States shall hold harmless and indemnify Licensee and Customer and their respective directors, officers, servants, agents, subsidiaries, employees and assignees, or any of them, from and against liability, loss or damage arising out of claims that Contractors

and Subcontractors of the United States may have for Property Damage sustained by them, and for Bodily Injury or Property Damage sustained by their employees, resulting from Licensed Activities, to the extent that claims they would otherwise have for such damage or injury exceed the amount of insurance or demonstration of financial responsibility required under §§ 440.9(c) and (e) or 450.9(c) and (e), respectively, of the Regulations, 14 CFR 440.9 (c) and (e) or 14 CFR 450.9(c) and (e).

6. ASSURANCES UNDER 49 U.S.C. 70112(e)

Notwithstanding any provision of this Agreement to the contrary, Licensee shall hold harmless and indemnify the United States and its agencies, servants, agents, employees and assignees, or any of them, from and against liability, loss or damage arising out of claims for Bodily Injury or Property Damage, resulting from Licensed Launch Activities, regardless of fault, except to the extent that: (i) As provided in section 7(b) of this Agreement, claims result from willful misconduct of the United States or its agents; (ii) claims for Property Damage sustained by the United States or its Contractors and Subcontractors exceed the amount of insurance or demonstration of financial responsibility required under § 440.9(e) or § 450.9(e) of the Regulations (14 CFR 440.9(e) or 450.9(e)); (iii) claims by a Third Party for Bodily Injury or Property Damage exceed the amount of insurance or demonstration of financial responsibility required under § 440.9(c) or § 450.9(c) of the Regulations (14 CFR 440.9(c) or 450.9(c)), and do not exceed $1,500,000,000 (as adjusted for inflation after January 1, 1989) above such amount, and are payable pursuant to the provisions of 49 U.S.C. 70113 and § 440.19 or § 450.19 of the Regulations (14 CFR 440.19 or 450.19); or (iv) Licensee has no liability for claims exceeding $1,500,000,000 (as adjusted for inflation after January 1, 1989) above the amount of insurance or demonstration of financial responsibility required under § 440.9(c) or § 450.9(c) of the Regulations (14 CFR 440.9(c) or 450.9(c)).

7. MISCELLANEOUS

(a) Nothing contained herein shall be construed as a waiver or release by Licensee, Customer or the United States of any claim by an employee of the Licensee, Customer or the United States, respectively, including a member of the Armed Forces of the United States, for Bodily Injury or Property Damage, resulting from Licensed Activities.

(b) Notwithstanding any provision of this Agreement to the contrary, any waiver, release, assumption of responsibility or agreement to hold harmless and indemnify herein shall not apply to claims for Bodily Injury or Property Damage resulting from willful misconduct of any of the Parties, the Contractors and Subcontractors of any of the Parties, and in the case of Licensee and Customer and the Contractors and Subcontractors of each of them, the directors, officers, agents and employees of any of the foregoing, and in the case of the United States, its agents.

(c) In the event that more than one customer is involved in Licensed Activities, references herein to Customer shall apply to, and be deemed to include, each such customer severally and not jointly.

(d) This Agreement shall be governed by and construed in accordance with United States Federal law.

In Witness Whereof, the Parties to this Agreement have caused the Agreement to be duly executed by their respective duly authorized representatives as of the date written above.

LICENSEE

By:
Its:

CUSTOMER

By:
Its:

DEPARTMENT OF TRANSPORTATION

Issued in Washington, DC on September 24, 1999.

Patricia G. Smith,

Associate Administrator for Commercial Space Transportation.

[FR Doc. 99–25457 Filed 10–5–99; 8:45 am]

BILLING CODE 4910–13–P

federal register

Wednesday
October 6, 1999

Part V

Department of Transportation

Research and Special Programs Administration

Tennessee Hazardous Waste Transporter Fee and Reporting Requirements; Notice

DEPARTMENT OF TRANSPORTATION

Research and Special Programs Administration

[Docket No. RSPA–98–3665]

Preemption Determination No. 21(R); Tennessee Hazardous Waste Transporter Fee and Reporting Requirements

AGENCY: Research and Special Programs Administration (RSPA), DOT.

ACTION: Notice of administrative determination of preemption by RSPA's Associate Administrator for Hazardous Materials Safety.

Applicant: Association of Waste Hazardous Materials Transporters (AWHMT).

Local Laws Affected: Tennessee Code 68–212–203(a)(6); Tennessee Rules and Regulations 1200–1–11–.04(4)(a)4, 1200–1–13–.03(1)(e).

Modes Affected: Highway and Rail.

SUMMARY: Federal hazardous material transportation law preempts Tennessee's requirement for hazardous waste transporters to pay a $650 per year remedial action fee because that fee is not fair and it is not used for purposes related to transporting hazardous material. Federal hazardous material transportation law also preempts Tennessee's requirement for a transporter to submit a written report of a discharge of hazardous waste during transportation because that requirement is not substantively the same as RSPA's requirement in the Hazardous Materials Regulations.

FOR FURTHER INFORMATION CONTACT: Frazer C. Hilder, Office of the Chief Counsel, Research and Special Programs Administration, U.S. Department of Transportation, Washington, DC 20590–0001 (Tel. No. 202–366–4400).

SUPPLEMENTARY INFORMATION:

I. Background

In March 1998, AWHMT applied for a determination that Federal hazardous material transportation law preempts Tennessee statutory and regulatory requirements that transporters of hazardous waste pay a remedial action fee and file written reports of any discharge of hazardous waste within the State.

Tennessee requires a transporter to hold a permit in order to pick up or deliver hazardous waste within the State. Tennessee Code 68–212–108(a)(1); Rule 1200–1–11–.04(2) of the Tennessee Department of Environment and Conservation (DEC). In addition to the initial application and annual renewal fees to obtain this permit, which are not challenged by AWHMT, the transporter must also pay a $650 ''remedial action fee'' each year, under Tennessee Code 68–212–203(a)(6) and DEC Rule 1200–1–13.03(1)(e). (This fee had been set at $550 for the 1994–95 fiscal year and $600 for the 1995–96 fiscal year. *Id.*) The remedial action fees paid by transporters are deposited into a ''special agency account . . . known as the 'hazardous waste remedial action fund.' '' Tennessee Code 68–212–204(a). The monies in this fund may be used for a number of purposes, including identifying, investigating, cleaning up and monitoring ''inactive hazardous substance sites''; matching funds provided by the United States to clean up hazardous substance sites; providing on-site technical assistance to hazardous waste generators; taking additional measures to reduce the generation of hazardous waste within the State; and preparing an annual report to the Tennessee Legislature. Tennessee Code 68–212–205.

Tennessee also requires a transporter to submit to DEC, ''[w]ithin fifteen days of occurrence,'' a written report ''on each hazardous waste discharge during transportation that occurs in the state.'' DEC Rule 1200–1–11–.04(4)(a)4. The Note to this section states that a copy of DOT form F 5800.1, as required by 49 CFR 171.16, ''shall suffice for this report provided that it is properly completed and supplemented as necessary to include the information required'' in subsection (a)3 with respect to immediate notification of any discharge of hazardous waste.

AWHMT contends that Tennessee's remedial action fee is preempted because the proceeds are not used exclusively for purposes related to transporting hazardous material, including enforcement and planning, developing, and maintaining a capability for emergency response. AWHMT also maintains that this is a ''flat fee'' that is preempted because it has no relation to the transporter's operations within the State. In addition, AWHMT argues that Tennessee's requirement to submit written reports of any hazardous waste discharge is preempted because it is not substantively the same as DOT's requirements in 49 CFR 171.16.

The text of AWHMT's application was published in the **Federal Register**, and interested parties were invited to submit comments. 63 FR 17479 (April 9, 1998), correction, 63 FR 18964 (April 16, 1998). Comments were submitted by DEC, the Association of American Railroads (AAR), and the Hazardous Materials Advisory Council (HMAC). Rebuttal comments were submitted by AWHMT, DEC, and AAR. In its rebuttal comments, DEC asked RSPA to reopen the comment period to allow commenters to respond to rebuttal comments. RSPA denied that request but called DEC's attention to RSPA's procedural regulations providing that ''Late-filed comments are considered so far as practicable.'' 49 CFR 107.205(c). Accordingly, in the event that a commenter raises a new issue in rebuttal comments, or there is a change in the facts or law involved in a preemption application, an interested party may always bring these matters to RSPA's attention. No late-filed comments were received.

II. Federal Preemption

The Hazardous Materials Transportation Act (HMTA) was enacted in 1975 to give the Department of Transportation greater authority ''to protect the Nation adequately against the risks to life and property which are inherent in the transportation of hazardous materials in commerce.'' Pub. L. 93–633 § 102, 88 Stat. 2156, presently codified as revised in 49 U.S.C. 5101. The HMTA ''replace[d] a patchwork of state and federal laws and regulations * * * with a scheme of uniform, national regulations.'' *Southern Pac. Transp. Co.* v. *Public Serv. Comm'n,* 909 F.2d 352, 353 (9th Cir. 1980). On July 5, 1994, the HMTA was among the many Federal laws relating to transportation that were revised, codified and enacted ''without substantive change'' by Public Law 103–272, 108 Stat. 745. The Federal hazardous material transportation law is now found in 49 U.S.C. Chapter 51.

The HMR are currently issued under the direction in 49 U.S.C. 5103(b)(1) that DOT ''shall prescribe regulations for the safe transportation of hazardous material in intrastate, interstate, and foreign commerce.'' The term ''hazardous material'' specifically includes hazardous wastes. 49 CFR 171.8; *see also* § 171.1(a)(1).

A statutory provision for Federal preemption was central to the HMTA. In 1974, the Senate Commerce Committee ''endorse[d] the principle of preemption in order to preclude a multiplicity of State and local regulations and the potential for varying as well as conflicting regulations in the area of hazardous materials transportation.'' S. Rep. No. 1102, 93rd Cong. 2nd Sess. 37 (1974). More recently, a Federal Court of Appeals found that uniformity was the ''linchpin'' in the design of the HMTA, including the 1990 amendments that expanded the preemption provisions.

Colorado Pub. Util. Comm'n v. *Harmon,* 951 F.2d 1571, 1575 (10th Cir. 1991).

The 1990 amendments to the HMTA codified the ''dual compliance'' and ''obstacle'' criteria that RSPA had applied in issuing inconsistency rulings before 1990.[1] The dual compliance and obstacle criteria are based on U.S. Supreme Court decisions on preemption. *Hines* v. *Davidowitz,* 312 U.S. 52 (1941); *Florida Lime & Avocado Growers, Inc.* v. *Paul,* 373 U.S. 132 (1963); *Ray* v. *Atlantic Richfield, Inc.,* 435 U.S. 151 (1978). As now set forth in 49 U.S.C. 5125(a), these criteria provide that, in the absence of a waiver of preemption by DOT under 49 U.S.C. 5125(e) or unless it is authorized by another Federal law, ''a requirement of a State, political subdivision of a State, or Indian tribe'' is explicitly preempted if

> (1) complying with a requirement of the State, political subdivision or tribe and a requirement of this chapter or a regulation issued under this chapter is not possible; or
>
> (2) the requirement of the State, political subdivision, or Indian tribe, as applied or enforced, is an obstacle to the accomplishing and carrying out this chapter or a regulation prescribed under this chapter.

In the 1990 amendments to the HMTA, Congress also added additional preemption provisions on certain ''covered subject'' areas and with regard to fees imposed by a State, political subdivision, or Indian tribe on the transportation of hazardous material. The covered subject areas include ''the written notification, recording, and reporting of the unintentional release in transportation of hazardous material,'' 49 U.S.C. 5125(b)(1)(D); unless it is authorized by another Federal law or a DOT waiver of preemption, a non-Federal requirement on this subject matter is preempted when it is not ''substantively the same as a provision of this chapter or a regulation prescribed under this chapter.'' 49 U.S.C. 5125(b)(1). RSPA has defined ''substantively the same'' to mean ''conforms in every significant respect to the Federal requirement. Editorial and other similar *de minimis* changes are permitted.'' 49 CFR 107.202(d).

In addition, 49 U.S.C. 5125(g)(1) provides that a State, political subdivision, or Indian tribe may

> impose a fee related to transporting hazardous material only if the fee is fair and used for a purpose relating to transporting hazardous material, including enforcement and planning, developing, and maintaining a capability for emergency response.

Under 49 U.S.C. 5125(d)(1), any directly affected person may apply to the Secretary of Transportation for a determination whether a State, political subdivision or Indian tribe requirement is preempted. The Secretary of Transportation has delegated to RSPA the authority to make determinations of preemption, except for those concerning highway routing (which have been delegated to FHWA). 49 CFR 1.53(b). Under RSPA's regulations, preemption determinations are issued by RSPA's Associate Administrator for Hazardous Materials Safety. 49 CFR 107.209(a).

Section 5125(d)(1) requires that notice of an application for a preemption determination be published in the **Federal Register**. Following the receipt and consideration of written comments, RSPA will publish its determination in the **Federal Register**. *See* 49 CFR 107.209(d). A short period of time is allowed for filing petitions for reconsideration. 49 CFR 107.211. Any party to the proceeding may seek judicial review in a Federal district court. 49 U.S.C. 5125(f).

Preemption determinations do not directly address issues of preemption arising under the Commerce Clause of the Constitution, except that, as discussed in more detail in Section III.B.2., below, RSPA considers that Commerce Clause standards are relevant to a determination whether a fee related to the transportation of hazardous material is ''fair'' within the meaning of 49 U.S.C. 5125(g)(1). Preemption determinations also do not address statutes other than the Federal hazardous material transportation law unless it is necessary to do so in order to determine whether a requirement is authorized by another Federal law. A State, local or Indian tribe requirement is not authorized by another Federal law merely because it is not preempted by another Federal statute. *Colorado Pub. Util. Comm'n* v. *Harmon,* above, 951 F.2d at 1581 n.10.

In making preemption determinations under 49 U.S.C. 5125(d), RSPA is guided by the principles and policy set forth in Executive Order No. 12612, entitled ''Federalism'' (52 FR 41685, Oct. 30, 1987). Section 4(a) of that Executive Order authorizes preemption of State laws only when a statute contains an express preemption provision, there is other firm and palpable evidence of Congressional intent to preempt, or the exercise of State authority directly conflicts with the exercise of Federal authority.[2] Section 5125 contains express preemption provisions, which RSPA has implemented through its regulations.

III. Discussion

A. Standing

In its initial comments, DEC questioned whether AWHMT ''has standing to pursue this petition.'' DEC asserted that AWHMT had not set forth sufficient facts in its application ''to know if the Association has any members that have standing.'' DEC stated that its remedial action fee ''does not apply to the universe of hazardous materials * * * but only to the subset of hazardous waste as defined by the Resource Conservation and Recovery Act (RCRA),'' 42 U.S.C. 6901 *et seq.*, and that

> the fee only applies to persons who 'transport hazardous waste to or from locations within Tennessee.' TDEC Rule 1200–1–11–.04(2)(b)(1) in the Applicant's Attachment C. The fee does not apply to a transporter who passes through the State. [Footnote omitted]

With its rebuttal comments, AWHMT submitted affidavits of two of its members, Environmental Transport Group, Inc., of Flanders, New Jersey, and Tri-State Motor Transit Co., Inc., of Joplin, Missouri. Officials of each of these companies stated that their companies handled numerous shipments of hazardous waste every year that originate, terminate or are temporarily stored during the normal course of transportation in Tennessee. This is sufficient to allow AWHMT to petition for an administrative determination of preemption on behalf of its members. As stated in PD–2(R), Illinois Environmental Protection Agency's Uniform Hazardous Waste Manifest, 58 FR 11176, 11182 (Feb. 23, 1993),

> if [an association's] members do not comply with the IEPA Uniform Hazardous Waste Manifest requirements, they are subject to State enforcement action and to delays of their shipments. Thus, [the association's] members are ''directly affected'' by the Uniform Hazardous Waste Manifest system, and [the association] has standing to apply for this preemption determination.

[1] While advisory in nature, RSPA's inconsistency rulings were ''an alternative to litigation for a determination of the relationship of Federal and State or local requirements'' and also a possible ''basis for an application * * * [for] a waiver of preemption.'' Inconsistency Ruling (IR) No. 2, Rhode Island Rules and Regulations Governing the Transportation of Liquefied Natural Gas and Liquefied Propane Gas, etc., 44 FR 75566, 76657 (Dec. 20, 1979).

[2] On August 4, 1999, the President signed ''Federalism'' Executive Order No. 13132 which becomes effective on November 2, 1999. Although this replaces Executive Order No. 12612, it continues the policy that a Federal agency should find preemption ''only where the [Federal] statute contains an express preemption provision or there is some other clear evidence that the Congress intended preemption of State law, or where the exercise of State authority conflicts with the exercise of Federal authority under the Federal Statute.'' Sec. 4(a), 54 FR 43255, 43257 (Aug. 10, 1999).

Accord, PD–6(R), Michigan Marking Requirements for Vehicles Transporting Hazardous and Liquid Industrial Wastes, 59 FR 6186, 6189 (Feb. 9, 1994) (an association has standing to apply for a determination that Michigan requirements on the transportation of hazardous waste are preempted when its ''members include those who transport hazardous waste in or through Michigan by motor vehicle'').

RSPA finds that AWHMT has standing to apply for a determination that Federal hazardous materials transportation law preempts Tennessee requirements that apply to AWHMT's members that transport hazardous waste within Tennessee.

B. Remedial Action Fee

1. The Fee and its Uses

According to DEC, the remedial action fee mandated by Tennessee Code 68–212–203(a)(6) and DEC Rule 1200–1–13–.03(1)(e) is ''part of the Tennessee superfund program.'' DEC stated that these fees are paid by generators of hazardous waste, transporters of hazardous waste, and facilities that treat or dispose of hazardous waste.[3] DEC indicated that its Division of Superfund collected more than $2.5 million in remedial action fees in 1996, and almost $2.9 million in 1997. In both years, more than 90% of the fees were paid by generators and treatment and disposal facilities; transporters paid $176,800 (about 7% of the fees collected) in 1996, and $168,700 (about 6%) in 1997.

DEC stated that the remedial action fees paid by generators, transporters and treatment and disposal facilities are credited to the Hazardous Waste Remedial Action Fund,[4] which is ''distinct from the state general fund and any unencumbered balance does not revert to the general fund at the end of any fiscal year.'' DEC also advised that, besides these fees, the Hazardous Waste Remediation Fund receives criminal fines and civil penalties for violations of the Tennessee Hazardous Waste Management Act, and the State appropriates $1 million to this fund each year. See Tennessee Code 68–212–203(d), (e).

DEC stated that ''the primary use [of monies in the fund] is as a mechanism for the Department to investigate, contain and clean up 'inactive hazardous substance sites' * * * where disposal of hazardous substance has occurred.'' According to DEC, ''hazardous substance'' has the same meaning as in the Comprehensive Environmental Response, Compensation, and Liability Act (CERCLA), 49 U.S.C. 9601(14), so that this term includes more than hazardous wastes.

DEC indicated that disposal can include ''[a]ny spilling, discharge, or leaking such as can occur during an accident during transportation or during loading and unloading.'' DEC stated that it ''accomplishes these activities through the use of contractors when the liable parties do not do it themselves.'' It indicated that it has separate contracts for emergency response, investigation and engineering, and for remediation. However, according to DEC, ''[t]here has not been a major spill in a transportation-related incident that we have had to address with the superfund.'' It mentioned that, in 1996, it ''used the fund and the emergency response contractor to address incidents on highways,'' at a total cost of $4,300. DEC also referred to two train derailments that resulted in the release of significant amounts of hazardous substances. It stated that, in these latter two cases, the rail transporter paid the direct costs of response and clean-up, and DEC incurred oversight costs that totaled slightly more than $10,000 for both incidents.

In its application, AWHMT challenges Tennessee's remedial action fee on the grounds that it is not ''fair'' and that it is not being used for purposes that are related to the transportation of hazardous material.

2. The Fairness Test

Both AWHMT and DEC have referred to the Commerce Clause as providing the standards for a determination whether the Tennessee remedial action fee is ''fair'' within the meaning of 49 U.S.C. 5125(g)(1). AWHMT contends that, because the remedial action fee is set at a ''flat rate'' for all transporters who pick up or deliver hazardous wastes within Tennessee, it fails to meet the ''internal consistency'' test discussed in *American Trucking Ass'ns* v. *Scheiner,* 483 U.S. 266, 97 S.Ct. 2829 (1987). AWHMT cited the Scheiner case, 483 U.S. at 290–291, as holding that ''because they are unapportioned, flat fees cannot be said to be '' 'fairly related' to a feepayer's level of presence or activities in the fee-assessing jurisdiction.'' It cited four State court decisions in cases also brought by the American Trucking Associations, Inc. (ATA) that ''strike down, enjoin, or escrow flat hazardous materials taxes and fees'': Wisconsin, 556 N.W.2d 761 (Wis. Ct. App.), *review denied,* 560 N.W.2d 274 (1996); Massachusetts, 613 N.E.2d 95 (1993); Maine, 595 A.2d 1014 (1991); and New Jersey, No. 11562–92 (N.J. Tax. Ct., March 11, 1998).[5]

AWHMT also asserted that the DEC remedial action fee is inherently ''unfair'' because of the possible cumulative effect if other jurisdictions charge similar fees:

> Some motor carriers, otherwise in compliance with the HMRs, will inevitably be unable to shoulder multiple flat fees, and thus will be excluded from some sub-set of fee-imposing jurisdictions. If the State's flat fee scheme is allowed to stand, similar fees must be allowed in the Nation's other 30,000 non-federal jurisdictions. The cumulative effect of such outcome would be not only a generally undesirable patchwork of regulations necessary to collect the various fees, but the balkanization of carrier areas of operation and attendant, unnecessary handling of hazardous materials as these materials are transferred from one company to another at jurisdictional borders. The increased transfers would pose a serious risk to safety, since ''the more frequently hazardous material is handled during transportation, the greater the risk of mishap.''[6]

HMAC also argued that a

> flat fee of $650 per year * * * is clearly unfair to interstate carriers. If such fees were to be enacted by other States or jurisdictions, it would lead to assessments on interstate carriers many times the rates paid by local carriers for the same number of miles. A fee of this magnitude applied by 50 States would result in a cost to a single carrier of more than $32,000.

DEC has asserted that its remedial action fee is not unreasonably high because in 1997 transporters paid only about 6% of the total fees collected. DEC stated that its fee does not differentiate between interstate and intrastate

[3] It appears that the amount of fees paid by generators depends upon the amount of hazardous waste generated within the year. DEC Rule 1200–1–13–.03(1)(b). In addition, generators who ship hazardous waste offsite for treatment of disposal also pay an additional fee, also based on the amount of hazardous waste shipped. DEC Rule 1200–1–13–.03(1)(c). Although this additional ''off-site shipping fee'' may be a ''fee related to transporting hazardous material,'' 49 U.S.C. 5125(g)(1), no directly affected person has asked RSPA to determine whether Federal hazardous material transportation law preempts this separate fee imposed on generators.

[4] Although DEC stated initially that this fund is ''officially named the Hazardous Waste Remediation Fund,'' it later referred to the ''Hazardous Waste Remedial Action Fund,'' which is the name specified in Tennessee Code 68–212–204.

[5] After remand by the New Jersey Supreme Court, 713 A.2d 497 (1998), the Appellate Division reversed and remanded this case with directions to the State to apply to DOT for a determination on the fairness of New Jersey's hazardous waste transporter registration fee. Docket No. A–6334–97T3F (June 15, 1999). RSPA understands that the Appellate Division has denied motions for reconsideration of its June 15, 1999 decision and that both ATA and the State of New Jersey have appealed this decision to the New Jersey Supreme Court. AWHMT is affiliated with ATA.

[6] The quoted language is from *Missouri Pac. R.R.* v. *Railroad Comm'n of Texas,* 671 F. Supp. 466, 480–81 (W.D. Tex.)

carriers, because both pay the same $650 amount per year. Although not ''conced[ing] that the fee is a flat fee,'' DEC does ''acknowledge that all of the persons in the small subset of payers who are transporters of hazardous waste all pay the same amount.'' It contended that the *Scheiner* case is not dispositive, regardless of whether the remedial action fee is considered a ''tax'' or a regulatory ''fee.''

DEC stated that, because this fee is not used to pay the government's ''general debts and liabilities,'' it is not a tax, but rather a ''fee'' which is ''charged by the government in connection with the exercise of its police function to help defray costs of the government's provision of a specific service.'' This fee, DEC stated, helps ''defray the State's costs in the establishment and maintenance of a fund used to identify, investigate and remediate sites where there is a release or threatened release of hazardous substances,'' including ''maintaining a capability for emergency response'' when the actual or threatened release results from the transport of hazardous materials.'' It contended that the decisions in *V–1 Oil Co.* v. *Utah State Dept. of Public Safety,* 131 F.3d 1415 (10th Cir. 1997), and *Interstate Towing* v. *Cincinnati,* 6 F.3d 1154 (6th Cir. 1993), hold that uniform fees that are used to perform inspections of LPG facilities (in *V–1 Oil*) or tow trucks (in *Interstate Towing*) do not discriminate against interstate commerce. DEC also referred to *Evansville-Vanderburgh Airport Auth.* v. *Delta Airlines, Inc.,* 405 U.S. 707, 717, 92 S.Ct. 1349, 1355 (1972), as approving a $1.00 charge for each departing passenger on both interstate and intrastate flights as ''a fair, if imperfect, approximation of the use of facilities for whose benefit they are imposed.''

DEC argued that ''tax cases such as *Scheiner*'' do not invalidate its remedial action fee. It stated that ''Tennessee's fee provision does not explicitly treat out-of-state interests differently,'' and that only transporters who pick up or deliver hazardous waste in the State must pay the fee, not all ''truckers who merely enter the State.'' In addition, DEC asserted that there should be no ''concern about burdensome multiple taxation,'' because ''If all the states were to adopt a law identical to Tennessee's, the highest number of them that would assess the fee on a particular shipment would be two, the beginning and terminating states.'' DEC cited *Oklahoma Tax Comm'n* v. *Jefferson Lines, Inc.,* 514 U.S. 175, 115 S.Ct. 1331 (1995), and *Goldberg* v. *Sweet,* 488 U.S. 252, 109 S.Ct. 582 (1989), as situations where two States might permissibly impose taxes on the same interstate transaction, *i.e.,* a telephone call between persons in different States (*Goldberg*) or the purchase of a bus ticket from one State to another (*Jefferson Lines*). DEC maintained that *Scheiner* has not ''invalidated all flat taxes, but rather focused on ''the methods by which the flat taxes are assessed.'' DEC also argues that the remedial action fee ''is apportioned, as much as it can be,'' because

> there is no relation between miles driven and the potential cost of clean up if there is an accident. One of the most significant factors in the expense of a clean-up is the location of the spill, e.g., the proximity to a stream or the nature of the subsurface conditions and whether they impede the migration into ground water. * * * These cases [*Scheiner* and *Goldberg*] show that the commerce clause does not require the adoption of an apportionment formula that does not make sense.

In its rebuttal comments, AWHMT disagreed with each of DEC's arguments. AWHMT stated that the amount of the Tennessee remedial action fee is not reasonable because, except for one other State, it is the highest ''flat, unapportioned'' fee imposed on transporters of hazardous materials, and it is excessive when compared to ''the level of the transporter's instate activity'' or the ''DEC clean-up costs, even if transportation-related.'' AWHMT asserted that mileage ''is plainly relevant to the risk imposed upon the DEC, or the State for that matter, by the transportation of hazardous waste.'' Citing the decisions in the Maine (595 A.2d at 1017) and Massachusetts (613 N.E.2d at 103) cases, AWHMT argued that the factors cited by DEC do not vary between interstate and intrastate carriers and that *Scheiner* requires a State to apportion its fees based on mileage that the interstate carrier travels within the State, unless it is impracticable to do so.

AWHMT also noted that RSPA takes into account the number of high mileage transportation corridors in a State in allocating grants under the Hazardous Materials Emergency Preparedness (HMEP) grants program, carried out in accordance with 49 U.S.C. 5116. AWHMT stated that Tennessee received more than $500,000 from RSPA under the HMEP grant program between 1993 and 1996 (and a total of $19.4 million over the FY '92—FY '96 period in Federal assistance for preparing and responding to transportation emergencies, according to a Department of Energy report).

AWHMT stressed that the remedial action fee is an annual fee, which is the same regardless of the number of shipments into or from Tennessee, and that an interstate carrier is potentially exposed to a cumulative burden of $32,500 if every State adopted a similar fee. It is because the fee is set on an annual basis, rather than per shipment, AWHMT stated, that the fee discriminates against the interstate carrier who ''would pay a fee up to 49 times higher than the intrastate carrier for the same level of total covered operations.''

AWHMT also asserted that the same Commerce Clause standards apply, whether Tennessee calls the remedial action fee a tax or a fee, and that these fees are ''wholly unlike'' the user fees in the *Evansville-Vanderburgh* case and the inspection charges in *V–1 Oil* and *Interstate Towing* because they are not related to the usage of a facility or the services provided by the State. It stated that any language in *Evansville-Vanderburgh* sanctioning ''flat, annual user charges'' (which were not involved in that case) cannot be relied on following the *Scheiner* case. And it disputed DEC's argument that the ''internal consistency'' test should not apply to Tennessee's remedial action fee, stating:

> An interstate carrier faced with the prospect of paying $650 plus permit fees in advance of any contract for at least a single delivery or pickup of waste in Tennessee is subject to pressure to avoid the State altogether. By the same token, if every State implemented a system like the DEC remedial action, Tennessee transporters would be pressured to stay out of interstate commerce. The DEC remedial action fee thus runs squarely afoul of the fundamental Commerce Clause principle that ''revenue measures must maintain state boundaries as a neutral factor in economic decision-making.'' [*Scheiner,* 483 U.S. at 283]

AWHMT also disagreed with DEC's argument that the remedial action fee is justified because the State regulates hazardous waste more closely than it does hazardous substances. According to AWHMT, both must be transported in accordance with the HMR, which requires the use of the Uniform Hazardous Waste Manifest for hazardous wastes (but not other hazardous materials) and refers to the Environmental Protection Agency's requirement that a transporter of hazardous waste clean up any release during transportation. See 49 CFR 171.3 (note), 172.205; 40 CFR Part 263. AWHMT asserted that, ''[i]f environmental protection fee were in fact the goal, this fee would apply to all hazmat carriers, not just hazwaste transporters picking up or delivering hazardous waste in the State.''

In *Evansville-Vanderburgh*, the Supreme Court found that a state or

local ''toll'' would pass muster under the Commerce Clause so long as it ''is based on some fair approximation of use or privilege for use, . . . and is neither discriminatory against interstate commerce nor excessive in comparison with the governmental benefit conferred.'' 405 U.S. at 716–17, 92 S.Ct at 1355. In that case, the Court also indicated that ''a State may impose a flat fee for the privilege of using its roads, without regard to the actual use by particular vehicles, so long as the fee is not excessive.'' 405 U.S. at 715, 92 S.Ct. at 1355. However, in *Scheiner,* the Court limited the application of this latter proposition to those situations where a flat tax is ''the only practicable means of collecting revenues from users and the use of a more finely graduated user-fee schedule would pose genuine administrative burdens.'' 483 U.S. at 296, 107 S.Ct. at 2847. More recently, the Court stated that ''a levy is reasonable under *Evansville* if it (1) is based on some fair approximation of the use of the facilities, (2) is not excessive in relation to the benefits conferred, and (3) does not discriminate against interstate commerce.'' *Northwest Airlines, Inc.* v. *Kent,* 510 U.S. 355, 367–68, 114 S.Ct. 855, 864 (1994).

As a fixed annual fee, regardless of the number of pick-ups or deliveries of hazardous waste within the State, Tennessee's remedial action fee differs from the per-trip fees in *Evansville-Vanderburgh* and from the sales or gross receipts taxes on specific interstate transactions in the *Jefferson Lines* and *Goldberg cases.* It is also different from the fees charged to offset inspections performed by the State in the *V–1 Oil* and *Interstate Trucking* decisions, where the cost of performing a required inspection would be expected to the same amount for both interstate and intrastate companies. There is an absence of any evidence that Tennessee's $650 annual fee has any approximation to transporters' use of roads or other facilities within the State, or that ''genuine administrative burdens'' prevent the application of a more finely graduated user fee to transporters who pick up or deliver hazardous waste within the State. Accordingly, Tennessee's remedial action fee fails the test of ''reasonableness'' in *Evansville-Vanderburgh.*

This test appears to be the most appropriate one for interpreting the fairness requirement in 49 U.S.C. 5125(g)(1). RSPA notes that the House Committee on Energy and Commerce first used the word ''reasonable'' in referring to this requirement, H.R. Report No. 101–444, Part 1, p. 49 (1990), although this evolved into ''equitable'' in the 1990 amendments, Pub. L. 101–615, § 13, 104 Stat. 3260, and then to ''fair'' in the 1994 codification of the Federal hazardous material transportation law. Pub. L 103-272, 108 Stat. 783. As noted by AWHMT, Senator Exon subsequently stated in floor debate that, ''even though the recodification refers to fees that are 'fair' rather than 'equitable,' the usual constitutional commerce clause protections remain applicable and prohibit fees that discriminate or unduly burden interstate commerce.'' Cong. Rec. S11324 (Aug. 11, 1994).

RSPA notes that it is not simply a potential for multiple fees, but the lack of any relationship between the fees paid and the respective benefits received by interstate and intrastate carriers, that establishes discrimination against interstate commerce. As the Massachusetts Supreme Judicial Court stated in the case brought by ATA challenging that State's hazardous waste transporter fee:

> [as] viewed from the perspective of the user, as it must be, it is apparent that the fee does not vary on any ''proxy for value'' obtained from the Commonwealth. An interstate hazardous waste transporter which travels just one time in the Commonwealth must pay the same fee as a local hazardous waste transporter. It is therefore apparent that the ''privilege'' of using the compliance program is more valuable to local transporters so that the practical effect of apportioning total costs on a per vehicle basis is to discriminate against interstate commerce.

415 Mass. at 347, 613 N.E.2d at 102. The Wisconsin Court of Appeals discussed the difference between a tax on ''services provided by disposal facilities'' within the State, which

> would be constitutionally permissible under the Commerce Clause because the tax would be imposed on the delivery of services within the state. Chapter SERB 4 fees are not related to the services provided by in-state disposal facilities to interstate transporters but to carriers who cross the state line to use a facility in Wisconsin. Such fees are not ''apportioned'' in that they are unrelated to the extent of the mileage traveled within the state. Such a flat tax or fee clearly violates the spirit of the Commerce Clause to avoid the economic Balkanization that plagued relations among the Colonies and later among the States under the Articles of Confederation.

556 N.W.2d at 766–67.

The statutory provisions directing DOT to issue Federal regulations governing uniform forms and procedures for State registration and permitting of persons who offer or transport hazardous materials (to be based on the recommendations of a working group) specifically provide that DOT's regulations may ''not define or limit the amounts of a fee a State may impose or collect.'' 49 U.S.C. 5119(c)(1). RSPA ''has never relied on the potential cumulative effect of a [fee] requirement as a basis for finding inconsistency,'' IR–17, Illinois Fee on Transportation of Spent Nuclear Fuel, 51 FR 20926, 20934 (June 9, 1986), although RSPA has previously acknowledged the ''impact of widespread adoption of such fees [may be] relevant to Commerce Clause litigation.'' IR–17, Action on Appeal, 53 FR 36200, 36201 (Sept. 25, 1987). Here, there is no showing that the potential for other States to adopt fees, by itself, makes the Tennessee remedial action fee unfair.

Because Tennessee's remedial action fee imposed on hazardous waste transporters is not based on some fair approximation of the use of the facilities and discriminates against interstate commerce, it is not fair and violates 49 U.S.C. 5125(g)(1) and is preempted by Federal hazardous material transportation law.

3. The ''Used For'' Test

DEC acknowledged that ''many of the situations the fund is used for are not related to transportation,'' but argued that it should not have to create ''two sub-funds, one for transportation incidents and one for everything else.'' If so, DEC claimed, there would be greater total costs for the additional ''staff to administer the program [and] it is quite likely that the transporters would have to pay a much larger fee to support a fund capable of paying the costs of a significant removal and remediation effort at a hazardous substance site.''

DEC refused to concede that ''any money paid by a transporter has actually been paid for any of these other situations or purposes because the fund has not been below $170,000 in the time period of concern.'' It also stated that ''Congress clearly authorized fees such as Tennessee's'' because

> The Hazardous Waste Remedial Action Fund is the only source of funds available to the Department of Environmental Conservation, or the State of Tennessee, which can be used to hire contractors to address emergencies caused by spills of hazardous waste resulting from transportation accidents.

DEC argued that even though it has spent less than $15,000 from this fund in cleaning up highway and rail incidents, ''[i]t just happens that the liable party is doing that work rather than the state's contractor.'' DEC asserted that the fund provides the capability for emergency response, including developing, implementing,

and supervising contracts, and that it is inappropriate to compare receipts and costs in any single year. It stated that ''§ 5125(g) does not require that we look into what events occur in what years with the possible result that the fee would be preempted in some years and not in others.''

DEC contrasts its remedial action fee with the fees charged by Los Angeles County which RSPA found to be preempted in PD–9(R), 60 FR 8774, 8784 (Feb. 15, 1995), petition for reconsideration pending. It stated that the fees considered in PD–9(R) paid for administration of a requirement that businesses plan for emergency response to hazardous materials not in transportation, rather than the State's own capability for emergency response to a transportation incident. DEC also argued that ''what the fees are actually spent on is irrelevant,'' under the *Evansville-Vanderburgh* case and *New Hampshire Motor Transport Ass'n* v. *Flynn,* 751 F.2d 43 (1st Cir. 1984). These cases, according to DEC, show that ''it is permissible under the commerce clause and the HMTA to combine the purposes of a fund.''

In its application, AWHMT asserted that Tennessee's remedial action fee is preempted because none of the uses of the Hazardous Waste Remedial Action Fund ''address enforcement and emergency response for transportation of hazardous materials within the meaning of 49 U.S.C. 5125(g)(1).'' In rebuttal comments, AWHMT questions whether ''inactive hazardous substance sites'' properly include the location of a hazardous material transportation incident, because the carriers are known parties from which the State can recover clean-up costs. It also questioned whether the '' 'clean up' after an emergency has been abated is 'transportation-related' within the meaning of 49 U.S.C. 5125(g)(1).'' AAR agreed that none of the purposes listed in Tennessee Code 68–212–205, for which the fund may be used, ''target transportation activities.'' HMAC stated that, while these monies may be used ''for many worthwhile purposes * * * the use of funds for these activities is not related to the transportation of hazardous material, as required by Federal statute, and therefore not permitted.''

AAR also stated in its rebuttal comments that a ''separate transportation program'' for use of the remedial action fees would not necessarily involve greater costs because ''Tennessee can create a separate program with shared administrative costs.'' AAR argued that, because there is no segregation of the fees paid by transporters of hazardous waste, it is impossible to find that these fees are being used only for transportation purposes, as required by § 5125(g)(1). AAR pointed out that the transporters themselves, rather than the State, have paid the cost of cleaning up train incidents.

With respect to DEC's statement that the Hazardous Waste Remedial Action Fund is the only source of funds available to clean up spills of hazardous waste in transportation, AAR contended that, even if correct, this point is irrelevant:

> Congress did not add a qualification that a State fee would not be preempted if it were the only source of funds for a particular purpose. * * * [T]here is nothing to prohibit Tennessee from developing an emergency response capability utilizing a fee that does not violate the dictates of 49 U.S.C. § 5125(g).

AWHMT referred to the responsibility of transporters to respond to an incident and the Federal financial responsibility requirements in 49 CFR Part 387 to cover environmental damage. It also pointed to Federal assistance, including grants by RSPA under the HMEP program.

In response to DEC's arguments that it had not actually used fees collected from transporters for non-transportation purposes, AWHMT addressed several points. It argued that the fact that the funds are commingled in a single fund precludes a claim of ''non-use,'' that the State may not properly collect fees on transportation and hold them indefinitely because § 5125(g)(1) requires that they be ''used'' for transportation-related activities, and that the total amount collected from transporters is at least $500,000, rather than the $170,000 just for 1996.

CERCLA was enacted ''to provide for a national inventory of inactive hazardous waste sites'' and to authorize EPA ''to take emergency assistance and containment actions with respect to such sites,'' finances by a ''Superfund.'' H.R. Report No. 96–1016, Part I, Interstate and Foreign Commerce Committee, p. 17 (May 16, 1990), as reprinted in 1980 U.S. Code Congressional and Administrative News, pp. 6119–20. In 1986, Congress amended CERCLA to provide additional funding ''to clean up the Nation's worst abandoned hazardous waste sites and uncontrolled leaking underground storage tanks.'' H.R. Report No. 99–253, Part I, Energy and Commerce Committee, p. 54, as reprinted in 1986 U.S. Code Congressional and Administrative News, p. 2836. While an ''inactive'' or ''abandoned'' waste site could result from a release in transportation, it is clear that the primary purpose of the Superfund was not to provide for the cleanup of transportation incidents.

Tennessee acknowledges that the primary purpose of its remedial action fund is similarly to clean up ''inactive hazardous substance sites.'' The State argues that the fund is also available (and is the only source for) cleaning up a release of a hazardous substance in transportation, but it admits that it has spent less than $15,000 in supervising cleanup activities conducted by transporters—out of the approximately $170,000 it collects each year. Without providing specific figures, Tennessee seems to claim that the unspecified excess that has been built up since 1994 is simply being kept in reserve for possible future transportation incidents.

This does not satisfy the requirement in 49 U.S.C. 5125(g)(1) that hazardous material transporter fees must be ''used for a purpose related to transporting hazardous material, including enforcement and planning, developing, and maintaining a capability for emergency response.'' If the State prefers not to create and maintain a separate fund for fees paid by hazardous materials transporters, then it must show that it is actually spending these fees on the purposes permitted by the law. In this area where only the State has the information concerning where these funds are spent, more specific accounting is required. Under section 5125(g)(2)(B), upon RSPA's request, a State must report on ''the purposes for which the revenues from the fee are used.'' In the April 6, 1998 public notice, RSPA asked Tennessee to set forth in detail how much it collected and how it used the fees it collected in fiscal year 1996–97. Although DEC's comments included information on the amounts of remedial action fees collected, the State accounted for less than $15,000 in expenditures. Although it claims that the current balance in the remedial action fund exceeds the amount collected from transporters in any one year, DEC has failed to demonstrate that none of the fees collected from transporters were spent for non-transportation purposes. Nor has it justified imposing fees on transporters of hazardous waste simply to create a large surplus for the future.

Because Tennessee is not using the remedial action fees paid by hazardous waste transporters for purposes related to transporting hazardous material, that fee violates 49 U.S.C. 5125(g)(1) and is preempted by Federal hazardous material transportation law.

C. Written Notification of Incidents

The HMR require a carrier to submit to RSPA, ''within 30 days of the date of discovery,'' a written report of certain incidents that occur during the course of transportation, including any ''unintentional release of hazardous materials from a packaging (including a tank) or [when] any quantity of hazardous waste has been discharged during transportation.'' This report must be submitted on DOT Form F 5800.1 and, when it pertains to a discharge of hazardous waste, a copy of the hazardous waste manifest must be attached, and ''[a]n estimate of the quantity of the waste removed from the scene, the name and address of the facility to which it was taken, and the manner of disposition of any removed waste must be entered in Section IX of the report form.'' 49 CFR 171.16(a).

Section 171.16 was added to the HMR in 1970 in response to a recommendation of the National Transportation Safety Board that DOT develop and establish a uniform system for reporting incidents in the transportation of hazardous materials by all modes. Final Rule, Reports of Hazardous Materials Incidents, 35 FR 16836, 16837 (Oct. 31, 1970); *see also* RSPA's notice of proposed rulemaking (NPRM), 34 FR 17450 (Oct. 29, 1969). In the NPRM, RSPA stated that:

> The information derived from these reports will be used by the Department: (1) As an aid in evaluating the effectiveness of the existing regulations; (2) to assist in determining the need for regulatory changes to cover changing transportation safety problems; and (3) to determine the major problem areas so that the attention of the Department may be more suitably directed to those areas.

Id. In 1989, the time for submitting written incident reports was increased from 15 days to 30 days after the carrier's discovery of the incident, and DOT Form F 5800.1 was revised. Final Rule, Detailed Hazardous Materials Incident Reports, 54 FR 25806, 25813 (June 19, 1989). RSPA has recently begun a new rulemaking proceeding to evaluate the need for any change in the reporting requirements and consider changes to DOT Form F 5800.1 to obtain more useful information and reduce the burdens on the carriers who are required to submit these reports. *See* RSPA's advance notice of proposed rulemaking, 64 FR 13943 (March 23, 1999).

Under DEC Rule 1200–1–11–.04(4)(a)4, a carrier must also send a written report to DEC ''on each hazardous waste discharge during transportation that occurs in'' Tennessee. This written report must be submitted ''[w]ithin fifteen days of occurrence,'' and must include specified information about the discharge, ''a discussion of the cause of the emergency, and a summary of the emergency response (including the treatment or disposition of any spilled waste or contaminated material).'' A copy of the hazardous waste manifest must be included with the report. The note to DEC Rule 1200–1–11.–04(4)(a)4 indicates that a copy of DOT Form F 5800.1 ''shall suffice for this report provided that it is properly completed and supplemented as necessary to include all information required by this paragraph.''

Although AAR contended that DEC requires ''more information [to] be provided'' than on DOT Form F 5800.1, and DEC admitted that its requirement calls for ''additional information to be submitted besides what is required on DOT form 5800.1,'' no party specified what additional information is required. Conceding that its written incident notification requirement is preempted, DEC stated that its ''[s]taff has been advised to amend those rules accordingly.'' In rebuttal comments, AWHMT asserted that DEC has not clarified whether it intends to eliminate its written incident notification requirement or revise that requirement to either be more ''consistent with the data sets on DOT form 5800.1 or otherwise require carriers to provide to the DEC a copy of the DOT form 5800.1.'' DEC Rule 1200–1–11–.04(4)(a)4 has not been revised in the current (March 1999) version of DEC's rules available on the State of Tennessee internet homepage.

Aside from the differing time periods in which the reports must be filed, and issues concerning the information that must be included, AWHMT refers to RSPA's prior holdings that Federal hazardous material transportation law preempts a State requirement for the carrier to directly submit a copy of the incident report form that it must send to RSPA. HMAC states that ''Federal law does not require localities to receive written reports when hazardous waste releases occur within their jurisdiction.''

In IR–2, RSPA contrasted State requirements for submission of follow-up written reports with the separate need for local emergency responders to have immediate oral or telephonic notification of an transportation incident involving hazardous materials. RSPA stated that:

> The written notice required to be supplied to [DOT] pursuant to 49 CFR 171.16 precludes the State from requiring additional written notice directed to hazardous materials carriers. * * * In light of the Federal written notice requirement, however, it is inappropriate for a State to impose an additional written notice requirement to apply solely to carriers already subject to the Hazardous Materials Regulations. The detailed hazardous materials incident reports filed with [DOT] are available to the public.

44 FR at 75568, affirmed on appeal in IR–2(A), 45 FR 71881, 71884 (Oct. 30, 1980), and in *National Tank Truck Carriers, Inc.* v. *Burke*, 535 F. Supp. 509 (D.R.I. 1982), *aff'd*, 698 F.2d 559 (1st Cir. 1983).

In IR–3, Boston Rules Governing Transportation of Certain Hazardous Materials Within the City, 46 FR 18918, 18924 (Mar. 26, 1981), RSPA referred to its earlier decision in IR–2 and the procedures for RSPA to provide to a ''designated State agency'' copies of the written reports required by 49 CFR 171.16. RSPA reiterated its ruling that a State or locality may not require a carrier to directly submit a copy of the DOT Form F 5800.1:

> Subsequent written reports required within 15 days by DOT are not necessary to local emergency response. These reports themselves are publicly available, and [RSPA] is prepared to routinely send copies of written reports to a designated State agency on request. Copies of written reports required by DOT * * * may not be required by [the City's ordinance].

46 FR at 18924. In response to an administrative appeal submitted by the City of Boston, RSPA further explained that:

> the information in a written incident report * * * will very often be of only limited usefulness, is not time-sensitive, and in any event can be obtained by the City [from RSPA] with only a minimum of effort. If the City in fact intends to make serious use of the information in DOT incident reports, the effort to obtain it from [RSPA] rather than the carrier should not be significant. Accordingly, we reaffirm our previous conclusion that Boston's requirement that carriers submit written reports is redundant, unnecessary, and inconsistent with the HMTA and HMR.

IR–3(A), 47 FR 18457, 18462 (Apr. 29, 1982). *Accord*, IR–31, Louisiana Statutes and Regulations on Hazardous Materials Transportation, 55 FR 25572, 25582 (June 21, 1990), appeal dismissed as moot, 57 FR 41165 (Sept. 9, 1992), where RSPA found that

> the provisions of State law which require the submission of *written* accident/incident reports are redundant with Federal requirements (particularly 49 CFR 171.16), tend to undercut compliance with the HMR requirements, and thus are inconsistent. [citations] This rationale also applies to requirements to provide copies of the incident reports filed with [RSPA]; as indicated in IR–3, *supra*, such a requirement is inconsistent, but [RSPA] is prepared to

routinely send copies of those reports to a designated state agency on request.

In the 1990 amendments to the HMTA, Congress provided that non-Federal requirements on written incident notification are preempted unless they are substantively the same as in the HMR. 49 U.S.C. 5125(b)(1)(D). In H.R. Report No. 101–444, Part I, at 34–35 (1990), the House Committee on Energy and Commerce set forth its belief that

> uniform requirements for written notices and reports describing hazardous materials incidents will allow for the development of an improved informational database, which in turn may be used to assess problems in the transportation of hazardous materials. Without consistency in this area, data related to hazardous materials incidents may be misleading and confusing. Additional State and local requirements would also be burdensome on those involved in such incidents and may lead to liability for minor deviations.

DOT has long encouraged States to adopt and enforce requirements for transporting hazardous materials that are consistent with the HMR. Under its Motor Carrier Safety Assistance Program, see 49 CFR Part 350, FHWA provides grants to States that adopt and enforce requirements that are compatible with both the HMR and the FHWA's Federal Motor Carrier Safety Regulations (FMCSR) at 49 CFR Parts 390–399.

Tennessee has adopted the HMR, including 49 CFR 171.16, as State law, Rule 1200–2–1–.32.[7] The State received more than $1.8 million in fiscal year 1999 from DOT to enforce the HMR and the FMCSR. Accordingly, Tennessee may require a carrier to file a written incident report with RSPA, under the same conditions specified in 49 CFR 171.16, and it may impose penalties on a carrier that fails to file the required written incident report with RSPA. Tennessee may also obtain from RSPA copies of incident reports filed by carriers in order to enforce this filing requirement and to conduct follow-up investigations of incidents occurring within the State. In each of these respects, Tennessee is acting ''substantively the same as'' Federal law. However, Tennessee may not require a carrier to file a copy of the DOT Form F 5800.1 report, or a separate incident report, directly with the State. This last requirement is substantively different from the HMR.

DEC Rule 1200–1–11.–04(4)(a)4 is preempted because it is not substantively the same as 49 CFR 171.16.

IV. Ruling

Federal hazardous material transportation law preempts:

1. Tennessee Code 68–212–203(a)(6) and Rule 1200–1–13.03(1)(e), requiring a transporter who picks up or delivers hazardous waste within the State to pay a remedial action fee, currently set at $650 per year.

2. Tennessee Rule 1200–1–11–.04(4)(a)4, requiring a transporter of hazardous waste to submit a written report on a discharge of hazardous waste during transportation.

IV. Petition for Reconsideration/ Judicial Review

In accordance with 49 CFR 107.211(a), ''[a]ny person aggrieved'' by this decision may file a petition for reconsideration within 20 days of publication of this decision in the **Federal Register**. Any party to this proceeding may seek review of RSPA's decision ''in an appropriate district court of the United States * * * not later than 60 days after the decision becomes final.'' 49 U.S.C. 5125(f).

This decision will become RSPA's final decision 20 days after publication in the **Federal Register** if no petition for reconsideration is filed within that time. The filing of a petition for reconsideration is not a prerequisite to seeking judicial review of this decision under 49 U.S.C. 5125(f).

If a petition for reconsideration of this decision is filed within 20 days of publication in the **Federal Register**, the action by RSPA's Associate Administrator for Hazardous Materials Safety on the petition for reconsideration will be RSPA's final decision. 49 CFR 107.211(d).

Issued in Washington, D.C. on September 30, 1999.

Alan I. Roberts,

Associate Administrator for Hazardous Materials Safety.

[FR Doc. 99–26037 Filed 10–5–99; 8:45 am]

BILLING CODE 4910–60–P

[7] Tennessee Code 68–212–107(d) also provides that ''Regulations providing requirements for the transportation, containerization, and labeling of hazardous waste shall be consistent with those issued by the United States department of transportation * * *''

federal register

Wednesday
October 6, 1999

Part VI

Federal Trade Commission

Request for Views on Draft Antitrust Guidelines for Collaborations Among Competitors; Notice

FEDERAL TRADE COMMISSION

REQUEST FOR VIEWS ON DRAFT ANTITRUST GUIDELINES FOR COLLABORATIONS AMONG COMPETITORS

AGENCY: Federal Trade Commission.

ACTION: Notice.

SUMMARY: The Federal Trade Commission (''FTC'' or ''Commission''), in consultation with the Antitrust Division of the U.S. Department of Justice, has drafted Antitrust Guidelines for Collaborations Among Competitors. The Guidelines, if adopted in final form by the FTC and the Department of Justice (''the Agencies''), will state the antitrust enforcement policy of the Agencies with regard to competition issues raised by collaborations among competitors. The Guidelines should enable businesses to evaluate proposed transactions with greater understanding of possible antitrust implications, thus encouraging procompetitive collaborations, deterring collaborations likely to harm competition and consumers, and facilitating the Agencies' investigations of collaborations. The Agencies are issuing the Guidelines in draft form to obtain advice and suggestions from businesses, consumers, and antitrust practitioners that will assist in ensuring that the Guidelines achieve these goals.

DATES: Views should be submitted in writing as specified below by January 5, 2000.

ADDRESSES: To facilitate efficient review, all views should be submitted in written and electronic form. Six hard copies of each submission should be addressed to Donald S. Clark, Office of the Secretary, Federal Trade Commission, 600 Pennsylvania Avenue, N.W., Washington, D.C. 20580. Submissions should be captioned ''Draft Antitrust Guidelines for Collaborations Among Competitors—Submission of Views.'' Electronic submissions may be made in one of two ways. They may be filed on a 3½ inch computer disk, with a label on the disk stating the name of the submitter and the name and version of the word processing program used to create the document. (Programs based on DOS or Windows are preferred. Files from other operating systems should be submitted in ASCII text format.) Alternatively, electronic submissions may be sent by electronic mail to *jventures@ftc.gov*.

FOR FURTHER INFORMATION CONTACT: Policy Planning staff at (202) 326–3712.

SUPPLEMENTARY INFORMATION: The draft Guidelines are a product of the Joint Venture Project initiated by the Commission to determine whether antitrust guidance to the business community could be improved through clarifying and updating antitrust policies regarding joint ventures and other forms of competitor collaboration. The Commission has provided opportunity for public input throughout each stage of the project. *See* 62 FR 22945 (1997) and 62 FR 48660 (1997). If adopted in final form, the draft Guidelines will state the Agencies' antitrust enforcement policy with regard to competition issues raised by collaborations among competitors. They are not intended to create or recognize any legally enforceable right or defense in any person or to affect the admissibility of evidence or in any other way to affect the course or conduct of any present or future litigation.

By direction of the Commission.

Donald S. Clark,

Secretary.

Antitrust Guidelines for Collaborations Among Competitors

Preamble

In order to compete in modern markets, competitors sometimes need to collaborate. Competitive forces are driving firms toward complex collaborations to achieve goals such as expanding into foreign markets, funding expensive innovation efforts, and lowering production and other costs.

Such collaborations often are not only benign but procompetitive. Indeed, in the last two decades, the federal antitrust agencies have brought relatively few civil cases against competitor collaborations. Nevertheless, a perception that antitrust laws are skeptical about agreements among actual or potential competitors may deter the development of procompetitive collaborations.[1]

To provide guidance to business people, the Federal Trade Commission (''FTC'') and the U.S. Department of Justice (''DOJ'') (collectively, ''the Agencies'') previously issued guidelines addressing several special circumstances in which antitrust issues related to competitor collaborations may arise.[2] But none of these Guidelines represents a general statement of the Agencies' analytical approach to competitor collaborations. The increasing varieties and use of competitor collaborations have yielded requests for improved clarity regarding their treatment under the antitrust laws.

The new *Antitrust Guidelines for Collaborations among Competitors (''Competitor Collaboration Guidelines'')* are intended to explain how the Agencies analyze certain antitrust issues raised by collaborations among competitors. Competitor collaborations and the market circumstances in which they operate vary widely. No set of guidelines can provide specific answers to every antitrust question that might arise from a competitor collaboration. These Guidelines describe an analytical framework to assist businesses in assessing the likelihood of an antitrust challenge to a collaboration with one or more competitors. They should enable businesses to evaluate proposed transactions with greater understanding of possible antitrust implications, thus encouraging procompetitive collaborations, deterring collaborations likely to harm competition and consumers, and facilitating the Agencies' investigations of collaborations.

Section 1: Purpose, Definitions, and Overview

1.1 Purpose and Definitions

These Guidelines state the antitrust enforcement policy of the Agencies with respect to competitor collaborations. By stating their general policy, the Agencies hope to assist businesses in assessing whether the Agencies will challenge a competitor collaboration or any of the agreements of which it is comprised.[3] However, these Guidelines cannot remove judgment and discretion in antitrust law enforcement. The Agencies evaluate each case in light of its own facts and apply the analytical framework set forth in these Guidelines reasonably and flexibly.[4]

[1] Congress has protected certain collaborations from full antitrust liability by passing the National Cooperative Research Act of 1984 (''NCRA'') and the National Cooperative Research and Production Act of 1993 (''NCRPA'') (codified together at 15 U.S.C. § § 4301–06). Relatively few participants in research and production collaborations have sought to take advantage of the protections afforded by the NCRA and NCRPA, however.

[2] The *Statements of Antitrust Enforcement Policy in Health Care (''Health Care Statements'')* outline the Agencies' approach to *certain* health care collaborations, among other things. The *Antitrust Guidelines for the Licensing of Intellectual Property (''Intellectual Property Guidelines'')* outline the Agencies' enforcement policy with respect to intellectual property licensing agreements among competitors, among other things. The 1992 DOJ/FTC *Horizontal Merger Guidelines*, as amended in 1997 (''*Horizontal Merger Guidelines*''), outline the Agencies'' approach to horizontal mergers and acquisitions, and certain competitor collaborations.

[3] These Guidelines neither describe how the Agencies litigate cases nor assign burdens of proof or production.

[4] The analytical framework set forth in these Guidelines is consistent with the analytical frameworks in the *Health Care Statements and the Intellectual Property Guidelines*, which remain in effect to address issues in their special contexts.

A ''competitor collaboration'' comprises a set of one or more agreements, other than merger agreements, between or among competitors to engage in economic activity, and the economic activity resulting therefrom.[5] ''Competitors'' include firms that are actual or potential competitors[6] in a relevant market.[7] Competitor collaborations involve one or more business activities, such as research and development (''R&D''), production, marketing, distribution, sales or purchasing. Information sharing and various trade association activities also may take place through competitor collaborations.

These Guidelines use the terms ''anticompetitive harm,'' ''procompetitive benefit,'' and ''overall competitive effect'' in analyzing the competitive effects of agreements among competitors. All of these terms include actual and likely competitive effects. The Guidelines use the term ''anticompetitive harm'' to refer to an agreement's adverse competitive consequences, without taking account of offsetting procompetitive benefits. Conversely, the term ''procompetitive benefit'' refers to an agreement's favorable competitive consequences, without taking account of its anticompetitive harm. The terms ''overall competitive effect'' or ''competitive effect'' are used in discussing the combination of an agreement's anticompetitive harm and procompetitive benefit.

1.2 Overview of Analytical Framework

Two types of analysis are used by the Supreme Court to determine the lawfulness of an agreement among competitors: per se and rule of reason.[8] Certain types of agreements are so likely to harm competition and to have no significant procompetitive benefit that they do not warrant the time and expense required for particularized inquiry into their effects. Once identified, such agreements are challenged as per se unlawful.[9] All other agreements are evaluated under the rule of reason, which involves a factual inquiry into an agreement's overall competitive effect. As the Supreme Court has explained, rule of reason analysis entails a flexible inquiry and varies in focus and detail depending on the nature of the agreement and market circumstances.[10]

This overview briefly sets forth questions and factors that the Agencies assess in analyzing an agreement among competitors. The rest of the Guidelines should be consulted for the detailed definitions and discussion that underlie this analysis.

Agreements Challenged as Per Se Illegal. Agreements of a type that always or almost always tends to raise price or to reduce output are per se illegal. The Agencies challenge such agreements, once identified, as per se illegal. Types of agreements that have been held per se illegal include agreements among competitors to fix prices or output, rig bids, or share or divide markets by allocating customers, suppliers, territories, or lines of commerce. The Department of Justice prosecutes participants in such hard-core cartel agreements criminally. Because the courts conclusively presume such hard-core cartel agreements to be illegal, the Department of Justice treats them as such without inquiring into their claimed business purposes, anticompetitive harms, procompetitive benefits, or overall competitive effects.

Agreements Analyzed under the Rule of Reason. Agreements not challenged as per se illegal are analyzed under the rule of reason to determine their overall competitive effect. These include agreements of a type that otherwise might be considered per se illegal, provided they are reasonably related to, and reasonably necessary to achieve procompetitive benefits from, an efficiency-enhancing integration of economic activity.

Rule of reason analysis focuses on the state of competition with, as compared to without, the relevant agreement. The central question is whether the relevant agreement likely harms competition by increasing the ability or incentive profitably to raise price above or reduce output, quality, service, or innovation below what likely would prevail in the absence of the relevant agreement.

Rule of reason analysis entails a flexible inquiry and varies in focus and detail depending on the nature of the agreement and market circumstances. The Agencies focus on only those factors, and undertake only that factual inquiry, necessary to make a sound determination of the overall competitive effect of the relevant agreement. Ordinarily, however, no one factor is dispositive in the analysis.

The Agencies' analysis begins with an examination of the nature of the relevant agreement. As part of this examination, the Agencies ask about the business purpose of the agreement and examine whether the agreement, if already in operation, has caused anticompetitive harm. In some cases, the nature of the agreement and the absence of market power together may demonstrate the absence of anticompetitive harm. In such cases, the Agencies do not challenge the agreement. Alternatively, where the likelihood of anticompetitive harm is evident from the nature of the agreement, or anticompetitive harm has resulted from an agreement already in operation, then, absent overriding benefits that could offset the anticompetitive harm, the Agencies challenge such agreements without a detailed market analysis.

If the initial examination of the nature of the agreement indicates possible competitive concerns, but the agreement is not one that would be challenged without a detailed market analysis, the Agencies analyze the agreement in greater depth. The Agencies typically define relevant markets and calculate market shares and concentration as an initial step in assessing whether the agreement may create or increase market power or facilitate its exercise. The Agencies examine the extent to which the participants and the collaboration have the ability and incentive to compete independently. The Agencies also evaluate other market circumstances, e.g. entry, that may foster or prevent anticompetitive harms.

If the examination of these factors indicates no potential for anticompetitive harm, the Agencies end the investigation without considering procompetitive benefits. If investigation indicates anticompetitive harm, the Agencies examine whether the relevant agreement is reasonably necessary to achieve procompetitive benefits that likely would offset anticompetitive harms.

1.3 Competitor Collaborations Distinguished from Mergers

The competitive effects from competitor collaborations may differ

[5] These Guidelines do not address the possible exclusionary effects of agreements among competitors that may foreclose or limit competition by rivals.

[6] A firm is treated as a potential competitor if there is evidence that entry by that firm is reasonably probable in the absence of the relevant agreement, or that competitively significant decisions by actual competitors are constrained by concerns that anticompetitive conduct likely would induce the firm to enter.

[7] Firms also may be in a buyer-seller or other relationship, but that does not eliminate the need to examine the competitor relationship, if present.

[8] *See* National Soc'y of Prof'l. Eng'rs v. United States, 435 U.S. 679, 692 (1978).

[9] *See* FTC v. Superior Court Trial Lawyers Ass'n, 493 U.S. 411, 432–36 (1990).

[10] *See* California Dental Ass'n v. FTC, 119 S. Ct. 1604, 1617–18 (1999); FTC v. Indiana Fed'n of Dentists, 476 U.S. 447, 459–61 (1986); National Collegiate Athletic Ass'n v. Board of Regents of the Univ. of Okla., 468 U.S. 85, 104–13 (1984).

from those of mergers due to a number of factors. Mergers completely end competition between the merging parties in the relevant market(s). By contrast, most competitor collaborations preserve some form of competition among the participants. This remaining competition may reduce competitive concerns, but also may raise questions about whether participants have agreed to anticompetitive restraints on the remaining competition.

Mergers are designed to be permanent, while competitor collaborations are more typically of limited duration. Thus, participants in a collaboration typically remain potential competitors, even if they are not actual competitors for certain purposes (*e.g.*, R&D) during the collaboration. The potential for future competition between participants in a collaboration requires antitrust scrutiny different from that required for mergers.

Nonetheless, in some cases, competitor collaborations have competitive effects identical to those that would arise if the participants merged in whole or in part. The Agencies treat a competitor collaboration as a horizontal merger in a relevant market and analyze the collaboration pursuant to the *Horizontal Merger Guidelines* if: (a) The participants are competitors in that relevant market; (b) the formation of the collaboration involves an efficiency-enhancing integration of economic activity in the relevant market; (c) the integration eliminates all competition among the participants in the relevant market; and (d) the collaboration does not terminate within a sufficiently limited period [11] by its own specific and express terms.[12] Effects of the collaboration on competition in other markets are analyzed as appropriate under these Guidelines or other applicable precedent. *See* Example 1.[13]

Section 2: General Principles for Evaluating Agreements Among Competitors

2.1 Potential Procompetitive Benefits

The Agencies recognize that consumers may benefit from competitor collaborations in a variety of ways. For example, a competitor collaboration may enable participants to offer goods or services that are cheaper, more valuable to consumers, or brought to market faster than would be possible absent the collaboration. A collaboration may allow its participants to better use existing assets, or may provide incentives for them to make output-enhancing investments that would not occur absent the collaboration. The potential efficiencies from competitor collaborations may be achieved through a variety of contractual arrangements including joint ventures, trade or professional associations, licensing arrangements, or strategic alliances.

Efficiency gains from competitor collaborations often stem from combinations of different capabilities or resources. For example, one participant may have special technical expertise that usefully complements another participant's manufacturing process, allowing the latter participant to lower its production cost or improve the quality of its product. In other instances, a collaboration may facilitate the attainment of scale or scope economies beyond the reach of any single participant. For example, two firms may be able to combine their research or marketing activities to lower their cost of bringing their products to market, or reduce the time needed to develop and begin commercial sales of new products. Consumers may benefit from these collaborations as the participants are able to lower prices, improve quality, or bring new products to market faster.

2.2 Potential Anticompetitive Harms

Competitor collaborations may harm competition and consumers by increasing the ability or incentive profitably to raise price above or reduce output, quality, service, or innovation below what likely would prevail in the absence of the relevant agreement. Such effects may arise through a variety of mechanisms. Among other things, agreements may limit independent decision making or combine the control of or financial interests in production, key assets, or decisions regarding price, output, or other competitively sensitive variables, or may otherwise reduce the participants' ability or incentive to compete independently.

Competitor collaborations also may facilitate explicit or tacit collusion through facilitating practices such as the exchange or disclosure of competitively sensitive information or through increased market concentration. Such collusion may involve the relevant market in which the collaboration operates or another market in which the participants in the collaboration are actual or potential competitors.

2.3 Analysis of the Overall Collaboration and the Agreements of Which It Consists

A competitor collaboration comprises a set of one or more agreements, other than merger agreements, between or among competitors to engage in economic activity, and the economic activity resulting therefrom. In general, the Agencies assess the competitive effects of the overall collaboration and any individual agreement or set of agreements within the collaboration that may harm competition. For purposes of these Guidelines, the phrase ''relevant agreement'' refers to whichever of these three the evaluating Agency is assessing. Two or more agreements are assessed together if their procompetitive benefits or anticompetitive harms are so intertwined that they cannot meaningfully be isolated and attributed to any individual agreement. *See* Example 2.

2.4 Competitive Effects Are Assessed as of the Time of Possible Harm to Competition

The competitive effects of a relevant agreement may change over time, depending on changes in circumstances such as internal reorganization, adoption of new agreements as part of the collaboration, addition or departure of participants, new market conditions, or changes in market share. The Agencies assess the competitive effects of a relevant agreement as of the time of possible harm to competition, whether at formation of the collaboration or at a later time, as appropriate. *See* Example 3. However, an assessment after a collaboration has been formed is sensitive to the reasonable expectations of participants whose significant sunk cost investments in reliance on the relevant agreement were made before it became anticompetitive.

Section 3: Analytical Framework for Evaluating Agreements Among Competitors

3.1 Introduction

Section 3 sets forth the analytical framework that the Agencies use to evaluate the competitive effects of a competitor collaboration and the agreements of which it consists. Certain types of agreements are so likely to be harmful to competition and to have no significant benefits that they do not warrant the time and expense required for particularized inquiry into their

[11] In general, the Agencies use ten years as a term indicating sufficient permanence to justify treatment of a competitor collaboration as analogous to a merger. The length of this term may vary, however, depending on industry-specific circumstances, such as technology life cycles.

[12] This definition, however, does not determine obligations arising under the Hart-Scott-Rodino Antitrust Improvements Act of 1976, 15 U.S.C. § 18a.

[13] Examples illustrating this and other points set forth in these Guidelines are included in the Appendix.

effects.[14] Once identified, such agreements are challenged as per se illegal.[15]

Agreements not challenged as per se illegal are analyzed under the rule of reason. Rule of reason analysis focuses on the state of competition with, as compared to without, the relevant agreement. Under the rule of reason, the central question is whether the relevant agreement likely harms competition by increasing the ability or incentive profitably to raise price above or reduce output, quality, service, or innovation below what likely would prevail in the absence of the relevant agreement. Given the great variety of competitor collaborations, rule of reason analysis entails a flexible inquiry and varies in focus and detail depending on the nature of the agreement and market circumstances. Rule of reason analysis focuses on only those factors, and undertakes only the degree of factual inquiry, necessary to assess accurately the overall competitive effect of the relevant agreement.[16]

The following sections describe in detail the Agencies' analytical framework.

3.2 Agreements Challenged as Per Se Illegal

Agreements of a type that always or almost always tends to raise price or reduce output are per se illegal.[17] The Agencies challenge such agreements, once identified, as per se illegal. Typically these are agreements not to compete on price or output. Types of agreements that have been held per se illegal include agreements among competitors to fix prices or output, rig bids, or share or divide markets by allocating customers, suppliers, territories or lines of commerce.[18] The Department of Justice prosecutes participants in such hard-core cartel agreements criminally. Because the courts conclusively presume such hard-core cartel agreements to be illegal, the Department of Justice treats them as such without inquiring into their claimed business purposes, anticompetitive harms, procompetitive benefits, or overall competitive effects.

If, however, participants in an efficiency-enhancing integration of economic activity enter into an agreement that is reasonably related to the integration and reasonably necessary to achieve its procompetitive benefits, the Agencies analyze the agreement under the rule of reason, even if it is of a type that might otherwise be considered per se illegal.[19] *See* Example 4. In an efficiency-enhancing integration, participants collaborate to perform or cause to be performed (by a joint venture entity created by the collaboration or by one or more participants or by a third party acting on behalf of other participants) one or more business functions, such as production, distribution, or R&D, and thereby benefit, or potentially benefit, consumers by expanding output, reducing price, or enhancing quality, service, or innovation. Participants in an efficiency-enhancing integration typically combine, by contract or otherwise, significant capital, technology, or other complementary assets to achieve procompetitive benefits that the participants could not achieve separately. The mere coordination of decisions on price, output, customers, territories, and the like is not integration, and cost savings without integration are not a basis for avoiding per se condemnation. The integration must promote procompetitive benefits that are cognizable under the efficiencies analysis set forth in Section 3.36 below. Such procompetitive benefits may enhance the participants' ability or incentives to compete and thus may offset an agreement's anticompetitive tendencies. *See* Examples 5 through 7.

An agreement may be ''reasonably necessary'' without being essential. However, if the participants could achieve an equivalent or comparable efficiency-enhancing integration through practical, significantly less restrictive means, then the Agencies conclude that the agreement is not reasonably necessary.[20] In making this assessment, except in unusual circumstances, the Agencies consider whether practical, significantly less restrictive means were reasonably available when the agreement was entered into, but do not search for a theoretically less restrictive alternative that was not practical given the business realities.

Before accepting a claim that an agreement is reasonably necessary to achieve procompetitive benefits from an integration of economic activity, the Agencies undertake a limited factual inquiry to evaluate the claim.[21] Such an inquiry may reveal that efficiencies from an agreement that are possible in theory are not plausible in the context of the particular collaboration. Some claims—such as those premised on the notion that competition itself is unreasonable—are insufficient as a matter of law,[22] and others may be implausible on their face. In any case, labeling an arrangement a ''joint venture'' will not protect what is merely a device to raise price or restrict output;[23] the nature of the conduct, not its designation, is determinative.

3.3 Agreements Analyzed Under the Rule of Reason

Agreements not challenged as per se illegal are analyzed under the rule of reason to determine their overall competitive effect. Rule of reason analysis focuses on the state of competition with, as compared to without, the relevant agreement. The central question is whether the relevant agreement likely harms competition by increasing the ability or incentive profitably to raise price above or reduce output, quality, service, or innovation below what likely would prevail in the absence of the relevant agreement.[24]

Rule of reason analysis entails a flexible inquiry and varies in focus and detail depending on the nature of the agreement and marketcircumstances.[25] The Agencies focus on only those factors, and undertake only that factual inquiry, necessary to make a sound

[14] *See Continental TV, Inc.* v. *GTE Sylvania Inc.,* 433 U.S. 36, 50 n.16 (1977).

[15] *See Superior Court Trial Lawyers Ass'n,* 493 U.S. at 432–36.

[16] *See California Dental Ass'n,* 119 S. Ct. at 1617–18; *Indiana Fed'n of Dentists,* 476 U.S. at 459–61; *NCAA,* 468 U.S. at 104–13.

[17] *See Broadcast Music, Inc.* v. *Columbia Broadcasting Sys.,* 441 U.S. 1, 19–20 (1979).

[18] *See, e.g., Palmer* v. *BRG of Georgia, Inc.,* 498 U.S. 46 (1990) (market allocation); *United States* v. *Trenton Potteries Co.,* 273 U.S. 392 (1927) (price fixing).

[19] *See Arizona* v. *Maricopa County Medical Soc'y,* 457 U.S. 332, 339 n.7, 356–57 (1982) (finding no integration).

[20] *See id.* at 352–53 (observing that even if a maximum fee schedule for physicians' services were desirable, it was not necessary that the schedule be established by physicians rather than by insurers); *Broadcast Music,* 441 U.S. at 20–21 (setting of price ''necessary'' for the blanket license).

[21] *See Maricopa,* 457 U.S. at 352–53, 356–57 (scrutinizing the defendant medical foundations for indicia of integration and evaluating the record evidence regarding less restrictive alternatives).

[22] *See Indiana Fed'n of Dentists,* 476 U.S. at 463–64; *NCAA,* 468 U.S. at 116–17; *Prof'l. Eng'rs,* 435 U.S. at 693–96. Other claims, such as an absence of market power, are no defense to per se illegality. *See Superior Court Trial Lawyers Ass'n,* 493 U.S. at 434–36; *United States* v. *Socony-Vacuum Oil Co.,* 310 U.S. 150, 224–26 & n.59 (1940).

[23] *See Timken Roller Bearing Co.* v. *United States,* 341 U.S. 593, 598 (1951).

[24] In addition, concerns may arise where an agreement increases the ability or incentive of buyers to exercise monopsony power. *See infra* Section 3.31(a).

[25] *See California Dental Ass'n,* 119 S. Ct. at 1612–13, 1617 (''What is required * * * is an enquiry meet for the case, looking to the circumstances, details, and logic of a restraint.''); NCAA, 468 U.S. 109 n.39 (''the rule of reason can sometimes be applied in the twinkling of an eye'') (quoting Phillip E. Areeda, *The ''Rule of Reason'' in Antitrust Analysis: General Issues* 37–38 (Federal Judicial Center, June 1981)).

determination of the overall competitive effect of the relevant agreement. Ordinarily, however, no one factor is dispositive in the analysis.

Under the rule of reason, the Agencies' analysis begins with an examination of the nature of the relevant agreement, since the nature of the agreement determines the types of anticompetitive harms that may be of concern. As part of this examination, the Agencies ask about the business purpose of the agreement and examine whether the agreement, if already in operation, has caused anticompetitive harm.[26] If the nature of the agreement and the absence of market power[27] together demonstrate the absence of anticompetitive harm, the Agencies do not challenge the agreement. *See* Example 8. Alternatively, where the likelihood of anticompetitive harm is evident from the nature of the agreement,[28] or anticompetitive harm has resulted from an agreement already in operation,[29] then, absent overriding benefits that could offset the anticompetitive harm, the Agencies challenge such agreements without a detailed market analysis.[30]

If the initial examination of the nature of the agreement indicates possible competitive concerns, but the agreement is not one that would be challenged without a detailed market analysis, the Agencies analyze the agreement in greater depth. The Agencies typically define relevant markets and calculate market shares and concentration as an initial step in assessing whether the agreement may create or increase market power[31] or facilitate its exercise and thus poses risks to competition.[32] The Agencies examine factors relevant to the extent to which the participants and the collaboration have the ability and incentive to compete independently, such as whether an agreement is exclusive or non-exclusive and its duration.[33] The Agencies also evaluate whether entry would be timely, likely, and sufficient to deter or counteract any anticompetitive harms. In addition, the Agencies assess any other market circumstances that may foster or impede anticompetitive harms.

If the examination of these factors indicates no potential for anticompetitive harm, the Agencies end the investigation without considering procompetitive benefits. If investigation indicates anticompetitive harm, the Agencies examine whether the relevant agreement is reasonably necessary to achieve procompetitive benefits that likely would offset anticompetitive harms.[34]

3.31 Nature of the Relevant Agreement: Business Purpose, Operation in the Marketplace and Possible Competitive Concerns

The nature of the agreement is relevant to whether it may cause anticompetitive harm. For example, by limiting independent decision making or combining control over or financial interests in production, key assets, or decisions on price, output, or other competitively sensitive variables, an agreement may create or increase market power or facilitate its exercise by the collaboration, its participants, or both. An agreement to limit independent decision making or to combine control or financial interests may reduce the ability or incentive to compete independently. An agreement also may increase the likelihood of an exercise of market power by facilitating explicit or tacit collusion,[35] either through facilitating practices such as an exchange of competitively sensitive information or through increased market concentration.

In examining the nature of the relevant agreement, the Agencies take into account inferences about business purposes for the agreement that can be drawn from objective facts. The Agencies also consider evidence of the subjective intent of the participants to the extent that it sheds light on competitive effects.[36] The Agencies do not undertake a full analysis of procompetitive benefits pursuant to Section 3.36 below, however, unless an anticompetitive harm appears likely. The Agencies also examine whether an agreement already in operation has caused anticompetitive harm.[37] Anticompetitive harm may be observed, for example, if a competitor collaboration successfully mandates new, anticompetitive conduct or successfully eliminates procompetitive pre-collaboration conduct, such as withholding services that were desired by consumers when offered in a competitive market. If anticompetitive harm is found, examination of market power ordinarily is not required. In some cases, however, a determination of anticompetitive harm may be informed by consideration of market power.

The following sections illustrate competitive concerns that may arise from the nature of particular types of competitor collaborations. This list is not exhaustive. In addition, where these sections address agreements of a type that otherwise might be considered per se illegal, such as agreements on price, the discussion assumes that the agreements already have been determined to be subject to rule of reason analysis because they are reasonably related to, and reasonably necessary to achieve procompetitive benefits from, an efficiency-enhancing integration of economic activity. *See supra* Section 3.2.

3.31(a) Relevant Agreements That Limit Independent Decision Making or Combine Control or Financial Interests

The following is intended to illustrate but not exhaust the types of agreements that might harm competition by eliminating independent decision

[26] *See* Board of Trade of the City of Chicago v. United States, 246 U.S. 231, 238 (1918).

[27] That market power is absent may be determined without defining a relevant market. For example, if no market power is likely under any plausible market definition, it does not matter which one is correct.

[28] *See California Dental Ass'n,* 119 S. Ct. at 1612–13, 1617 (an ''obvious anticompetitive effect'' would warrant quick condemnation); *Indiana Fed'n of Dentists,* 476 U.S. at 459; NCAA, 468 U.S. at 104, 106–10.

[29] *See Indiana Fed'n of Dentists,* 476 U.S. at 460–61 (''Since the purpose of the inquiries into market definition and market power is to determine whether an arrangement has the potential for genuine adverse effects on competition, 'proof of actual detrimental effects, such as a reduction of output,' can obviate the need for an inquiry into market power, which is but a 'surrogate for detrimental effects.' '') (quoting 7 Phillip E. Areeda, *Antitrust Law* ¶ 1511, at 424 (1986)); *NCAA,* 468 U.S. at 104–08, 110 n. 42.

[30] *See Indiana Fed'n of Dentists,* 476 U.S. at 459–60 (condemning without ''detailed market analysis'' an agreement to limit competition by withholding x-rays from patients' insurers after finding no competitive justification).

[31] Market power to a seller is the ability profitably to maintain prices above competitive levels for a significant period of time. Sellers also may exercise market power with respect to significant competitive dimensions other than price, such as quality, service, or innovation. Market power to a buyer is the ability profitably to depress the price paid for a product below the competitive level for a significant period of time and thereby depress output.

[32] *See* Eastman Kodak Co. v. Image Technical Services, Inc., 504 U.S. 451, 464 (1992).

[33] *Compare NCAA,* 468 U.S. at 113–15, 119–20 (noting that colleges were not permitted to televise their own games without restraint), *with Broadcast Music,* 441 U.S. at 23–24 (finding no legal or practical impediment to individual licenses).

[34] *See NCAA,* 468 U.S. at 113–15 (rejecting efficiency claims when production was limited, not enhanced); *Prof'l. Eng'rs,* 435 U.S. at 696 (dictum) (distinguishing restraints that promote competition from those that eliminate competition); *Chicago Bd. of Trade,* 246 U.S. at 238 (same).

[35] As used in these Guidelines, ''collusion'' is not limited to conduct that involves an agreement under the antitrust laws.

[36] Anticompetitive intent alone does not establish an antitrust violation, and procompetitive intent does not preclude a violation. *See, e.g., Chicago Bd. of Trade,* 246 U.S. at 238. But extrinsic evidence of intent may aid in evaluating market power, the likelihood of anticompetitive harm, and claimed procompetitive justifications where an agreement's effects are otherwise ambiguous.

[37] *See id.*

making or combining control or financial interests.

Production Collaborations. Competitor collaborations may involve agreements jointly to produce a product sold to others or used by the participants as an input. Such agreements are often procompetitive.[38] Participants may combine complementary technologies, know-how, or other assets to enable the collaboration to produce a good more efficiently or to produce a good that no one participant alone could produce. However, production collaborations may involve agreements on the level of output or the use of key assets, or on the price at which the product will be marketed by the collaboration, or on other competitively significant variables, such as quality, service, or promotional strategies, that can result in anticompetitive harm. Such agreements can create or increase market power or facilitate its exercise by limiting independent decision making or by combining in the collaboration, or in certain participants, the control over some or all production or key assets or decisions about key competitive variables that otherwise would be controlled independently.[39] Such agreements could reduce individual participants' control over assets necessary to compete and thereby reduce their ability to compete independently, combine financial interests in ways that undermine incentives to compete independently, or both.

Marketing Collaborations. Competitor collaborations may involve agreements jointly to sell, distribute, or promote goods or services that are either jointly or individually produced. Such agreements may be procompetitive, for example, where a combination of complementary assets enables products more quickly and efficiently to reach the marketplace. However, marketing collaborations may involve agreements on price, output, or other competitively significant variables, or on the use of competitively significant assets, such as an extensive distribution network, that can result in anticompetitive harm. Such agreements can create or increase market power or facilitate its exercise by limiting independent decision making; by combining in the collaboration, or in certain participants, control over competitively significant assets or decisions about competitively significant variables that otherwise would be controlled independently; or by combining financial interests in ways that undermine incentives to compete independently. For example, joint promotion might reduce or eliminate comparative advertising, thus harming competition by restricting information to consumers on price and other competitively significant variables.

Buying Collaborations. Competitor collaborations may involve agreements jointly to purchase necessary inputs. Many such agreements do not raise antitrust concerns and indeed may be procompetitive. Purchasing collaborations, for example, may enable participants to centralize ordering, to combine warehousing or distribution functions more efficiently, or to achieve other efficiencies. However, such agreements can create or increase market power (which, in the case of buyers, is called ''monopsony power'') or facilitate its exercise by increasing the ability or incentive to drive the price of the purchased product, and thereby depress output, below what likely would prevail in the absence of the relevant agreement. Buying collaborations also may facilitate collusion by standardizing participants' costs or by enhancing the ability to project or monitor a participant's output level through knowledge of its input purchases.

Research & Development Collaborations. Competitor collaborations may involve agreements to engage in joint research and development (''R&D''). Most such agreements are procompetitive, and they typically are analyzed under the rule of reason.[40] Through the combination of complementary assets, technology, or know-how, an R&D collaboration may enable participants more quickly or more efficiently to research and develop new or improved goods, services, or production processes. Joint R&D agreements, however, can create or increase market power or facilitate its exercise by limiting independent decision making or by combining in the collaboration, or in certain participants, control over competitively significant assets or all or a portion of participants' individual competitive R&D efforts. Although R&D collaborations also may facilitate tacit collusion on R&D efforts, achieving, monitoring, and punishing departures from collusion is sometimes difficult in the R&D context.

An exercise of market power may injure consumers by reducing innovation below the level that otherwise would prevail, leading to fewer or no products for consumers to choose from, lower quality products, or products that reach consumers more slowly than they otherwise would. An exercise of market power also may injure consumers by reducing the number of independent competitors in the market for the goods, services, or production processes derived from the R&D collaboration, leading to higher prices or reduced output, quality, or service. A central question is whether the agreement increases the ability or incentive anticompetitively to reduce R&D efforts pursued independently or through the collaboration, for example, by slowing the pace at which R&D efforts are pursued. Other considerations being equal, R&D agreements are more likely to raise competitive concerns when the collaboration or its participants already possess a secure source of market power over an existing product and the new R&D efforts might cannibalize their supracompetitive earnings. In addition, anticompetitive harm generally is more likely when R&D competition is confined to firms with specialized characteristics or assets, such as intellectual property, or when a regulatory approval process limits the ability of late-comers to catch up with competitors already engaged in the R&D.

3.31(b) Relevant Agreements That May Facilitate Collusion

Each of the types of competitor collaborations outlined above can facilitate collusion. Competitor collaborations may provide an opportunity for participants to discuss and agree on anticompetitive terms, or otherwise to collude anticompetitively, as well as a greater ability to detect and punish deviations that would undermine the collusion. Certain marketing, production, and buying collaborations, for example, may provide opportunities for their participants to collude on price, output,

[38] The *NCRPA* accords rule of reason treatment to certain production collaborations. However, the statute permits per se challenges, in appropriate circumstances, to a variety of activities, including agreements to jointly market the goods or services produced or to limit the participants' independent sale of goods or services produced outside the collaboration. *NCRPA*, 15 U.S.C. §§ 4301–02.

[39] For example, where output resulting from a collaboration is transferred to participants for independent marketing, anticompetitive harm could result if that output is restricted or if the transfer takes place at a supracompetitive price. Such conduct could raise participants' marginal costs through inflated per-unit charges on the transfer of the collaboration's output. Anticompetitive harm could occur even if there is vigorous competition among collaboration participants in the output market, since all the participants would have paid the same inflated transfer price.

[40] *See NCRPA*, 15 U.S.C. §§ 4301–02. However, the statute permits per se challenges, in appropriate circumstances, to a variety of activities, including agreements to jointly market the fruits of collaborative R&D or to limit the participants' independent R&D or their sale or licensing of goods, services, or processes developed outside the collaboration. *Id.*

customers, territories, or other competitively sensitive variables. R&D collaborations, however, may be less likely to facilitate collusion regarding R&D activities since R&D often is conducted in secret, and it thus may be difficult to monitor an agreement to coordinate R&D. In addition, collaborations can increase concentration in a relevant market and thus increase the likelihood of collusion among all firms, including the collaboration and its participants.

Agreements that facilitate collusion sometimes involve the exchange or disclosure of information. The Agencies recognize that the sharing of information among competitors may be procompetitive and is often reasonably necessary to achieve the procompetitive benefits of certain collaborations; for example, sharing certain technology, know-how, or other intellectual property may be essential to achieve the procompetitive benefits of an R&D collaboration. Nevertheless, in some cases, the sharing of information related to a market in which the collaboration operates or in which the participants are actual or potential competitors may increase the likelihood of collusion on matters such as price, output, or other competitively sensitive variables. The competitive concern depends on the nature of the information shared. Other things being equal, the sharing of information relating to price, output, costs, or strategic planning is more likely to raise competitive concern than the sharing of information relating to less competitively sensitive variables. Similarly, other things being equal, the sharing of information on current operating and future business plans is more likely to raise concerns than the sharing of historical information. Finally, other things being equal, the sharing of individual company data is more likely to raise concern than the sharing of aggregated data that does not permit recipients to identify individual firm data.

3.32 Relevant Markets Affected by the Collaboration

The Agencies typically identify and assess competitive effects in all of the relevant product and geographic markets in which competition may be affected by a competitor collaboration, although in some cases it may be possible to assess competitive effects directly without defining a particular relevant market(s). Markets affected by a competitor collaboration include all markets in which the economic integration of the participants' operations occurs or in which the collaboration operates or will operate,[41] and may also include additional markets in which any participant is an actual or potential competitor.[42]

3.32(a) Goods Markets

In general, for goods[43] markets affected by a competitor collaboration, the Agencies approach relevant market definition as described in Section 1 of the *Horizontal Merger Guidelines.* To determine the relevant market, the Agencies generally consider the likely reaction of buyers to a price increase and typically ask, among other things, how buyers would respond to increases over prevailing price levels. However, when circumstances strongly suggest that the prevailing price exceeds what likely would have prevailed absent the relevant agreement, the Agencies use a price more reflective of the price that likely would have prevailed. Once a market has been defined, market shares are assigned both to firms currently in the relevant market and to firms that are able to make ''uncommitted'' supply responses. *See* Sections 1.31 and 1.32 of the *Horizontal Merger Guidelines.*

3.32(b) Technology Markets

When rights to intellectual property are marketed separately from the products in which they are used, the Agencies may define technology markets in assessing the competitive effects of a competitor collaboration that includes an agreement to license intellectual property. Technology markets consist of the intellectual property that is licensed and its close substitutes; that is, the technologies or goods that are close enough substitutes significantly to constrain the exercise of market power with respect to the intellectual property that is licensed. The Agencies approach the definition of a relevant technology market and the measurement of market share as described in Section 3.2.2 of the *Intellectual Property Guidelines.*

3.32(c) Research and Development: Innovation Markets

In many cases, an agreement's competitive effects on innovation are analyzed as a separate competitive effect in a relevant goods market. However, if a competitor collaboration may have competitive effects on innovation that cannot be adequately addressed through the analysis of goods or technology markets, the Agencies may define and analyze an innovation market as described in Section 3.2.3 of the *Intellectual Property Guidelines.* An innovation market consists of the research and development directed to particular new or improved goods or processes and the close substitutes for that research and development. The Agencies define an innovation market only when the capabilities to engage in the relevant research and development can be associated with specialized assets or characteristics of specific firms.

3.33 Market Shares and Market Concentration

Market share and market concentration affect the likelihood that the relevant agreement will create or increase market power or facilitate its exercise. The creation, increase, or facilitation of market power will likely increase the ability and incentive profitably to raise price above or reduce output, quality, service, or innovation below what likely would prevail in the absence of the relevant agreement.

Other things being equal, market share affects the extent to which participants or the collaboration must restrict their own output in order to achieve anticompetitive effects in a relevant market. The smaller the percentage of total supply that a firm controls, the more severely it must restrict its own output in order to produce a given price increase, and the less likely it is that an output restriction will be profitable. In assessing whether an agreement may cause anticompetitive harm, the Agencies typically calculate the market shares of the participants and of the collaboration.[44] The Agencies assign a range of market shares to the collaboration. The high end of that range is the sum of the market shares of the collaboration and its participants. The low end is the share of the collaboration in isolation. In general, the Agencies approach the calculation of market share as set forth in Section 1.4 of the *Horizontal Merger Guidelines.*

Other things being equal, market concentration affects the difficulties and

[41] For example, where a production joint venture buys inputs from an upstream market to incorporate in products to be sold in a downstream market, both upstream and downstream markets may be ''markets affected by a competitor collaboration.''

[42] Participation in the collaboration may change the participants' behavior in this third category of markets, for example, by altering incentives and available information, or by providing an opportunity to form additional agreements among participants.

[43] The term ''goods'' also includes services.

[44] When the competitive concern is that a limitation on independent decision making or a combination of control or financial interests may yield an anticompetitive reduction of research and development, the Agencies typically frame their inquiries more generally, looking to the strength, scope, and number of competing R&D efforts and their close substitutes. *See supra* Sections 3.31(a) and 3.32(c).

costs of achieving and enforcing collusion in a relevant market. Accordingly, in assessing whether an agreement may increase the likelihood of collusion, the Agencies calculate market concentration. In general, the Agencies approach the calculation of market concentration as set forth in Section 1.5 of the *Horizontal Merger Guidelines,* ascribing to the competitor collaboration the same range of market shares described above.

Market share and market concentration provide only a starting point for evaluating the competitive effect of the relevant agreement. The Agencies also examine other factors outlined in the *Horizontal Merger Guidelines* as set forth below:

The Agencies consider whether factors such as those discussed in Section 1.52 of the *Horizontal Merger Guidelines* indicate that market share and concentration data overstate or understate the likely competitive significance of participants and their collaboration.

In assessing whether anticompetitive harm may arise from an agreement that combines control over or financial interests in assets or otherwise limits independent decision making, the Agencies consider whether factors such as those discussed in Section 2.2 of the *Horizontal Merger Guidelines* suggest that anticompetitive harm is more or less likely.

In assessing whether anticompetitive harms may arise from an agreement that may increase the likelihood of collusion, the Agencies consider whether factors such as those discussed in Section 2.1 of the *Horizontal Merger Guidelines* suggest that anticompetitive harm is more or less likely.

In evaluating the significance of market share and market concentration data and interpreting the range of market shares ascribed to the collaboration, the Agencies also examine factors beyond those set forth in the *Horizontal Merger Guidelines*. The following section describes which factors are relevant and the issues that the Agencies examine in evaluating those factors.

3.34 Factors Relevant to the Ability and Incentive of the Participants and the Collaboration to Compete

Competitor collaborations sometimes do not end competition among the participants and the collaboration. Participants may continue to compete against each other and their collaboration, either through separate, independent business operations or through membership in other collaborations. Collaborations may be managed by decision makers independent of the individual participants. Control over key competitive variables may remain outside the collaboration, such as where participants independently market and set prices for the collaboration's output.

Sometimes, however, competition among the participants and the collaboration may be restrained through explicit contractual terms or through financial or other provisions that reduce or eliminate the incentive to compete. The Agencies look to the competitive benefits and harms of the relevant agreement, not merely the formal terms of agreements among the participants.

Where the nature of the agreement and market share and market concentration data reveal a likelihood of anticompetitive harm, the Agencies more closely examine the extent to which the participants and the collaboration have the ability and incentive to compete independent of each other. The Agencies are likely to focus on six factors: (a) The extent to which the relevant agreement is non-exclusive in that participants are likely to continue to compete independently outside the collaboration in the market in which the collaboration operates; (b) the extent to which participants retain independent control of assets necessary to compete; (c) the nature and extent of participants' financial interests in the collaboration or in each other; (d) the control of the collaboration's competitively significant decision making; (e) the likelihood of anticompetitive information sharing; and (f) the duration of the collaboration.

Each of these factors is discussed in further detail below. Consideration of these factors may reduce or increase competitive concern. The analysis necessarily is flexible: the relevance and significance of each factor depends upon the facts and circumstances of each case, and any additional factors pertinent under the circumstances are considered. For example, when an agreement is examined subsequent to formation of the collaboration, the Agencies also examine factual evidence concerning participants' actual conduct.

3.34(a) Exclusivity

The Agencies consider whether, to what extent, and in what manner the relevant agreement permits participants to continue to compete against each other and their collaboration, either through separate, independent business operations or through membership in other collaborations. The Agencies inquire whether a collaboration is non-exclusive in fact as well as in name and consider any costs or other impediments to competing with the collaboration. In assessing exclusivity when an agreement already is in operation, the Agencies examine whether, to what extent, and in what manner participants actually have continued to compete against each other and the collaboration. In general, competitive concern likely is reduced to the extent that participants actually have continued to compete, either through separate, independent business operations or through membership in other collaborations, or are permitted to do so.

3.34(b) Control Over Assets

The Agencies ask whether the relevant agreement requires participants to contribute to the collaboration significant assets that previously have enabled or likely would enable participants to be effective independent competitors in markets affected by the collaboration. If such resources must be contributed to the collaboration and are specialized in that they cannot readily be replaced, the participants may have lost all or some of their ability to compete against each other and their collaboration, even if they retain the contractual right to do so.[45] In general, the greater the contribution of specialized assets to the collaboration that is required, the less the participants may be relied upon to provide independent competition.

3.34(c) Financial Interests in the Collaboration or in Other Participants

The Agencies assess each participant's financial interest in the collaboration and its potential impact on the participant's incentive to compete independently with the collaboration. The potential impact may vary depending on the size and nature of the financial interest (*e.g.,* whether the financial interest is debt or equity). In general, the greater the financial interest in the collaboration, the less likely is the participant to compete with the collaboration.[46] The Agencies also assess direct equity investments between or among the participants. Such investments may reduce the incentives of the participants to compete with each other. In either case, the analysis is sensitive to the level of financial interest in the collaboration or in another participant relative to the

[45] For example, if participants in a production collaboration must contribute most of their productive capacity to the collaboration, the collaboration may impair the ability of its participants to remain effective independent competitors regardless of the terms of the agreement.

[46] Similarly, a collaboration's financial interest in a participant may diminish the collaboration's incentive to compete with that participant.

level of the participant's investment in its independent business operations in the markets affected by the collaboration.

3.34(d) Control of the Collaboration's Competitively Significant Decision Making

The Agencies consider the manner in which a collaboration is organized and governed in assessing the extent to which participants and their collaboration have the ability and incentive to compete independently. Thus, the Agencies consider the extent to which the collaboration's governance structure enables the collaboration to act as an independent decision maker. For example, the Agencies ask whether participants are allowed to appoint members of a board of directors for the collaboration, if incorporated, or otherwise to exercise significant control over the operations of the collaboration. In general, the collaboration is less likely to compete independently as participants gain greater control over the collaboration's price, output, and other competitively significant decisions.[47]

To the extent that the collaboration's decision making is subject to the participants' control, the Agencies consider whether that control could be exercised jointly. Joint control over the collaboration's price and output levels could create or increase market power and raise competitive concerns. Depending on the nature of the collaboration, competitive concern also may arise due to joint control over other competitively significant decisions, such as the level and scope of R&D efforts and investment. In contrast, to the extent that participants independently set the price and quantity [48] of their share of a collaboration's output and independently control other competitively significant decisions, an agreement's likely anticompetitive harm is reduced.[49]

3.34(e) Likelihood of Anticompetitive Information Sharing

The Agencies evaluate the extent to which competitively sensitive information concerning markets affected by the collaboration likely would be disclosed. This likelihood depends on, among other things, the nature of the collaboration, its organization and governance, and safeguards implemented to prevent or minimize such disclosure. For example, participants might refrain from assigning marketing personnel to an R&D collaboration, or, in a marketing collaboration, participants might limit access to competitively sensitive information regarding their respective operations to only certain individuals or to an independent third party. Similarly, a buying collaboration might use an independent third party to handle negotiations in which its participants' input requirements or other competitively sensitive information could be revealed. In general, it is less likely that the collaboration will facilitate collusion on competitively sensitive variables if appropriate safeguards governing information sharing are in place.

3.34(f) Duration of the Collaboration

The Agencies consider the duration of the collaboration in assessing whether participants retain the ability and incentive to compete against each other and their collaboration. In general, the shorter the duration, the more likely participants are to compete against each other and their collaboration.

3.35 Entry

Easy entry may deter or prevent profitably maintaining price above, or output, quality, service or innovation below, what likely would prevail in the absence of the relevant agreement. Where the nature of the agreement and market share and concentration data suggest a likelihood of anticompetitive harm that is not sufficiently mitigated by any continuing competition identified through the analysis in Section 3.34, the Agencies inquire whether entry would be timely, likely, and sufficient in its magnitude, character and scope to deter or counteract the anticompetitive harm of concern. If so, the relevant agreement ordinarily requires no further analysis.

As a general matter, the Agencies assess timeliness, likelihood, and sufficiency of committed entry under principles set forth in Section 3 of the *Horizontal Merger Guidelines.*[50] However, unlike mergers, competitor collaborations often restrict only certain business activities, while preserving competition among participants in other respects, and they may be designed to terminate after a limited duration. Consequently, the extent to which an agreement creates opportunities that would induce entry and the conditions under which ease of entry may deter or counteract anticompetitive harms may be more complex and less direct than for mergers and will vary somewhat according to the nature of the relevant agreement. For example, the likelihood of entry may be affected by what potential entrants believe about the probable duration of an anticompetitive agreement. Other things being equal, the shorter the anticipated duration of an anticompetitive agreement, the smaller the profit opportunities for potential entrants, and the lower the likelihood that it will induce committed entry. Examples of other differences are set forth below.

For certain collaborations, sufficiency of entry may be affected by the possibility that entrants will participate in the anticompetitive agreement. To the extent that such participation raises the amount of entry needed to deter or counteract anticompetitive harms, and assets required for entry are not adequately available for entrants to respond fully to their sales opportunities, or otherwise renders entry inadequate in magnitude, character or scope, sufficient entry may be more difficult to achieve.[51]

---

[47] Control may diverge from financial interests. For example, a small equity investment may be coupled with a right to veto large capital expenditures and, thereby, to effectively limit output. The Agencies examine a collaboration's actual governance structure in assessing issues of control.

[48] Even if prices to consumers are set independently, anticompetitive harms may still occur if participants jointly set the collaboration's level of output. For example, participants may effectively coordinate price increases by reducing the collaboration's level of output and collecting their profits through high transfer prices, *i.e.,* through the amounts that participants contribute to the collaboration in exchange for each unit of the collaboration's output. Where a transfer price is determined by reference to an objective measure not under the control of the participants, (*e.g.,* average price in a different unconcentrated geographic market), competitive concern may be less likely.

[49] Anticompetitive harm also is less likely if individual participants may independently increase the overall output of the collaboration.

[50] Committed entry is defined as new competition that requires expenditure of significant sunk costs of entry and exit. *See* Section 3.0 of the *Horizontal Merger Guidelines.*

[51] Under the same principles applied to production and marketing collaborations, the exercise of monopsony power by a buying collaboration may be deterred or counteracted by the entry of new purchasers. To the extent that collaborators reduce their purchases, they may create an opportunity for new buyers to make purchases without forcing the price of the input above pre-relevant agreement levels. Committed purchasing entry, defined as new purchasing competition that requires expenditure of significant sunk costs of entry and exit—such as a new steel factory built in response to a reduction in the price of iron ore—is analyzed under principles analogous to those articulated in Section 3 of the *Horizontal Merger Guidelines.* Under that analysis, the Agencies assess whether a monopsonistic price reduction is likely to attract committed purchasing entry, profitable at pre-relevant agreement prices, that would not have occurred before the relevant agreement at those same prices. (Uncommitted new buyers are identified as participants in the relevant market if their demand responses to a price decrease are likely to occur within one year and without the expenditure of significant sunk costs of entry and exit. *See id.* at Sections 1.32 and 1.41.)

In the context of research and development collaborations, widespread availability of R&D capabilities and the large gains that may accrue to successful innovators often suggest a high likelihood that entry will deter or counteract anticompetitive reductions of R&D efforts. Nonetheless, such conditions do not always pertain, and the Agencies ask whether entry may deter or counteract anticompetitive R&D reductions, taking into account the following:

Where market participants typically can observe the level and type of R&D efforts within a market, the principles of Section 3 of the *Horizontal Merger Guidelines* may be applied flexibly to determine whether entry is likely to deter or counteract a lessening of the quality, diversity, or pace of research and development. To be timely, entry must be sufficiently prompt to deter or counteract such harms. The Agencies evaluate the likelihood of entry based on the extent to which potential entrants have (1) core competencies (and the ability to acquire any necessary specialized assets) that give them the ability to enter into competing R&D and (2) incentives to enter into competing R&D in response to a post-collaboration reduction in R&D efforts. The sufficiency of entry depends on whether the character and scope of the entrants' R&D efforts are close enough to the reduced R&D efforts to be likely to achieve similar innovations in the same time frame or otherwise to render a collaborative reduction of R&D unprofitable.

Where market participants typically cannot observe the level and type of R&D efforts by others within a market, there may be significant questions as to whether entry would occur in response to a collaborative lessening of the quality, diversity, or pace of research and development, since such effects would not likely be observed. In such cases, the Agencies may conclude that entry would not deter or counteract anticompetitive harms.

3.36 Identifying Procompetitive Benefits of the Collaboration

Competition usually spurs firms to achieve efficiencies internally. Nevertheless, as explained above, competitor collaborations have the potential to generate significant efficiencies that benefit consumers in a variety of ways. For example, a competitor collaboration may enable firms to offer goods or services that are cheaper, more valuable to consumers, or brought to market faster than would otherwise be possible. Efficiency gains from competitor collaborations often stem from combinations of different capabilities or resources. *See supra* Section 2.1. Indeed, the primary benefit of competitor collaborations to the economy is their potential to generate such efficiencies.

Efficiencies generated through a competitor collaboration can enhance the ability and incentive of the collaboration and its participants to compete, which may result in lower prices, improved quality, enhanced service, or new products. For example, through collaboration, competitors may be able to produce an input more efficiently than any one participant could individually; such collaboration-generated efficiencies may enhance competition by permitting two or more ineffective (*e.g.,* high cost) participants to become more effective, lower cost competitors. Even when efficiencies generated through a competitor collaboration enhance the collaboration's or the participants' ability to compete, however, a competitor collaboration may have other effects that may lessen competition and ultimately may make the relevant agreement anticompetitive.

If the Agencies conclude that the relevant agreement has caused, or is likely to cause, anticompetitive harm, they consider whether the agreement is reasonably necessary to achieve ''cognizable efficiencies.'' ''Cognizable efficiencies'' are efficiencies that have been verified by the Agencies, that do not arise from anticompetitive reductions in output or service, and that cannot be achieved through practical, significantly less restrictive means. *See infra* Sections 3.36(a) and 3.36(b). Cognizable efficiencies are assessed net of costs produced by the competitor collaboration or incurred in achieving those efficiencies.

3.36(a) Cognizable Efficiencies Must Be Verifiable and Potentially Procompetitive

Efficiencies are difficult to verify and quantify, in part because much of the information relating to efficiencies is uniquely in the possession of the collaboration's participants. Moreover, efficiencies projected reasonably and in good faith by the participants may not be realized. Therefore, the participants must substantiate efficiency claims so that the Agencies can verify by reasonable means the likelihood and magnitude of each asserted efficiency; how and when each would be achieved; any costs of doing so; how each would enhance the collaboration's or its participants' ability and incentive to compete; and why the relevant agreement is reasonably necessary to achieve the claimed efficiencies (*see* Section 3.36 (b)). Efficiency claims are not considered if they are vague or speculative or otherwise cannot be verified by reasonable means.

Moreover, cognizable efficiencies must be potentially procompetitive. Some asserted efficiencies, such as those premised on the notion that competition itself is unreasonable, are insufficient as a matter of law. Similarly, cost savings that arise from anticompetitive output or service reductions are not treated as cognizable efficiencies. *See* Example 9.

3.36(b) Reasonable Necessity and Less Restrictive Alternatives

The Agencies consider only those efficiencies for which the relevant agreement is reasonably necessary. An agreement may be ''reasonably necessary'' without being essential. However, if the participants could have achieved or could achieve similar efficiencies by practical, significantly less restrictive means, then the Agencies conclude that the relevant agreement is not reasonably necessary to their achievement. In making this assessment, the Agencies consider only alternatives that are practical in the business situation faced by the participants; the Agencies do not search for a theoretically less restrictive alternative that is not realistic given business realities.

The reasonable necessity of an agreement may depend upon the market context and upon the duration of the agreement. An agreement that may be justified by the needs of a new entrant, for example, may not be reasonably necessary to achieve cognizable efficiencies in different market circumstances. The reasonable necessity of an agreement also may depend on whether it deters individual participants from undertaking free riding or other opportunistic conduct that could reduce significantly the ability of the collaboration to achieve cognizable efficiencies. Collaborations sometimes include agreements to discourage any one participant from appropriating an undue share of the fruits of the collaboration or to align participants' incentives to encourage cooperation in achieving the efficiency goals of the collaboration. The Agencies assess whether such agreements are reasonably necessary to deter opportunistic conduct that otherwise would likely prevent the achievement of cognizable efficiencies. *See* Example 10.

3.37 Overall Competitive Effect

If the relevant agreement is reasonably necessary to achieve cognizable

efficiencies, the Agencies assess the likelihood and magnitude of cognizable efficiencies and anticompetitive harms to determine the agreement's overall actual or likely effect on competition in the relevant market. To make the requisite determination, the Agencies consider whether cognizable efficiencies likely would be sufficient to offset the potential of the agreement to harm consumers in the relevant market, for example, by preventing price increases.[52]

The Agencies' comparison of cognizable efficiencies and anticompetitive harms is necessarily an approximate judgment. In assessing the overall competitive effect of an agreement, the Agencies consider the magnitude and likelihood of both the anticompetitive harms and cognizable efficiencies from the relevant agreement. The likelihood and magnitude of anticompetitive harms in a particular case may be insignificant compared to the expected cognizable efficiencies, or vice versa. As the expected anticompetitive harm of the agreement increases, the Agencies require evidence establishing a greater level of expected cognizable efficiencies in order to avoid the conclusion that the agreement will have an anticompetitive effect overall. When the anticompetitive harm of the agreement is likely to be particularly large, extraordinarily great cognizable efficiencies would be necessary to prevent the agreement from having an anticompetitive effect overall.

Section 4: Antitrust Safety Zones

4.1 Overview

Because competitor collaborations are often procompetitive, the Agencies believe that ''safety zones'' are useful in order to encourage such activity. The safety zones set out below are designed to provide participants in a competitor collaboration with a degree of certainty in those situations in which anticompetitive effects are so unlikely that the Agencies presume the arrangements to be lawful without inquiring into particular circumstances. They are not intended to discourage competitor collaborations that fall outside the safety zones.

The Agencies emphasize that competitor collaborations are not anticompetitive merely because they fall outside the safety zones. Indeed, many competitor collaborations falling outside the safety zones are procompetitive or competitively neutral. The Agencies analyze arrangements outside the safety zones based on the principles outlined in Section 3 above.

The following sections articulate two safety zones. Section 4.2 sets out a general safety zone applicable to any competitor collaboration.[53] Section 4.3 establishes a safety zone applicable to research and development collaborations whose competitive effects are analyzed within an innovation market. These safety zones are intended to supplement safety zone provisions in the Agencies' other guidelines and statements of enforcement policy.[54]

4.2 Safety Zone for Competitor Collaborations in General

Absent extraordinary circumstances, the Agencies do not challenge a competitor collaboration when the market shares of the collaboration and its participants collectively account for no more than twenty percent of each relevant market in which competition may be affected.[55] The safety zone, however, does not apply to agreements that are per se illegal, or that would be challenged without a detailed market analysis,[56] or to competitor collaborations to which a merger analysis is applied.[57]

4.3 Safety Zone for Research and Development Competition Analyzed in Terms of Innovation Markets

Absent extraordinary circumstances, the Agencies do not challenge a competitor collaboration on the basis of effects on competition in an innovation market where three or more independently controlled research efforts in addition to those of the collaboration possess the required specialized assets or characteristics and the incentive to engage in R&D that is a close substitute for the R&D activity of the collaboration. In determining whether independently controlled R&D efforts are close substitutes, the Agencies consider, among other things, the nature, scope, and magnitude of the R&D efforts; their access to financial support; their access to intellectual property, skilled personnel, or other specialized assets; their timing; and their ability, either acting alone or through others, to successfully commercialize innovations. The antitrust safety zone does not apply to agreements that are per se illegal, or that would be challenged without a detailed market analysis,[58] or to competitor collaborations to which a merger analysis is applied.[59]

Appendix

Section 1.3

Example 1 (Competitor Collaboration/ Merger)

Facts

Two oil companies agree to integrate all of their refining and refined product marketing operations. Under terms of the agreement, the collaboration will expire after twelve years; prior to that expiration date, it may be terminated by either participant on six months' prior notice. The two oil companies maintain separate crude oil production operations.

Analysis

The formation of the collaboration involves an efficiency-enhancing integration of operations in the refining and refined product markets, and the integration eliminates all competition between the participants in those markets. The evaluating Agency likely would conclude that expiration after twelve years does not constitute termination ''within a sufficiently limited period.'' The participants'' entitlement to terminate the collaboration at any time after giving prior notice is not termination by the

[52] In most cases, the Agencies' enforcement decisions depend on their analysis of the overall effect of the relevant agreement over the short term. The Agencies also will consider the effects of cognizable efficiencies with no short-term, direct effect on prices in the relevant market. Delayed benefits from the efficiencies (due to delay in the achievement of, or the realization of consumer benefits from, the efficiencies) will be given less weight because they are less proximate and more difficult to predict.

[53] *See* Sections 1.1 and 1.3 above.

[54] The Agencies have articulated antitrust safety zones in *Health Care Statements* 7 & 8 and the *Intellectual Property Guidelines*, as well as in the *Horizontal Merger Guidelines*. The antitrust safety zones in these other guidelines relate to particular facts in a specific industry or to particular types of transactions.

[55] For purposes of the safety zone, the Agencies consider the combined market shares of the participants and the collaboration. For example, with a collaboration among two competitors where each participant individually holds a 6 percent market share in the relevant market and the collaboration separately holds a 3 percent market share in the relevant market, the combined market share in the relevant market for purposes of the safety zone would be 15 percent. This collaboration, therefore, would fall within the safety zone. However, if the collaboration involved three competitors, each with a 6 percent market share in the relevant market, the combined market share in the relevant market for purposes of the safety zone would be 21 percent, and the collaboration would fall outside the safety zone. Including market shares of the participants takes into account possible spillover effects on competition within the relevant market among the participants and their collaboration.

[56] *See supra* notes 28–30 and accompanying text in Section 3.3.

[57] *See* Section 1.3 above.

[58] *See supra* notes 28–30 and accompanying text in Section 3.3.

[59] *See* Section 1.3 above.

collaboration's ''own specific and express terms.'' Based on the facts presented, the evaluating Agency likely would analyze the collaboration under the *Horizontal Merger Guidelines,* rather than as a competitor collaboration under these Guidelines. Any agreements restricting competition on crude oil production would be analyzed under these Guidelines.

Section 2.3

Example 2 (Analysis of Individual Agreements/Set of Agreements)

Facts

Two firms enter a joint venture to develop and produce a new software product to be sold independently by the participants. The product will be useful in two areas, biotechnology research and pharmaceuticals research, but doing business with each of the two classes of purchasers would require a different distribution network and a separate marketing campaign. Successful penetration of one market is likely to stimulate sales in the other by enhancing the reputation of the software and by facilitating the ability of biotechnology and pharmaceutical researchers to use the fruits of each other's efforts. Although the software is to be marketed independently by the participants rather than by the joint venture, the participants agree that one will sell only to biotechnology researchers and the other will sell only to pharmaceutical researchers. The participants also agree to fix the maximum price that either firm may charge. The parties assert that the combination of these two requirements is necessary for the successful marketing of the new product. They argue that the market allocation provides each participant with adequate incentives to commercialize the product in its sector without fear that the other participant will free-ride on its efforts and that the maximum price prevents either participant from unduly exploiting its sector of the market to the detriment of sales efforts in the other sector.

Analysis

The evaluating Agency would assess overall competitive effects associated with the collaboration in its entirety and with individual agreements, such as the agreement to allocate markets, the agreement to fix maximum prices, and any of the sundry other agreements associated with joint development and production and independent marketing of the software. From the facts presented, it appears that the agreements to allocate markets and to fix maximum prices may be so intertwined that their benefits and harms ''cannot meaningfully be isolated.'' The two agreements arguably operate together to ensure a particular blend of incentives to achieve the potential procompetitive benefits of successful commercialization of the new product. Moreover, the effects of the agreement to fix maximum prices may mitigate the price effects of the agreement to allocate markets. Based on the facts presented, the evaluating Agency likely would conclude that the agreements to allocate markets and to fix maximum prices should be analyzed as a whole.

Section 2.4

Example 3 (Time of Possible Harm to Competition)

Facts

A group of 25 small-to-mid-size banks formed a joint venture to establish an automatic teller machine network. To ensure sufficient business to justify launching the venture, the joint venture agreement specified that participants would not participate in any other ATM networks. Numerous other ATM networks were forming in roughly the same time period.

Over time, the joint venture expanded by adding more and more banks, and the number of its competitors fell. Now, ten years after formation, the joint venture has 900 member banks and controls 60% of the ATM outlets in a relevant geographic market. Following complaints from consumers that ATM fees have rapidly escalated, the evaluating Agency assesses the rule barring participation in other ATM networks, which now binds 900 banks.

Analysis

The circumstances in which the venture operates have changed over time, and the evaluating Agency would determine whether the exclusivity rule now harms competition. In assessing the exclusivity rule's competitive effect, the evaluating Agency would take account of the collaboration's substantial current market share and any procompetitive benefits of exclusivity under present circumstances, along with other factors discussed in Section 3.

Section 3.2

Example 4 (Agreement Not to Compete on Price)

Facts

Net-Business and Net-Company are two start-up companies. Each has developed and begun sales of software for the networks that link users within a particular business to each other and, in some cases, to entities outside the business. Both Net-Business and Net-Company were formed by computer specialists with no prior business expertise, and they are having trouble implementing marketing strategies, distributing their inventory, and managing their sales forces. The two companies decide to form a partnership joint venture, NET–FIRM, whose sole function will be to market and distribute the network software products of Net-Business and Net-Company. NET–FIRM will be the exclusive marketer of network software produced by Net-Business and Net-Company. Net-Business and Net-Company will each have 50% control of NET–FIRM, but each will derive profits from NET–FIRM in proportion to the revenues from sales of that partner's products. The documents setting up NET–FIRM specify that Net-Business and Net-Company will agree on the prices for the products that NET–FIRM will sell.

Analysis

Net-Business and Net-Company will agree on the prices at which NET–FIRM will sell their individually-produced software. The agreement is one ''not to compete on price,'' and it is of a type that always or almost always tends to raise price or reduce output. The agreement to jointly set price may be challenged as per se illegal, unless it is reasonably related to, and reasonably necessary to achieve procompetitive benefits from, an efficiency-enhancing integration of economic activity.

Example 5 (Specialization without Integration)

Facts

Firm A and Firm B are two of only three producers of automobile carburetors. Minor engine variations from year to year, even within given models of a particular automobile manufacturer, require re-design of each year's carburetor and re-tooling for carburetor production. Firms A and B meet and agree that henceforth Firm A will design and produce carburetors only for automobile models of even-numbered years and Firm B will design and produce carburetors only for automobile models of odd-numbered years. Some design and re-tooling costs would be saved, but automobile manufacturers would face only two suppliers each year, rather than three.

Analysis

The agreement allocates sales by automobile model year and constitutes an agreement ''not to compete on * * * output.'' The participants do not combine production; rather, the

collaboration consists solely of an agreement *not* to produce certain carburetors. The mere coordination of decisions on output is not integration, and cost-savings without integration, such as the costs saved by refraining from design and production for any given model year, are not a basis for avoiding per se condemnation. The agreement is of a type so likely to harm competition and to have no significant benefits that particularized inquiry into its competitive effect is deemed by the antitrust laws not to be worth the time and expense that would be required. Consequently, the evaluating Agency likely would conclude that the agreement is *per se* illegal.

Example 6 (Efficiency-Enhancing Integration Present)

Facts

Compu-Max and Compu-Pro are two major producers of a variety of computer software. Each has a large, world-wide sales department. Each firm has developed and sold its own word-processing software. However, despite all efforts to develop a strong market presence in word processing, each firm has achieved only slightly more than a 10% market share, and neither is a major competitor to the two firms that dominate the word-processing software market.

Compu-Max and Compu-Pro determine that in light of their complementary areas of design expertise they could develop a markedly better word-processing program together than either can produce on its own. Compu-Max and Compu-Pro form a joint venture, WORD–FIRM, to jointly develop and market a new word-processing program, with expenses and profits to be split equally. Compu-Max and Compu-Pro both contribute to WORD–FIRM software developers experienced with word processing.

Analysis

Compu-Max and Compu-Pro have combined their word-processing design efforts, reflecting complementary areas of design expertise, in a common endeavor to develop new word-processing software that they could not have developed separately. Each participant has contributed significant assets—the time and know-how of its word-processing software developers—to the joint effort. Consequently, the evaluating Agency likely would conclude that the joint word-processing software development project is an efficiency-enhancing integration of economic activity that promotes procompetitive benefits.

Example 7 (Efficiency-Enhancing Integration Absent)

Facts

Each of the three major producers of flashlight batteries has a patent on a process for manufacturing a revolutionary new flashlight battery—the Century Battery—that would last 100 years without requiring recharging or replacement. There is little chance that another firm could produce such a battery without infringing one of the patents. Based on consumer surveys, each firm believes that aggregate profits will be less if all three sold the Century Battery than if all three sold only conventional batteries, but that any one firm could maximize profits by being the first to introduce a Century Battery. All three are capable of introducing the Century Battery within two years, although it is uncertain who would be first to market.

One component in all conventional batteries is a copper widget. An essential element in each producers' Century Battery would be a zinc, rather than a copper widget. Instead of introducing the Century Battery, the three producers agree that their batteries will use only copper widgets. Adherence to the agreement precludes any of the producers from introducing a Century Battery.

Analysis

The agreement to use only copper widgets is merely an agreement not to produce any zinc-based batteries, in particular, the Century Battery. It is ''an agreement not to compete on * * * output'' and is ''of a type that always or almost always tends to raise price or reduce output.'' The participants do not collaborate to perform any business functions, and there are no procompetitive benefits from an efficiency-enhancing integration of economic activity. The evaluating Agency likely would challenge the agreement to use only copper widgets as *per se* illegal.

Section 3.3

Example 8 (Rule-of-Reason: Agreement Quickly Exculpated)

Facts

Under the facts of Example 4, Net-Business and Net-Company jointly market their independently-produced network software products through NET–FIRM. Those facts are changed in one respect: rather than jointly setting the prices of their products, Net-Business and Net-Company will each independently specify the prices at which its products are to be sold by NET–FIRM. The participants explicitly agree that each company will decide on the prices for its own software independently of the other company. The collaboration also includes a requirement that NET–FIRM compile and transmit to each participant quarterly reports summarizing any comments received from customers in the course of NET–FIRM's marketing efforts regarding the desirable/undesirable features of and desirable improvements to (1) that participant's product and (2) network software in general. Sufficient provisions are included to prevent the company-specific information reported to one participant from being disclosed to the other, and those provisions are followed. The information pertaining to network software in general is to be reported simultaneously to both participants.

Analysis

Under these revised facts, there is no agreement ''not to compete on price or output.'' Absent any agreement of a type that always or almost always tends to raise price or reduce output, and absent any subsequent conduct suggesting that the firms did not follow their explicit agreement to set prices independently, no aspect of the partnership arrangement might be subjected to *per se* analysis. Analysis would continue under the rule of reason.

The information disclosure arrangements provide for the sharing of a very limited category of information: customer-response data pertaining to network software in general. Collection and sharing of information of this nature is unlikely to increase the ability or incentive of Net-Business or Net-Company to raise price or reduce output, quality, service, or innovation. There is no evidence that the disclosure arrangements have caused anticompetitive harm and no evidence that the prohibitions against disclosure of firm-specific information have been violated. Under any plausible relevant market definition, Net-Business and Net-Company have small market shares, and there is no other evidence to suggest that they have market power. In light of these facts, the evaluating Agency would refrain from further investigation.

Section 3.36(a)

Example 9 (Cost Savings from Anticompetitive Output or Service Reductions)

Facts

Two widget manufacturers enter a marketing collaboration. Each will continue to manufacture and set the

price for its own widget, but the widgets will be promoted by a joint sales force. The two manufacturers conclude that through this collaboration they can increase their profits using only half of their aggregate pre-collaboration sales forces by (1) taking advantage of economies of scale—presenting both widgets during the same customer call—and (2) refraining from time-consuming demonstrations highlighting the relative advantages of one manufacturer's widgets over the other manufacturer's widgets. Prior to their collaboration, both manufacturers had engaged in the demonstrations.

Analysis

The savings attributable to economies of scale would be cognizable efficiencies. In contrast, eliminating demonstrations that highlight the relative advantages of one manufacturer's widgets over the other manufacturer's widgets deprives customers of information useful to their decision making. Cost savings from this source arise from an anticompetitive output or service reduction and would not be cognizable efficiencies.

Section 3.36(b)

Example 10 (Efficiencies From Restrictions on Competitive Independence)

Facts

Under the facts of Example 6, Compu-Max and Compu-Pro decide to collaborate on developing and marketing word-processing software. The firms agree that neither one will engage in R&D for designing word-processing software outside of their WORD–FIRM joint venture. Compu-Max papers drafted during the negotiations cite the concern that absent a restriction on outside word-processing R&D, Compu-Pro might withhold its best ideas, use the joint venture to learn Compu-Max's approaches to design problems, and then use that information to design an improved word-processing software product on its own. Compu-Pro's files contain similar documents regarding Compu-Max.

Compu-Max and Compu-Pro further agree that neither will sell its previously designed word-processing program once their jointly developed product is ready to be introduced. Papers in both firms' files, dating from the time of the negotiations, state that this latter restraint was designed to foster greater trust between the participants and thereby enable the collaboration to function more smoothly. As further support, the parties point to a recent failed collaboration involving other firms who sought to collaborate on developing and selling a new spread-sheet program while independently marketing their older spread-sheet software.

Analysis

The restraints on outside R&D efforts and on outside sales both restrict the competitive independence of the participants and could cause competitive harm. The evaluating Agency would inquire whether each restraint is reasonably necessary to achieve cognizable efficiencies. In the given context, that inquiry would entail an assessment of whether, by aligning the participants' incentives, the restraints in fact are reasonably necessary to deter opportunistic conduct that otherwise would likely prevent achieving cognizable efficiency goals of the collaboration.

With respect to the limitation on independent R&D efforts, possible alternatives might include agreements specifying the level and quality of each participant's R&D contributions to WORD–FIRM or requiring the sharing of all relevant R&D. The evaluating Agency would assess whether any alternatives would permit each participant to adequately monitor the scope and quality of the other's R&D contributions and whether they would effectively prevent the misappropriation of the other participant's know-how. In some circumstances, there may be no ''practical, significantly less restrictive'' alternative.

Although the agreement prohibiting outside sales might be challenged as *per se* illegal if not reasonably necessary for achieving the procompetitive benefits of the integration discussed in Example 6, the evaluating Agency likely would analyze the agreement under the rule of reason if it could not adequately assess the claim of reasonable necessity through limited factual inquiry. As a general matter, participants' contributions of marketing assets to the collaboration could more readily be monitored than their contributions of know-how, and neither participant may be capable of misappropriating the other's marketing contributions as readily as it could misappropriate know-how. Consequently, the specification and monitoring of each participant's marketing contributions could be a ''practical, significantly less restrictive'' alternative to prohibiting outside sales of pre-existing products. The evaluating Agency, however, would examine the experiences of the failed spread-sheet collaboration and any other facts presented by the parties to better assess whether such specification and monitoring would likely enable the achievement of cognizable efficiencies.

[FR Doc. 99–26032 Filed 10–5–99; 8:45 am]

BILLING CODE 6750–01–P

Reader Aids

Federal Register

Vol. 64, No. 193

Wednesday, October 6, 1999

CUSTOMER SERVICE AND INFORMATION

Federal Register/Code of Federal Regulations

General Information, indexes and other finding aids	**202–523–5227**
Laws	**523–5227**
Presidential Documents	
Executive orders and proclamations	**523–5227**
The United States Government Manual	**523–5227**
Other Services	
Electronic and on-line services (voice)	**523–4534**
Privacy Act Compilation	**523–3187**
Public Laws Update Service (numbers, dates, etc.)	**523–6641**
TTY for the deaf-and-hard-of-hearing	**523–5229**

ELECTRONIC RESEARCH

World Wide Web

Full text of the daily Federal Register, CFR and other publications:

http://www.access.gpo.gov/nara

Federal Register information and research tools, including Public Inspection List, indexes, and links to GPO Access:

http://www.nara.gov/fedreg

E-mail

PENS (Public Law Electronic Notification Service) is an E-mail service for notification of recently enacted Public Laws. To subscribe, send E-mail to

listserv@www.gsa.gov

with the text message:

subscribe PUBLAWS-L your name

Use listserv@www.gsa.gov only to subscribe or unsubscribe to PENS. We cannot respond to specific inquiries.

Reference questions. Send questions and comments about the Federal Register system to:

info@fedreg.nara.gov

The Federal Register staff cannot interpret specific documents or regulations.

FEDERAL REGISTER PAGES AND DATE, OCTOBER

53179–53580 1
53581–53882 4
53883–54198 5
54199–54498 6

CFR PARTS AFFECTED DURING OCTOBER

At the end of each month, the Office of the Federal Register publishes separately a List of CFR Sections Affected (LSA), which lists parts and sections affected by documents published since the revision date of each title.

3 CFR

Proclamations:
4865 (see Memorandum of April 16, 1999) 53883
7227 53877
7228 54193
7229 54195
7230 54197

Executive Orders:
11145 (See 13138).....53879
11183 (See 13138).....53879
11287 (See 13138).....53879
12131 (Amended by 13138) 53880
12196 (See 13138).....53879
12216 (See 13138).....53879
12345 (Amended by 13138) 53879
12367 (Amended by 13138) 53879
12382 (See 13138).....53879
12852 (Revoked by 13138) 53880
12871 (See 13138).....53879
12876 (See 13138).....53879
12882 (See 13138).....53879
12900 (See 13138).....53879
12905 (See 13138).....53879
12961 (Revoked by 13138) 53880
12994 (See 13138).....53879
13010 (Revoked in part by 13138).....53880
13017 (Revoked by 13138) 53880
13021 (See 13138).....53879
13037 (Revoked by 13138) 53880
13038 (Revoked by 13138) 53880
13050 (Revoked by 13138) 53880
13062 (Superseded in part by 13138).....53880
13115 (Amended by 13138) 53880
13138 53879
13139 54175

Administrative Orders:
Presidential Determinations:
No. 99–38 of September 21, 1999 53573
No. 99–39 of September 21, 1999 53575
No. 99–40 of September 21, 1999 53577
No. 99–41 of September 22, 1999 53579
Memorandums:
April 16, 1999 53883

5 CFR

532 53179
831 53581
842 53581

7 CFR

915 53181
923 53885
944 53181
1000 53885
1001 53885
1002 53885
1004 53885
1005 53885
1006 53885
1007 53885
1012 53885
1013 53885
1030 53885
1032 53885
1033 53885
1036 53885
1040 53885
1044 53885
1046 53885
1049 53885
1050 53885
1064 53885
1065 53885
1068 53885
1076 53885
1079 53885
1106 53885
1124 53885
1126 53885
1131 53885
1134 53885
1135 53885
1137 53885
1138 53885
1139 53885
1755 53886

9 CFR

317 53186
381 53186

10 CFR

50 53582
72 53582
431 54114

Proposed Rules:
50 53270

12 CFR

204 53617
262 53188

14 CFR

39 .....53189, 53191, 53193,

53620, 53621, 53623, 53625, 54199, 54200, 54202
71 .....53627, 53887, 53888, 53889, 53890, 53891, 53892, 53893, 53894, 53895, 53896, 53898, 53899, 54203, 54204, 54205, 54206
93.....53558
Proposed Rules:
39 .....53275, 53951, 53953, 54227, 54229, 54230, 54232, 54234, 54237, 54239, 54240, 54242, 54246, 54248, 54249
71.....53956, 53957
193.....53958
450.....54448

15 CFR

Proposed Rules:
30.....53861
732.....53854
740.....53854
743.....53854
748.....53854
750.....53854
752.....53854
758.....53854
762.....53854
772.....53854

17 CFR

210.....53900
228.....53900
229.....53900
230.....53900
239.....53900
240.....53900
249.....53900
260.....53900

18 CFR

Proposed Rules:
385.....53959

19 CFR

122.....53627

21 CFR

50.....54180
178.....53925
312.....54180
558.....53926
878.....53927
900.....53195
Proposed Rules:
5.....53281
25.....53281
314.....53960
500.....53281
510.....53281
558.....53281
601.....53960
880.....53294

22 CFR

514.....53928
Proposed Rules:
194.....53632

24 CFR

200.....53930
882.....53868
888.....53450

28 CFR

Proposed Rules:
571.....53872

30 CFR

250.....53195
948.....53200
950.....53202
Proposed Rules:
250.....53298

32 CFR

1800.....53769

33 CFR

100.....53208, 53628
117.....53209
Proposed Rules:
20.....53970
175.....53971
165.....54242

34 CFR

Proposed Rules:
75.....54254

36 CFR

Proposed Rules:
217.....59074
219.....59074

37 CFR

Proposed Rules:
1.....53772
3.....53772
5.....53772
10.....53772

38 CFR

3.....54206
17.....54207
Proposed Rules:
20.....53302

39 CFR

Proposed Rules:
111.....54255

40 CFR

52.....53210, 53931
61.....53212
180.....54218
300.....53213, 53629
Proposed Rules:
52.....53303, 53973
122.....53304
123.....53304
124.....53304
130.....53304
131.....53304
132.....53632
197.....53304
258.....53976

42 CFR

Proposed Rules:
57.....54263
58.....54263
447.....54263

43 CFR

1820.....53213
3500.....53512
3510.....53512
3520.....53512
3530.....53512
3540.....53512
3550.....53512
3560.....53512
3570.....53512
3800.....53213

44 CFR

65 .....53931, 53933, 53936
67.....53938, 53939
Proposed Rules:
67.....53980, 53982

46 CFR

1.....53220
2.....53220
4.....53220
10.....53220, 53230
12.....53230
15.....53220
31.....53220
34.....53220
38.....53220
52.....53220
53.....53220
54.....53220
56.....53220
57.....53220
58.....53220
59.....53220
61.....53220
63.....53220
64.....53220
67.....53220
68.....53220
69.....53220
76.....53220
91.....53220
95.....53220
98.....53220
105.....53220
107.....53220
108.....53220
109.....53220
118.....53220
125.....53220
133.....53220
147.....53220
151.....53220
153.....53220
160.....53220
161.....53220
162.....53220
167.....53220
169.....53220
177.....53220
181.....53220
189.....53220
193.....53220
197.....53220
199.....53220
Proposed Rules:
5.....53970

47 CFR

1.....53231
13.....53231
22.....53231
64.....53242, 53944
73.....54224, 54225
80.....53231
87.....53231
90.....53231
95.....53231
97.....53231
101.....53231
Proposed Rules:
54.....53648
61.....53648
69.....53648
73 .....53655, 54268, 54269, 54270

48 CFR

1.....53264
15.....53264
19.....53264
52.....53264
237.....53447
Proposed Rules:
1804.....54270
1812.....54270
1852.....54270

49 CFR

1002.....53264
1003.....53264
1007.....53264
1011.....53264
1012.....53264
1014.....53264
1017.....53264
1018.....53264
1019.....53264
1021.....53264
1034.....53264
1039.....53264
1100.....53264
1101.....53264
1103.....53264
1104.....53264
1105.....53264
1113.....53264
1133.....53264
1139.....53264
1150.....53264
1151.....53264
1152.....53264
1177.....53264
1180.....53264
1184.....53264

50 CFR

216.....53269
635.....53949
679 .....53630, 53950, 54225
Proposed Rules:
17.....53655
660.....54272
679.....53305

REMINDERS

The items in this list were editorially compiled as an aid to Federal Register users. Inclusion or exclusion from this list has no legal significance.

RULES GOING INTO EFFECT OCTOBER 6, 1999

ENVIRONMENTAL PROTECTION AGENCY

Pesticides; tolerances in food, animal feeds, and raw agricultural commodities:

Imazapic-ammonium; published 10-6-99

TRANSPORTATION DEPARTMENT

Federal Aviation Administration

Airworthiness directives:

Dornier; published 9-1-99

Short Brothers; published 9-1-99

COMMENTS DUE NEXT WEEK

AGRICULTURE DEPARTMENT

Animal and Plant Health Inspection Service

Animal welfare:

Nonhuman primates; policy; comments due by 10-13-99; published 9-7-99

Poultry improvement:

National Poultry Improvement Plan and auxiliary provisions—

Plan participants and participating flocks; new program classifications and new or modified sampling and testing procedures; comments due by 10-12-99; published 8-10-99

AGRICULTURE DEPARTMENT

Food and Nutrition Service

Child nutrition programs:

Women, infants, and children; special supplemental nutrition program—

Vendor management systems; mandatory selection criteria, limitation of vendors, training requirements high-risk vendors identification criteria, etc.; comments due by 10-14-99; published 9-2-99

COMMERCE DEPARTMENT

National Oceanic and Atmospheric Administration

Fishery conservation and management:

Alaska; fisheries of Exclusive Economic Zone—

Pollock; comments due by 10-12-99; published 9-30-99

Northeastern United States fisheries—

Northeast multispecies and Atlantic sea scallop; comments due by 10-12-99; published 9-10-99

DEFENSE DEPARTMENT

Banks, credit unions, and other financial institutions on DoD installations; procedures; comments due by 10-12-99; published 8-11-99

Federal Acquisition Regulation (FAR):

Information technology; interagency acquisition by executive agent; comments due by 10-12-99; published 8-12-99

Financial institutions on DoD installations; comments due by 10-12-99; published 8-11-99

Privacy Act; implementation

Defense Security Service; comments due by 10-14-99; published 9-14-99

DEFENSE DEPARTMENT

Engineers Corps

Navigation regulations:

St. Marys Falls Canal and Soo Locks, MI; administration and navigation; comments due by 10-15-99; published 8-31-99

ENERGY DEPARTMENT

Classified matter or special nuclear material; criteria and procedures for determining access eligibility; comments due by 10-15-99; published 8-16-99

ENVIRONMENTAL PROTECTION AGENCY

Air programs:

Fuel and fuel additives—

California; enforcement exemptions for reformulated gasoline; extension; comments due by 10-15-99; published 9-15-99

California; enforcement exemptions for reformulated gasoline; extension; comments due by 10-15-99; published 9-15-99

Air quality implementation plans; approval and promulgation; various States:

Delaware; comments due by 10-12-99; published 9-9-99

Illinois; comments due by 10-13-99; published 9-13-99

Kentucky; comments due by 10-13-99; published 9-13-99

New Jersey; comments due by 10-12-99; published 9-9-99

Tennessee; comments due by 10-13-99; published 9-13-99

Hazardous waste program authorizations:

Tennessee; comments due by 10-15-99; published 9-15-99

Texas; comments due by 10-14-99; published 9-14-99

FEDERAL COMMUNICATIONS COMMISSION

Common carrier services:

Telecommunications Act of 1996; implementation—

Customer proprietary network information and other customer information; local competition provisions and directory assistance; comments due by 10-13-99; published 9-27-99

Telecommunications Act of l996; implementation—

Competitive networks promotion in local telecommunications markets; comments due by 10-12-99; published 9-13-99

Radio stations; table of assignments:

New Mexico; comments due by 10-12-99; published 8-31-99

Various States; comments due by 10-12-99; published 8-31-99

FEDERAL HOUSING FINANCE BOARD

Unpublished information availability; comments due by 10-12-99; published 8-13-99

FEDERAL TRADE COMMISSION

Trade regulation rules:

Amplifiers utilized in home entertainment products; power output claims; comments due by 10-15-99; published 9-21-99

GENERAL SERVICES ADMINISTRATION

Federal Acquisition Regulation (FAR):

Information technology; interagency acquisition by executive agent; comments due by 10-12-99; published 8-12-99

HEALTH AND HUMAN SERVICES DEPARTMENT

Food and Drug Administration

Food additives:

Secondary direct food additives—

Acidified sodium chlorite solutions; comments due by 10-15-99; published 9-15-99

Human drugs:

Current good manufacturing practices—

Positron emission tomography drug products; comments due by 10-13-99; published 9-22-99

HOUSING AND URBAN DEVELOPMENT DEPARTMENT

Public and Indian housing:

Public Housing Capital Fund Program; formula allocation funding system; comments due by 10-14-99; published 9-14-99

INTERIOR DEPARTMENT

Indian Affairs Bureau

Land and water:

Land held in trust for benefit of Indian Tribes and individual Indians; title acquisition; comments due by 10-12-99; published 9-14-99

INTERIOR DEPARTMENT

Land Management Bureau

Land resource management:

Rights-of-way—

Principles and procedures, and Mineral Leasing Act; comments due by 10-13-99; published 6-15-99

INTERIOR DEPARTMENT

Fish and Wildlife Service

Endangered and threatened species:

California bighorn sheep; Sierra Nevada distinct population segment; comments due by 10-15-99; published 9-30-99

Golden sedge; comments due by 10-15-99; published 8-16-99

Scaleshell mussel; comments due by 10-12-99; published 8-13-99

INTERIOR DEPARTMENT

National Park Service

Concession contracts; solicitation, award, and administration; comments due by 10-15-99; published 8-30-99

INTERIOR DEPARTMENT

Surface Mining Reclamation and Enforcement Office

Permanent program and abandoned mine land reclamation plan submissions:

Indiana; comments due by 10-15-99; published 9-15-99

Louisiana; comments due by 10-12-99; published 9-10-99

JUSTICE DEPARTMENT

Privacy Act; implementation; comments due by 10-12-99; published 9-10-99

NATIONAL AERONAUTICS AND SPACE ADMINISTRATION

Federal Acquisition Regulation (FAR):

Information technology; interagency acquisition by executive agent; comments due by 10-12-99; published 8-12-99

NATIONAL ARCHIVES AND RECORDS ADMINISTRATION

Records management:

Agency records centers; storage standard update; comments due by 10-15-99; published 9-15-99

NUCLEAR REGULATORY COMMISSION

Byproduct material; domestic licensing:

Industrial devices containing byproduct material, generally licensed; requirements; comments due by 10-12-99; published 7-26-99

Special nuclear material; domestic licensing:

Critical mass possession; public health and environmental safety measures; comments due by 10-13-99; published 7-30-99

Spent nuclear fuel and high-level radioactive waste; independent storage; licensing requirements:

Approved spent fuel storage casks; list addition; comments due by 10-12-99; published 7-29-99

TRANSPORTATION DEPARTMENT

Coast Guard

Drawbridge operations:

Connecticut; comments due by 10-12-99; published 8-13-99

New Jersey; comments due by 10-12-99; published 8-13-99

TRANSPORTATION DEPARTMENT

Federal Aviation Administration

Airworthiness directives:

Aerospatiale; comments due by 10-12-99; published 9-10-99

Airbus; comments due by 10-12-99; published 9-10-99

Boeing; comments due by 10-15-99; published 8-31-99

British Aerospace; comments due by 10-15-99; published 9-15-99

Dornier; comments due by 10-14-99; published 9-14-99

International Aero Engines AG; comments due by 10-15-99; published 9-15-99

Learjet; comments due by 10-14-99; published 8-30-99

McDonnell Douglas; comments due by 10-14-99; published 8-30-99

Raytheon; comments due by 10-12-99; published 9-10-99

Robinson Helicopter Co.; comments due by 10-12-99; published 8-11-99

Saab; comments due by 10-13-99; published 9-13-99

Airworthiness standards:

Special conditions—

Cessna Aircraft Co. Model 525A airplane; comments due by 10-13-99; published 9-13-99

New Piper Aircraft, Inc. Meridian PA-46-400TP airplane; comments due by 10-13-99; published 9-13-99

Class E airspace; comments due by 10-11-99; published 8-27-99

Class E airspace; correction; comments due by 10-11-99; published 9-3-99

TRANSPORTATION DEPARTMENT

National Highway Traffic Safety Administration

Consumer information:

Seat belt positioners; comments due by 10-12-99; published 8-13-99

TRANSPORTATION DEPARTMENT

Research and Special Programs Administration

Pipeline safety:

Enforcement procedures; comments due by 10-12-99; published 8-12-99

TREASURY DEPARTMENT

Internal Revenue Service

Income taxes:

Trusts with foreign grantors; definition of term ≥grantor≥; cross reference and public hearing; comments due by 10-12-99; published 8-10-99

Procedure and administration:

Private foundation disclosure requirements; comments due by 10-12-99; published 8-10-99

LIST OF PUBLIC LAWS

This is a continuing list of public bills from the current session of Congress which have become Federal laws. It may be used in conjunction with ''P L U S'' (Public Laws Update Service) on 202–523–6641. This list is also available online at http://www.nara.gov/fedreg.

The text of laws is not published in the **Federal Register** but may be ordered in ''slip law'' (individual pamphlet) form from the Superintendent of Documents, U.S. Government Printing Office, Washington, DC 20402 (phone, 202–512–1808). The text will also be made available on the Internet from GPO Access at http://www.access.gpo.gov/nara/index.html. Some laws may not yet be available.

S. 380/P.L. 106–63

To reauthorize the Congressional Award Act. (Oct. 1, 1999; 113 Stat. 510)

Last List October 4, 1999

Public Laws Electronic Notification Service (PENS)

PENS is a free electronic mail notification service of newly enacted public laws. To subscribe, go to www.gsa.gov/archives/publaws-l.html or send E-mail to **listserv@www.gsa.gov** with the following text message:

SUBSCRIBE PUBLAWS-L Your Name.

Note: This service is strictly for E-mail notification of new laws. The text of laws is not available through this service. **PENS** cannot respond to specific inquiries sent to this address.