10–14–99
Vol. 64 No. 198
Pages 55615–55808

federal register

Thursday
October 14, 1999

The **FEDERAL REGISTER** is published daily, Monday through Friday, except official holidays, by the Office of the Federal Register, National Archives and Records Administration, Washington, DC 20408, under the Federal Register Act (44 U.S.C. Ch. 15) and the regulations of the Administrative Committee of the Federal Register (1 CFR Ch. I). The Superintendent of Documents, U.S. Government Printing Office, Washington, DC 20402 is the exclusive distributor of the official edition.

The **Federal Register** provides a uniform system for making available to the public regulations and legal notices issued by Federal agencies. These include Presidential proclamations and Executive Orders, Federal agency documents having general applicability and legal effect, documents required to be published by act of Congress, and other Federal agency documents of public interest.

Documents are on file for public inspection in the Office of the Federal Register the day before they are published, unless the issuing agency requests earlier filing. For a list of documents currently on file for public inspection, see http://www.nara.gov/fedreg.

The seal of the National Archives and Records Administration authenticates the Federal Register as the official serial publication established under the Federal Register Act. Under 44 U.S.C. 1507, the contents of the **Federal Register** shall be judicially noticed.

The **Federal Register** is published in paper and on 24x microfiche. It is also available online at no charge as one of the databases on GPO Access, a service of the U.S. Government Printing Office.

The online edition of the **Federal Register** is issued under the authority of the Administrative Committee of the Federal Register as the official legal equivalent of the paper and microfiche editions (44 U.S.C. 4101 and 1 CFR 5.10). It is updated by 6 a.m. each day the **Federal Register** is published and it includes both text and graphics from Volume 59, Number 1 (January 2, 1994) forward.

GPO Access users can choose to retrieve online **Federal Register** documents as TEXT (ASCII text, graphics omitted), PDF (Adobe Portable Document Format, including full text and all graphics), or SUMMARY (abbreviated text) files. Users should carefully check retrieved material to ensure that documents were properly downloaded.

On the World Wide Web, connect to the **Federal Register** at http://www.access.gpo.gov/nara. Those without World Wide Web access can also connect with a local WAIS client, by Telnet to swais.access.gpo.gov, or by dialing (202) 512-1661 with a computer and modem. When using Telnet or modem, type swais, then log in as guest with no password.

For more information about GPO Access, contact the GPO Access User Support Team by E-mail at gpoaccess@gpo.gov; by fax at (202) 512–1262; or call (202) 512–1530 or 1–888–293–6498 (toll free) between 7 a.m. and 5 p.m. Eastern time, Monday–Friday, except Federal holidays.

The annual subscription price for the **Federal Register** paper edition is $555, or $607 for a combined **Federal Register,** Federal Register Index and List of CFR Sections Affected (LSA) subscription; the microfiche edition of the **Federal Register** including the Federal Register Index and LSA is $220. Six month subscriptions are available for one-half the annual rate. The charge for individual copies in paper form is $8.00 for each issue, or $8.00 for each group of pages as actually bound; or $1.50 for each issue in microfiche form. All prices include regular domestic postage and handling. International customers please add 25% for foreign handling. Remit check or money order, made payable to the Superintendent of Documents, or charge to your GPO Deposit Account, VISA, MasterCard or Discover. Mail to: New Orders, Superintendent of Documents, P.O. Box 371954, Pittsburgh, PA 15250–7954.

There are no restrictions on the republication of material appearing in the **Federal Register.**

How To Cite This Publication: Use the volume number and the page number. Example: 64 FR 12345.

SUBSCRIPTIONS AND COPIES

PUBLIC	
Subscriptions:	
Paper or fiche	**202–512–1800**
Assistance with public subscriptions	**512–1806**
General online information	**202–512–1530; 1–888–293–6498**
Single copies/back copies:	
Paper or fiche	**512–1800**
Assistance with public single copies	**512–1803**
FEDERAL AGENCIES	
Subscriptions:	
Paper or fiche	**523–5243**
Assistance with Federal agency subscriptions	**523–5243**

Printed on recycled paper.

Contents

Federal Register

Vol. 64, No. 198

Thursday, October 14, 1999

Agricultural Marketing Service
NOTICES
Agency information collection activities:
Proposed collection; comment request, 55691

Agriculture Department
See Agricultural Marketing Service
See Commodity Credit Corporation
See Food and Nutrition Service
See Food Safety and Inspection Service
See Rural Utilities Service

Alcohol, Tobacco and Firearms Bureau
RULES
Antiterrorism and Effective Death Penalty Act of 1996; implementation:
Plastic explosives; detection agents requirement, 55625–55629

Army Department
NOTICES
Patent licenses; non-exclusive, exclusive, or partially exclusive:
Capewell Components Co., L.L.C., 55702

Arts and Humanities, National Foundation
See National Foundation on the Arts and the Humanities

Centers for Disease Control and Prevention
NOTICES
Agency information collection activities:
Submission for OMB review; comment request, 55732
Meetings:
Public Health Service Activities and Research at DOE Sites Citizens Advisory Committee, 55732–55733

Children and Families Administration
NOTICES
Agency information collection activities:
Proposed collection; comment request, 55733–55735

Commerce Department
See International Trade Administration
See National Oceanic and Atmospheric Administration
NOTICES
Agency information collection activities:
Submission for OMB review; comment request, 55695–55696

Commodity Credit Corporation
NOTICES
Food purchases for humanitarian food assistance programs; Total Quality Systems Audit program implementation, 55691–55692

Defense Department
See Army Department
RULES
Acquisition regulations:
Brand name or equal purchase descriptions, 55632–55633
Congressional Medal of Honor, 55632

Education Department
NOTICES
Grants and cooperative agreements; availability, etc.:
National Clearinghouse of Rehabilitation Training Materials Program, 55702–55703

Employment and Training Administration
NOTICES
Adjustment assistance:
Chahta Enterprise, 55753
McWilliam Forge, 55753
Pabst Engineering, 55753
Thomson Financial Co. Investext Group, 55753
Adjustment assistance and NAFTA transitional adjustment assistance:
Blount, Inc., et al., 55749–55753
Environmental statements; availability, etc.:
Exeter, RI; new Job Corp Center, 55754–55755
Harford, CT; new Job Corps Center, 55755–55757
NAFTA transitional adjustment assistance:
Blount Co. et al., 55757–55760

Energy Department
See Federal Energy Regulatory Commission
NOTICES
Committees; establishment, renewal, termination, etc.:
DOE/NSF Nuclear Science Advisory Committee, 55703–55704
Grants and cooperative agreements; availability, etc.:
Energy Efficiency and Renewable Energy Office; research, development, and demonstration activities, 55704
Meetings:
Environmental Management Site-Specific Advisory Board—
Paducah Gaseous Diffusion Plant, KY; correction, 55704
National Coal Council Advisory Committee, 55704

Environmental Protection Agency
RULES
Hazardous waste program authorizations:
Georgia, 55629–55632
PROPOSED RULES
Air quality implementation plans; approval and promulgation; various States:
New Jersey, 55662–55667
New York, 55667–55671
Hazardous waste program authorizations:
Georgia, 55671
NOTICES
Agency information collection activities:
Submission for OMB review; comment request, 55709–55710
Meetings:
Clean Air Act Advisory Committee, 55710–55711
Drinking water issues—
Contaminant identification and selection process and 6-year review of all existing national primary drinking water regulations; stakeholders, 55711–55712
Pesticide, food, and feed additive petitions:
Interregional Research Project No. 4 et al., 55714–55721

Pesticide programs:
Organophosphates; risk assessments and public participation in risk management—
Fenthion, 55712–55714
Superfund program:
Prospective purchaser agreements—
French Gulch/Wellington-Oro Site, CO, 55721

Equal Employment Opportunity Commission
NOTICES
Agency information collection activities:
Proposed collection; comment request, 55721–55722

Executive Office of the President
See Management and Budget Office
See Presidential Documents
See Science and Technology Policy Office

Farm Credit Administration
RULES
Farm credit system:
Miscellaneous amendments
Effective date; partial withdrawal, 55621

Federal Aviation Administration
RULES
Airworthiness directives:
Eurocopter France, 55621–55625
PROPOSED RULES
Airworthiness directives:
Airbus, 55642–55644
Bombardier, 55640–55642
British Aerospace, 55636–55638
McDonnell Douglas, 55644–55648
Raytheon, 55638–55640
NOTICES
Meetings:
Harmonization Work Program, 55806–55807
RTCA, Inc., 55807

Federal Communications Commission
PROPOSED RULES
Regulatory Flexibility Act; review of regulations, 55671–55688
NOTICES
Meetings; Sunshine Act, 55725

Federal Election Commission
NOTICES
Meetings; Sunshine Act, 55725

Federal Energy Regulatory Commission
NOTICES
Hydroelectric applications, 55707–55709
Applications, hearings, determinations, etc.:
Amoco Energy Trading Corp. et al., 55705
Carnegie Interstate Pipeline Co., 55705
Distrigas of Massachusetts Corp., 55705–55706
ONEOK Field Service Co., 55706
Williams Gas Pipelines-Central, Inc., 55706

Federal Maritime Commission
NOTICES
Agreements filed, etc., 55725–55726
Freight forwarder licenses:
DSM Freight, Inc., et al., 55726
Investigations, hearings, petitions, etc.:
Stallion Cargo, Inc., 55726

Federal Reserve System
NOTICES
Banks and bank holding companies:
Change in bank control, 55726
Formations, acquisitions, and mergers, 55726–55727
Meetings; Sunshine Act, 55727

Federal Trade Commission
NOTICES
Prohibited trade practices:
Ceridian Corp., 55728–55730
Conopco, Inc., 55730–55731
Applications, hearings, determinations, etc.:
Shell Oil Co. et al., 55727–55728

Fish and Wildlife Service
NOTICES
Endangered and threatened species permit applications, 55743
Marine mammals permit applications, 55744

Food and Drug Administration
NOTICES
Reports and guidance documents; availability, etc.:
Intraocular lens; industry guidance, 55735–55736
Medical devices—
Processed human dura mater; premarket notification application preparation; guidance, 55736–55737

Food and Nutrition Service
NOTICES
Agency information collection activities:
Proposed collection; comment request, 55692–55694

Food Safety and Inspection Service
NOTICES
Meat and poultry inspection:
Retail store operations; inspection requirements exemption; notice of U.S. Court of Appeals decision, 55694–55695

Geological Survey
NOTICES
Document access policy; information availability, 55744–55745
Meetings:
Digital Earth Interagency Working Group, 55745

Health and Human Services Department
See Centers for Disease Control and Prevention
See Children and Families Administration
See Food and Drug Administration
See Health Care Financing Administration
See Indian Health Service
See Inspector General Office, Health and Human Services Department
NOTICES
Organization, functions, and authority delegations:
Program Support Center, 55731–55732

Health Care Financing Administration
See Inspector General Office, Health and Human Services Department
NOTICES
Agency information collection activities:
Proposed collection; comment request, 55737–55738
Meetings:
Competitive Pricing Advisory Committee, 55738
Medicare Coverage Advisory Committee, 55738–55739

Indian Health Service
NOTICES
Agency information collection activities:
Submission for OMB review; comment request, 55739–55740

Inspector General Office, Health and Human Services Department
NOTICES
Program exclusions; list, 55740–55743

Interior Department
See Fish and Wildlife Service
See Geological Survey
See Land Management Bureau
See National Park Service
See Reclamation Bureau

International Trade Administration
NOTICES
Antidumping:
Antifriction bearings (other than tapered roller bearings) and parts from—
Japan, 55696–55697
Canned pineapple fruit from—
Thailand, 55697
Compact ductile iron waterworks fittings and glands from—
China, 55697–55700
Polyester staple fiber from—
Korea and Taiwan, 55700
Countervailing duties:
Industrial phosphoric acid from—
Israel, 55700–55701

Justice Department
NOTICES
Pollution control; consent judgments:
Akzo Nobel A.B., 55747
Georgie Boy Manufacturing, Inc., 55747–55748
H. Brown Co. et al., 55748
Interstate General Co. et al., 55748
Richard Mottolo, K.J. Quinn & Co., Inc., et al., 55748–55749
State of Wisconsin Inc., 55749

Labor Department
See Employment and Training Administration
See Pension and Welfare Benefits Administration

Land Management Bureau
NOTICES
Closure of public lands:
Montana, 55745
Realty actions; sales, leases, etc.:
California, 55745–55746

Libraries and Information Science, National Commission
See National Commission on Libraries and Information Science

Management and Budget Office
NOTICES
Paperwork Reduction Act:
Estimating paperwork burden; guidance to agencies; reevaluation, 55788–55790

National Commission on Libraries and Information Science
NOTICES
Meetings; Sunshine Act, 55760

National Credit Union Administration
NOTICES
Credit unions:
Bylaws, 55760–55773

National Foundation on the Arts and the Humanities
NOTICES
Meetings; Sunshine Act, 55773

National Oceanic and Atmospheric Administration
RULES
Fishery conservation and management:
Alaska; fisheries of Exclusive Economic Zone—
North Pacific groundfish, 55634–55635
Atlantic highly migratory species—
Vessel monitoring system, 55633
PROPOSED RULES
Fishery conservation and management:
Northeastern United States fisheries—
Scup, 55688–55689
West Coast States and Western Pacific fisheries—
Pacific Fishery Management Council; meetings, 55689–55690
NOTICES
Coastal zone management programs and estuarine sanctuaries:
State programs—
Intent to evaluate performance, 55701
Meetings:
Gulf of Mexico Fishery Management Council, 55701–55702

National Park Service
NOTICES
Reports and guidance documents; availability, etc.:
Relationships between NPS and cooperating associations; Reference Manual No. 32 use with Director's Order No. 32; update, 55746

National Science Foundation
NOTICES
Meetings:
Bioengineering and Environmental Systems Special Emphasis Panel, 55774
Biological Infrastructure Advisory Panel, 55774
Chemical and Transport Systems Special Emphasis Panel, 55774–55775
Education and Human Resources Advisory Panel, 55775
Engineering Advisory Committee, 55775
Engineering Education and Centers Special Emphasis Panel, 55775
Infrastructure, Methods, and Science Studies Advisory Panel, 55775–55776
Materials Research Special Emphasis Panel, 55776
Social, Behavioral, and Economic Sciences Advisory Committee, 55776

National Transportation Safety Board
NOTICES
Meetings:
North American Free Trade Agreement; highway transportation safety aspects; hearing, 55776

Nuclear Regulatory Commission
NOTICES
Environmental statements; availability, etc.:
Baltimore Gas & Electric Co., 55786
Meetings:
Reactor Safeguards Advisory Committee, 55786–55788
Meetings; Sunshine Act, 55788
Applications, hearings, determinations, etc.:
Cabot Performance Materials, 55776–55777
Carolina Power & Light Co., 55777
Consolidated Edison Co. of New York, Inc., 55777–55785
Consumers Power, 55785
International Uranium (USA) Corp., 55785
Molycorp, Inc., 55785
Portland General Electric Co. et al., 55785–55786
Washington Public Power Supply System, 55786

Office of Management and Budget
See Management and Budget Office

Pension and Welfare Benefits Administration
NOTICES
Meetings:
Employee Welfare and Pension Benefit Plans Advisory Council, 55760

Presidential Documents
PROCLAMATIONS
Special observances:
Children's Day, National (Proc. 7238), 55617–55618
Columbus Day (Proc. 7239), 55619–55620
School Lunch Week, National (Proc. 7237), 55615–55616

Public Health Service
See Centers for Disease Control and Prevention
See Food and Drug Administration
See Indian Health Service

Reclamation Bureau
NOTICES
Environmental statements; availability, etc.:
Republican River basin, NE and KS; long-term water supply contracts renewal, 55746–55747

Rural Utilities Service
NOTICES
Environmental statements; availability, etc.:
East Kentucky Power Cooperative, Inc., 55695

Science and Technology Policy Office
NOTICES
Research misconduct; Federal policy to protect integrity of research record; comment request, 55722–55725

Securities and Exchange Commission
PROPOSED RULES
Securities:
Audit committee disclosure, 55648–55662
NOTICES
Self-regulatory organizations; proposed rule changes:
National Association of Securities Dealers, Inc., 55793–55796
Applications, hearings, determinations, etc.:
Stephens Group, Inc., et al., 55790–55793

Small Business Administration
NOTICES
Disaster loan areas:
Florida, 55796–55797

Social Security Administration
NOTICES
Agency information collection activities:
Proposed collection; comment request, 55797
Grants and cooperative agreements; availability, etc.:
Disability Research Institute; establishment, 55797–55805

State Department
NOTICES
Meetings:
International Communications and Information Policy Advisory Committee, 55805
Shipping Coordinating Committee, 55805
Munitions export licenses; suspension, revocation, etc.:
Indonesia, 55805–55806

Surface Transportation Board
NOTICES
Railroad operation, acquisition, construction, etc.:
CSX Transportation, Inc., 55807–55808
Tongue River Railroad Co.; correction, 55808

Transportation Department
See Federal Aviation Administration
See Surface Transportation Board

Treasury Department
See Alcohol, Tobacco and Firearms Bureau

Reader Aids
Consult the Reader Aids section at the end of this issue for phone numbers, online resources, finding aids, reminders, and notice of recently enacted public laws.

CFR PARTS AFFECTED IN THIS ISSUE

A cumulative list of the parts affected this month can be found in the Reader Aids section at the end of this issue.

3 CFR

PROCLAMATIONS:

7237 55615
7238 55617
7239 55619

12 CFR

612 55621
614 55621
618 55621

14 CFR

39 (2 documents) 55621, 55624

Proposed Rules:

39 (5 documents) 55636, 55638, 55640, 55642, 55644

17 CFR

Proposed Rules:

210 55648
228 55648
229 55648
240 55648

27 CFR

47 55625
55 55625

40 CFR

271 55629

Proposed Rules:

52 (2 documents) 55662, 55667
271 55671

47 CFR

Proposed Rules:

Ch. I 55671

48 CFR

209 55632
211 55632
214 55632
252 55632

50 CFR

635 55633
679 55634

Proposed Rules:

648 55688
660 55689

Federal Register
Vol. 64, No. 198
Thursday, October 14, 1999

Presidential Documents

Title 3—

The President

Proclamation 7237 of October 8, 1999

National School Lunch Week, 1999

By the President of the United States of America

A Proclamation

For more than 50 years, the National School Lunch Program has been at the forefront of our Nation's effort to promote the health and well-being of our children. Created to ensure that all children in our Nation receive the nourishment they need to develop into healthy and productive adults, the program provides nutritious lunches to more than 26 million children each day in 95,000 schools and residential child care institutions across the country. For many children, this free or reduced-price meal is often the most nutritious meal of their day.

Equally important, the National School Lunch Program provides our children with the fuel they need to remain alert and attentive in the classroom. Common sense tells us—and scientific research confirms—that a hungry child cannot focus on learning and that a child who does not eat properly is more likely to be sick and absent from school. Day in and day out, school lunches give our children the energy to learn today, while helping them prepare for the challenges of the future.

An array of nutrition programs now supplements the National School Lunch Program. Whether providing schoolchildren with a good breakfast or a healthy afternoon snack, the School Breakfast Program, the Summer School Food Service Program, the Special Milk Program, and the Child and Adult Care Food Program help ensure that our children eat nutritious and healthy meals throughout the day. As we observe this special week, let us reaffirm the belief of President Harry Truman, founder of the school lunch program, that ''Nothing is more important in our national life than the welfare of our children, and proper nourishment comes first in attaining this welfare.''

In recognition of the contributions of the National School Lunch Program to the health, education, and well-being of our Nation's children, the Congress, by joint resolution of October 9, 1962 (Public Law 87–780), has designated the week beginning on the second Sunday in October of each year as ''National School Lunch Week'' and has requested the President to issue a proclamation in observance of this week.

NOW, THEREFORE, I, WILLIAM J. CLINTON, President of the United States of America, do hereby proclaim October 10 through October 16, 1999, as National School Lunch Week. I call upon all Americans to recognize all those individuals whose efforts contribute so much to the success of our national child nutrition programs, whether at the Federal, State, or local level.

IN WITNESS WHEREOF, I have hereunto set my hand this eighth day of October, in the year of our Lord nineteen hundred and ninety-nine, and of the Independence of the United States of America the two hundred and twenty-fourth.

William J. Clinton

[FR Doc. 99–26998
Filed 10–13–99; 8:45 am]
Billing code 3195–01–P

Presidential Documents

Proclamation 7238 of October 8, 1999

National Children's Day, 1999

By the President of the United States of America

A Proclamation

The children of America are our most precious gift and our greatest responsibility. Their well-being is one of the greatest measures of our success as a society, and our ability to provide them with a loving, safe, and supportive environment will help determine the character of our Nation.

We can be proud of the progress we have made in creating such environments. To strengthen families and homes, we have provided tax relief to working families, raised the minimum wage, and enacted the Family and Medical Leave Act so that parents can take time off to be with a sick child or new baby without putting their jobs at risk. To give more children a healthy start in life, we have extended health care coverage to millions of previously uninsured children. To help America's youth reach their full potential, my Administration has urged the Congress to pass legislation to provide our students with a first-rate education by ensuring that they are educated by well-prepared teachers, in smaller classes, in modern and safe buildings, and with the latest in information technology.

On National Children's Day, however, we must also reflect soberly on how far we still have to go to make our communities safe and nurturing places for our children. One of our greatest challenges is to provide health coverage for the almost 11 million American children who are still uninsured. Many of these children are eligible for Medicaid or qualify for coverage under the Children's Health Insurance Programs that are now operating in every State across our Nation. Educators, policymakers, health care professionals, and business, community, and media leaders have a vital role to play in raising parents' awareness of their children's eligibility for this important coverage and making sure that these children are enrolled.

America must also confront the recent senseless acts of violence that have taken the lives and the innocence of so many young people. Places where they once felt safe—schools and churches and day care facilities—have been shaken by violence. Addressing this assault on our society's values and our children's future is a top priority of my Administration. We must work together—parents, students, educators, public officials, and religious, community, and industry leaders—to instill in our youth a sense of compassion, tolerance, and self-respect, so that they may find their way in a troubled world. We must also help them develop the strength to express their own anger and alienation with words, not weapons.

One of the most powerful tools we have in this endeavor is youth mentoring. A recent Department of Justice study showed that mentoring programs help young people resist violence and substance abuse, perform better academically, and interact more positively with their families and with other youth. Recognizing the value of mentoring programs, particularly to the well-being of millions of at-risk youth, my Administration announced earlier this year several public and private initiatives to encourage mentoring, and we set aside $14 million in grants for the Justice Department's Juvenile Mentoring Program.

Children bring so much hope, joy, and love to our lives; in return, we owe them our time, our attention, the power of our example, and the comfort of our concern. It is a fair trade, and one that enriches the lives of us all.

NOW, THEREFORE, I, WILLIAM J. CLINTON, President of the United States of America, by virtue of the authority vested in me by the Constitution and laws of the United States, do herebyproclaim October 10, 1999, as National Children's Day. I urge all Americans to express their love and appreciation for the children of our Nation on this day and on every day throughout the year. I invite Federal officials, local governments, communities, and all American families to join in observing this day with appropriate ceremonies and activities. I also urge all Americans to reflect upon the importance of children to our families, the importance of strong families to our children, and the importance of both to America.

IN WITNESS WHEREOF, I have hereunto set my hand this eighth day of October, in the year of our Lord nineteen hundred and ninety-nine, and of the Independence of the United States of America the two hundred and twenty-fourth.

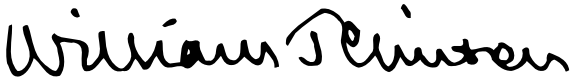

[FR Doc. 99–26999
Filed 10–13–99; 8:45 am]
Billing code 3195–01–P

Presidential Documents

Proclamation 7239 of October 8, 1999

Columbus Day, 1999

By the President of the United States of America

A Proclamation

Although Christopher Columbus' first voyage to the New World took place more than 500 years ago, the momentous changes it brought about still resonate today. His journey triggered a historic encounter between Europe and the native peoples of the New World; helped open new continents to exploration, trade, and development; established a reliable route to the Americas; and was a major milestone in the inexorable trend toward expansion and globalization.

Columbus could not have imagined the full impact of his arrival in 1492 or how his journey would shape human history. The zeal for trade that motivated the Spanish crown to fund Columbus' voyages still exists today as we work to strengthen our commercial ties with other nations and to compete in an increasingly global economy. Columbus' own passion for adventure survives as an integral part of our national character and heritage, reflected in our explorations of the oceans' depths and the outer reaches of our solar system. A son of Italy, Columbus opened the door to the New World for millions of people from across the globe who have followed their dreams to America. Today, Americans of Italian and Spanish descent can take special pride, not only in Columbus' historic achievements, but also in their own immeasurable contributions to our national life. From business to the arts, from government to academia, they have played an important part in advancing the peace and prosperity our country enjoys today.

We are about to embark on our own journey into a new millennium of unknown challenges and possibilities. As we ponder that future, Columbus' courage and daring still capture the American imagination, inspiring us to look to the horizon, as he did, and see, not a daunting boundary, but a new world full of opportunity.

In tribute to Columbus' many achievements, the Congress, by joint resolution of April 30, 1934 (48 Stat. 657), and an Act of June 28, 1968 (82 Stat. 250), has requested the President to proclaim the second Monday in October of each year as ''Columbus Day.''

NOW, THEREFORE, I, WILLIAM J. CLINTON, President of the United States of America, do hereby proclaim October 11, 1999, as Columbus Day. I call upon the people of the United States to observe this day with appropriate ceremonies and activities. I also direct that the flag of the United States be displayed on all public buildings on the appointed day in honor of Christopher Columbus.

IN WITNESS WHEREOF, I have hereunto set my hand this eighth day of October, in the year of our Lord nineteen hundred and ninety-nine, and of the Independence of the United States of America the two hundred and twenty-fourth.

William J. Clinton

[FR Doc. 99–27000
Filed 10–13–99; 8:45 am]
Billing code 3195–01–P

Rules and Regulations

Federal Register
Vol. 64, No. 198
Thursday, October 14, 1999

This section of the FEDERAL REGISTER contains regulatory documents having general applicability and legal effect, most of which are keyed to and codified in the Code of Federal Regulations, which is published under 50 titles pursuant to 44 U.S.C. 1510.

The Code of Federal Regulations is sold by the Superintendent of Documents. Prices of new books are listed in the first FEDERAL REGISTER issue of each week.

FARM CREDIT ADMINISTRATION

12 CFR Parts 612, 614 and 618

RIN 3052–AB85

Standards of Conduct; Loan Policies and Operations; General Provisions; Regulatory Burden; Effective Date

AGENCY: Farm Credit Administration.

ACTION: Confirmation of effective date; partial withdrawal.

SUMMARY: The Farm Credit Administration (FCA) published a direct final rule, with opportunity for comment, amending parts 612, 614 and 618 on August 9, 1999 (64 FR 43046). This direct final rule would reduce regulatory burden on the Farm Credit System (FCS or System) by repealing or amending 16 regulations. These revisions provide System banks and associations with greater flexibility concerning loan sales, agricultural secondary market activities, loans to insiders, letters of credit, information programs, travel expenses, and disclosing borrower information during litigation. The opportunity for comment expired on September 8, 1999. We received a significant adverse comment on the direct final rule regarding insider loans. As a result, the revision to subpart M of part 614 will not become effective. All other regulations in the direct final rule will become effective in accordance with this document. Pursuant to 12 U.S.C. 2252, the effective date of the final rule is 30 days from the date of publication in the **Federal Register** during which either or both Houses of Congress are in session. Based on the records of the sessions of Congress, the effective date of the regulations is October 13, 1999.

EFFECTIVE DATE: The regulation amending 12 CFR parts 612, 614 and 618 published on August 9, 1999 (64 FR 43046) is effective October 13, 1999, except that the revision to subpart M of part 614 (amendatory instruction #9 on page 43049) is withdrawn as of October 13, 1999.

FOR FURTHER INFORMATION CONTACT:

Eric Howard, Senior Policy Analyst, or Dale Aultman, Policy Analyst, Office of Policy and Analysis, Farm Credit Administration, McLean, VA 22102–5090, (703) 883–4498, TDD (703) 883–4444,

or

Richard A. Katz, Senior Attorney, Office of General Counsel, Farm Credit Administration, McLean, VA 22102–5090, (703) 883–4020, TDD (703) 883–4444.

SUPPLEMENTARY INFORMATION: Our direct final rule reduces unnecessary regulatory burden on FCS institutions by repealing or revising 16 regulations that System commenters identified as burdensome. Direct final rulemaking enables Federal agencies to quickly adopt noncontroversial regulations without the usual notice and comment period. On August 9, 1999, we notified you that this rule would become effective 30 days after publication in the **Federal Register** during which either or both Houses of Congress are in session unless we received a significant adverse comment by September 8, 1999. A significant adverse comment is one where a commenter explains why the rule would be inappropriate (including challenges to its underlying premise of approach), ineffective, or unacceptable. Our August 9, 1999 notice informed you that if we received a significant adverse comment about any amendment, paragraph, or section of this rule, we would withdraw it, but adopt all other provisions as a final rule. We received a significant adverse comment on the revision to § 614.4460 concerning insider loans. As a result, the revision to subpart M of part 614 will not become effective, and we will notify you how we plan to proceed. Existing §§ 614.4450, 614.4460 and 614.4470 remain in full force and effect. All other regulations in the direct final rule take effect on October 13, 1999.

(12 U.S.C. 2252(a)(9) and (10))

Dated: October 7, 1999.

Vivian L. Portis,

Secretary, Farm Credit Administration Board.

[FR Doc. 99–26749 Filed 10–13–99; 8:45 am]

BILLING CODE 6705–01–P

DEPARTMENT OF TRANSPORTATION

Federal Aviation Administration

14 CFR Part 39

[Docket No. 98–SW–75–AD; Amendment 39–11369; AD 99–21–24]

RIN 2120–AA64

Airworthiness Directives; Eurocopter France Model SA–365C, C1, C2, N, and N1; AS–365N2; and SA–366G1 Helicopters

AGENCY: Federal Aviation Administration, DOT.

ACTION: Final rule.

SUMMARY: This amendment adopts a new airworthiness directive (AD), applicable to Eurocopter France Model SA–365C, C1, C2, N, and N1; AS–365N2; and SA–366G1 helicopters, that requires inspecting the tightening torque of the main rotor hub blade attach beam spherical thrust bearing bolts (bolts). This AD also requires either applying the specified torque or, if necessary, conducting a dye penetrant inspection for cracks in the metal components. Replacing the spherical thrust bearing (bearing) with an airworthy bearing is also required if a crack is found. This amendment is prompted by reports of cracks in the metal components of the bearing attachment joint. The actions specified by this AD are intended to prevent loosening of bearing bolts in flight, which may cause cracks in the metal components, failure of the bearing, and subsequent loss of control of the helicopter.

EFFECTIVE DATE: November 18, 1999.

FOR FURTHER INFORMATION CONTACT:

Shep Blackman, Aerospace Engineer, FAA, Rotorcraft Directorate, Regulations Group, 2601 Meacham Blvd., Fort Worth, Texas 76137, telephone (817) 222–5296, fax (817) 222–5961.

SUPPLEMENTARY INFORMATION: A proposal to amend part 39 of the Federal Aviation Regulations (14 CFR part 39) to include an airworthiness directive (AD) that is applicable to Eurocopter France Model SA–365C, C1, C2, N, and N1; AS–365N2; and SA–366G1 helicopters was published in the **Federal Register** on July 9, 1999 (64 FR 37046). That action proposed to require inspecting the tightening torque of the bolts and either applying a specified torque or, if

necessary, conducting a dye penetrant inspection for cracks in the metal components. Replacing the bearing with an airworthy bearing was also proposed if a crack was found.

Interested persons have been afforded an opportunity to participate in the making of this amendment. No comments were received on the proposal or the FAA's determination of the cost to the public. The FAA has determined that air safety and the public interest require the adoption of the rule as proposed.

The FAA estimates that 100 helicopters of U.S. registry will be affected by this AD, that it will take approximately 0.5 work hour and approximately 3,000 inspections over the life of the fleet per helicopter to accomplish the required actions, and that the average labor rate is $60 per work hour. Required parts will cost approximately $3,000 per helicopter. Based on these figures, the total cost impact of the AD on U.S. operators is estimated to be $9,030,000 assuming 10 ship sets of bearings would need to be replaced on the fleet.

The regulations adopted herein will not have substantial direct effects on the States, on the relationship between the national government and the States, or on the distribution of power and responsibilities among the various levels of government. Therefore, in accordance with Executive Order 12612, it is determined that this final rule does not have sufficient federalism implications to warrant the preparation of a Federalism Assessment.

For the reasons discussed above, I certify that this action (1) is not a ''significant regulatory action'' under Executive Order 12866; (2) is not a ''significant rule'' under DOT Regulatory Policies and Procedures (44 FR 11034, February 26, 1979); and (3) will not have a significant economic impact, positive or negative, on a substantial number of small entities under the criteria of the Regulatory Flexibility Act. A final evaluation has been prepared for this action and it is contained in the Rules Docket. A copy of it may be obtained from the Rules Docket at the FAA, Office of the Regional Counsel, Southwest Region, 2601 Meacham Blvd., Room 663, Fort Worth, Texas 76137.

List of Subjects in 14 CFR Part 39

Air transportation, Aircraft, Aviation safety, Safety.

Adoption of the Amendment

Accordingly, pursuant to the authority delegated to me by the Administrator, the Federal Aviation Administration amends part 39 of the Federal Aviation Regulations (14 CFR part 39) as follows:

PART 39—AIRWORTHINESS DIRECTIVES

1. The authority citation for part 39 continues to read as follows:

Authority: 49 U.S.C. 106(g), 40113, 44701.

§ 39.13 [Amended]

2. Section 39.13 is amended by adding a new airworthiness directive to read as follows:

AD 99–21–24 Eurocopter France: Amendment 39–11369. Docket No. 98–SW–75–AD.

Applicability: Model SA–365C, C1, C2, N, and N1; AS–365N2; and SA–366G1 helicopters, certificated in any category.

Note 1: This AD applies to each helicopter identified in the preceding applicability provision, regardless of whether it has been otherwise modified, altered, or repaired in the area subject to the requirements of this AD. For helicopters that have been modified, altered, or repaired so that the performance of the requirements of this AD is affected, the owner/operator must request approval for an alternative method of compliance in accordance with paragraph (b) of this AD. The request should include an assessment of the effect of the modification, alteration, or repair on the unsafe condition addressed by this AD; and, if the unsafe condition has not been eliminated, the request should include specific proposed actions to address it.

Compliance: Required within 550 hours time-in-service (TIS), unless accomplished previously, and thereafter at intervals not to exceed 550 hours TIS.

To prevent loosening of the main rotor hub blade attach beam spherical thrust bearing bolts (bolts), cracks in the metal components, failure of a spherical thrust bearing (bearing), and subsequent loss of control of the helicopter, accomplish the following:

(a) Inspect the tightening torque of the bolts as indicated by ''A'' in Figure 1.

(1) If tightening torque is equal to or less than 12 m.daN (88.4 lb-ft), remove the bearing and conduct a dye penetrant inspection for cracks on the two contact surfaces identified as ''H'' in Figure 1.

(i) If a crack is detected, replace the bearing with an airworthy bearing.

(ii) If no crack is detected, reinstall the bearing.

Note 2: Eurocopter France Service Bulletins 05.22, 05.24, and 05.00.39, all dated July 17, 1998, pertain to the subject of this AD.

(2) If the tightening torque is greater than 12 m.daN (88.4 lb-ft), then tighten to 19–22 m.daN (140–162.2 lb-ft).

BILLING CODE 4910–13–P

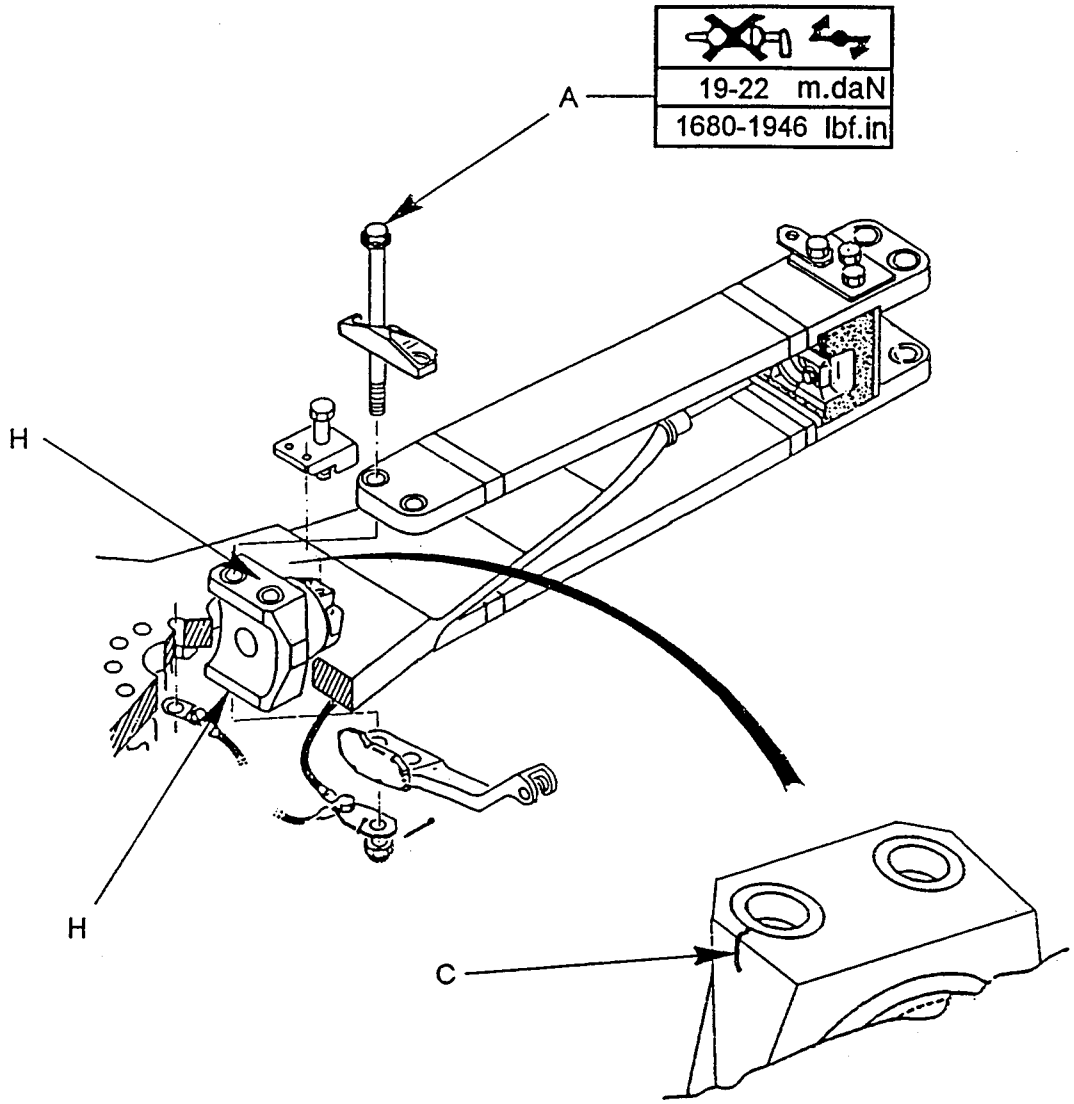

Figure 1

BILLING CODE 4910–13–C

(b) An alternative method of compliance or adjustment of the compliance time that provides an acceptable level of safety may be used if approved by the Manager, Rotorcraft Standards Staff, Rotorcraft Directorate, FAA. Operators shall submit their requests through an FAA Principal Maintenance Inspector, who may concur or comment and then send it to the Manager, Rotorcraft Standards Staff.

Note 3: Information concerning the existence of approved alternative methods of compliance with this AD, if any, may be obtained from the Rotorcraft Standards Staff.

(c) Special flight permits may be issued in accordance with sections 21.197 and 21.199 of the Federal Aviation Regulations (14 CFR 21.197 and 21.199) to operate the helicopter to a location where the requirements of this AD can be accomplished.

(d) This amendment becomes effective on November 18, 1999.

Note 4: The subject of this AD is addressed in Direction Generale De L'Aviation Civile (France) AD's 98–383–044(A) for the Model SA–365C, 98–382–024–(A) for the Model SA–366, and 98–384–047(A) for the Model AS–365N helicopters. These AD's are all dated September 23, 1998.

Issued in Fort Worth, Texas, on October 5, 1999.

Mark R. Schilling,

Acting Manager, Rotorcraft Directorate, Aircraft Certification Service.

[FR Doc. 99–26712 Filed 10–13–99; 8:45 am]

BILLING CODE 4910–13–P

DEPARTMENT OF TRANSPORTATION

Federal Aviation Administration

14 CFR Part 39

[Docket No. 99–SW–29–AD; Amendment 39–11370; AD 99–21–25]

RIN 2120–AA64

Airworthiness Directives; Eurocopter France Model SE.3160, SA.315B, SA.316B, SA.316C, and SA.319B Helicopters

AGENCY: Federal Aviation Administration, DOT.

ACTION: Final rule; request for comments.

SUMMARY: This amendment adopts a new airworthiness directive (AD) applicable to Eurocopter France Model SE.3160, SA.315B, SA.316B, SA.316C, and SA.319B helicopters with a main gearbox (MGB), all part numbers, not modified in accordance with MOD 072241. This action requires, prior to further flight and thereafter prior to the first flight of each day, inspecting the MGB magnetic plug for metal particles. This AD also requires inspecting the MGB oil filter for metal particles. This amendment is prompted by the failure of a bevel wheel gear attachment bolt (bolt) during testing of an SA.315B MGB. The actions specified in this AD are intended to detect a condition that could cause bolt failure and damage to the MGB, resulting in loss of drive to the main rotor and subsequent loss of control of the helicopter.

DATES: Effective October 29, 1999.

Comments for inclusion in the Rules Docket must be received on or before December 13, 1999.

ADDRESSES: Submit comments in triplicate to the Federal Aviation Administration (FAA), Office of the Regional Counsel, Southwest Region, Attention: Rules Docket No. 99–SW–29–AD, 2601 Meacham Blvd., Room 663, Fort Worth, Texas 76137.

FOR FURTHER INFORMATION CONTACT: Shep Blackman, Aerospace Engineer, FAA, Rotorcraft Directorate, Rotorcraft Standards Staff, 2601 Meacham Blvd., Fort Worth, Texas 76137, telephone (817) 222–5296, fax (817) 222–5961.

SUPPLEMENTARY INFORMATION: The Direction Generale De L'Aviation Civile (DGAC), the airworthiness authority for France, notified the FAA that an unsafe condition may exist on Model SE.3160, SA.315B, SA.316B, SA.316C, and SA.319B helicopters with a MGB, all part numbers, not modified in accordance with MOD 072241. The DGAC advises that bolt failure, which occurred when testing an SA.315B MGB, could lead to damage of the MGB and loss of rotor drive.

These helicopter models are manufactured in France and are type certificated for operation in the United States under the provisions of section 21.29 of the Federal Aviation Regulations (14 CFR 21.29) and the applicable bilateral airworthiness agreement. Pursuant to this bilateral airworthiness agreement, the DGAC has kept the FAA informed of the situation described above. The FAA has examined the findings of the DGAC, reviewed all available information, and determined that AD action is necessary for products of these type designs that are certificated for operation in the United States.

An unsafe condition has been identified that is likely to exist or develop on other Model SE.3160, SA.315B, SA.316B, SA.316C, and SA.319B helicopters with a MGB, all part numbers, not modified in accordance with MOD 072241 of the same type design registered in the United States. Therefore, this AD is being issued to detect a condition that could cause bolt failure and damage to the MGB. This AD requires inspecting the MGB magnetic plug for metal particles prior to further flight and prior to the first flight of each day. This AD also requires inspecting the MGB oil filter for metal particles at intervals not to exceed 25 hours time-in-service. The actions are required to be accomplished in accordance with the applicable maintenance manuals. The short compliance time involved is required because the previously described critical unsafe condition can adversely affect the controllability of the helicopter. Therefore, inspecting the MGB magnetic plug for metal particles is required prior to further flight and this AD must be issued immediately.

Since a situation exists that requires the immediate adoption of this regulation, it is found that notice and opportunity for prior public comment hereon are impracticable, and that good cause exists for making this amendment effective in less than 30 days.

The FAA estimates that 93 helicopters will be affected by this AD, that it will take approximately 0.25 work hour to inspect the magnetic plug prior to the first flight of each day and 2 work hours to inspect the oil filter every 25 hours TIS, and that the average labor rate is $60 per work hour. Based on these figures, the total cost impact of the AD on U.S. operators is estimated to be $318,060 annually, assuming any metal particles found are not enough to require a cleaning or an overhaul of the MGB and that each helicopter is flown 100 days per year for 4 hours each day.

Comments Invited

Although this action is in the form of a final rule that involves requirements affecting flight safety and, thus, was not preceded by notice and an opportunity for public comment, comments are invited on this rule. Interested persons are invited to comment on this rule by submitting such written data, views, or arguments as they may desire. Communications should identify the Rules Docket number and be submitted in triplicate to the address specified under the caption **ADDRESSES**. All communications received on or before the closing date for comments will be considered, and this rule may be amended in light of the comments received. Factual information that supports the commenter's ideas and suggestions is extremely helpful in evaluating the effectiveness of the AD action and determining whether additional rulemaking action would be needed.

Comments are specifically invited on the overall regulatory, economic, environmental, and energy aspects of the rule that might suggest a need to modify the rule. All comments submitted will be available, both before

and after the closing date for comments, in the Rules Docket for examination by interested persons. A report that summarizes each FAA-public contact concerned with the substance of this AD will be filed in the Rules Docket.

Commenters wishing the FAA to acknowledge receipt of their comments submitted in response to this rule must submit a self-addressed, stamped postcard on which the following statement is made: ''Comments to Docket No. 99–SW–29–AD.'' The postcard will be date stamped and returned to the commenter.

The regulations adopted herein will not have substantial direct effects on the States, on the relationship between the national government and the States, or on the distribution of power and responsibilities among the various levels of government. Therefore, in accordance with Executive Order 12612, it is determined that this final rule does not have sufficient federalism implications to warrant the preparation of a Federalism Assessment.

The FAA has determined that this regulation is an emergency regulation that must be issued immediately to correct an unsafe condition in aircraft, and that it is not a ''significant regulatory action'' under Executive Order 12866. It has been determined further that this action involves an emergency regulation under DOT Regulatory Policies and Procedures (44 FR 11034, February 26, 1979). If it is determined that this emergency regulation otherwise would be significant under DOT Regulatory Policies and Procedures, a final regulatory evaluation will be prepared and placed in the Rules Docket. A copy of it, if filed, may be obtained from the Rules Docket at the location provided under the caption **ADDRESSES**.

List of Subjects in 14 CFR Part 39

Air transportation, Aircraft, Aviation safety, Safety.

Adoption of the Amendment

Accordingly, pursuant to the authority delegated to me by the Administrator, the Federal Aviation Administration amends part 39 of the Federal Aviation Regulations (14 CFR part 39) as follows:

PART 39—AIRWORTHINESS DIRECTIVES

1. The authority citation for part 39 continues to read as follows:

Authority: 49 U.S.C. 106(g), 40113, 44701.

§ 39.13 [Amended]

2. Section 39.13 is amended by adding a new airworthiness directive to read as follows:

AD 99–21–25 Eurocopter France: Amendment 39–11370. Docket No. 99–SW–29–AD.

Applicability: Model SE.3160, SA.315B, SA.316B, SA.316C, and SA.319B helicopters with a main gearbox, all part numbers, not modified in accordance with MOD 072241, installed, certificated in any category.

Note 1: This AD applies to each helicopter identified in the preceding applicability provision, regardless of whether it has been otherwise modified, altered, or repaired in the area subject to the requirements of this AD. For helicopters that have been modified, altered, or repaired so that the performance of the requirements of this AD is affected, the owner/operator must request approval for an alternative method of compliance in accordance with paragraph (d) of this AD. The request should include an assessment of the effect of the modification, alteration, or repair on the unsafe condition addressed by this AD; and, if the unsafe condition has not been eliminated, the request should include specific proposed actions to address it.

Compliance: Required as indicated, unless accomplished previously.

To detect a condition that could cause failure of a bevel wheel gear attachment bolt (bolt) and damage to the main gearbox (MGB), resulting in loss of drive to the main rotor and subsequent loss of control of the helicopter, accomplish the following:

(a) Prior to further flight and thereafter prior to the first flight of each day, inspect the MGB magnetic plug for metal particles. If metal particles are found, comply with the instructions in the applicable maintenance manual.

(b) At intervals not to exceed 25 hours time-in-service, inspect the MGB oil filter for metal particles. If metal particles are found, comply with the instructions in the applicable maintenance manual.

Note 2: Work Card 5.41.202 pertains to the subject of this AD.

(c) Modification of the MGB by MOD 072241 is terminating action for the requirements of this AD.

(d) An alternative method of compliance or adjustment of the compliance time that provides an acceptable level of safety may be used if approved by the Manager, Regulations Group, Rotorcraft Directorate. Operators shall submit their requests through an FAA Principal Maintenance Inspector, who may concur or comment and then send it to the Manager, Regulations Group, Rotorcraft Directorate.

Note 3: Information concerning the existence of approved alternative methods of compliance with this AD, if any, may be obtained from the Regulations Group, Rotorcraft Directorate.

(e) Special flight permits are prohibited.

(f) This amendment becomes effective on October 29, 1999.

Note 4: The subject of this AD is addressed in Direction Generale De L'Aviation Civile (France) AD 98–304–058(A) for Model SE.3160, SA.316B, SA.316C, and SA.319B helicopters, and AD 98–303–041(A) for Model SA.315B helicopters, both dated July 29, 1998.

Issued in Fort Worth, Texas, on October 5, 1999.

Mark R. Schilling,

Acting Manager, Rotorcraft Directorate, Aircraft Certification Service.

[FR Doc. 99–26711 Filed 10–13–99; 8:45 am]

BILLING CODE 4910–13–P

DEPARTMENT OF THE TREASURY

Bureau of Alcohol, Tobacco and Firearms

27 CFR Parts 47 and 55

[T.D. ATF–419; Ref: T.D. ATF–387 and Notice No. 847]

RIN: 1512–AB63

Implementation of Public Law 104–132, the Antiterrorism and Effective Death Penalty Act of 1996, Relating to the Marking of Plastic Explosives for the Purpose of Detection (96R–029P)

AGENCY: Bureau of Alcohol, Tobacco and Firearms (ATF), Department of the Treasury.

ACTION: Final rule, Treasury decision.

SUMMARY: This final rule implements certain provisions of the Antiterrorism and Effective Death Penalty Act of 1996 (Pub. L. 104–132). These regulations implement the law by requiring detection agents for plastic explosives. The final rule also authorizes the use of four specific detection agents to mark plastic explosives and provides for the designation of other detection agents.

DATES: This rule is effective December 13, 1999.

FOR FURTHER INFORMATION CONTACT: James P. Ficaretta, Regulations Division, Bureau of Alcohol, Tobacco and Firearms, 650 Massachusetts Avenue, NW., Washington, DC 20226 (202–927–8230).

SUPPLEMENTARY INFORMATION:

Background

Public Law 104–132, 110 Stat. 1214, the Antiterrorism and Effective Death Penalty Act of 1996 (hereafter, ''the Act'') was enacted on April 24, 1996. Title VI of the Act, ''Implementation of Plastic Explosives Convention,'' added new requirements to the Federal explosives laws in 18 U.S.C. Chapter 40. Section 607 of the Act states that, except as otherwise provided, the amendments made by Title VI shall take effect 1 year after the date of enactment, i.e., on April

24, 1997. The stated purpose of Title VI is to fully implement the Convention on the Marking of Plastic Explosives for the Purpose of Detection, Done at Montreal on March 1, 1991 (hereafter, ''the Convention'').

The Convention represents an important achievement in international cooperation in response to the threat posed to the safety and security of international civil aviation by virtually undetectable plastic explosives in the hands of terrorists. Such explosives were used in the tragic destruction of Pan Am flight 103 over Lockerbie, Scotland, in December 1988, and UTA flight 772 in September 1989. In the aftermath of these bombings, the international community moved to draft a multilateral treaty to ensure that plastic explosives would thereafter contain a chemical marking agent to render them detectable.

Temporary Rule

On February 25, 1997, ATF published in the **Federal Register** a temporary rule implementing certain provisions of the Act (T.D. ATF–387, 62 FR 8374). The new statutory provisions and the regulation changes necessitated by the law are as follows:

(1) *Definitions.* Section 602 of the Act added three definitions to section 841 of title 18, U.S.C. The term ''Convention on the Marking of Plastic Explosives'' is defined in the law to mean the Convention on the Marking of Plastic Explosives for the Purpose of Detection, Done at Montreal on March 1, 1991.

The term ''detection agent'' is defined as any one of the following substances when introduced into a plastic explosive or formulated in such explosive as a part of the manufacturing process in such a manner as to achieve homogeneous distribution in the finished explosive:

(1) Ethylene glycol dinitrate (EGDN), $C_2H_4(NO_3)_2$, molecular weight 152, when the minimum concentration in the finished explosive is 0.2 percent by mass;

(2) 2,3-Dimethyl-2,3-dinitrobutane (DMNB), $C_6H_{12}(NO_2)_2$, molecular weight 176, when the minimum concentration in the finished explosive is 0.1 percent by mass;

(3) Para-Mononitrotoluene (p-MNT), $C_7H_7NO_2$, molecular weight 137, when the minimum concentration in the finished explosive is 0.5 percent by mass;

(4) Ortho-Mononitrotoluene (o-MNT), $C_7H_7NO_2$, molecular weight 137, when the minimum concentration in the finished explosive is 0.5 percent by mass; and

(5) any other substance added by the Secretary of the Treasury by regulation, after consultation with the Secretary of State and the Secretary of Defense. Permitting the Secretary to designate detection agents other than the four listed in the statute would facilitate the use of other substances without the need for legislation. However, as specified in the law, only those substances which have been added to the table in part 2 of the Technical Annex to the Convention on the Marking of Plastic Explosives may be designated as approved detection agents. ATF would have no authority to issue a regulation adding to the list of approved detection agents until the Technical Annex has been so modified.

The last term added to section 841 of title 18, U.S.C., ''plastic explosive,'' is defined as an explosive material in flexible or elastic sheet form formulated with one or more high explosives which in their pure form has a vapor pressure less than 10^{-4} Pa at a temperature of 25 °C, is formulated with a binder material, and is as a mixture malleable or flexible at normal room temperature. Pursuant to part I of the Technical Annex to the Convention, high explosives include, but are not restricted to, cyclotetramethylenetetranitramine (HMX), pentaerythritol tetranitrate (PETN), and cyclotrimethylenetrinitramine (RDX).

The above changes to regulations are prescribed in § 55.180.

(2) *Requirement of Detection Agents for Plastic Explosives.* The Act amended the Federal explosives laws in 18 U.S.C. Chapter 40 by adding new subsections (l)–(o) to section 842. Section 842(l) makes it unlawful for any person to manufacture any plastic explosive that does not contain a detection agent.

Section 842(m) makes it unlawful for any person to import or bring into the U.S. or export from the U.S. any plastic explosive that does not contain a detection agent. The provisions of this section do not apply to the importation or bringing into the U.S. or the exportation from the U.S. of any plastic explosive that was imported or brought into or manufactured in the U.S. prior to the date of enactment of the Act by or on behalf of any agency of the U.S. performing military or police functions (including any military reserve component) or by or on behalf of the National Guard of any State, not later than 15 years after the Convention enters into force with respect to the U.S. Pursuant to Article XIII of the Convention, the Convention will enter into force on the sixtieth day following the date of deposit of the thirty-fifth instrument of ratification, acceptance, approval or accession with the Depositary, *i.e.,* the International Civil Aviation Organization, provided that no fewer than five such States (nations) have declared that they are producer States. (A ''producer State'' means any State in whose territory explosives are manufactured.) Should thirty-five such instruments be deposited prior to the deposit of their instruments by five producer States, the Convention will enter into force on the sixtieth day following the date of deposit of the instrument of ratification, acceptance, approval or accession of the fifth producer State. For other States, the Convention will enter into force sixty days following the date of deposit of their instruments of ratification, acceptance, approval or accession.

Section 842(n) provides that it is unlawful for any person to ship, transport, transfer, receive, or possess any plastic explosive that does not contain a detection agent. Exceptions to the prohibitions are provided for any plastic explosive that was imported or brought into, or manufactured in the U.S. prior to the date of enactment of the Act by any person during the period beginning on that date, *i.e.,* April 24, 1996, and ending 3 years after that date, i.e., April 24, 1999. Exceptions to the prohibitions are also provided for any plastic explosive that was imported or brought into, or manufactured in the U.S. prior to the date of enactment of the Act by or on behalf of any agency of the U.S. performing a military or police function (including any military reserve component) or by or on behalf of the National Guard of any State, not later than 15 years after the date of entry into force of the Convention on the marking of Plastic Explosives with respect to the U.S.

The above changes to the regulations are prescribed in § 55.180.

Section 842(o) provides that any person, other than an agency of the U.S. (including any military reserve component) or the National Guard of any State, possessing any plastic explosive on the date of enactment, shall report to the Secretary within 120 days after the date of enactment the quantity of such explosives possessed, the manufacturer or importer, any marks of identification on such explosives, and such other information as the Secretary may prescribe by regulation. Regulations implementing this provision of the Act were prescribed in T.D. ATF–382, published in the **Federal Register** on July 23, 1996 (61 FR 38084). However, T.D. ATF–387 made a technical amendment to § 55.181 to include the control number assigned by

the Office of Management and Budget (OMB).

(3) *Criminal Sanctions.* The Act amended section 844(a) of title 18, U.S.C., by providing that any person who violates any of the provisions of section 842(l)–(o) shall be fined under title 18, imprisoned for not more than 10 years, or both. Changes to the regulations in § 55.185 have been made to implement this provision of the law.

(4) *Exceptions.* The Act amended 18 U.S.C. 845(a) to provide that the exemptions from the requirements of 18 U.S.C. Chapter 40 that apply to governmental entities and other specified uses of explosives do not apply to section 842(l)–(o). Changes to the regulations in § 55.141(a) have been made to implement this provision of the law.

The Act also made a technical amendment to 18 U.S.C. 845(a)(1) to clarify the current exemption from the requirements of 18 U.S.C. Chapter 40 for aspects of the transportation of explosives regulated by the U.S. Department of Transportation. The amendment makes it clear that the exemption applies only to those aspects of the transportation related to safety. Changes to the regulations in § 55.141(a)(1) have been made to implement this change in the law.

The Act also amended section 845 of title 18, U.S.C., by adding a new subsection (c). This amendment provides that it is an affirmative defense against any proceeding involving section 842(l)–(o) of title 18, U.S.C., if the proponent proves by a preponderance of the evidence that the plastic explosive—

(1) Consisted of a small amount of plastic explosive intended for and utilized solely in lawful—

(a) Research, development, or testing of new or modified explosive materials;

(b) Training in explosives detection or development or testing of explosives detection equipment; or

(c) Forensic science purposes; or

(2) Was plastic explosive that, within 3 years after the date of enactment of the Act, will be or is incorporated in a military device within the territory of the U.S. and remains an integral part of such military device, or is intended to be, or is incorporated in, and remains an integral part of a military device that is intended to become, or has become, the property of any agency of the U.S. performing military or police functions (including any military reserve component) or the National Guard of any State, wherever such device is located.

As defined in the Act, the term ''military device'' includes, but is not restricted to, shells, bombs, projectiles, mines, missiles, rockets, shaped charges, grenades, perforators, and similar devices lawfully manufactured exclusively for military or police purposes.

The affirmative defenses provided in the law could be asserted in a criminal case, a judicial forfeiture case, or an administrative license or permit denial or revocation.

Changes to the regulations in § 55.182 have been made to implement the provisions of section 845(c) of title 18, U.S.C.

(5) *Seizure and Forfeiture of Plastic Explosives.* The Act amended section 596(c)(1) of the Tariff Act of 1930, 19 U.S.C. 1595a(c)(1), to provide for the seizure or forfeiture of plastic explosive that does not contain a detection agent that is introduced or attempted to be introduced into the U.S. Changes to the regulations in § 55.186 have been made to implement this provision of the law.

Miscellaneous. In order to fully implement the provisions of the Act, regulations are prescribed in § 55.184 which authorize the Director to request from licensed manufacturers and licensed importers accurate and complete statements of process with regard to any plastic explosive or any detection agent that is to be introduced into a plastic explosive or formulated in such explosive. The regulations also give ATF the authority to require samples of any plastic explosive or detection agent from such licensees.

As stated in Article III of the Convention, ''[e]ach State Party shall take the necessary and effective measures to prohibit and prevent the movement into or out of its territory of unmarked [plastic] explosives'' so as to prevent their diversion or use for purposes inconsistent with the Convention. In order to comply with the objectives of the Convention, regulations are prescribed in § 55.183 which require persons filing Form 6 applications for importation of plastic explosives on or after April 24, 1997, to attach to the application a statement certifying that the plastic explosive to be imported contains a detection agent or is a ''small amount'' to be used for research, training, or testing purposes and is exempt from the detection agent requirement.

Finally, the temporary rule made certain technical amendments and conforming changes to the regulations in Part 55. For example, §§ 55.49, 55.52, and 55.55 were amended to remove the reference to § 55.182. Section 55.182, *Classes of explosive materials,* was replaced by § 55.202 pursuant to T.D. ATF–87 (August 7, 1981; 46 FR 40382).

Notice of Proposed Rulemaking—Analysis of Comments

On February 25, 1997, ATF also published a notice of proposed rulemaking cross-referenced to the temporary regulations (Notice No. 847, 62 FR 8412). The comment period for Notice No. 847 closed on May 27, 1997.

ATF received four comments in response to Notice No. 847. One commenter expressed support for the temporary regulations. The remaining commenters raised several concerns with respect to the temporary regulations. Three commenters contend that current owners of unmarked plastic explosives should be ''grandfathered'' and allowed to retain their existing stocks and use them up at their normal attrition rate, beyond the 3-year period specified in the Act. To accomplish this, however, legislative action would be necessary.

One commenter argues that State and local law enforcement agencies should be exempt from the marking requirement. Such an exemption, however, would also necessitate a statutory change.

Two commenters argue that the Government should purchase all unmarked plastic explosives from current owners. ATF has no authority to use appropriated funds to purchase unmarked plastic explosives. These commenters also suggest that the Federal Government supply the detection agent to all possessors of unmarked plastic explosives so that they may come into compliance. As stated above, ATF has no authority to use appropriated funds for this purpose.

The same commenters contend that a definition of the term ''small quantity'' is needed for purposes of the Act. As noted, the law provides that it is an affirmative defense against any proceeding involving section 842(l)–(o) of Title 18, U.S.C., if the proponent proves by a preponderance of the evidence that the plastic explosive consisted of a small quantity intended for and utilized solely in lawful—

(a) Research, development, or testing of new or modified explosive materials;

(b) Training in explosives detection or development or testing of explosives detection equipment; or

(c) Forensic science purposes.

One of the commenters states that he possesses ''a small quantity (less than 170 pounds) of plastic explosives'' for research purposes. However, he points out the following:

> By manufactures [sic] standards, small quantity is referred to as 500 lbs. or less, however, to detection personnel the term ''small quantity'' may mean 10 lbs. or less.

A company providing explosive training may term ''small quantity'' as between 500–2000 lbs. of plastic explosives.

The other commenter states that he possesses approximately 3,000 pounds of PBX for training purposes.

The above comments illustrate the difficulty in specifying a particular amount of explosive that is appropriate for all possessors. As indicated, the amount of explosives required for a particular type of research may be far greater than the amount required for another type of research. Accordingly, ATF believes that such determinations should be made on a case-by-case basis after consideration of all relevant facts. ATF emphasizes that the statute makes it clear that the burden is on the possessor to prove that the quantity of unmarked plastic explosives is a ''small amount'' possessed for one of the exempt purposes.

Finally, one commenter suggests that an exemption be given to individuals using unmarked plastic explosives for training purposes. The commenter trains law enforcement, military, and civilian personnel in explosives safety. As indicated above, one of the affirmative defenses to any proceeding involving the plastic explosive provisions of the law is for a small quantity of plastic explosive utilized solely in training in explosive detection or development. There is no exception for training in explosives safety. Such an exception would require legislative action.

Miscellaneous—Final Rule

The Convention on the Marking of Plastic Explosives for the Purpose of Detection, Done at Montreal on March 1, 1991, entered into force on June 21, 1998. Thirty-eight countries have ratified, including 11 producing states. As noted, for the Convention to enter into force internationally, 35 countries were required to ratify, 11 of which are producing states. Section 55.180 of the final regulations is being amended to incorporate the actual date that the Convention entered into force.

Accordingly, the temporary regulations published in the **Federal Register** on February 25, 1997 (T.D. ATF–387) are adopted as final upon the effective date of this Treasury decision.

Executive Order 12866

It has been determined that this final rule is not a significant regulatory action as defined in E.O. 12866, because the economic effects flow directly from the underlying statute and not from this final rule. Therefore, this final rule is not subject to the analysis required by this Executive order.

Regulatory Flexibility Act

The provisions of the Regulatory Flexibility Act relating to an initial and final regulatory flexibility analysis (5 U.S.C. 604) are not applicable to this final rule because the agency was not required to publish a notice of proposed rulemaking under 5 U.S.C. 553 or any other law. Accordingly, a regulatory flexibility analysis is not required.

Paperwork Reduction Act

The collection of information contained in this final regulation has been reviewed and approved by the Office of Management and Budget in accordance with the requirements of the Paperwork Reduction Act (44 U.S.C. 3507(d)) under control number 1512–0539. An agency may not conduct or sponsor, and a person is not required to respond to, a collection of information unless it displays a valid control number assigned by the Office of Management and Budget.

The collection of information in this regulation is in 27 CFR 55.184(a). This information is required to ensure compliance with the provisions of Public Law 104–132. This information will be used to ensure that plastic explosives contain a detection agent as required by law. The collection of information is mandatory. The likely respondents are individuals and businesses. The estimated average annual burden associated with the collection of information in this regulation is 12 hours per respondent. Comments concerning the accuracy of this burden estimate and suggestions for reducing this burden should be directed to the Chief, Document Services Branch, Room 3110, Bureau of Alcohol, Tobacco and Firearms, 650 Massachusetts Avenue, NW., Washington, DC 20226, and to the Office of Management and Budget, Attention: Desk Officer for the Department of the Treasury, Bureau of Alcohol, Tobacco and Firearms, Office of Information and Regulatory Affairs, Washington, DC 20503.

Disclosure

Copies of the temporary rule, the notice of proposed rulemaking, all written comments, and this final rule will be available for public inspection during normal business hours at: ATF Public Reading Room, Room 6480, 650 Massachusetts Avenue, NW., Washington, DC.

Drafting Information: The author of this document is James P. Ficaretta, Regulations Division, Bureau of Alcohol, Tobacco and Firearms.

List of Subjects

27 CFR Part 47

Administrative practice and procedure, Arms control, Arms and munitions, Authority delegation, Chemicals, Customs duties and inspection, Imports, Penalties, Reporting and recordkeeping requirements, Scientific equipment, and Seizures and forfeitures.

27 CFR Part 55

Administrative practice and procedure, Authority delegations, Customs duties and inspection, Explosives, Hazardous materials, Imports, Penalties, Reporting and recordkeeping requirements, Safety, Security measures, Seizures and forfeitures, Transportation, and Warehouses.

Authority and Issuance

Accordingly, parts 47 and 55 are amended as follows:

Paragraph 1. The temporary rule published on February 25, 1997 (62 FR 8374) is adopted as final with the following changes.

PART 55—COMMERCE IN EXPLOSIVES

Par. 2. The authority citation for 27 CFR part 55 continues to read as follows:

Authority: 18 U.S.C. 847.

Par. 3. Section 55.180 is amended by revising paragraphs (b), (c)(2), and (d)(2) to read as follows:

§ 55.180 Prohibitions relating to unmarked plastic explosives.

* * * * *

(b) No person shall import or bring into the United States, or export from the United States, any plastic explosive that does not contain a detection agent. This paragraph does not apply to the importation or bringing into the United States, or the exportation from the United States, of any plastic explosive that was imported or brought into, or manufactured in the United States prior to April 24, 1996, by or on behalf of any agency of the United States performing military or police functions (including any military reserve component) or by or on behalf of the National Guard of any State, not later than 15 years after the date of entry into force of the Convention on the Marking of Plastic Explosives with respect to the United States, *i.e.*, not later than June 21, 2013.

(c) * * *

(2) The shipment, transportation, transfer, receipt, or possession of any plastic explosive that was imported or

brought into, or manufactured in the United States prior to April 24, 1996, by or on behalf of any agency of the United States performing a military or police function (including any military reserve component) or by or on behalf of the National Guard of any State, not later than 15 years after the date of entry into force of the Convention on the Marking of Plastic Explosives with respect to the United States, *i.e.*, not later than June 21, 2013.

(d) * * *

(2) ''Date of entry into force'' of the Convention on the Marking of Plastic Explosives means that date on which the Convention enters into force with respect to the U.S. in accordance with the provisions of Article XIII of the Convention on the Marking of Plastic Explosives. The Convention entered into force on June 21, 1998.

* * * * *

Signed: February 10, 1999.

John W. Magaw,

Director.

Approved: March 10, 1999.

John P. Simpson,

Deputy Assistant Secretary (Regulatory, Tariff and Trade Enforcement).

[FR Doc. 99–26771 Filed 10–13–99; 8:45 am]

BILLING CODE 4810–31–P

ENVIRONMENTAL PROTECTION AGENCY

40 CFR Part 271

[FRL–6453–2]

Georgia: Final Authorization of State Hazardous Waste Management Program Revision

AGENCY: Environmental Protection Agency (EPA).

ACTION: Immediate final rule.

SUMMARY: Georgia has applied for Final authorization of revisions to its hazardous waste program under the Resource Conservation and Recovery Act (RCRA). Georgia's revision consists of provisions promulgated between July 1, 1996 and June 30, 1997. The EPA has reviewed Georgia's application and determined that its hazardous waste program revision satisfies all of the requirements necessary to qualify for Final authorization. EPA is authorizing the state program revision through this immediate final action. EPA is publishing this rule without prior proposal because the Agency views this as a noncontroversial action and does not anticipate adverse comments. However, in the proposed rules section of this **Federal Register**, EPA is publishing a separate document that will serve as a proposal to authorize the revision should the Agency receive adverse comment. Unless EPA receives adverse written comments during the review and comment period, the decision to authorize Georgia's hazardous waste program revision will take effect as provided below.

DATES: This Final authorization for Georgia will become effective without further notice on December 13, 1999, unless EPA receives adverse comment by November 15, 1999. Should EPA receive such comments the Agency will publish a timely withdrawal informing the public that the rule will not take effect.

ADDRESSES: Send written comments to Narindar Kumar, Chief, RCRA Programs Branch, Waste Management Division, U.S. Environmental Protection Agency, Atlanta Federal Center, 61 Forsyth Street, SW., Atlanta, GA, 30303–3104; (404) 562–8440. Copies of the Georgia program revision application and the materials which EPA used in evaluating the revision are available for inspection and copying during normal business hours at the following addresses: Georgia Department of Natural Resources, Environmental Protection Division, Floyd Towers East, Room 1154, 205 Butler Street, SE., Atlanta, Georgia 30334; and U.S. EPA Region 4, Library, Atlanta Federal Center, 61 Forsyth Street, SW., Atlanta, Georgia 30303; (404) 562–8190.

FOR FURTHER INFORMATION CONTACT: Narindar Kumar, Chief, RCRA Programs Branch, Waste Management Division, U.S. Environmental Protection Agency, Atlanta Federal Center, 61 Forsyth Street, SW., Atlanta, GA, 30303–3104; (404) 562–8440.

SUPPLEMENTARY INFORMATION:

A. Background

States with final authorization under Section 3006(b) of the RCRA, 42 U.S.C. 6926(b), have a continuing obligation to maintain a hazardous waste program that is equivalent to, consistent with, and no less stringent than the Federal hazardous waste program. As the Federal hazardous waste program changes, the States must revise their programs and apply for authorization of the revisions. Revisions to State hazardous waste programs may be necessary when Federal or State statutory or regulatory authority is modified or when certain other changes occur. Most commonly, States must revise their programs because of changes to EPA's regulations in 40 Code of Federal Regulations (CFR) parts 124, 260 through 266, 268, 270, 273 and 279.

B. Georgia

Georgia initially received final authorization on August 7, 1984, effective August 21, 1984, (49 FR 31417) to implement its base hazardous waste management program. Georgia most recently received authorization for revisions to its program on September 18, 1998, effective November 17, 1998, (63 FR 49852). On October 27, 1998, Georgia submitted a final complete program revision application, seeking authorization of its program revision in accordance with 40 CFR 271.21. The EPA reviewed Georgia's application and now makes an immediate final decision, subject to receipt of adverse written comment, that Georgia's hazardous waste program revision satisfies all of the requirements necessary to qualify for Final Authorization. Consequently, EPA intends to grant Georgia Final Authorization for the program modifications contained in the revision.

Today, Georgia is seeking authority to administer the following Federal requirements promulgated between July 1, 1996 through June 30, 1997:

Federal Requirement	Federal Register date and page	Analogous State authority [1]
Conditionally Exempt Small Quantity Generator Disposal Options under Subtitle D; Checklist 153.	7/1/96, 61 FR 34278	GHWMA, O.C.G.A. §§ 12–8–62(10) and (12), 12–8–64(1)(A)(B), (D), (E), (I) and (K), 12–8–65(a)(16) and (21); Rule 391–3–11–.07(1).
Consolidated Organic Air Emission Standards for Tanks, Surface Impoundments, and Containers; Checklist 154.	12/6/94, 59 FR 62926; 5/19/95, 60 FR 26828; 9/29/95, 60 FR 50428; 11/13/95, 60 FR 56953; 2/9/96, 61 FR 4911; 6/5/96, 61 FR 28509; 11/25/96, 61 FR 59950.	GHWMA, O.C.G.A. §§ 12–8–64(1)(A), (B), (C), (D), (E), and (F), 12–8–65(a)(3), (16) and (21), 12–8–66; Rules 391–3–11–.02(1), 391–3–11–.07(1), 391–3–11–.08(1), 391–3–11–.10(1) and (2), and 391–3–11–.11(3)(h) and (5)(f); Georgia Quality Air Act, O.C.G.A. § 12–9–1 *et seq.*, at O.C.G.A. § 12–9–5–(b)(1) and (3); Rules for Air Quality Control, Chapter 391–3–1, at Rule 391–3–1–.01(nnnn) effective June 15, 1998.

Federal requirement	Federal Register date and page	Analogous State authority [1]
Land Disposal restrictions Phase III—Emergency Extension of the KO88 Capacity Variance; Checklist 155.	1/14/97, 62 FR 1997	GHWMA, O.C.G.A. §§ 12–8–62(14), 12–8–64(1)(A), (B), (D), (F), and (I), 12–8–65(a)(16) and (21); Rule 391–3–11–.16.
Military Munitions Rule: Hazardous Waste Identification and Management; Explosives Emergencies; Manifest Exemption for Transport of Hazardous waste on Right-of-Ways on Contiguous Properties; Checklist 156.	2/12/97, 62 FR 6650	GHWMA, O.C.G.A. §§ 12–8–62(10), (16), (20), 12–8–64(1)(A), (B), (C), (D), (E), (F), (G), and (I), 12–8–65(a)(16) and (21), 12–8–66, 12–8–67, 12–8–75; Rules 391–3–11–.02(1), 391–3–11–.07(1), 391–3–11–.08(1), 391–3–11–.09, 391–3–11–.10(1), 391–3–11–.10(2), 391–3–11–.10(3), 391–3–11–.11(1)(a), 391–3–11–.11(7)(d).
Land Disposal Restrictions Phase IV—Treatment Standards for Wood Preserving Wastes, Paperwork Reduction and Streamlining; Checklist 157.	5/12/97, 62 FR 26018	GHWMA, O.C.G.A. §§ 12–8–62(10), (13), (14), (20), (23), 12–8–64(1)(A), (B), (D), (E), (F), (I), (J), (K), (L), 12–8–65(a)(16) and (21), (25); Rules 391–3–11–.07(1), 391–3–11–.16.
Testing and Monitoring Activities Amendment III; Checklist 158.	6/13/97, 62 FR 32462	GHWMA, O.C.G.A. §§ 12–8–62(9), (10), and (13), 12–8–64(1)(A), (D), and (F), 12–8–65(a)(16) and (21); Rules 391–3–11–.02(1), 391–3–11–.10(1), (2), (3).
Conformance with the Carbamate Vacatur; Checklist 159.	6/17/97, 62 FR 32977	GHWMA, O.C.G.A. §§ 12–8–62(9), (10), (14), (20) and (23), 12–8–64(1)(A), (B), (D), (F) and (I), 12–8–65(a)(16) and (21); Rule 391–3–11.07(1) and 391–3–11–.16.

[1] The Georgia provisions are from the Georgia Hazardous Waste Management Regulations effective September 26, 1985 and recently revised December 24, 1997.

EPA shall administer any RCRA hazardous waste permits, or portions of permits that contain conditions based upon the Federal program provisions for which the State is applying for authorization and which were issued by EPA prior to the effective date of this authorization. EPA will suspend issuance of any further permits under the provisions for which the State is being authorized on the effective date of this authorization.

Georgia is not authorized to operate the federal program on Indian lands. This authority remains with EPA unless provided otherwise in a future statute or regulation.

EPA is publishing this rule without prior proposal because we view this as a noncontroversial program revision and do not anticipate adverse comment. However in the ''Proposed Rules'' section of today's **Federal Register**, we are publishing a separate document that will serve as the proposal to authorize the revision if we receive adverse comments. This authorization will become effective without further notice on December 13, 1999, unless EPA receives adverse comment by November 15, 1999. Should EPA receive such comments it will publish a timely withdrawal informing the public that the rule will not take effect. We will address all public comments in a subsequent final action based on the proposed rule. EPA may not provide additional opportunity for comment. Any parties interested in commenting must do so at this time.

The public may submit written comments on EPA's immediate final decision until November 15, 1999. Copies of Georgia's application for program revision are available for inspection and copying at the locations indicated in the **ADDRESSES** section of this document. The **ADDRESSES** section also indicates where to send written comments on this action.

C. Decision

I conclude that Georgia's application for program revision authorization meets all of the statutory and regulatory requirements established by RCRA. Accordingly, EPA grants Georgia Final Authorization to operate its hazardous waste program as revised. Georgia now has responsibility for permitting treatment, storage, and disposal facilities within its borders (except in Indian country) and for carrying out the aspects of the RCRA program described in its revised program application, subject to the limitations of HSWA. Georgia also has primary enforcement responsibilities, although EPA retains the right to conduct inspections under section 3007 of RCRA, and to take enforcement actions under sections 3008, 3013 and 7003 of RCRA.

D. Codification in Part 272

The EPA uses 40 CFR part 272 for codification of the decision to authorize Georgia's program and for incorporation by reference of those provisions of its statutes and regulations that EPA will enforce under sections 3008, 3013 and 7003 of RCRA. EPA reserves amendment of 40 CFR part 272, subpart II until a later date.

Unfunded Mandates Reform Act

Title II of the Unfunded Mandates Reform Act of 1995 (UMRA), Public Law 104–4, establishes requirements for Federal agencies to assess the effects of their regulatory actions on State, local, and tribal governments and the private sector. Under section 202 of the UMRA, EPA generally must prepare a written statement, including a cost-benefit analysis, for proposed and final rules with ''Federal mandates'' that may result in expenditures to State, local, and tribal governments, in the aggregate, or to the private sector, of $100 million or more in any one year. Before promulgating an EPA rule for which a written statement is needed, section 205 of the UMRA generally requires EPA to identify and consider a reasonable number of regulatory alternatives and adopt the least costly, most cost-effective or least burdensome alternative that achieves the objectives of the rule. The provisions of section 205 do not apply when they are inconsistent with applicable law. Moreover, section 205 allows EPA to adopt an alternative other than the least costly, most cost-effective or least burdensome alternative if the Administrator publishes with the final rule an explanation why that alternative was not adopted. Before EPA establishes any regulatory requirements that may significantly or uniquely affect small governments, including tribal governments, it must have developed under section 203 of the UMRA a small government agency plan. The plan must provide for notifying potentially affected small governments, enabling officials of affected small governments to have meaningful and timely input in the development of EPA regulatory proposals with significant Federal intergovernmental mandates, and informing, educating, and advising small governments on compliance with the regulatory requirements.

EPA has determined that section 202 and 205 requirements do not apply to today's action because this rule does not contain a Federal mandate that may result in annual expenditures of $100 million or more for State, local, and/or tribal governments in the aggregate, or the private sector. Costs to State, local and/or tribal governments already exist under the Georgia program, and today's action does not impose any additional obligations on regulated entities. In fact, EPA's approval of State programs generally may reduce, not increase, compliance costs for the private sector. Further, as it applies to the State, this action does not impose a Federal intergovernmental mandate because UMRA does not include duties arising from participation in a voluntary federal program.

The requirements of section 203 of UMRA also do not apply to today's action because this rule contains no regulatory requirements that might significantly or uniquely affect small governments. Although small governments may be hazardous waste generators, transporters, or own and/or operate TSDFs, they are already subject to the regulatory requirements under the existing State laws that are being authorized by EPA, and, thus, are not subject to any additional significant or unique requirements by virtue of this program approval.

Certification Under the Regulatory Flexibility Act

Pursuant to the Regulatory Flexibility Act (5 U.S.C. 601 *et seq.*, as amended by the Small Business Regulatory Enforcement Fairness Act of 1996), whenever an agency is required to publish a notice of rulemaking for any proposed or final rule, it must prepare and make available for public comment a regulatory flexibility analysis that describes the effect of the rule on small entities (*i.e.*, small businesses, small organizations, and small governmental jurisdictions). This analysis is unnecessary, however, if the agency's administrator certifies that the rule will not have a significant economic impact on a substantial number of small entities.

The EPA has determined that this authorization will not have a significant economic impact on a substantial number of small entities. Such small entities which are hazardous waste generators, transporters, or which own and/or operate TSDFs are already subject to the regulatory requirements under the existing State laws that are now being authorized by EPA. The EPA's authorization does not impose any significant additional burdens on these small entities. This is because EPA's authorization would simply result in an administrative change, rather than a change in the substantive requirements imposed on these small entities.

Pursuant to the provision at 5 U.S.C. 605(b), the Agency hereby certifies that this authorization will not have a significant economic impact on a substantial number of small entities. This authorization approves regulatory requirements under existing State law to which small entities are already subject. It does not impose any new burdens on small entities. This rule, therefore, does not require a regulatory flexibility analysis.

Submission to Congress and the Comptroller General

The Congressional Review Act, 5 U.S.C. 801 *et seq.*, as added by the Small Business Regulatory Enforcement Fairness Act of 1996, generally provides that before a rule may take effect, the agency promulgating the rule must submit a rule report, which includes a copy of the rule, to each House of the Congress, and to the Comptroller General of the United States. The EPA will submit a report containing this rule and other required information to the U.S. Senate, the U.S. House of Representatives and the Comptroller General of the United States prior to publication of the rule in today's **Federal Register**. This rule is not a ''major rule'' as defined by 5 U.S.C. 804(2).

Compliance With Executive Order 12866

The Office of Management and Budget has exempted this rule from the requirements of Executive Order 12866.

Compliance With Executive Order 12875

Under Executive Order 12875, EPA may not issue a regulation that is not required by statute and that creates a mandate upon a State, local, or tribal government, unless the Federal government provides the funds necessary to pay the direct compliance costs incurred by those governments, or EPA consults with those governments. If EPA complies with consulting, Executive Order 12875 requires EPA to provide to the Office of Management and Budget a description of the extent of EPA's prior consultation with representatives of affected State, local, and tribal governments, the nature of their concerns, copies of any written communications from the governments, and a statement supporting the need to issue the regulation. In addition, Executive Order 12875 requires EPA to develop an effective process permitting elected officials and other representatives of State, local, and tribal governments ''to provide meaningful and timely input in the development of regulatory proposals containing significant unfunded mandates.''

This rule does not create a mandate on State, local, or tribal governments. The rule does not impose any enforceable duties on these entities. The State administers its hazardous waste program voluntarily, and any duties on other State, local, or tribal governmental entities arise from that program, not from this action. Accordingly, the requirements of Executive Order 12875 do not apply to this rule.

Compliance With Executive Order 13045

Executive Order 13045, ''Protection of Children from Environmental Health Risks and Safety Risks,'' applies to any rule that: (1) the Office of Management and Budget determines is ''economically significant'' as defined under Executive Order 12866, and (2) concerns an environmental health or safety risk that EPA has reason to believe may have a disproportionate effect on children. If the regulatory action meets both criteria, the Agency must evaluate the environmental health or safety effects of the planned rule on children and explain why the planned regulation is preferable to other potentially effective and reasonably feasible alternatives considered by the Agency.

This rule is not subject to E.O. 13045 because it is not an economically significant rule as defined by E.O. 12866, and because it does not involve decisions based on environmental health or safety risks.

Compliance With Executive Order 13084

Under Executive Order 13084, EPA may not issue a regulation that is not required by statute, that significantly or uniquely affects the communities of Indian tribal governments, and that imposes substantial direct compliance costs on those communities, unless the Federal government provides the funds necessary to pay the direct compliance costs incurred by the tribal governments, or EPA consults with those governments. If EPA complies with consulting, Executive Order 13084 requires EPA to provide to the Office of Management and Budget, in a separately identified section of the preamble to the rule, a description of the extent of EPA's prior consultation with representatives of affected tribal governments, a summary of the nature of their concerns,

and a statement supporting the need to issue the regulation. In addition, Executive Order 13084 requires EPA to develop an effective process permitting elected officials and other representatives of Indian tribal governments ''to provide meaningful and timely input in the development of regulatory policies on matters that significantly or uniquely affect their communities.''

This rule is not subject to E.O. 13084 because it does not significantly or uniquely affect the communities of Indian tribal governments. Georgia is not authorized to implement the RCRA hazardous waste program in Indian country. This action has no effect on the hazardous waste program that EPA implements in Indian country within the State.

Paperwork Reduction Act

Under the Paperwork Reduction Act, 44 U.S.C. 3501 *et seq.*, Federal agencies must consider the paperwork burden imposed by any information request contained in a proposed rule or a final rule. This rule will not impose any information requirements upon the regulated community.

National Technology Transfer and Advancement Act

Section 12(d) of the National Technology Transfer and Advancement Act of 1995 (''NTTAA''), Public Law 104–113, section 12(d) (15 U.S.C. 272 note) directs EPA to use voluntary consensus standards in its regulatory activities unless to do so would be inconsistent with applicable law or otherwise impractical. Voluntary consensus standards are technical standards (e.g., materials specifications, test methods, sampling procedures, and business practices) that are developed or adopted by voluntary consensus standards bodies. The NTTAA directs EPA to provide Congress, through OMB, explanations when the Agency decides not to use available and applicable voluntary consensus standards.

This action does not involve technical standards. Therefore, EPA did not consider the use of any voluntary consensus standards.

List of Subjects in 40 CFR Part 271

Environmental protection, Administrative practice and procedure, Confidential business information, Hazardous waste, Hazardous waste transportation, Incorporation by reference, Indian lands, Intergovernmental relations, Penalties, Reporting and recordkeeping requirements, Water pollution control, Water supply.

Authority: This action is issued under the authority of sections 2002(a), 3006 and 7004(b) of the Solid Waste Disposal Act as amended 42 U.S.C. 6912(a), 6926, 6974(b).

A. Stanley Meiburg,

Acting Regional Administrator, Region 4.

[FR Doc. 99–26191 Filed 10–13–99; 8:45 am]

BILLING CODE 6560–50–P

DEPARTMENT OF DEFENSE

48 CFR Part 209

[DFARS Case 98–D304]

Defense Federal Acquisition Regulation Supplement; Congressional Medal of Honor

AGENCY: Department of Defense (DoD).

ACTION: Final rule.

SUMMARY: The Director of Defense Procurement is adopting as final, without change, an interim rule amending the Defense Federal Acquisition Regulation Supplement (DFARS). The rule implements Section 8118 of the National Defense Appropriations Act for Fiscal Year 1999. Section 8118 prohibits the award of a contract to, extension of a contract with, or approval of the award of a subcontract to any entity that, within the past 15 years, has been convicted of the unlawful manufacture or sale of the Congressional Medal of Honor.

EFFECTIVE DATE: October 14, 1999.

FOR FURTHER INFORMATION CONTACT: Ms. Amy Williams, Defense Acquisition Regulations Council, PDUSD (A&T) DP(DAR), IMD 3D139, 3062 Defense Pentagon, Washington, DC 20301–3062. Telephone (703) 602–0288; telefax (703) 602–0350. Please cite DFARS Case 98–D304.

SUPPLEMENTARY INFORMATION:

A. Background

DoD published an interim rule at 64 FR 31732 on June 14, 1999, to implement Section 8118 of the National Defense Appropriations Act for Fiscal Year 1999 (Public Law 105–262). DoD received no public comments on the interim rule. The interim rule is converted to a final rule without change.

This rule was not subject to Office of Management and Budget review under Executive Order 12866, dated September 30, 1993.

B. Regulatory Flexibility Act

DoD certifies that this final rule will not have a significant economic impact on a substantial number of small entities within the meaning of the Regulatory Flexibility Act, 5 U.S.C. 601, *et seq.*, because the rule applies only to entities that have been convicted of the unlawful manufacture or sale of the Congressional Medal of Honor.

C. Paperwork Reduction Act

The Paperwork Reduction Act does not apply because the rule does not impose any information collection requirements that require the approval of the Office of Management and Budget under 44 U.S.C. 3501, *et seq.*

List of Subjects in 48 CFR Part 209

Government procurement.

Michele P. Peterson,

Executive Editor, Defense Acquisition Regulations Council.

Interim Rule Adopted as Final Without Change

Accordingly, the interim rule amending 48 CFR part 209, which was published at 64 FR 31732 on June 14, 1999, is adopted as a final rule without change.

[FR Doc. 99–26642 Filed 10–13–99; 8:45 am]

BILLING CODE 5000–04–M

DEPARTMENT OF DEFENSE

48 CFR Parts 211, 214, and 252

[DFARS Case 99–D023]

Defense Federal Acquisition Regulation Supplement; Brand Name or Equal Purchase Descriptions

AGENCY: Department of Defense (DoD).

ACTION: Final rule.

SUMMARY: The Director of Defense Procurement has issued a final rule amending the Defense Federal Acquisition Regulation Supplement (DFARS) to remove policy pertaining to use of brand name purchase descriptions. Policy on this subject has been incorporated into the Federal Acquisition Regulation (FAR).

EFFECTIVE DATE: October 14, 1999.

FOR FURTHER INFORMATION CONTACT: Ms. Melissa Rider, Defense Acquisition Regulations Council, PDUSD (A&T) DP (DAR), IMD 3D139, 3062 Defense Pentagon, Washington, DC 20301–3062. Telephone (703) 602–4245; telefax (703) 602–0350. Please cite DFARS Case 99–D023.

SUPPLEMENTARY INFORMATION:

A. Background

This final rule removes the policy at DFARS 211.207–1 and 211.270–2, and the solicitation provision at DFARS 252.211–7003, pertaining to use of ''brand name or equal'' purchase

descriptions. Similar policy on this subject was incorporated into FAR on August 16, 1999 (64 FR 32741, June 17, 1999; Federal Acquisition Circular 97–12, Item II).

This rule was not subject to Office of Management and Budget review under Executive Order 12866, dated September 30, 1993.

B. Regulatory Flexibility Act

This final rule does not constitute a significant revision within the meaning of FAR 1.501 and Public Law 98–577 and publication for public comment is not required. However, DoD will consider comments from small entities concerning the affected DFARS subparts in accordance with 5 U.S.C. 610. Such comments should cite DFARS Case 99–D023.

C. Paperwork Reduction Act

The Paperwork Reduction Act does not apply because the rule does not impose any information collection requirements that require the approval of the Office of Management and Budget under 44 U.S.C. 3501, *et seq.*

List of Subjects in 48 CFR Parts 211, 214, and 252

Government procurement.

Michele P. Peterson

Executive Editor, Defense Acquisition Regulations Council.

Therefore, 48 CFR parts 211, 214, and 252 are amended as follows:

1. The authority citation for 48 CFR parts 211, 214, and 252 continues to read as follows:

Authority: 41 U.S.C. 421 and 48 CFR Chapter 1.

PART 211—DESCRIBING AGENCY NEEDS

211.270 [Removed and Reserved]

2. Section 211.270 is removed and reserved.

211.270–1 and 211.270–2 [Removed]

3. Sections 211.270–1 and 211.270–2 are removed.

PART 214—SEALED BIDDING

214.202–5 [Amended]

4. Section 214.202–5 is amended in paragraph (d) by removing the reference ''252.211–7003'' and adding in its place the reference ''FAR 52.211–6''.

PART 252—SOLICITATION PROVISIONS AND CONTRACT CLAUSES

252.211–7003 [Removed and Reserved]

5. Section 252.211–7003 is removed and reserved.

[FR Doc. 99–26641 Filed 10–13–99; 8:45 am]

BILLING CODE 5000–04–M

DEPARTMENT OF COMMERCE

National Oceanic and Atmospheric Administration

50 CFR Part 635

[Docket No. I.D. 071698B]

RIN 0648–AJ67

Atlantic Highly Migratory Species (HMS) Fisheries; Vessel Monitoring Systems

AGENCY: National Marine Fisheries Service (NMFS), National Oceanic and Atmospheric Administration (NOAA), Commerce.

ACTION: Delay of effectiveness.

SUMMARY: NMFS further delays the effective date of a final rule which required vessel owner/operators to install a NMFS-approved vessel monitoring system (VMS) by January 1, 2000. This document delays the effective date until June 1, 2000.

DATES: On May 28, 1999, NMFS published a final rule amending § 635.69, which established an effective date of September 1, 1999. On August 9, 1999, NMFS delayed the effective date of this final rule until January 1, 2000 (64 FR 43101). This document further delays the effective date until June 1, 2000. The effectiveness of an amendment to §635.69 published July 13, 1999 (64 FR 37705) is also delayed until June 1, 2000.

ADDRESSES: Copies of the Highly Migratory Species Fishery Management Plan (HMS FMP), the final rule and supporting documents can be obtained from Rebecca Lent, Chief, Highly Migratory Species Division, Office of Sustainable Fisheries, NMFS, 1315 East-West Highway, Silver Spring, MD 20910.

FOR FURTHER INFORMATION CONTACT: Jill Stevenson, NMFS, (301) 713–2347, or Buck Sutter (727) 570–5447.

SUPPLEMENTARY INFORMATION: The final regulations to implement the HMS FMP, and Amendment 1 to the Atlantic Billfish Fishery Management Plan included a provision requiring an owner or operator of a commercial vessel permitted to fish for Atlantic HMS under § 635.4 and that fishes with a pelagic longline to install a NMFS-approved VMS unit on board the vessel and operate the VMS unit whenever the vessel leaves port with pelagic longline gear on board. The VMS requirement of the final rule was to be effective September 1, 1999.

At the time of publication of the final rule (May 28, 1999), NMFS indicated that a **Federal Register** announcement would be forthcoming listing the hardware specifications for approved VMS units. Due to unforseen circumstances, NMFS experienced a delay in type-approving suitable units and service providers. Once the type approval process was completed, NMFS published a **Federal Register** document (September 9, 1999, 64 FR 48988) listing NMFS-approved VMS units and communication service providers. In order to allow affected Atlantic HMS pelagic longline fishermen an opportunity to receive adequate notification of approved VMS units, as well as time to purchase and properly install a VMS unit for operation consistent with provisions provided under § 635.69, NMFS delayed until January 1, 2000, the effective date of the final rule (August 9, 1999, 64 FR 43101).

Since that time, NMFS has been developing additional time/area closures to reduce the incidental catch of fish, marine mammals, and other species in the pelagic longline fishery. It is unlikely that such new time/area closures will be implemented prior to June 2000. Therefore, NMFS delays the effective date of the VMS requirements until June 1, 2000, consistent with the current time/area closure in the Mid-Atlantic Bight and any new time/area closures.

Dated: October 7, 1999.

Gary C. Matlock,

Director, Office of Sustainable Fisheries, National Marine Fisheries Service.

[FR Doc. 99–26810 Filed 10–8–99; 4:56 pm]

BILLING CODE 3510–22–F

DEPARTMENT OF COMMERCE

National Oceanic and Atmospheric Administration

50 CFR Part 679

[Docket No. 980826225–8296–02; I.D. 100499B]

Fisheries of the Exclusive Economic Zone off Alaska; Inseason Adjustment to Required Observer Coverage

AGENCY: National Marine Fisheries Service (NMFS), National Oceanic and Atmospheric Administration (NOAA), Commerce.

ACTION: Inseason adjustment; request for comments.

SUMMARY: NMFS issues an interim inseason adjustment to observer coverage requirements for owners/operators of vessels used to participate in the North Pacific groundfish fisheries and that are required to have observers onboard their vessels 30 percent of the vessel's fishing days. This adjustment is necessary to respond to an unanticipated increase in the demand for observers and to avoid jeopardizing the amount and quality of observer data used by NMFS to manage the groundfish fisheries.

DATES: This adjustment is effective from October 8, 1999 through December 31, 1999. Comments must be received at the following address no later than 4:30 p.m., A.l.t., October 29, 1999.

ADDRESSES: Comments may be mailed to Sue Salveson, Assistant Regional Administrator, Sustainable Fisheries Division, Alaska Region, NMFS, P.O. Box 21668, Juneau, AK 99802–1668, Attn: Lori Gravel. Hand delivery or courier delivery of comments may be sent to the Federal Building, 709 West 9th Street, Room 453, Juneau, AK 99801.

FOR FURTHER INFORMATION CONTACT: Sue Salveson, 907–586–7228.

SUPPLEMENTARY INFORMATION: NMFS manages the North Pacific groundfish fisheries in Federal waters off Alaska according to the Fishery Management Plan for Groundfish of the Gulf of Alaska and the Fishery Management Plan for the Groundfish Fishery of the Bering Sea and Aleutians Islands Area (FMPs). The North Pacific Fishery Management Council, under authority of the Magnuson-Stevens Fishery Conservation and Management Act, prepared both FMPs. Regulations governing fishing by U.S. vessels in accordance with the FMPs appear at subpart H of 50 CFR part 600 and 50 CFR part 679.

Observer coverage regulations at § 679.50(c)(1)(v)-(vii) require certain vessels to carry a NMFS-certified observer on board for 30–percent of the vessels' fishing days in each quarter of the year. Recent unanticipated events have increased industry demands for observer coverage, resulting in a shortage of observers necessary to meet regulatory requirements. According to observer contractors, the current shortage of observers can be attributed to several factors, including increased demand for observer coverage as a result of Alaska State Board of Fisheries actions affecting participation criteria in the Bristol Bay red king crab fishery and increased participation in the Pacific cod pot gear fishery by vessels primarily used to fish for crab due to unanticipated closures of several crab fisheries.

Insufficient observer availability generally affects the 30–percent vessels to a greater degree than vessels that are required to have an observer onboard at all times because (1) the number of 30–percent vessels is greater than the number of 100–percent vessels, (2) observer contractors generally have long-standing contracts with 100–percent vessels that are more amenable to long-range planning and deployment of observers, and (3) many 30–percent vessels are diversified into non-groundfish fisheries and operational planning and coordination with contractors for NMFS-certified observers often is on short notice due to the inseason uncertainty of when different fisheries will open or close.

The recent management actions and observer related qualifying criteria associated with the State-managed crab fisheries have resulted in a significant change in the interest of crab fishermen to participate in the 1999 Pacific cod fishery and have created an unprecedented demand for groundfish observers. The resultant shortage of observers to meet this increased demand has affected the short-term ability of contractors to meet industry observer needs, primarily for 30–percent vessels. NMFS believes that this situation jeopardizes observer data availability for the 30–percent fleet by forcing some fishermen to choose between foregoing participation in fisheries in a manner that threatens business solvency and fishing without required observer coverage in a manner that undermines the quality of information NMFS requires to manage the groundfish fisheries.

Therefore, in accordance with § 679.50(e), the Administrator, Alaska Region, NMFS (Regional Administrator), adjusts existing observer coverage requirements set out at § 679.50(c)(v)-(vii), which are based on a calender quarter compliance period, to be based on a 6-month compliance period during the period of July 1, 1999, through December 31, 1999. The Regional Administrator takes this action based on his finding that the recent and unanticipated increase in the demand for observer services and the concurrent shortage of observers to meet this demand could jeopardize compliance with observer coverage requirements and negatively affect the quality of the data NMFS depends on to manage the groundfish fisheries. This adjustment allows owners/operators of vessels required to have 30–percent observer coverage (i.e., vessels are used to participate for more than 3 fishing days in a directed fishery for groundfish in a calendar quarter during the last half of 1999) to satisfy the coverage requirements at § 679.50(c)(v)-(vii) at any time during this 6-month period instead of being constrained to meet these coverage requirements on a quarterly basis. NMFS anticipates that this short-term adjustment will provide vessel owners/operators who require 30–percent coverage more flexibility in coordinating with observer contractor companies to obtain required observer coverage. While the overall level of current observer coverage will not decrease as a result of this adjustment, the adjustment could reduce the amount of observer data collected during the third calendar quarter of 1999 and potentially increase the amount collected during the final quarter of 1999. The impacts of this redistribution of coverage are not known, but are not believed to be significant relative to the benefits of encouraging compliance with the regulatory framework on which NMFS' data requirements are based.

NMFS-certified observer contractors assert that the existing shortage of observers will be alleviated after the first half of October 1999 because State of Alaska induced observer coverage requirements will expire on October 15, when the Bristol Bay red king crab fishery opens; fishermen will have had additional time to coordinate with contractors for required coverage; and the overall demand for observers is expected to diminish with anticipated closures of the inshore and offshore pollock fisheries. Therefore, this short-term adjustment terminates at 0001 hours A.l.t. on January 1, 2000, at which time all vessels will again be required to meet the requirements of § 679.50(c)(v)-(vii) on a quarterly basis.

Classification

The Assistant Administrator for Fisheries, NOAA, finds for

good cause that providing prior notice and public comment or

delaying the effective date of this action is impracticable and contrary to the public interest. Without this interim adjustment, NMFS anticipates increased noncompliance with observer coverage requirements and an overall reduction in the level and quality of observer data collected during the last half of 1999. This impact is undesirable and potentially detrimental to the management of the North Pacific groundfish fisheries. Further, the interim adjustment relieves a restriction on affected industry members and provides a reasonable opportunity for fishermen to coordinate with observer contractors to obtain the required coverage during a 6 month period instead of within a calendar quarter. Under §§ 679.50(e) and 679.25(c)(2), interested persons are invited to submit written comments on this action to the above address until October 29, 1999.

This action is authorized by §§ 679.50 and 679.25 and is exempt from review under E.O. 12866.

Authority: 16 U.S.C. 1801 *et seq.*

Dated: October 7, 1999.

Bruce C. Morehead,

Acting Director, Office of Sustainable Fisheries, National Marine Fisheries Service.

[FR Doc. 99–26811 Filed 10–8–99; 4:56 pm]

BILLING CODE 3510–22–F

Proposed Rules

Federal Register
Vol. 64, No. 198
Thursday, October 14, 1999

This section of the FEDERAL REGISTER contains notices to the public of the proposed issuance of rules and regulations. The purpose of these notices is to give interested persons an opportunity to participate in the rule making prior to the adoption of the final rules.

DEPARTMENT OF TRANSPORTATION

Federal Aviation Administration

14 CFR Part 39

[Docket No. 99–NM–237–AD]

RIN 2120–AA64

Airworthiness Directives; British Aerospace Model BAe 146–100A, –200A, and –300A Series Airplanes

AGENCY: Federal Aviation Administration, DOT.

ACTION: Notice of proposed rulemaking (NPRM).

SUMMARY: This document proposes the supersedure of an existing airworthiness directive (AD), applicable to certain British Aerospace Model BAe 146–100A, –200A, and –300A series airplanes, that currently requires either a one-time non-destructive test (NDT) inspection or a detailed visual inspection for cracking of the fuselage skin in the vicinity of frame 29 between stringers 12 and 13, and repair, if necessary. This action would require that the current thresholds for these inspections be reduced and that repetitive inspections be performed. This proposal is prompted by issuance of mandatory continuing airworthiness information by a foreign civil airworthiness authority. The actions specified by the proposed AD are intended to detect and correct fatigue cracking of the fuselage skin in the specified area, which could result in reduced structural integrity of the airplane.

DATES: Comments must be received by November 15, 1999.

ADDRESSES: Submit comments in triplicate to the Federal Aviation Administration (FAA), Transport Airplane Directorate, ANM–114, Attention: Rules Docket No. 99–NM–237–AD, 1601 Lind Avenue, SW., Renton, Washington 98055–4056. Comments may be inspected at this location between 9:00 a.m. and 3:00 p.m., Monday through Friday, except Federal holidays.

The service information referenced in the proposed rule may be obtained from British Aerospace Regional Aircraft American Support, 13850 Mclearen Road, Herndon, Virginia 20171. This information may be examined at the FAA, Transport Airplane Directorate, 1601 Lind Avenue, SW., Renton, Washington.

FOR FURTHER INFORMATION CONTACT: Norman B. Martenson, Manager, International Branch, ANM–116, FAA, Transport Airplane Directorate, 1601 Lind Avenue, SW., Renton, Washington 98055–4056; telephone (425) 227–2110; fax (425) 227–1149.

SUPPLEMENTARY INFORMATION:

Comments Invited

Interested persons are invited to participate in the making of the proposed rule by submitting such written data, views, or arguments as they may desire. Communications shall identify the Rules Docket number and be submitted in triplicate to the address specified above. All communications received on or before the closing date for comments, specified above, will be considered before taking action on the proposed rule. The proposals contained in this notice may be changed in light of the comments received.

Comments are specifically invited on the overall regulatory, economic, environmental, and energy aspects of the proposed rule. All comments submitted will be available, both before and after the closing date for comments, in the Rules Docket for examination by interested persons. A report summarizing each FAA-public contact concerned with the substance of this proposal will be filed in the Rules Docket.

Commenters wishing the FAA to acknowledge receipt of their comments submitted in response to this notice must submit a self-addressed, stamped postcard on which the following statement is made: ''Comments to Docket Number 99–NM–237–AD.'' The postcard will be date stamped and returned to the commenter.

Availability of NPRMs

Any person may obtain a copy of this NPRM by submitting a request to the FAA, Transport Airplane Directorate, ANM–114, Attention: Rules Docket No. 99–NM–237–AD, 1601 Lind Avenue, SW., Renton, Washington 98055–4056.

Discussion

On September 28, 1998, the FAA issued AD 98–21–06, amendment 39–10814 (63 FR 53550, October 6, 1998), applicable to certain British Aerospace Model BAe 146–100A, –200A, and –300A series airplanes, to require either a one-time non-destructive test (NDT) inspection or a visual inspection for cracking of the fuselage skin in the vicinity of frame 29 between stringers 12 and 13, and repair, if necessary. That action was prompted by issuance of mandatory continuing airworthiness information issued by a foreign civil airworthiness authority, which reported that, during routine inspections, fatigue cracking was found in the specified area. The requirements of that AD are intended to detect and correct fatigue cracking of the fuselage skin in the specified area, which could result in reduced structural integrity of the airplane.

Information Received Since Issuance of Previous AD

Since issuance of that AD, the FAA has been advised of new metallurgical analysis which necessitates changes to the current inspection thresholds and the addition of repetitive inspections.

Explanation of Relevant Service Information

Since the issuance of AD 98–21–06, British Aerospace has issued Service Bulletin SB.53–144, Revision 1, dated May 21, 1999. The inspection procedures described in this revision are identical to those described in the original service bulletin (which was referenced in AD 98–21–06). However, Revision 1 reduces the initial inspection thresholds.

The new revision also adds a closing action which advises operators to refer to a new Significant Structural Item (SSI) entry 53–20–160. The service bulletin and the SSI task recommend the same inspection and initial inspection threshold, but the SSI task also includes intervals for repetitive inspections. This SSI task is identified in the Model BAe 146 Maintenance Review Board (MRB) report.

The Civil Aviation Authority (CAA), which is the airworthiness authority for the United Kingdom, classified Revision 1 of the service bulletin as mandatory in

order to assure the continued airworthiness of these airplanes in the United Kingdom.

FAA's Conclusions

This airplane model is manufactured in the United Kingdom and is type certificated for operation in the United States under the provisions of section 21.29 of the Federal Aviation Regulations (14 CFR 21.29) and the applicable bilateral airworthiness agreement. Pursuant to this bilateral airworthiness agreement, the CAA has kept the FAA informed of the situation described above. The FAA has examined the findings of the CAA, reviewed all available information, and determined that AD action is necessary for products of this type design that are certificated for operation in the United States.

Explanation of Requirements of Proposed Rule

Since an unsafe condition has been identified that is likely to exist or develop on other airplanes of the same type design registered in the United States, the proposed AD would supersede AD 98–21–06 to require accomplishment of the actions specified in the service bulletin described previously, except as discussed below.

Differences Between Proposed Rule and Service Bulletin

Operators should note that, although the service bulletin specifies that the manufacturer may be contacted for disposition of cracking conditions, this proposal would require the repair of those conditions to be accomplished in accordance with a method approved by either the FAA or the CAA (or its delegated agent). In light of the type of repair that would be required to address the identified unsafe condition, and in consonance with existing bilateral airworthiness agreements, the FAA has determined that, for this proposed AD, a repair approved by either the FAA or the CAA would be acceptable for compliance with this proposed AD.

Revision 1 of Service Bulletin SB.53–144 refers to the repetitive inspections identified in MRB new entry SSI 53–20–160, but does not explicitly require that these inspections be performed. The proposed AD would mandate these repetitive inspections directly.

Cost Impact

The FAA estimates that 23 airplanes of U.S. registry would be affected by this proposed AD.

For operators that elect to accomplish the visual inspection rather than the NDT inspection, it would take approximately 6 work hours per airplane to accomplish it, at an average labor rate of $60 per work hour. Based on these figures, the cost impact of the visual inspection on U.S. operators is estimated to be $360 per airplane, per inspection cycle.

For operators that elect to accomplish the NDT inspection rather than the visual inspection, it would take approximately 8 work hours per airplane to accomplish it, at an average labor rate of $60 per work hour. Based on these figures, the cost impact of the NDT inspection on U.S. operators is estimated to be $480 per airplane, per inspection cycle.

The cost impact figures discussed above are based on assumptions that no operator has yet accomplished any of the requirements of this AD action, and that no operator would accomplish those actions in the future if this AD were not adopted.

Regulatory Impact

The regulations proposed herein would not have substantial direct effects on the States, on the relationship between the national government and the States, or on the distribution of power and responsibilities among the various levels of government. Therefore, in accordance with Executive Order 12612, it is determined that this proposal would not have sufficient federalism implications to warrant the preparation of a Federalism Assessment.

For the reasons discussed above, I certify that this proposed regulation (1) is not a ''significant regulatory action'' under Executive Order 12866; (2) is not a ''significant rule'' under the DOT Regulatory Policies and Procedures (44 FR 11034, February 26, 1979); and (3) if promulgated, will not have a significant economic impact, positive or negative, on a substantial number of small entities under the criteria of the Regulatory Flexibility Act. A copy of the draft regulatory evaluation prepared for this action is contained in the Rules Docket. A copy of it may be obtained by contacting the Rules Docket at the location provided under the caption **ADDRESSES**.

List of Subjects in 14 CFR Part 39

Air transportation, Aircraft, Aviation safety, Safety.

The Proposed Amendment

Accordingly, pursuant to the authority delegated to me by the Administrator, the Federal Aviation Administration proposes to amend part 39 of the Federal Aviation Regulations (14 CFR part 39) as follows:

PART 39—AIRWORTHINESS DIRECTIVES

1. The authority citation for part 39 continues to read as follows:

Authority: 49 U.S.C. 106(g), 40113, 44701.

§ 39.13 [Amended]

2. Section 39.13 is amended by removing amendment 39–10814 (63 FR 53550, November 10, 1998), and by adding the following new airworthiness directive:

British Aerospace Regional Aircraft (Formerly British Aerospace Regional Aircraft Limited, Avro International Aerospace Division; British Aerospace, PLC; British Aerospace Commercial Aircraft Limited): Docket 99–NM–237–AD. Supersedes AD 98–21–06, Amendment 39–10814.

Applicability: Model BAe 146–100, –200, and –300 series airplanes; as listed in British Aerospace Service Bulletin SB.53–144, dated April 27, 1998, or Revision 1, dated May 21, 1999; certificated in any category.

Note 1: This AD applies to each airplane identified in the preceding applicability provision, regardless of whether it has been modified, altered, or repaired in the area subject to the requirements of this AD. For airplanes that have been modified, altered, or repaired so that the performance of the requirements of this AD is affected, the owner/operator must request approval for an alternative method of compliance in accordance with paragraph (d) of this AD. The request should include an assessment of the effect of the modification, alteration, or repair on the unsafe condition addressed by this AD; and, if the unsafe condition has not been eliminated, the request should include specific proposed actions to address it.

Compliance: Required as indicated, unless accomplished previously.

To detect and correct fatigue cracking of the fuselage skin in the vicinity of frame 29 between stringers 12 and 13, which could result in reduced structural integrity of the airplane, accomplish the following:

Inspections

(a) Perform either a non-destructive test (NDT) inspection or a detailed visual inspection for cracking of the fuselage skin in the vicinity of frame 29 between stringers 12 and 13, in accordance with British Aerospace Service Bulletin SB.53–144, dated April 27, 1998, or Revision 1, dated May 21, 1999, at the earlier of the applicable times specified in paragraphs (a)(1) and (a)(2).

Note 2: The actions defined in the original issue and Revision 1 of the service bulletin are identical. However, the compliance times and effectivity groupings are different. Accomplishment of either revision level, at the earlier of the applicable compliance times of paragraphs (a)(1) and (a)(2) of this AD, is acceptable for compliance with the requirements of paragraph (a) of this AD.

Note 3: For the purposes of this AD, a detailed inspection is defined as: ''An

intensive visual examination of a specific structural area, system, installation, or assembly to detect damage, failure, or irregularity. Available lighting is normally supplemented with a direct source of good lighting at intensity deemed appropriate by the inspector. Inspection aids such as mirror, magnifying lenses, etc., may be used. Surface cleaning and elaborate access procedures may be required.''

(1) For airplanes identified in the specified paragraph of Service Bulletin SB.53–144, dated April 27, 1998:

(i) Paragraph 1.D.(1)(a): Inspect prior to the accumulation of 12,000 total flight cycles, or within 1,000 flight cycles after November 10, 1998 (the effective date of AD 98–21–06, amendment 39–10814), whichever occurs later.

(ii) Paragraph 1.D.(1)(b): Inspect prior to the accumulation of 16,000 total flight cycles, or within 1,200 flight cycles after November 10, 1998, whichever occurs later.

(iii) Paragraph 1.D.(1)(c): Inspect prior to the accumulation of 13,500 total flight cycles, or within 1,000 flight cycles after November 10, 1998, whichever occurs later.

(iv) Paragraph 1.D.(1)(d): Inspect prior to the accumulation of 22,000 total flight cycles, or within 1,400 flight cycles after November 10, 1998, whichever occurs later.

(2) For airplanes in the applicable configuration specified in Table 1 of Service Bulletin SB.53–144, Revision 1, dated May 21, 1999:

(i) For Model BAe 146–100 airplanes on which Modification HCM00020P has not been accomplished: Inspect prior to the accumulation of 11,600 total flight cycles, or within 1,000 flight cycles after the effective date of this AD, whichever occurs later.

(ii) For Model BAe 146–100 airplanes on which Modification HCM00020P has been accomplished: Inspect prior to the accumulation of 14,500 total flight cycles, or within 1,200 flight cycles after the effective date of this AD, whichever occurs later.

(iii) For Model BAe 146–200 airplanes on which Modification HCM00021J has not been accomplished: Inspect prior to the accumulation of 12,600 total flight cycles, or within 1,000 flight cycles after the effective date of this AD, whichever occurs later.

(iv) For Model BAe 146–200 airplanes on which Modification HCM00021J has been accomplished: Inspect prior to the accumulation of 11,600 total flight cycles, or within 1,000 flight cycles after the effective date of this AD, whichever occurs later.

(v) For Model BAe 146–300 airplanes on which Modification HCM01000B has not been accomplished: Inspect prior to the accumulation of 17,200 total flight cycles, or within 1,400 flight cycles after the effective date of this AD, whichever occurs later.

(b) Repeat the inspections required by paragraph (a) of this AD at the intervals defined in Significant Structural Item (SSI) Task No. 53–20–160 as detailed in Section 6 of the BAe 146 Maintenance Review Board Report, Revision 5, dated November 1998.

Corrective Action

(c) If any cracking is detected during any inspection required by paragraph (a) or (b) of this AD, prior to further flight, repair in accordance with a method approved by either the Manager, International Branch, ANM–116, FAA, Transport Airplane Directorate; or the Civil Aviation Authority (or its delegated agent). For a repair method to be approved by the Manager, International Branch, ANM–116, as required by this paragraph, the manager's approval letter must specifically reference this AD.

Alternative Methods of Compliance

(d) An alternative method of compliance or adjustment of the compliance time that provides an acceptable level of safety may be used if approved by the Manager, International Branch, ANM–116. Operators shall submit their requests through an appropriate FAA Principal Maintenance Inspector, who may add comments and then send it to the Manager, International Branch, ANM–116.

Note 4: Information concerning the existence of approved alternative methods of compliance with this AD, if any, may be obtained from the International Branch, ANM–116.

(e) Special flight permits may be issued in accordance with sections 21.197 and 21.199 of the Federal Aviation Regulations (14 CFR 21.197 and 21.199) to operate the airplane to a location where the requirements of this AD can be accomplished.

Note 5: The subject of this AD is addressed in British airworthiness directive 005–04–98.

Issued in Renton, Washington, on October 7, 1999.

D.L. Riggin,

Acting Manager, Transport Airplane Directorate, Aircraft Certification Service.

[FR Doc. 99–26868 Filed 10–13–99; 8:45 am]

BILLING CODE 4910–13–P

DEPARTMENT OF TRANSPORTATION

Federal Aviation Administration

14 CFR Part 39

[Docket No. 99–NM–80–AD]

RIN 2120–AA64

Airworthiness Directives; Raytheon Model BAe.125 Series 1000A and 1000B Airplanes and Model Hawker 1000 Series Airplanes

AGENCY: Federal Aviation Administration, DOT.

ACTION: Notice of proposed rulemaking (NPRM).

SUMMARY: This document proposes the adoption of a new airworthiness directive (AD) that is applicable to all Raytheon Model BAe.125 series 1000A and 1000B airplanes and Model Hawker 1000 series airplanes. This proposal would require an inspection to determine the integrity of the duct connection on both ends of the turbine air discharge duct in the air conditioning system, an inspection to measure the bead height on the ends of the turbine air discharge duct; and corrective actions, if necessary. This proposal is prompted by reports indicating that the turbine air discharge duct disconnected from the cold air unit (CAU) or water separator due to insufficient bead height on the ends of the turbine air discharge duct. The actions specified by the proposed AD are intended to prevent such disconnection from the CAU or water separator, which could result in cabin depressurization.

DATES: Comments must be received by November 29, 1999.

ADDRESSES: Submit comments in triplicate to the Federal Aviation Administration (FAA), Transport Airplane Directorate, ANM–114, Attention: Rules Docket No. 99–NM–80–AD, 1601 Lind Avenue, SW., Renton, Washington 98055–4056. Comments may be inspected at this location between 9:00 a.m. and 3:00 p.m., Monday through Friday, except Federal holidays.

The service information referenced in the proposed rule may be obtained from Raytheon Aircraft Company, Manager Service Engineering, Hawker Customer Support Department, P.O. Box 85, Wichita, Kansas 67201–0085. This information may be examined at the FAA, Transport Airplane Directorate, 1601 Lind Avenue, SW., Renton, Washington; or at the FAA, Small Airplane Directorate, Wichita Aircraft Certification Office, 1801 Airport Road, Room 100, Mid-ContinentAirport, Wichita, Kansas.

FOR FURTHER INFORMATION CONTACT: Paul C. DeVore, Aerospace Engineer, Systems and Propulsion Branch, ACE–116W, FAA, Small Airplane Directorate, Wichita Aircraft Certification Office, 1801 Airport Road, Room 100, Mid-Continent Airport, Wichita, Kansas 67209; telephone (316) 946–4142; fax (316) 946–4407.

SUPPLEMENTARY INFORMATION:

Comments Invited

Interested persons are invited to participate in the making of the proposed rule by submitting such written data, views, or arguments as they may desire. Communications shall identify the Rules Docket number and be submitted in triplicate to the address specified above. All communications received on or before the closing date for comments, specified above, will be considered before taking action on the proposed rule. The proposals contained in this notice may be changed in light of the comments received.

Comments are specifically invited on the overall regulatory, economic, environmental, and energy aspects of the proposed rule. All comments submitted will be available, both before and after the closing date for comments, in the Rules Docket for examination by interested persons. A report summarizing each FAA-public contact concerned with the substance of this proposal will be filed in the Rules Docket.

Commenters wishing the FAA to acknowledge receipt of their comments submitted in response to this notice must submit a self-addressed, stamped postcard on which the following statement is made: ''Comments to Docket Number 99–NM–80–AD.'' The postcard will be date stamped and returned to the commenter.

Availability of NPRMs

Any person may obtain a copy of this NPRM by submitting a request to the FAA, Transport Airplane Directorate, ANM–114, Attention: Rules Docket No. 99–NM–80–AD, 1601 Lind Avenue, SW., Renton, Washington 98055–4056.

Discussion

The FAA has received several reports indicating that the turbine air discharge duct disconnected from the cold air unit (CAU) or water separator in flight on Raytheon Model BAe.125 series 1000A and 1000B airplanes and Model Hawker 1000 series airplanes during flight. Investigation revealed that the bead height on the ends of the turbine air discharge duct was smaller than the design requirement, which could allow the rubber connecting sleeves to disconnect. Disconnection of the turbine air discharge duct from the CAU or water separator could result in loss of normal air supply to maintain cabin pressurization.

Explanation of Relevant Service Information

The FAA has reviewed and approved Raytheon Aircraft Service Bulletin SB 21–3108, dated November 1998, which describes procedures for a one-time visual inspection to determine the integrity of the duct connection on both ends of the turbine air discharge duct in the air conditioning system; a one-time detailed inspection to measure the bead height on the ends of the turbine air discharge duct; and corrective actions, if necessary. The corrective actions involve adjustment of the clamps, and either rework of the duct or replacement of the duct with a new duct. Accomplishment of the actions specified in the service bulletin is intended to adequately address the identified unsafe condition.

Explanation of Requirements of Proposed Rule

Since an unsafe condition has been identified that is likely to exist or develop on other products of this same type design, the proposed AD would require accomplishment of the actions specified in the service bulletin described previously.

Cost Impact

There are approximately 52 airplanes of the affected design in the worldwide fleet. The FAA estimates that 35 airplanes of U.S. registry would be affected by this proposed AD, that it would take approximately 9 work hours per airplane to accomplish the proposed actions, and that the average labor rate is $60 per work hour. Based on these figures, the cost impact of the proposed AD on U.S. operators is estimated to be $18,900, or $540 per airplane.

The cost impact figure discussed above is based on assumptions that no operator has yet accomplished any of the proposed requirements of this AD action, and that no operator would accomplish those actions in the future if this AD were not adopted.

Regulatory Impact

The regulations proposed herein would not have substantial direct effects on the States, on the relationship between the national government and the States, or on the distribution of power and responsibilities among the various levels of government. Therefore, in accordance with Executive Order 12612, it is determined that this proposal would not have sufficient federalism implications to warrant the preparation of a Federalism Assessment.

For the reasons discussed above, I certify that this proposed regulation (1) is not a ''significant regulatory action'' under Executive Order 12866; (2) is not a ''significant rule'' under the DOT Regulatory Policies and Procedures (44 FR 11034, February 26, 1979); and (3) if promulgated, will not have a significant economic impact, positive or negative, on a substantial number of small entities under the criteria of the Regulatory Flexibility Act. A copy of the draft regulatory evaluation prepared for this action is contained in the Rules Docket. A copy of it may be obtained by contacting the Rules Docket at the location provided under the caption **ADDRESSES**.

List of Subjects in 14 CFR Part 39

Air transportation, Aircraft, Aviation safety, Safety.

The Proposed Amendment

Accordingly, pursuant to the authority delegated to me by the Administrator, the Federal Aviation Administration proposes to amend part 39 of the Federal Aviation Regulations (14 CFR part 39) as follows:

PART 39—AIRWORTHINESS DIRECTIVES

1. The authority citation for part 39 continues to read as follows:

Authority: 49 U.S.C. 106(g), 40113, 44701.

§ 39.13 [Amended]

2. Section 39.13 is amended by adding the following new airworthiness directive:

Raytheon Aircraft Company (Formerly Beech): Docket 99–NM–80–AD. Applicability: All Model BAe.125 series 1000A and 1000B airplanes and Model Hawker 1000 series airplanes, certificated in any category.

Note 1: This AD applies to each airplane identified in the preceding applicability provision, regardless of whether it has been modified, altered, or repaired in the area subject to the requirements of this AD. For airplanes that have been modified, altered, or repaired so that the performance of the requirements of this AD is affected, the owner/operator must request approval for an alternative method of compliance in accordance with paragraph (d) of this AD. The request should include an assessment of the effect of the modification, alteration, or repair on the unsafe condition addressed by this AD; and, if the unsafe condition has not been eliminated, the request should include specific proposed actions to address it.

Compliance: Required as indicated, unless accomplished previously.

To prevent the turbine air discharge duct in the air conditioning system from disconnecting from the CAU or water separator in flight, which could result in cabin depressurization, accomplish the following:

Inspections

(a) Within 25 flight hours after the effective date of this AD, perform a general visual inspection to determine the integrity of the duct connections (i.e., ensure that the duct and securing clamps are in place, the sleeve is central to the joint gap, and the clamps are clear of the duct bead) on both ends of the turbine air discharge duct in accordance with Raytheon Service Bulletin SB 21–3108, dated November 1998. If any discrepancy is detected, prior to further flight, adjust the clamps in accordance with the service bulletin.

Note 2: For the purposes of this AD, a general visual inspection is defined as: ''A visual examination of an interior or exterior area, installation, or assembly to detect obvious damage, failure, or irregularity. This level of inspection is made under normally available lighting conditions such as daylight, hangar lighting, flashlight, or drop-

light, and may require removal or opening of access panels or doors. Stands, ladders, or platforms may be required to gain proximity to the area being checked.''

(b) Within 300 flight hours or 6 months after the effective date of this AD, whichever occurs first, perform a one-time detailed inspection to measure the bead height on the ends of the turbine air discharge duct in accordance with Raytheon Service Bulletin SB 21–3108, dated November 1998. If the bead height does not conform to the dimension shown in the service bulletin, prior to further flight, either rework the duct or replace the duct with a new duct, in accordance with the service bulletin.

Note 3: For the purposes of this AD, a detailed inspection is defined as: ''An intensive visual examination of a specific structural area, system, installation, or assembly to detect damage, failure, or irregularity. Available lighting is normally supplemented with a direct source of good lighting at intensity deemed appropriate by the inspector. Inspection aids such as mirror, magnifying lenses, etc., may be used. Surface cleaning and elaborate access procedures may be required.''

Spares

(c) As of the effective date of this AD, no person shall install a turbine air discharge duct, part number 25–9VF425–1A, on any airplane, unless that duct has been inspected in accordance with Part II of Raytheon Service Bulletin SB 21–3108, dated November 1998.

Alternative Methods of Compliance

(d) An alternative method of compliance or adjustment of the compliance time that provides an acceptable level of safety may be used if approved by the Manager, Wichita Aircraft Certification Office (ACO), FAA, Small Airplane Directorate. Operators shall submit their requests through an appropriate FAA Principal Maintenance Inspector, who may add comments and then send it to the Manager, Wichita ACO.

Note 4: Information concerning the existence of approved alternative methods of compliance with this AD, if any, may be obtained from the Wichita ACO.

Special Flight Permits

(e) Special flight permits may be issued in accordance with sections 21.197 and 21.199 of the Federal Aviation Regulations (14 CFR 21.197 and 21.199) to operate the airplane to a location where the requirements of this AD can be accomplished.

Issued in Renton, Washington, on October 7, 1999.

D.L. Riggin,

Acting Manager, Transport Airplane Directorate, Aircraft Certification Service.

[FR Doc. 99–26869 Filed 10–13–99; 8:45 am]

BILLING CODE 4910–13–P

DEPARTMENT OF TRANSPORTATION

Federal Aviation Administration

14 CFR Part 39

[Docket No. 99–NM–165–AD]

RIN 2120–AA64

Airworthiness Directives; Bombardier Model DHC–7 Series Airplanes

AGENCY: Federal Aviation Administration, DOT.

ACTION: Notice of proposed rulemaking (NPRM).

SUMMARY: This document proposes the adoption of a new airworthiness directive (AD) that is applicable to certain Bombardier Model DHC–7 series airplanes. This proposal would require a one-time visual inspection to detect corrosion on the upper half of the lower longerons on the inboard nacelles; and corrective actions, if necessary. This proposal also would require modification of the upper and lower longeron halves. This proposal is prompted by issuance of mandatory continuing airworthiness information by a foreign civil airworthiness authority. The actions specified by the proposed AD are intended to detect and correct corrosion in the upper halves of the left and right hand lower longerons on the inboard nacelles, which could result in a landing gear failure.

DATES: Comments must be received by November 15, 1999.

ADDRESSES: Submit comments in triplicate to the Federal Aviation Administration (FAA), Transport Airplane Directorate, ANM–114, Attention: Rules Docket No. 99–NM–165–AD, 1601 Lind Avenue, SW., Renton, Washington 98055–4056. Comments may be inspected at this location between 9:00 a.m. and 3:00 p.m., Monday through Friday, except Federal holidays.

The service information referenced in the proposed rule may be obtained from Bombardier, Inc., Bombardier Regional Aircraft Division, Garratt Boulevard, Downsview, Ontario M3K 1Y5, Canada. This information may be examined at the FAA, Transport Airplane Directorate, 1601 Lind Avenue, SW., Renton, Washington; or at the FAA, Engine and Propeller Directorate, New York Aircraft Certification Office, 10 Fifth Street, Third Floor, Valley Stream, New York.

FOR FURTHER INFORMATION CONTACT: Franco Pieri, Aerospace Engineer, Airframe and Propulsion Branch, ANE–171, FAA, Engine and Propeller Directorate, New York Aircraft Certification Office, 10 Fifth Street, Third Floor, Valley Stream, New York 11581; telephone (516) 256–7526; fax (516) 568–2716.

SUPPLEMENTARY INFORMATION:

Comments Invited

Interested persons are invited to participate in the making of the proposed rule by submitting such written data, views, or arguments as they may desire. Communications shall identify the Rules Docket number and be submitted in triplicate to the address specified above. All communications received on or before the closing date for comments, specified above, will be considered before taking action on the proposed rule. The proposals contained in this notice may be changed in light of the comments received.

Comments are specifically invited on the overall regulatory, economic, environmental, and energy aspects of the proposed rule. All comments submitted will be available, both before and after the closing date for comments, in the Rules Docket for examination by interested persons. A report summarizing each FAA-public contact concerned with the substance of this proposal will be filed in the Rules Docket.

Commenters wishing the FAA to acknowledge receipt of their comments submitted in response to this notice must submit a self-addressed, stamped postcard on which the following statement is made: ''Comments to Docket Number 99–NM–165–AD.'' The postcard will be date stamped and returned to the commenter.

Availability of NPRMs

Any person may obtain a copy of this NPRM by submitting a request to the FAA, Transport Airplane Directorate, ANM–114, Attention: Rules Docket No. 99–NM–165–AD, 1601 Lind Avenue, SW., Renton, Washington 98055–4056.

Discussion

Transport Canada Civil Aviation (TCCA), which is the airworthiness authority for Canada, notified the FAA that an unsafe condition may exist on certain Bombardier Model DHC–7 series airplanes. TCCA advises that severely corroded areas have been found in the upper halves of the left and right lower longerons on the inboard engine nacelles. The corrosion was caused by accumulation of moisture in the vicinity of the longeron cavities and around or under retaining bolt seats. This condition, if not corrected, could result in landing gear failure.

Explanation of Relevant Service Information

Bombardier has issued Service Bulletin S.B. 7–54–19, Revision 'C,' dated April 16, 1999, which describes procedures for a one-time visual inspection to detect corrosion on the upper half of the lower longerons on the inboard nacelles; and corrective actions, if necessary. The corrective actions involve blending out corroded areas; performing a fluorescent penetrant or eddy current inspection to detect cracks in areas where corrosion was blended out; and repair or replacement of the longeron with a new longeron, if necessary. The service bulletin also describes procedures for modification of the upper and lower longeron halves. The modification involves drilling drainage holes through the upper and lower longeron halves; finishing all cleaned surfaces with alodine and chromate epoxy primer; refinishing the longeron assembly with polyurethane paint; and applying an anti-corrosion compound. Accomplishment of the actions specified in the service bulletin is intended to adequately address the identified unsafe condition. TCCA classified this service bulletin as mandatory and issued Canadian airworthiness directive CF–99–07, dated March 15, 1999, in order to assure the continued airworthiness of these airplanes in Canada.

FAA's Conclusions

This airplane model is manufactured in Canada and is type certificated for operation in the United States under the provisions of section 21.29 of the Federal Aviation Regulations (14 CFR 21.29) and the applicable bilateral airworthiness agreement. Pursuant to this bilateral airworthiness agreement, TCCA has kept the FAA informed of the situation described above. The FAA has examined the findings of TCCA, reviewed all available information, and determined that AD action is necessary for products of this type design that are certificated for operation in the United States.

Explanation of Requirements of Proposed Rule

Since an unsafe condition has been identified that is likely to exist or develop on other airplanes of the same type design registered in the United States, the proposed AD would require accomplishment of the actions specified in the service bulletin described previously, except as discussed below.

Differences Between Proposed Rule and Service Bulletin

Operators should note that, although the service bulletin specifies that the manufacturer may be contacted for disposition of certain cracks, this proposal would require the repair of those conditions to be accomplished in accordance with a method approved by either the FAA, or TCCA (or it's delegated agent). In light of the type of repair that would be required to address the identified unsafe condition, and in consonance with existing bilateral airworthiness agreements, the FAA has determined that, for this proposed AD, a repair approved by either the FAA or TCCA (or it's delegated agent) would be acceptable for compliance with this proposed AD.

Cost Impact

The FAA estimates that 32 airplanes of U.S. registry would be affected by this proposed AD.

It would take approximately 8 work hours per airplane to accomplish the proposed inspection, at an average labor rate of $60 per work hour. Based on these figures, the cost impact of the proposed AD on U.S. operators is estimated to be $15,360, or $480 per airplane.

It would take approximately 12 work hours per airplane to accomplish the proposed modification, at an average labor rate of $60 per work hour. Based on these figures, the cost impact of the modification proposed by this AD on U.S. operators is estimated to be $23,040, or $720 per airplane.

The cost impact figures discussed above are based on the assumption that no operator has yet accomplished any of the proposed requirements of this AD action, and that no operator would accomplish those actions in the future if this AD were not adopted.

Regulatory Impact

The regulations proposed herein would not have substantial direct effects on the States, on the relationship between the national government and the States, or on the distribution of power and responsibilities among the various levels of government. Therefore, in accordance with Executive Order 12612, it is determined that this proposal would not have sufficient federalism implications to warrant the preparation of a Federalism Assessment.

For the reasons discussed above, I certify that this proposed regulation (1) Is not a ''significant regulatory action'' under Executive Order 12866; (2) is not a ''significant rule'' under the DOT Regulatory Policies and Procedures (44 FR 11034, February 26, 1979); and (3) if promulgated, will not have a significant economic impact, positive or negative, on a substantial number of small entities under the criteria of the Regulatory Flexibility Act. A copy of the draft regulatory evaluation prepared for this action is contained in the Rules Docket. A copy of it may be obtained by contacting the Rules Docket at the location provided under the caption **ADDRESSES**.

List of Subjects in 14 CFR Part 39

Air transportation, Aircraft, Aviation safety, Safety.

The Proposed Amendment

Accordingly, pursuant to the authority delegated to me by the Administrator, the Federal Aviation Administration proposes to amend part 39 of the Federal Aviation Regulations (14 CFR part 39) as follows:

PART 39—AIRWORTHINESS DIRECTIVES

1. The authority citation for part 39 continues to read as follows:

Authority: 49 U.S.C. 106(g), 40113, 44701.

§ 39.13 [Amended]

2. Section 39.13 is amended by adding the following new airworthiness directive:

Bombardier, Inc. (Formerly de Havilland, Inc.): Docket 99–NM–165–AD.

Applicability: Model DHC–7 series airplanes, serial numbers 004 through 113 inclusive, except serial numbers 037 and 061; certificated in any category.

Note 1: This AD applies to each airplane identified in the preceding applicability provision, regardless of whether it has been modified, altered, or repaired in the area subject to the requirements of this AD. For airplanes that have been modified, altered, or repaired so that the performance of the requirements of this AD is affected, the owner/operator must request approval for an alternative method of compliance in accordance with paragraph (d) of this AD. The request should include an assessment of the effect of the modification, alteration, or repair on the unsafe condition addressed by this AD; and, if the unsafe condition has not been eliminated, the request should include specific proposed actions to address it.

Compliance: Required as indicated, unless accomplished previously.

To detect and correct corrosion in the upper halves of the left and right hand lower longerons on the inboard nacelles, which could result in a landing gear failure, accomplish the following:

Inspection

(a) Within 6 months after the effective date of this AD, perform a visual inspection to detect corrosion on the upper half of the

lower longerons on the inboard nacelles in accordance with Bombardier Service Bulletin S.B. 7–54–19, Revision 'C,' dated April 16, 1999.

Modification

(b) If no corrosion is detected, prior to further flight, modify the upper and lower longeron halves in accordance with Bombardier Service Bulletin S.B. 7–54–19, Revision 'C,' dated April 16, 1999.

Corrective Action

(c) If any corrosion is detected, prior to further flight, accomplish the actions specified in paragraph (c)(1) or (c)(2) of this AD, as applicable, in accordance with Bombardier Service Bulletin S.B. 7–54–19, Revision 'C,' dated April 16, 1999.

(1) For corrosion that is within the limits specified in the service bulletin: Accomplish the corrective actions specified in the service bulletin, and perform a fluorescent penetrant inspection or high frequency eddy current inspection to detect cracks in areas where corrosion was blended out. The corrective actions and inspections shall be done in accordance with the service bulletin.

(i) If no crack is detected, prior to further flight, modify the upper and lower longeron halves in accordance with the service bulletin.

(ii) If any crack is detected, prior to further flight, accomplish the actions required by paragraphs (c)(1)(ii)(A) and (c)(1)(ii)(B) of this AD.

(A) Either replace the longeron with a new longeron in accordance with the service bulletin, or repair in accordance with a method approved by either the Manager, New York Aircraft Certification Office (ACO), FAA, Engine and Propeller Directorate; or Transport Canada Civil Aviation (or it's delegated agent). For a repair method to be approved by the Manager, New York ACO, as required by this paragraph, the Manager's approval letter must specifically reference this AD.

(B) Modify the upper and lower longeron halves in accordance with the service bulletin.

(2) For corrosion that exceeds the limits specified in the service bulletin: Accomplish the actions required in paragraphs (c)(1)(ii)(A) and (c)(1)(ii)(B) of this AD.

Alternative Methods of Compliance

(d) An alternative method of compliance or adjustment of the compliance time that provides an acceptable level of safety may be used if approved by the Manager, New York ACO, FAA, Engine and Propeller Directorate. Operators shall submit their requests through an appropriate FAA Principal Maintenance Inspector, who may add comments and then send it to the Manager, New York ACO.

Note 2: Information concerning the existence of approved alternative methods of compliance with this AD, if any, may be obtained from the New York ACO.

Special Flight Permits

(e) Special flight permits may be issued in accordance with sections 21.197 and 21.199 of the Federal Aviation Regulations (14 CFR 21.197 and 21.199) to operate the airplane to a location where the requirements of this AD can be accomplished.

Note 3: The subject of this AD is addressed in Canadian airworthiness directive CF–99–07, dated March 15, 1999.

Issued in Renton, Washington, on October 7, 1999.

D.L. Riggin,

Acting Manager, Transport Airplane Directorate, Aircraft Certification Service.

[FR Doc. 99–26870 Filed 10–13–99; 8:45 am]

BILLING CODE 4910–13–P

DEPARTMENT OF TRANSPORTATION

Federal Aviation Administration

14 CFR Part 39

[Docket No. 96–NM–92–AD]

RIN 2120–AA64

Airworthiness Directives; Airbus Model A319 and A320 Series Airplanes

AGENCY: Federal Aviation Administration, DOT.

ACTION: Supplemental notice of proposed rulemaking; reopening of comment period.

SUMMARY: This document revises an earlier proposed airworthiness directive (AD), applicable to certain Airbus Model A320 series airplanes, that would have required repetitive inspections to detect cracking and delamination of the containers in which the off-wing emergency evacuation slides are stored, and corrective actions, if necessary. If cracking and delamination in excess of certain limits are found, the proposed AD would have required replacement of the slide with a modified slide, which would have terminated the inspection requirement. This new action revises the proposed rule by requiring an additional modification of the slides; accomplishment of both modifications of the slides would terminate the requirement for repetitive inspections. This proposal is prompted by issuance of mandatory continuing airworthiness information by a foreign civil airworthiness authority. The actions specified by this new proposed AD are intended to prevent the loss of the escape slides during flight, which could make the emergency exits located over each wing unusable and result in damage to the fuselage.

DATES: Comments must be received by November 3, 1999.

ADDRESSES: Submit comments in triplicate to the Federal Aviation Administration (FAA), Transport Airplane Directorate, ANM–114, Attention: Rules Docket No. 96–NM–92–AD, 1601 Lind Avenue, SW., Renton, Washington 98055–4056. Comments may be inspected at this location between 9:00 a.m. and 3:00 p.m., Monday through Friday, except Federal holidays.

The service information referenced in the proposed rule may be obtained from Airbus Industrie, 1 Rond Point Maurice Bellonte, 31707 Blagnac Cedex, France. This information may be examined at the FAA, Transport Airplane Directorate, 1601 Lind Avenue, SW., Renton, Washington.

FOR FURTHER INFORMATION CONTACT: Norman B. Martenson, Manager, International Branch, ANM–116, FAA, Transport Airplane Directorate, 1601 Lind Avenue, SW., Renton, Washington 98055–4056; telephone (425) 227–2110; fax (425) 227–1149.

SUPPLEMENTARY INFORMATION:

Comments Invited

Interested persons are invited to participate in the making of the proposed rule by submitting such written data, views, or arguments as they may desire. Communications shall identify the Rules Docket number and be submitted in triplicate to the address specified above. All communications received on or before the closing date for comments, specified above, will be considered before taking action on the proposed rule. The proposals contained in this notice may be changed in light of the comments received.

Comments are specifically invited on the overall regulatory, economic, environmental, and energy aspects of the proposed rule. All comments submitted will be available, both before and after the closing date for comments, in the Rules Docket for examination by interested persons. A report summarizing each FAA-public contact concerned with the substance of this proposal will be filed in the Rules Docket.

Commenters wishing the FAA to acknowledge receipt of their comments submitted in response to this notice must submit a self-addressed, stamped postcard on which the following statement is made: ''Comments to Docket Number 96–NM–92–AD.'' The postcard will be date stamped and returned to the commenter.

Availability of NPRMs

Any person may obtain a copy of this NPRM by submitting a request to the FAA, Transport Airplane Directorate, ANM–114, Attention: Rules Docket No. 96–NM–92–AD, 1601 Lind Avenue, SW., Renton, Washington 98055–4056.

Discussion

A proposal to amend part 39 of the Federal Aviation Regulations (14 CFR part 39) to add an airworthiness directive (AD), applicable to certain Airbus Model A320 series airplanes, was published as a notice of proposed rulemaking (NPRM) in the **Federal Register** on January 14, 1997 (62 FR 1861). That NPRM would have required repetitive inspections to detect cracking and delamination of the containers in which the left and right off-wing emergency evacuation slides are stored, and repair, if necessary. If cracking and delamination in excess of certain limits are found, that proposed AD also would have required replacement of the slide with a modified slide, which would have terminated the requirement for repetitive inspections; and replacement of the discrepant container with a serviceable container. That NPRM was prompted by a report indicating that a slide deployed during flight, which resulted in the loss of the slide and the container door. That condition, if not corrected, could make the emergency exits located over each wing unusable and result in damage to the fuselage.

Actions Since Issuance of Previous Proposal

Since the issuance of that NPRM, the Direction Générale de l'Aviation Civile (DGAC), which is the airworthiness authority for France, has advised the FAA that, although repackaging of the slide was previously thought to be sufficient to prevent loss of container doors and consequent loss of escape slides, inservice inspections have revealed that interference may still be present even with correctly packed slides. Therefore, the DGAC no longer considers that modification of the slides as described in Airbus Service Bulletin A320–25–1156, dated June 21, 1995, will eliminate the need for repetitive inspections of the slides.

Explanation of Relevant Service Information

Airbus has issued Service Bulletin A320–25–1161, Revision 01, dated February 2, 1999. The inspection procedures described in this service bulletin are identical to the previous revision. However, this revision includes Airbus Model A319 series airplanes in the effectivity, adds references to an additional modification of the offwing escape slides, and updates certain service bulletin references to later revisions.

Airbus also has issued Service Bulletin A320–25–1156, Revision 01, dated February 2, 1999, which describes procedures for an additional modification of the offwing escape slides. The new modification involves structurally enhancing the container door by replacing frangible washers with solid ring retainers. The modification also involves inspecting each slide as described in A320–25–1161, Revision 01, repairing, if necessary, and repacking the slide. Accomplishment of this modification, in addition to the modification specified in the original service bulletin, would eliminate the need for the repetitive inspections of the escape slide containers. The Airbus service bulletin references Air Cruisers Service Bulletins 004–25–37, Revision 2, dated May 29, 1996, and 004–25–42, dated September 16, 1996, as additional sources of service information for accomplishment of the modifications.

Accomplishment of the actions specified in the Airbus service bulletins is intended to adequately address the identified unsafe condition. The DGAC classified Airbus Service Bulletin A320–25–1161, Revision 01, dated February 2, 1999, as mandatory and issued French airworthiness directive 1999–232–132(B), dated June 2, 1999, in order to assure the continued airworthiness of these airplanes in France.

Conclusion

This supplemental NPRM proposes to add a requirement for modification of the slides in accordance with Airbus Service Bulletin A320–25–1156, Revision 01, dated February 2, 1999, which would terminate the requirement for repetitive inspections. This supplemental NPRM would also revise the applicability to add Airbus Model A319 series airplanes, and to exclude airplanes on which the terminating modification has been accomplished in production or in service. Since certain of these changes expand the scope of the originally proposed rule, the FAA has determined that it is necessary to reopen the comment period to provide additional opportunity for public comment.

Differences Between Proposed Rule and French AD

The proposed AD would differ from the parallel French airworthiness directive in that it would mandate the accomplishment of the modifications of the offwing escape slides within 5 years, which would constitute terminating action for the repetitive inspections required by this AD. The French airworthiness directive provides for that action as optional. Mandating the terminating action is based on the FAA's determination that long-term continued operational safety will be better assured by modifications or design changes to remove the source of the problem, rather than by repetitive inspections. Long-term inspections may not be providing the degree of safety assurance necessary for the transport airplane fleet. This, coupled with a better understanding of the human factors associated with numerous continual inspections, has led the FAA to consider placing less emphasis on inspections and more emphasis on design improvements. The proposed modification requirement is consistent with these conditions.

Cost Impact

The FAA estimates that 121 airplanes of U.S. registry would be affected by this proposed AD.

It would take approximately 5 work hours per airplane to accomplish the proposed inspection, at an average labor rate of $60 per work hour. Based on these figures, the cost impact of the proposed inspection on U.S. operators is estimated to be $36,300, or $300 per airplane, per inspection cycle.

It would take approximately 6 work hours per airplane to accomplish the proposed modifications, at an average labor rate of $60 per work hour. Required parts would cost approximately $170 per airplane. Based on these figures, the cost impact of the proposed modifications on U.S. operators is estimated to be $64,130, or $530 per airplane.

The cost impact figures discussed above are based on assumptions that no operator has yet accomplished any of the proposed requirements of this AD action, and that no operator would accomplish those actions in the future if this AD were not adopted.

Regulatory Impact

The regulations proposed herein would not have substantial direct effects on the States, on the relationship between the national government and the States, or on the distribution of power and responsibilities among the various levels of government. Therefore, in accordance with Executive Order 12612, it is determined that this proposal would not have sufficient federalism implications to warrant the preparation of a Federalism Assessment.

For the reasons discussed above, I certify that this proposed regulation (1) is not a ''significant regulatory action'' under Executive Order 12866; (2) is not a ''significant rule'' under the DOT Regulatory Policies and Procedures (44 FR 11034, February 26, 1979); and (3) if promulgated, will not have a significant economic impact, positive or negative,

on a substantial number of small entities under the criteria of the Regulatory Flexibility Act. A copy of the draft regulatory evaluation prepared for this action is contained in the Rules Docket. A copy of it may be obtained by contacting the Rules Docket at the location provided under the caption **ADDRESSES**.

List of Subjects in 14 CFR Part 39

Air transportation, Aircraft, Aviation safety, safety.

The Proposed Amendment

Accordingly, pursuant to the authority delegated to me by the Administrator, the Federal Aviation Administration proposes to amend part 39 of the Federal Aviation Regulations (14 CFR part 39) as follows:

PART 39—AIRWORTHINESS DIRECTIVES

1. The authority citation for part 39 continues to read as follows:

Authority: 49 U.S.C. 106(g), 40113, 44701.

§ 39.13 [Amended]

2. Section 39.13 is amended by adding the following new airworthiness directive:

Airbus Industrie: Docket 96–NM–92–AD.

Applicability: Model A319 and A320 series airplanes, certificated in any category; except airplanes on which Airbus Modifications 24850 and 25844 have been installed in production, or on which Airbus Service Bulletin A320–25–1156, Revision 01, dated February 2, 1999, has been accomplished.

Note 1: This AD applies to each airplane identified in the preceding applicability provision, regardless of whether it has been otherwise modified, altered, or repaired in the area subject to the requirements of this AD. For airplanes that have been modified, altered, or repaired so that the performance of the requirements of this AD is affected, the owner/operator must request approval for an alternative method of compliance in accordance with paragraph (e) of this AD. The request should include an assessment of the effect of the modification, alteration, or repair on the unsafe condition addressed by this AD; and, if the unsafe condition has not been eliminated, the request should include specific proposed actions to address it.

Compliance: Required as indicated, unless accomplished previously.

To prevent the loss of the escape slides during flight, which could make the emergency exits located over each wing unusable and result in damage to the fuselage, accomplish the following:

Inspections and Corrective Actions

(a) At the latest of the times specified in paragraphs (a)(1), (a)(2), and (a)(3) of this AD, as applicable: Perform a detailed visual inspection to detect cracking and delamination of each off-wing escape slide container, including the container door, in accordance with Airbus Service Bulletin A320–25–1161, Revision 01, dated February 2, 1999. Repeat the inspection thereafter at intervals not to exceed 18 months, until accomplishment of the actions required by paragraph (d) of this AD.

(1) Within 500 flight hours after the effective date of this AD.

(2) Within 18 months after the last inspection in accordance with Airbus All Operator Telex 25–09, dated January 2, 1995, or Revision 1, dated February 16, 1995; or Airbus Service Bulletin A320–25–1161, dated June 21, 1995; if accomplished prior to the effective date of this AD.

(3) Within 18 months after modification of the offwing escape slides in accordance with Airbus Service Bulletin A320–25–1156, dated June 21, 1995; if accomplished prior to the effective date of this AD.

Note 2: For the purposes of this AD, a detailed visual inspection is defined as: ''An intensive visual examination of a specific structural area, system, installation, or assembly to detect damage, failure, or irregularity. Available lighting is normally supplemented with a direct source of good lighting at intensity deemed appropriate by the inspector. Inspection aids such as mirror, magnifying lenses, etc., may be used. Surface cleaning and elaborate access procedures may be required.''

(b) If any crack or delamination is found during any inspection required by paragraph (a) of this AD that does not exceed the limits specified in Airbus Service Bulletin A320–25–1161, Revision 01, dated February 2, 1999: Prior to further flight, repair the crack or delamination in accordance with the service bulletin, and continue inspecting in accordance with paragraph (a) of this AD.

(c) If any crack or delamination is found during any inspection required by paragraph (a) of this AD that exceeds the limits specified in Airbus Service Bulletin A320–25–1161, Revision 01, dated February 2, 1999: Prior to further flight, replace the discrepant container with a serviceable container in accordance with the service bulletin, and continue inspecting in accordance with paragraph (a) of this AD.

Terminating Modification

(d) Within 5 years after the effective date of this AD, modify the offwing escape slides (i.e., modifications, inspection, repair, and repacking) in accordance with Airbus Service Bulletin A320–25–1156, Revision 01, dated February 2, 1999. Modification of the escape slides constitutes terminating action for the repetitive inspections required by paragraph (a) of this AD.

Note 3: Airbus Service Bulletin A320–25–1156, Revision 01, dated February 2, 1999, references Air Cruisers Service Bulletins 004–25–37, Revision 2, dated May 29, 1996, and 004–25–42, dated September 16, 1996, as additional sources of service information for accomplishment of the modification of the offwing escape slides.

Alternative Methods of Compliance

(e) An alternative method of compliance or adjustment of the compliance time that provides an acceptable level of safety may be used if approved by the Manager, International Branch, ANM–116, FAA, Transport Airplane Directorate. Operators shall submit their requests through an appropriate FAA Principal Maintenance Inspector, who may add comments and then send it to the Manager, International Branch, ANM–116.

Note 4: Information concerning the existence of approved alternative methods of compliance with this AD, if any, may be obtained from the International Branch, ANM–116.

Special Flight Permits

(f) Special flight permits may be issued in accordance with sections 21.197 and 21.199 of the Federal Aviation Regulations (14 CFR 21.197 and 21.199) to operate the airplane to a location where the requirements of this AD can be accomplished.

Note 5: The subject of this AD is addressed in French airworthiness directive 1999–232–132(B), dated June 2, 1999.

Issued in Renton, Washington, on October 7, 1999.

D.L. Riggin,

Acting Manager, Transport Airplane Directorate, Aircraft Certification Service.

[FR Doc. 99–26871 Filed 10–13–99; 8:45 am]

BILLING CODE 4910–13–U

DEPARTMENT OF TRANSPORTATION

Federal Aviation Administration

14 CFR Part 39

[Docket No. 97–NM–298–AD]

RIN 2120–AA64

Airworthiness Directives; McDonnell Douglas Model DC–9, DC–9–80, and C–9 (Military) Series Airplanes; Model MD–88 Airplanes; and Model MD–90 Airplanes

AGENCY: Federal Aviation Administration, DOT.

ACTION: Notice of proposed rulemaking (NPRM).

SUMMARY: This document proposes the supersedure of an existing airworthiness directive (AD), applicable to certain McDonnell Douglas Model DC–9, DC–9–80, and C–9 (military) series airplanes; Model MD–88 airplanes; and MD–90 airplanes, that currently requires a visual check to determine the part and serial numbers of the upper lock link assembly of the nose landing gear (NLG); repetitive inspections of certain upper lock link assemblies to detect fatigue cracking; and replacement of the upper lock link assembly with an assembly made from aluminum forging material, if necessary. Such replacement would constitute terminating action for the requirements of this AD. The proposed AD would expand the

applicability of the existing AD, reduce the compliance times for the inspections, and add new inspection requirements. This proposal is prompted by a report indicating that an NLG upper lock link fractured prior to landing and jammed against the NLG shock strut, restricting the NLG from fully extending. The actions specified by this proposal are intended to prevent the upper lock link assembly from fracturing due to fatigue cracking, and the NLG consequently failing to extend fully; this condition could result in injury to passengers and flight crew, and damage to the airplane.

DATES: Comments must be received by November 29, 1999.

ADDRESSES: Submit comments in triplicate to the Federal Aviation Administration (FAA), Transport Airplane Directorate, ANM–114, Attention: Rules Docket No. 97–NM–298–AD, 1601 Lind Avenue, SW., Renton, Washington 98055–4056. Comments may be inspected at this location between 9:00 a.m. and 3:00 p.m., Monday through Friday, except Federal holidays.

The service information referenced in the proposed rule may be obtained from Boeing Commercial Aircraft Group, Long Beach Division, 3855 Lakewood Boulevard, Long Beach, California 90846, Attention: Technical Publications Business Administration, Dept. C1–L51 (2–60). This information may be examined at the FAA, Transport Airplane Directorate, 1601 Lind Avenue, SW., Renton, Washington; or at the FAA, Transport Airplane Directorate, Los Angeles Aircraft Certification Office, 3960 Paramount Boulevard, Lakewood, California.

FOR FURTHER INFORMATION CONTACT: Brent Bandley, Aerospace Engineer, Airframe Branch, ANM–120L, FAA, Transport Airplane Directorate, Los Angeles Aircraft Certification Office, 3960 Paramount Boulevard, Lakewood, California 90712–4137; telephone (562) 627–5237; fax (562) 627–5210.

SUPPLEMENTARY INFORMATION:

Comments Invited

Interested persons are invited to participate in the making of the proposed rule by submitting such written data, views, or arguments as they may desire. Communications shall identify the Rules Docket number and be submitted in triplicate to the address specified above. All communications received on or before the closing date for comments, specified above, will be considered before taking action on the proposed rule. The proposals contained in this notice may be changed in light of the comments received.

Comments are specifically invited on the overall regulatory, economic, environmental, and energy aspects of the proposed rule. All comments submitted will be available, both before and after the closing date for comments, in the Rules Docket for examination by interested persons. A report summarizing each FAA-public contact concerned with the substance of this proposal will be filed in the Rules Docket.

Commenters wishing the FAA to acknowledge receipt of their comments submitted in response to this notice must submit a self-addressed, stamped postcard on which the following statement is made: ''Comments to Docket Number 97–NM–298–AD.'' The postcard will be date stamped and returned to the commenter.

Availability of NPRMs

Any person may obtain a copy of this NPRM by submitting a request to the FAA, Transport Airplane Directorate, ANM–114, Attention: Rules Docket No. 97–NM–298–AD, 1601 Lind Avenue, SW., Renton, Washington 98055–4056.

Discussion

On January 14, 1997, the FAA issued AD 97–02–10, amendment 39–9895 (62 FR 3781, January 27, 1997), applicable to certain McDonnell Douglas Model DC–9, DC–9–80, and C–9 (military) series airplanes; Model MD–88 airplanes; and MD–90 airplanes. That AD requires a visual check to determine the part and serial numbers of the upper lock link assembly of the nose landing gear (NLG); repetitive inspections of certain upper lock link assemblies to detect fatigue cracking; and replacement of the upper lock link assembly with an assembly made from aluminum forging material, if necessary. That action was prompted by a report indicating that, due to fatigue cracking, the upper lock link assembly on an airplane fractured, and consequently prevented the NLG from extending fully. The requirements of that AD are intended to prevent this assembly from fracturing due to fatigue cracking, and the NLG consequently failing to extend fully; this condition could result in injury to passengers and flight crew, and damage to the airplane.

Actions Since Issuance of Previous Rule

Since the issuance of AD 97–02–10, the FAA has received one report of an incident involving a McDonnell Douglas Model DC–9–82 (MD–82) series airplane in which the upper lock link failed and the NLG collapsed on landing. In addition, the FAA has received reports of three lock link failures and four cracked lock links.

In the preamble to AD 97–02–10, the FAA specified that the actions required by that AD were considered ''interim action'' and that the manufacturer was developing a modification to positively address the unsafe condition. The FAA indicated that it may consider further rulemaking action once the modification was developed, approved, and available. The manufacturer now has developed a method that can be used by the operators to identify the type of material used for the upper lock link (overcenter link) of the NLG, and the FAA has determined that further rulemaking action is indeed necessary. This proposed AD follows from that determination.

Additional Relevant Service Information

The FAA has reviewed and approved the following McDonnell Douglas Service Bulletins, both dated March 11, 1999:

- MD90–32–033 (for Model MD–90 airplanes).
- DC9–32–315 [for Model DC–9, DC–9–80, and C–9 (military) series airplanes; and Model MD–88 airplanes].

Those service bulletins specify procedures for removing and retaining certain upper lock links and attaching parts for the NLG, and a visual inspection of the NLG upper lock link assembly to determine whether the assembly is from the affected lot specified in the applicable service bulletin. Procedures also include the following on-condition actions:

- If the link is from the affected lot, replace the link with either a new upper lock link or a lock link assembly made from aluminum forging material.
- If the upper lock link is not from the affected lot, etch inspect to determine the type of material used for the lock link (Condition 2 or 3). If an NLG upper lock link is made from aluminum forging material (Condition 2), reidentify the lock link by adding an ''F'' to the P/N. If an NLG upper lock link is made from plate or bar material (Condition 3), accomplish either of two options. Option 1 specifies permanently removing any discrepant lock link and replacing it with a new upper lock link or a lock link assembly made from aluminum forging. Option 2 specifies restoring the link finish; reidentifying the lock link by adding a paint stripe next to the part number, which indicates the part is not made from aluminum forging material; and eventually replacing the upper lock link assembly with a link made from aluminum forging material.

The FAA also has reviewed and approved the following McDonnell Douglas Alert Service Bulletins, both dated October 29, 1997.

- MD90–32A019, Revision 02 (for Model MD–90 airplanes).
- DC9–32A298, Revision 02 [for Model DC–9, DC–9–80, and C–9 (military) series airplanes; and Model MD–88 airplanes].

Those alert service bulletins are essentially the same as the earlier versions of the service bulletins, which include procedures for a high frequency eddy current inspection and Type I fluorescent penetrant inspection of the upper lock link to detect cracking of the lock link. However, Revision 02 adds airplanes to the effectivity and reduces the compliance times for the inspections.

Accomplishment of the actions specified in the applicable service bulletin referenced above is intended to adequately address the identified unsafe condition.

Explanation of Requirements of Proposed Rule

Since an unsafe condition has been identified that is likely to exist or develop on other products of this same type design, the proposed AD would supersede AD 97–02–10 to continue to require an inspection to determine the part and serial numbers of the upper lock link assembly of the NLG. This proposed AD would expand the applicability of the existing AD, reduce the compliance times for the inspections, and add new inspection requirements. The proposed AD also requires replacement of the NLG upper lock link, if necessary. Such replacement would constitute terminating action for the requirements of this AD.

The actions would be required to be accomplished in accordance with the previously referenced service information.

Explanation of Proposed Compliance Times

Based on further investigation, the FAA finds that the current inspection thresholds and intervals for the repetitive inspections specified by AD 97–02–10 are inadequate to detect cracking in a timely manner. Consequently, it is necessary to lower the threshold for the one-time inspections of the upper lock link assembly of the NLG, and to require replacement actions in lieu of repetitive inspections.

The FAA has determined the compliance times for the one-time inspections for the proposed rule based on calculations of the fatigue life of the lock link made from plate or bar material and crack growth analysis, and has taken into account the detectability of the non-destructive inspection methods used. The shorter compliance times were determined because of findings of higher stress levels in the NLG upper lock link than previously indicated due to increased crack growth rate beyond the initial inspection threshold.

AD 97–02–10 requires that the initial inspection of the upper lock link assembly of the NLG be accomplished ''prior to the accumulation of 10,000 total cycles of the NLG, or within 90 days after the effective date of this AD, whichever occurs later.'' However, paragraphs (a) and (b) of this proposed rule would require a one-time detailed visual inspection of the NLG upper lock link assembly to be accomplished ''within 2,500 landings on the NLG after the effective date of this AD, or 5,000 landings since the last inspection accomplished in accordance with paragraph (a) of AD 97–02–10, whichever occurs first.''

Clarification of Requirements

The FAA has determined that it is necessary to clarify certain terminology used in AD 97–02–10. In light of this, the term ''visual check'' has been changed to ''detailed visual inspection'' in this AD. The FAA considers that this type of inspection is necessary to ensure the continued operational safety of the fleet.

Differences Between Proposed Rule and Service Information

Operators should note that, although the previously referenced service bulletins specify repetitive inspections of the upper lock link for cracks, this proposed AD does not require repetitive inspections.

The FAA has determined that long term continued operational safety will be better assured by modifications or design changes to remove the source of the problem, rather than by repetitive inspections. Long term inspections may not be providing the degree of safety assurance necessary for the transport airplane fleet. This, coupled with a better understanding of the human factors associated with numerous repetitive inspections, has led the FAA to consider placing less emphasis on special procedures and more emphasis on design improvements. The proposed replacement requirement is in consonance with these considerations.

Operators also should note that Boeing Alert Service Bulletins MD90–32A019 and DC9–32A298, both Revision 02, specify procedures for ''exempt and non-exempt'' lock link assemblies. However, in this proposed AD there are no lock link assemblies specified as ''exempt or non-exempt.'' Instead, a one-time detailed visual inspection is required to determine whether the upper lock link assembly is from an ''affected lot,'' as specified in Boeing Service Bulletin MD90–32–033 or DC9–32–315.

Cost Impact

There are approximately 2,100 airplanes of the affected design in the worldwide fleet. The FAA estimates that 1,400 airplanes of U.S. registry would be affected by this proposed AD.

It would take approximately 1 work hour per airplane to accomplish the proposed detailed visual and etch inspections of the NLG upper lock link, at an average labor rate of $60 per work hour. Based on these figures, the cost impact of the proposed AD on U.S. operators is estimated to be $84,000, or $60 per airplane.

It would take approximately 2 work hours per airplane to accomplish each proposed replacement of the NLG upper lock link, at an average labor rate of $60 per work hour. Required parts would cost approximately $5,803 per airplane. Based on these figures, the cost impact of the proposed AD on U.S. operators is estimated to be $8,292,200, or $5,923 per airplane.

The cost impact figures discussed above are based on assumptions that no operator has yet accomplished any of the current or proposed requirements of this AD action, and that no operator would accomplish those actions in the future if this AD were not adopted.

Regulatory Impact

The regulations proposed herein would not have substantial direct effects on the States, on the relationship between the national government and the States, or on the distribution of power and responsibilities among the various levels of government. Therefore, in accordance with Executive Order 12612, it is determined that this proposal would not have sufficient federalism implications to warrant the preparation of a Federalism Assessment.

For the reasons discussed above, I certify that this proposed regulation (1) is not a ''significant regulatory action'' under Executive Order 12866; (2) is not a ''significant rule'' under the DOT Regulatory Policies and Procedures (44 FR 11034, February 26, 1979); and (3) if promulgated, will not have a significant economic impact, positive or negative, on a substantial number of small entities under the criteria of the Regulatory

Flexibility Act. A copy of the draft regulatory evaluation prepared for this action is contained in the Rules Docket. A copy of it may be obtained by contacting the Rules Docket at the location provided under the caption **ADDRESSES**.

List of Subjects in 14 CFR Part 39

Air transportation, Aircraft, Aviation safety, Safety.

The Proposed Amendment

Accordingly, pursuant to the authority delegated to me by the Administrator, the Federal Aviation Administration proposes to amend part 39 of the Federal Aviation Regulations (14 CFR part 39) as follows:

PART 39—AIRWORTHINESS DIRECTIVES

1. The authority citation for part 39 continues to read as follows:

Authority: 49 U.S.C. 106(g), 40113, 44701.

§ 39.13 [Amended]

2. Section 39.13 is amended by removing amendment 39–9895 (62 FR 3781, January 27, 1997), and by adding a new airworthiness directive (AD), to read as follows:

McDonnell Douglas: Docket 97–NM–298–AD. Supersedes AD 97–02–10, Amendment 39–9895.

Applicability: Model DC–9, DC–9–80, and C–9 (military) series airplanes; Model MD–88 airplanes; and Model MD–90 airplanes; as listed in McDonnell Douglas Alert Service Bulletins DC9–32A298, and MD90–32A019, both Revision 02, dated October 29, 1997; certificated in any category:

Note 1: This AD applies to each airplane identified in the preceding applicability provision, regardless of whether it has been modified, altered, or repaired in the area subject to the requirements of this AD. For airplanes that have been modified, altered, or repaired so that the performance of the requirements of this AD is affected, the owner/operator must request approval for an alternative method of compliance in accordance with paragraph (d)(1) of this AD. The request should include an assessment of the effect of the modification, alteration, or repair on the unsafe condition addressed by this AD; and, if the unsafe condition has not been eliminated, the request should include specific proposed actions to address it.

Compliance: Required as indicated, unless accomplished previously. To prevent the upper lock link assembly of the nose landing gear (NLG) from fracturing due to fatigue cracking, and the NLG consequently failing to extend fully, which could result in injury to passengers and flight crew, and damage to the airplane, accomplish the following:

Removing and Retaining Upper Lock Link

(a) Within 2,500 landings on the NLG after the effective date of this AD, or 5,000 landings since the last inspection accomplished in accordance with paragraph (a) of AD 97–02–10, whichever occurs first, remove and retain the upper lock link, part number (P/N) 3914464, and attaching parts; and accomplish the inspections required by paragraphs (b) and (c) of this AD, in accordance with McDonnell Douglas Service Bulletin DC9–32–315 [for Model DC–9, DC–9–80, and C–9 (military) series airplanes; and Model MD–88 airplanes], or McDonnell Douglas Service Bulletin MD90–32–033 (for Model MD–90 airplanes), both dated March 11, 1999; as applicable.

Detailed Visual Inspection

(b) Perform a one-time detailed visual inspection of the NLG upper lock link assembly to determine whether the serial number of the lock link is identified in the affected lot specified in Condition 1 of the Accomplishment Instructions of the applicable service bulletin, in accordance with McDonnell Douglas Service Bulletin DC9–32–315 [for Model DC–9, DC–9–80, and C–9 (military) series airplanes; and Model MD–88 airplanes], or McDonnell Douglas Service Bulletin MD90–32–033 (for Model MD–90 airplanes), both dated March 11, 1999; as applicable.

Identifying Upper Lock Links From Affected Lot and Corrective Actions:

Condition 1 (Hand Forging Serial Number)

(1) If the serial number of the upper lock link is not from the affected lot specified in the applicable service bulletin (Condition 1), prior to further flight, accomplish the etch inspection required by paragraph (c) of this AD, in accordance with the applicable service bulletin.

(2) If the serial number of the upper lock link is from the affected lot specified in the applicable service bulletin (Condition 1), prior to further flight, replace the lock link with a new upper lock link, P/N 3914464–507; a reidentified upper lock link, P/N 3914464; or a new upper lock link assembly, P/N 5965065–507; all made from aluminum forging material; in accordance with the applicable service bulletin. Accomplishment of the replacement action constitutes terminating action for the requirements of this AD.

Note 2: For the purposes of this AD, a detailed visual inspection is defined as: ''An intensive visual examination of a specific structural area, system, installation, or assembly to detect damage, failure, or irregularity. Available lighting is normally supplemented with a direct source of good lighting at an intensity deemed appropriate by the inspector. Inspection aids such as mirrors, magnifying lenses, etc. may be used. Surface cleaning and elaborate access procedures may be required.''

Etch Inspection

(c) Perform a one-time etch inspection of the NLG upper lock link to determine whether the lock link is made from aluminum forging material (Condition 2), or from plate or bar material (Condition 3), in accordance with McDonnell Douglas Service Bulletin DC9–32–315 [for Model DC–9, DC–9–80, and C–9 (military) series airplanes; and Model MD–88 airplanes], or McDonnell Douglas Service Bulletin MD90–32–033 (for Model MD–90 airplanes), both dated March 11, 1999; as applicable.

Corrective Actions

Condition 2 (Aluminum Forging Material)

(1) If the upper lock link is made from aluminum forging material, prior to further flight, restore the finish and reidentify the lock link, P/N 3914464, by adding an ''F'' to the part number, using an electro etch method, in accordance with the applicable service bulletin. Following accomplishment of the identification of the lock link as being made from aluminum forging material, no further action is required by this AD.

Condition 3 (Plate or Bar Material)

(2) If the NLG upper lock link is made from plate or bar material, prior to further flight, accomplish either Option 1, as specified by paragraph (c)(2)(i) of this AD, or Option 2, as specified by paragraphs (c)(2)(ii) and (c)(2)(iii) of this AD.

Option 1

(i) Permanently remove any discrepant upper lock link and replace with a new upper lock link, P/N 3914464–507; a reidentified upper lock link, P/N 3914464; or a new upper lock link assembly, P/N 5965065–507; all made from aluminum forging material; in accordance with the applicable service bulletin. Accomplishment of the replacement action constitutes terminating action for the requirements of this AD.

Option 2

(ii) Restore the link finish and reidentify the upper lock link by adding a paint stripe adjacent to the part number, indicating that the part is not made from aluminum forging material; in accordance with the applicable service bulletin.

(iii) Perform a high frequency eddy current inspection (HFEC) and Type I fluorescent penetrant inspection of the upper lock link assembly, P/N 3914464–(any configuration), to detect cracking of the assembly, in accordance with McDonnell Douglas Alert Service Bulletin DC9–32A298, Revision 02 [for Model DC–9, DC–9–80, and C–9 (military) series airplanes; and Model MD–88 airplanes], or Alert Service Bulletin MD90–32A019, Revision 02 (for Model MD–90 airplanes), both dated October 29, 1997; as applicable.

Note 3: Accomplishment of the inspections of the upper lock link assembly of the NLG, as specified by paragraph (c)(2)(iii) of this AD, prior to the effective date of this AD, in accordance with McDonnell Douglas Alert Service Bulletins DC9–32A298, dated December 19, 1996, or Revision 01, dated June 16, 1997; or MD90–32A019, dated December 19, 1996, or Revision 01, dated June 16, 1997; as applicable; is considered acceptable for compliance with the inspection requirements of paragraph (c)(2)(iii) of this AD.

Replacement

(A) If no crack is detected during the inspections required by paragraph (c)(2)(iii)

of this AD, within 2,500 landings on the NLG since accomplishment of the inspection performed in accordance with paragraph (c)(2)(iii) of this AD, replace the upper lock link with a new upper lock link, P/N 3914464–507; a reidentified upper lock link, P/N 3914464; or a new upper lock link assembly, P/N 5965065–507; all made from aluminum forging material; in accordance with McDonnell Douglas Service Bulletin DC9–32–315 [for Model DC–9, DC–9–80, and C–9 (military) series airplanes; and Model MD–88 airplanes], or McDonnell Douglas Service Bulletin MD90–32–033 (for Model MD–90 airplanes), both dated March 11, 1999; as applicable. Accomplishment of the replacement action constitutes terminating action for the requirements of this AD.

(B) If any crack is detected during the inspections required by paragraph (c)(2)(iii) of this AD, prior to further flight, replace the discrepant NLG upper lock link with a new upper lock link, P/N 3914464–507; a reidentified upper lock link, P/N 3914464; or a new upper lock link assembly, P/N 5965065–507; all made from aluminum forging material; in accordance with the applicable service bulletin. Accomplishment of the replacement action constitutes terminating action for the requirements of this AD.

Alternative Methods of Compliance

(d)(1) An alternative method of compliance or adjustment of the compliance time that provides an acceptable level of safety may be used if approved by the Manager, Los Angeles Aircraft Certification Office (ACO), FAA, Transport Airplane Directorate. Operators shall submit their requests through an appropriate FAA Principal Maintenance Inspector, who may add comments and then send it to the Manager, Los Angeles ACO.

(d)(2) Alternative methods of compliance, approved previously in accordance with AD 97–02–10, amendment 39–9895, are approved as alternative methods of compliance with paragraph (d)(1) of this AD.

Note 4: Information concerning the existence of approved alternative methods of compliance with this AD, if any, may be obtained from the Los Angeles ACO.

Special Flight Permits

(e) Special flight permits may be issued in accordance with sections 21.197 and 21.199 of the Federal Aviation Regulations (14 CFR 21.197 and 21.199) to operate the airplane to a location where the requirements of this AD can be accomplished.

Issued in Renton, Washington, on October 7, 1999.

D. L. Riggin,

Acting Manager, Transport Airplane Directorate, Aircraft Certification Service.

[FR Doc. 99–26872 Filed 10–13–99; 8:45 am]

BILLING CODE 4910–13–U

SECURITIES AND EXCHANGE COMMISSION

17 CFR Parts 210, 228, 229, and 240

[Release No. 34–41987; File No. S7–22–99]

RIN 3235–AH83

Audit Committee Disclosure

AGENCY: Securities and Exchange Commission.

ACTION: Proposed rule.

SUMMARY: The Securities and Exchange Commission is proposing new rules and amendments to its current rules to improve disclosure related to the functioning of corporate audit committees and to enhance the reliability and credibility of financial statements of public companies.

DATES: Public comments are due on or before November 29, 1999.

ADDRESSES: Please send three copies of your comment letter to Jonathan G. Katz, Secretary, U.S. Securities and Exchange Commission, 450 Fifth Street, NW., Washington, DC 20549–0609. Comment letters can be sent electronically to the following e-mail address: rule-comments@sec.gov. Your comment letter should refer to File No. S7–22–99; if e-mail is used, please include the file number in the subject line. Anyone can inspect and copy the comment letters in the Commission's Public Reference Room, 450 Fifth Street, NW., Washington, DC 20549. Electronically submitted comment letters will be posted on the Commission's internet web site (http://www.sec.gov).

FOR FURTHER INFORMATION CONTACT: Mark Borges, Attorney-Adviser, Division of Corporation Finance (202–942–2900), Meridith Mitchell, Senior Counselor, Office of the General Counsel (202–942–0900), or W. Scott Bayless, Associate Chief Accountant, or Robert E. Burns, Chief Counsel, Office of the Chief Accountant (202–942–4400).

SUPPLEMENTARY INFORMATION: The Commission is proposing amendments to Rule 10–01 of Regulation S–X,[1] Rule 310 of Regulation S–B,[2] and Item 7 of Schedule 14A[3] under the Securities Exchange Act of 1934 (the ''Exchange Act'').[4] Additionally, the Commission is proposing new Item 306 of Regulation S–K[5] and Item 306 of Regulation S–B.[6]

[1] 17 CFR 210.10–01.

[2] 17 CFR 228.310.

[3] 17 CFR 240.14a–101.

[4] 15 U.S.C. 78a *et seq.*

[5] 17 CFR 229.306.

[6] 17 CFR 228.306.

I. Executive Summary

We are proposing new rules and amendments to current rules to improve disclosure relating to the functioning of corporate audit committees and to enhance the reliability and credibility of financial statements of public companies. The proposals are based in large measure on recommendations recently made by the Blue Ribbon Committee on Improving the Effectiveness of Corporate Audit Committees (the ''Blue Ribbon Committee'').[7]

The Blue Ribbon Committee's work was designed to promote quality financial reporting. Underpinning the Blue Ribbon Committee's work ''is the recognition that quality financial accounting and reporting can only result from effective interrelationships among'' corporate boards, audit committees, senior and financial management, the internal auditor and the outside auditors.[8] Among these corporate participants, the Blue Ribbon Committee's focus was on improving the effectiveness of corporate audit committees. As the Blue Ribbon Committee said, the audit committee is ''first among equals'' in the financial reporting process[9] because it is an extension of the full board, which is the ultimate monitor of the process.

Audit committees play a critical role in the financial reporting system by overseeing and monitoring management's and the independent auditors' participation in the financial reporting process. An audit committee can facilitate communications between a company's board of directors, its management, and its internal and independent auditors. A properly functioning audit committee helps to enhance the reliability and credibility of financial disclosures.

We have seen a number of significant changes in our markets, such as technological developments and increasing pressure on companies to meet earnings expectations,[10] that make it ever more important for the financial reporting process to remain disciplined

[7] *See* Report and Recommendations of the Blue Ribbon Committee on Improving the Effectiveness of Corporate Audit Committees (1999) (the ''Blue Ribbon Report''). The Blue Ribbon Report is available on the internet at http://www.nasd.com and http://www.nyse.com.

[8] Letter from the Chairmen of the Blue Ribbon Committee to Messrs. Grasso and Zarb, Blue Ribbon Report, at 3.

[9] Blue Ribbon Report, *supra* note 7, at 7.

[10] *See, e.g.,* Jack Ciesielski, Editorial, *More Second-Guessing: Markets Need Better Disclosure of Earnings Management,* Barrons, Aug. 24, 1998, at 47.

and credible.[11] We believe that additional disclosures about a company's audit committee and its interaction with the company's auditors and management will promote investor confidence in the integrity of the financial reporting process. In addition, increasing the level of scrutiny by independent auditors of companies' quarterly financial statements should lead to fewer year-end adjustments, and, therefore, more reliable financial information about companies throughout the reporting year.

Accordingly, today's proposals would:

- require that companies' independent auditors review the financial information included in the companies' Quarterly Reports on Form 10–Q or 10–QSB prior to the companies filing such forms with the Commission (see Section III.A below);
- require that companies include reports of their audit committees in their proxy statements; in the report, the audit committee must state whether the audit committee has: (i) Reviewed and discussed the audited financial statements with management; (ii) discussed with the independent auditors the matters required to be discussed by Statement on Auditing Standards No. 61,[12] as may be modified or supplemented;[13] and (iii) received certain disclosures from the auditors regarding the auditors' independence as required by the Independence Standards Board Standard No. 1, as may be modified or supplemented,[14] and discussed with the auditors the auditors' independence (see Section III.B below);
- require that the report of the audit committee also include a statement by the audit committee whether, based on such review and discussions, anything has come to the attention of the members of the audit committee that caused the audit committee to believe that the audited financial statements included in the company's Annual Report on Form 10–K or 10–KSB, as applicable, for the year then ended contain an untrue statement of material fact or omit to state a material fact necessary to make the statements made, in light of the circumstances under which they were made, not misleading (see Section III.B below);
- require that companies disclose in their proxy statements whether their audit committee has adopted a written charter and, if the audit committee has adopted a charter, to include a copy of the charter as an appendix to the company's proxy or information statement at least once every three years (see Section III.C below);
- require that companies whose securities are quoted on Nasdaq or listed on the American Stock Exchange (''AMEX'') or New York Stock Exchange (''NYSE'') disclose in their proxy statements certain information regarding any director on the audit committee who is not ''independent,'' as defined in the applicable listing standard; small business issuers would not be required to comply with this requirement (see Section III.D below);[15]
- require that all other companies, including small business issuers, disclose in their proxy statements whether, if they have an audit committee, the members are ''independent'' within the definition of the National Association of Securities Dealer's (''NASD''), AMEX's or NYSE's proposed amendments to their listing standards[16] and which definition of independence was used (see Section III.D below); and
- create ''safe harbors'' for the information required to be disclosed under the proposals to protect companies and their directors from certain liabilities under the federal securities laws (see Section III.E below).

II. Background

Accurate and reliable financial reporting lies at the heart of our disclosure-based system for securities regulation, and is critical to the integrity of the U.S. securities markets. Investors need accurate and reliable financial information to make informed investment decisions. As an increasing number of investors enter our markets, it is important for us to continue our efforts to promote the highest quality financial reporting. Investor confidence in the reliability of corporate financial information is fundamental to maintaining the liquidity and vibrancy of our markets.

Over the past few years, we have seen dramatic changes in the way investors receive information and the speed with which information can be and is disseminated to the market. Market demand for information appears to be at an all time high as technology makes information available to more people more quickly. These developments have presented companies with an increasingly complex set of challenges. One such challenge is that companies are under increasing pressure to meet earnings expectations.[17]

Unfortunately, we have begun to see cases in which companies have engaged in inappropriate ''earnings management,''[18] the practice of distorting the true financial performance of the company. Distortions may result from inappropriate earnings management and may undermine the integrity of financial reporting. As Chairman Levitt has stated, when inappropriate earnings management occurs, ''[i]ntegrity may be losing out to illusion.''[19]

As a result of the changes in our markets and the increasing demands on companies, our continuing efforts to maintain the integrity of financial reporting have gained a sense of urgency. Market changes have highlighted the importance of strong and effective audit committees. Effective oversight of the financial reporting process is fundamental to preserving the integrity of our markets. Audit committees can, and should, be the corporate participant best able to perform that oversight function.

Audit committees oversee and monitor management and the independent auditors in the financial reporting process, and thereby play a critical role in assuring the credibility of financial reporting. Audit committees can facilitate communications between a company's board of directors, its management, and its internal and independent auditors on significant accounting issues and policies. They can provide a forum separate from management in which auditors can candidly discuss any concerns. By effectively carrying out their many functions and responsibilities, audit committees help to enhance the reliability and credibility of financial reports.

Since the early 1940s,[20] the Commission, along with the auditing

[11] The Commission recently filed 30 enforcement actions against 68 individuals and companies for fraud and related misconduct in the accounting, reporting, and disclosure of financial results by 15 different public companies. *See* SEC Press Release 99–124 (Sept. 28, 1999).

[12] *See* Codification of Statements on Auditing Standards, AU § 380 (''SAS 61'').

[13] *See* Exposure Draft for Proposed Statement on Auditing Standards: Amendments to Statements on Auditing Standard No. 61, Communication with Audit Committees and Statements on Auditing Standard No. 71, Interim Financial Information (Oct. 1, 1999) (''ASB Exposure Draft''). A copy of the ASB Exposure Draft can be obtained at www.aicpa.org/members/div/auditstd/drafts.htm.

[14] Independence Standards Board Standard No. 1, *Independence Discussions with Audit Committees* (''ISB Standard No. 1''). A copy of ISB Standard No. 1 can be obtained at www.cpaindependence.org.

[15] ''Small business issuer'' is defined in Item 10(a)(1) of Regulation S–B, 17 CFR 228.10(a)(1), as a company with less than $25 million in revenues and market capitalization.

[16] The listing standards of the NASD, AMEX and NYSE are available on their websites at: http://www.nasd.com, http://www.amex.com, and http://www.nyse.com, respectively. *See infra* note 27 regarding proposed changes to their listing standards.

[17] *See*, e.g., Carol J. Loomis *et al.*, *Lies, Damned Lies, and Managed Earnings*, Fortune, Aug. 2, 1999, at 74; Thor Valdmanis, *Accounting Abracadabra*, USA Today, Aug. 11, 1998, at 1B; Bernard Condon, *Pick a Number, Any Number*, Forbes, Mar. 23, 1998, at 124; Justin Fox & Rajiv Rao, *Learn to Play the Earnings Game*, Fortune, Mar. 31, 1997, at 76.

[18] *See, e.g., In the Matter of Livent, Inc.*, Exchange Act Release No. 40937 (Jan. 13, 1999) [68 SEC Docket 2881]; *see also SEC* v. *W.R. Grace & Co.*, Litigation Release No. 16008 (Dec. 22, 1998) [68 SEC Docket 2580].

[19] Arthur Levitt, Chairman, SEC, Address to the NYU Center for Law and Business (Sept. 28, 1998).

[20] In 1940, the Commission investigated the auditing practices of McKesson & Robbins, Inc., and the Commission's ensuing report prompted action on auditing procedures by the auditing community. *In the Matter of McKesson & Robbins*, Accounting

Continued

and corporate communities, has had a continuing interest in promoting effective and independent audit committees. It was, in large measure, with the Commission's encouragement, for instance, that the self-regulatory organizations first adopted audit committee requirements in the 1970s. In 1974 and 1978, the Commission adopted rules requiring certain disclosures about audit committees.[21] In 1980, the Commission issued a staff report on corporate accountability that addresses some of the issues underlying today's proposals.[22] Former SEC Commissioner James Treadway led the National Commission on Fraudulent Financial Reporting that issued recommendations on corporate audit committees in 1987.[23]

Most recently, the NYSE and NASD sponsored the Blue Ribbon Committee in response to ''an increasing sense of urgency surrounding the need for responsible financial reporting given the market's increasing focus on corporate earnings and a long and powerful bull market.'' [24] Representatives from corporations, the accounting profession, and the self-regulatory organizations, among others, were members of the Blue Ribbon Committee. In February 1999, the Blue Ribbon Committee issued ten recommendations. Several of the recommendations call for action by the Commission, and the proposals in this release are based in large measure on those recommendations.

The proposals in this release affirm what have long been considered sound practice and good policy within the accounting and corporate communities.[25] While recognizing that the audit committee's role is ''clearly one of oversight and monitoring,'' the Blue Ribbon Committee explains its recommendations as helping to ensure that:

> [a] proper and well-functioning system exists * * * [whereby] the three main groups responsible for financial reporting—the full board including the audit committee, financial management including the internal auditors, and the outside auditors—form a ''three-legged stool'' that supports responsible financial disclosure and active and participatory oversight.[26]

We recognize that how audit committees function may vary from company to company, and companies need flexibility to determine all of the specific duties and functions of their audit committees. In that regard, our proposals do not tell audit committees what specific duties they must carry out or how to function. In addition, we are not regulating the substance of the discussions between the audit committee and management or the independent auditors, and, in fact, we are not requiring disclosure of the substance of the discussions.

We recognize that many in the corporate community are concerned that increased disclosure about audit committees may expose audit committee members to additional liability, may make it more difficult for companies to find good people willing to serve on audit committees, and may impose added costs on companies. To address those concerns, some of our proposals differ from the Blue Ribbon Committee's recommendations. The differences are noted below in the specific discussions of each proposal. In addition, proposed safe harbors that address the liability concerns are discussed below in Section III.E.

The Blue Ribbon Committee also made recommendations that call for action by the NASD, the NYSE, or the AICPA. In response, the NASD and NYSE filed with the Commission proposed rule changes to their listing standards.[27] The significant amendments proposed by the NASD, NYSE, and AMEX are:

- a more demanding definition of ''independence'' for audit committee members;
- a requirement that audit committees include at least three members, comprised solely of ''independent'' directors who are financially literate,[28] with limited exceptions (under the NASD's and AMEX's proposed amendments to their listing standards, small business issuers must establish and maintain an audit committee composed of at least two members; a majority of the members must be independent directors);
- a requirement that at least one member of the audit committee has accounting or related financial management expertise; and
- a requirement that companies adopt a written audit committee charter that outlines certain specified responsibilities of the audit committee.

Other recommendations are directed at the AICPA. The Blue Ribbon Committee recommends that generally accepted auditing standards be amended to require that a company's independent auditors discuss with the audit committee the auditors' judgments about the quality, and not just the acceptability under generally accepted accounting principles (''GAAP''), of the company's accounting principles as applied in the company's financial statements. Similarly, the Blue Ribbon Committee recommends that Statement on Auditing Standards (''SAS'') No. 71[29] be modified to require that the independent auditors discuss with the audit committee, or at least its chairman, and a representative of financial management, the matters

---

Series Release (''ASR'') No. 19, Exchange Act Release No. 2707 (Dec. 5, 1940).

[21] ASR No. 165 (Dec. 20, 1974) [40 FR 1010] (requiring disclosure of the existence and composition of the audit committee); Exchange Act Release No. 15384 (Dec. 6, 1978) [43 FR 58522] (requiring disclosure of the functions performed and number of meetings held by the audit committee).

[22] *See* Staff of the SEC, Division of Corporation Finance, Report on Corporate Accountability, A Re-examination of Rules Relating to Shareholder Communications, Shareholder Participation in the Corporate Electoral Process and Corporate Governance Generally, 486–510 (Sept. 4, 1980).

[23] *See* Report of the National Commission on Fraudulent Financial Reporting (Oct. 1987) (the ''Treadway Report'').

[24] Blue Ribbon Report, *supra* note 7, at 17.

[25] *See* Advisory Panel on Auditor Independence (''Kirk Panel''), *Strengthening the Professionalism of the Independent Auditor*, Report by the Oversight Board of the SEC Practice Section, American Institute of Certified Public Accountants (''AICPA'') (Sept. 13, 1994) (the ''Kirk Panel Report''); *see also* the Treadway Report, *supra* note 23.

[26] Blue Ribbon Report, *supra* note 7, at 7. As noted, the Blue Ribbon Committee indicated that the audit committee, management, and the independent auditors form a ''three-legged stool'' that supports responsible financial disclosure and active and participatory oversight. If we adopt the proposed requirement for an audit committee report, shareholders annually will receive reports from two of the groups—the audit committee and the independent auditors—that describe their roles in the financial reporting process. Some have recommended that the SEC require a report signed by the chief executive officer or others that acknowledges management's responsibilities for the financial statements and internal controls. *See* Treadway Report, *supra* note 23, at 44. To date, the Commission has encouraged the use of management reports, but not required them. The Commission staff is considering whether requiring management reports, so that investors will have a report from each of the three main groups responsible for financial reporting, would be useful to investors and serve the public interest. If we decide to pursue mandatory management reports, a separate proposing release will be published for public comment.

[27] *See* Proposed Rule Change, NASD, File No. SR–NASD–99–48; Proposed Rule Change, NYSE, File No. SR–NYSE–99–39. While the Blue Ribbon Committee's recommendations were directed to the NYSE and the NASD, the AMEX has filed proposed rule changes to its listing standards in accordance with the recommendations. *See* Proposed Rule Change, AMEX, File No. SR–AMEX–99–38. The AMEX's proposed changes parallel the changes proposed by the NASD. It is possible that in the future other exchanges will propose to amend their listing standards in accordance with the Blue Ribbon Committee's recommendations. At such time, the Commission will evaluate whether the proposals in this release, if adopted, should be modified with respect to new listing standards.

[28] Under proposed amendments to Section 303.01(B)(2)(b) of the NYSE's listing standards, the board of directors would determine what ''financially literate'' means. Under proposed amendments to Rule 4310(c)(26)(B)(i) of the NASD's listing standards and Section 121B(b)(i) of the AMEX's listing standards, the audit committee members must be able to read and understand fundamental financial statements, including a company's balance sheet, income statement, and cash flow statement.

[29] *See* Codification of Statements on Auditing Standards, AU § 722 (''SAS 71''). SAS 71 provides guidance to independent accountants on performing reviews of interim financial information.

described in SAS 61[30] prior to the company filing its Quarterly Report on Form 10–Q or 10–QSB (and preferably prior to any public announcement of financial results), including significant adjustments and accounting estimates, significant new accounting policies and disagreements with management.

III. The Proposals

A. Pre-Filing Review of Quarterly Financial Statements

Under current Commission rules, a company's interim financial statements contained in its Quarterly Reports on Form 10–Q or 10–QSB need not be reviewed or audited by independent auditors prior to the company filing such forms with the Commission.[31] We propose to amend Rule 10–01(d) of Regulation S–X and Item 310(b) of Regulation S–B to require that a company's interim financial statements be reviewed by an independent public accountant prior to the company filing its Form 10–Q or 10–QSB with the Commission. The amendments would require that independent auditors follow ''professional standards and procedures for conducting such reviews, as established by generally accepted auditing standards, as may be modified or supplemented by the Commission.'' Under current auditing standards, this means that the auditors would be required to follow the procedures set forth in SAS 71, or such other auditing standards that may in time modify, supplement, or replace SAS 71. Consistent with current rules, we are not proposing to require that interim financial statements be audited.[32]

Under current Commission rules, if a company discloses in its filings with the Commission that an independent auditor has performed a review of interim financial statements, it must file a copy of the auditor's report.[33] We are not proposing to modify that requirement.[34] Investors and other users of financial statements rely on, and react quickly to, quarterly results. Quarterly financial reporting, however, has never been subject to the same discipline that is applied to annual financial reporting. Interim financial results are not required to be audited or reviewed by an independent auditor. It is commonplace, however, for financial analysts to set quarterly earnings expectations for companies that they follow.[35] The consequence of a company failing to meet or exceed these expectations may, in some cases, result in a precipitous decline in its stock price. As a result, companies may be experiencing increasing pressure to ''manage'' interim financial results. Accordingly, inappropriate earnings management could be deterred by imposing more discipline on the process of preparing interim financial information before filing such information with the Commission.[36]

The reviews required by our proposal should facilitate early identification and resolution of material accounting and reporting issues because the auditors will be involved earlier in the year. This is particularly important because interim financial information generally may include more estimates than annual financial statements.[37] Early involvement of the auditors should reduce the likelihood of restatements or other year-end adjustments.

We understand that the five largest U.S. accounting firms and others have each recently adopted policies to require that their clients have reviews of quarterly financial statements as a condition to acceptance of the audit.[38] Consequently, those firms already have implemented our proposed requirement for the companies that are audited by those firms.

We request comment on the need for independent auditors to review interim financial statements before they are filed with the Commission. Will interim reviews result in more reliable and credible interim financial statements? Will the involvement of independent auditors at quarterly intervals result in fewer restatements of Forms 10–Q and 10–QSB as a result of a year-end audit? What other benefits will be achieved? What will be the additional cost to registrants if the Commission requires interim reviews? Will having the auditors perform quarterly reviews shift some of the work away from the year-end audit, and therefore, result in lower year-end audit fees? What other ways can we enhance the quality and reliability of interim reporting?

We request comment on whether any modifications to SAS 71 are needed. For example, is there some formulation that would provide flexibility yet ensure that interim reviews meet objective minimum standards? In light of the proposed changes, are any modifications to Item 302(a) of Regulation S–K needed? For example, should we amend Item 302(a) to require all public companies to provide supplemental financial information?[39]

We also request your comments on the scope of the proposed requirement. Should the requirement apply to all public companies or only certain size public companies? If only certain size companies, what size and why? Should the requirement apply not only to

[30] SAS 61 requires independent auditors to communicate certain matters related to the conduct of an audit to those who have responsibility for oversight of the financial reporting process, specifically the audit committee. Among the matters to be communicated to the audit committee are: (1) methods used to account for significant unusual transactions; (2) the effect of significant accounting policies in controversial or emerging areas for which there is a lack of authoritative guidance or consensus; (3) the process used by management in formulating particularly sensitive accounting estimates and the basis for the auditor's conclusions regarding the reasonableness of those estimates; and (4) disagreements with management over the application of accounting principles, the basis for management's accounting estimates, and the disclosures in the financial statements.

[31] Rule 10–01(d) of Regulation S–X and Item 310(b) of Regulation S–B, 17 CFR 210.10–01(d) and 17 CFR 228.310(b). Under Item 302(a) of Regulation S–K, however, larger, more widely-when necessary, reconciles amounts previously reported in a Form 10–Q or Form 10–QSB. *See* 27 CFR 229.302(a).

[32] A review of interim financial information under SAS 71 generally is limited to inquiries and analytical procedures concerning significant accounting matters, and does not include search and verification procedures. The objective of a review of interim financial information differs significantly from the objective of an audit of financial statements in accordance with generally accepted auditing standards. The objective of a review of interim financial information is to provide the accountant with a basis for reporting whether material modifications should be made for such information to conform with GAAP. The objective of an audit is to provide a reasonable basis for expressing an opinion regarding the financial statements taken as a whole. A review may bring to the accountant's attention significant matters affecting the interim financial information, but it does not provide assurance that the accountant will become aware of all significant matters would be disclosed in an audit. *See SAS 71, para. 9 (''Objective of a Review of Interim Financial Information'').*

[33] Rule 10–01(d) of Regulation S–X, 17 CFR 210.10–01(d).

[34] A conforming change to Item 310 of Regulation S–B, 17 CFR 228.310, is being proposed to require the filing of the report if the small business issuer discloses in its filings with the Commission that an independent accountant has performed a review of interim financial statements

[35] The importance of analysts to the proper functioning of our capital markets is well-recognized. *See, e.g., Dirks v. SEC,* 43 U.S. 646, 656 (1983). We do not intend to cast doubt on the importance of that role or the appropriateness of quarterly earnings estimates

[36] In 1989, the Commission issued a concept release on whether it should propose amendments to its rules to require more involvement of the independent accountant in the preparation of interim financial information. *See* Exchange Act Release No. 26949 (June 20, 1989) [54 FR 27023]. The Treadway Commission recommended that the SEC require independent public accountants to review quarterly financial data before a company releases it to the public. Treadway Report, *supra* note 23, at 53.

[37] *See* Accounting Principles Board Opinion No. 28.

[38] One firm's policy apparently applies only to clients filing selected quarterly financial data under Item 302(a) of Regulation S–K, 17 CFR 229.302(a).

[39] Subjecting additional companies to the requirements of Item 302(a) would result in auditor review of their quarterly financial information, but the review would not necessarily have to occur on a timely basis.

interim financial statements contained in quarterly reports, but those contained in registration statements under the Securities Act of 1933 (''Securities Act'') and Exchange Act as well? Should we require that interim reviews be completed prior to quarterly ''earnings releases,'' when a company releases to the public financial results before the Form 10–Q or 10–QSB is filed?

The Commission recently proposed a requirement providing for the filing of quarterly financial results on Form 8–K if released prior to the deadline for filing the Quarterly Report on Form 10–Q or 10–QSB.[40] We also solicited comment on whether to shorten the filing deadline for Form 10–Q and 10–QSB. If we adopt those changes, how would that affect your overall view of these proposals?

Should we require that a report on the independent auditors' review be filed?[41] If so, what liability should attach to the report?[42] Should the report clearly set forth the scope of the review procedures and degree of reliance that can be placed on the report? Would the inclusion of a report benefit investors?

We request your comments on whether we should require companies to disclose whether the quarterly financial statements have been reviewed by independent auditors. The Blue Ribbon Committee recommends that SAS 71 be amended to require that audit committees discuss with the auditors the matters covered in SAS 61, including significant adjustments, management judgments and accounting estimates, significant new accounting policies and disagreements with management, prior to the filing of the Form 10–Q.[43] If SAS 71 is not amended as recommended by the Blue Ribbon Committee, should the Commission consider any other changes to its rules, such as to require disclosure about particular discussions between the audit committee and the auditors prior the company filing its Form 10–Q or 10–QSB? Should we continue to permit companies to decide whether to disclose that the independent auditors have performed the review but eliminate the requirement to file the review report if such disclosure is made?

B. The Audit Committee Report

Proposed new Item 306 of Regulations S–K and S–B and Item 7(e)(3) of Schedule 14A would require that the audit committee provide a report in the company's proxy statement (or information statement) disclosing whether the audit committee has reviewed and discussed the audited financial statements with management and discussed certain matters with the independent auditors.[44] Specifically, under paragraphs (a)(1), (a)(2), and (a)(3) of proposed Item 306 (paragraph (a)(4) is discussed separately, below), audit committees would be required to state whether:

(1) The audit committee has reviewed and discussed the audited financial statements with management;

(2) The audit committee has discussed with the independent auditors the matters required to be discussed by SAS 61, as may be modified or supplemented;[45] and

(3) The audit committee has received the written disclosures and the letter from the independent auditors required by ISB Standard No. 1, as may be modified or supplemented, and has discussed with the auditors the auditors' independence.

If the company does not have an audit committee, the board committee tasked with similar responsibilities, or the full board of directors, would be responsible for the disclosure.

Proposed paragraphs (a)(1), (2), and (3) of Item 306 would require audit committees to disclose whether the review and discussions took place and whether the letter and disclosures were received. The proposals would not require audit committees to perform the review and have the discussions. The proposed amendments would not require audit committees to take specific actions or adopt specific procedures. We are not proposing to require disclosure of the details of deliberations between or among the audit committee members, independent auditors, and management.[46]

The required disclosure will help inform shareholders of the audit committee's oversight with respect to financial reporting, and underscore the importance of the audit committee's participation in the financial reporting process. The proposed language of paragraphs (a)(1) and (a)(2) is similar to the language recommended by the Blue Ribbon Committee. Moreover, the language is consistent with the Blue Ribbon Committee's recommendation to the AICPA that it amend SAS 61.[47]

The disclosure required by paragraph (a)(3) relates to written disclosures, a letter from the independent auditors, and discussions between the audit committee and the independent auditors required by ISB Standard No. 1. The Commission has long recognized the importance of auditors being independent from their audit clients.[48] Public confidence in the reliability of a company's financial statements depends on investors perceiving the company's auditors as maintaining integrity and objectivity, being without conflicting interests with audit clients, and exercising independent judgment. Accordingly, we think that investors will benefit from the proposed disclosures.

Paragraph (a)(4) of the proposed rule would require the audit committee to state in the audit committee's report to be included in the company's proxy statement whether, based on the review and discussions described in paragraphs (a)(1) through (a)(3), anything came to the attention of the members of the audit committee that caused the audit committee to believe that the audited financial statements included in the company's Annual Report on Form 10–K or 10–KSB, as applicable, for the year then ended contain an untrue statement of material fact or omit to state a material fact necessary to make the statements made, in light of the circumstances under which they were made, not misleading. We believe that this proposed amendment would reinforce the audit committee's awareness and acceptance of its responsibilities, and make visible for investors the audit committee's role in promoting reliable and transparent financial reporting.

The proposed language of paragraph (a)(4) differs from the Blue Ribbon Committee's recommendation.[49] Concerns have been expressed that the language in the Blue Ribbon Committee's recommendation is a

[40] *See* Exchange Act Release No. 40632A (Nov. 13, 1998) [63FR 67174] (the ''Securities Act Reform Release''), at Section XI.B, in which we solicited comment on whether to shorter the filing deadline for quarterly reports to within 30 days after the first three fiscal quarters.

[41] SAS 71 provides guidelines for the preparation of a report.

[42] *See, e.g.,* Rule 436 of Regulation C of the Securities Act, 17 CFR 230.436. Rule 436 provides that a report on unaudited interim financial information shall not be construed to be a part of a registration statement prepared or certified by an accountant within the meaning of Sections 7 and 11 of the Securities Act.

[43] Blue Ribbon Report, *supra* note 7, at 36.

[44] At least in some measure, these discussions are already prescribed by the auditing literature. *See* SAS 61.

[45] *See* ASB Exposure Draft, *supra* note 13.

[46] The proposals, of course, are not intended to either diminish or enhance a company's current disclosure obligations under the proxy rules.

[47] Blue Ribbon Report, *supra* note 7, at 33.

[48] The federal securities laws recognize the importance of independent auditors. *See, e.g.,* Items 25 and 26 of Schedule A of the Securities Act and Sections 12(b)(1)(J) and 13(a)(2) of the Exchange Act, 15 U.S.C. §§ 78*l*(b)(1)(J) and 78m(a)(2).

[49] The Blue Ribbon Committee's recommendation is for the audit committee to state that, in reliance on the review and discussions with management and the auditors, the audit committee ''believes that the company's financial statements are fairly presented in conformity with Generally Accepted Accounting Principles (GAAP) is all material respects.'' Blue Ribbon Report, *supra* note 19.

GAAP ''certification'' that implicitly would require that the audit committee know all of the nuances of GAAP. We have modified the Blue Ribbon Committee's language to address that concern. In performing its oversight function, the audit committee likely will be relying on advice and information that it receives in its discussions with management and the independent auditors. Accordingly, the proposed language acknowledges that the audit committee will be forming its belief based on the discussions with management and the auditors, but also focuses members of the audit committee on their role in the financial reporting process. The statement that ''nothing came to the attention of the audit committee members,'' when combined with the need for a sound internal reporting system, discussed below, is intended to encourage audit committees to ''ask tough questions of management and outside auditors'' [50] to serve the interests of investors.

This approach is consistent with state corporation law that permits board members to rely on the representations of management and the opinions of experts retained by the corporation.[51] The Blue Ribbon Committee noted the ''impracticability of having the audit committee do more than rely upon the information it receives, questions, and assesses in making this disclosure.'' [52]

Some have expressed concerns that requiring a report from the audit committee will result in increased exposure to liability for the audit committee members. We do not believe that improved disclosure about the audit committee and increased involvement by the audit committee should result in increased exposure to liability. Under state corporation law, the more informed the audit committee becomes through its discussions with management and the auditors, the more likely that the ''business judgment rule'' will apply and provide broad protection.[53]

Under both state corporation law and the federal securities laws, if the audit committee's discussions with management and the independent auditors become part of the financial reporting process and are used to form a belief about the financial statements, the likelihood increases substantially that the audit committee's decisions about the financial statements and other matters will be protected.[54] Those discussions should serve to strengthen the ''information and reporting system'' that should be in place.[55] Adherence to a sound process should result in less, not more, exposure to liability.[56]

Finally, we believe that the proposed requirement of paragraph (a)(4) is consistent with our view that by signing documents filed with the Commission, board members implicitly indicate that they believe that the filing is accurate and complete. In this regard, we believe that the proposed rule is consistent with current rules requiring board members to sign the company's Annual Report on Form 10–K or 10–KS [57] and our recent proposals to amend the signature sections of Exchange Act and Securities Act reports.[58] As the Commission recently stated: ''When the public sees a corporate official's signature on a document, it understands that the official is thereby stating that he believes that the statements in the document are true.'' [59]

Proposed paragraph (b) of Item 306 would require that the new disclosure appear over the printed names of each member of the audit committee.[60] The requirement should help to emphasize the importance of the audit committee's role to shareholders. We do not propose to require that audit committee members provide individual signatures.

We request your comments on whether the proposed disclosure would provide useful information to shareholders, and would reinforce the audit committee's awareness and acceptance of its responsibilities. While the amendments are not designed to elicit disclosure about the substance of the audit committee's deliberations, would they nonetheless result in meaningful disclosure? Should we instead require more complete disclosure about the activities, processes and/or discussions of the audit committee, such as by requiring the committee to identify the significant accounting issues it considered and/or discussed with management and the independent auditors and the conclusions reached about those issues? Should we require further disclosures about the basis for the audit committee's belief about the financial statements?

Would the proposed rule's purposes be served if we required less disclosure about the audit committee than proposed? Are all of the requirements necessary? For example, should we merely supplement Item 7(e) to require the company to disclose more generally whether the audit committee has met with management and the independent auditors to discuss significant accounting issues that developed in preparing the financial statements? Is the disclosure about discussions with management sufficient? For example, the Blue Ribbon Committee

[50] *See supra* note 19.

[51] Delaware General Corporation Law, for example, states that board members are ''fully protected in relying in good faith upon the records of the corporation and upon such information, opinions, reports or statements presented to the corporation by any of the corporation's officers or employees . . . or by any other person as to matters the member reasonably believes are within such other person's professional or expert competence. * * *'' Del. Code Ann. tit. 8, 141(e).

[52] *See* Blue Ribbon Report, *supra* note 7, at 34; *see also id.* at 7 (''The [audit] committee's job is clearly one of oversight and monitoring, and in carrying out this job it acts in reliance on senior financial management and the outside auditors.'').

[53] *See* 1 American Law Institute, *Principles of Corporate Governance: Analysis and Recommendations* 134–98 (1994); *In re Caremark Int'l Inc. Derivative Litig.,* 698 A.2d 959, 967–70 (Del. Ch. 1996).

[54] We note that under Section 11 of the Securities Act, 15 U.S.C. § 77k, Section 10(b) of the Exchange Act, 15 U.S.C. § 78j(b), and other provisions of the federal securities laws, the members of an audit committee may have additional responsibilities, beyond the statement contemplated in subparagraph (a)(4), with respect to material misstatements and omissions. The Commission previously has stated that if ''an officer or director knows or should know that his or her company's statements concerning particular issues are inadequate or incomplete, he or she has an obligation to correct that failure.'' *Report of Investigation Pursuant to Section 21(a) of the Exchange Act Concerning the Conduct of Certain Former Officers and Directors of W.R. Grace & Co.,* Exchange Act Release No. 39157 (Sept. 30, 1997) [65 SEC Docket 1581].

[55] *Caremark,* 698A.2d at 970 (boards must assure ''themselves that information and reporting systems exist in the organization that are reasonably designed to provide to senior management and to the board itself timely, accurate information sufficient to allow management and the board, each within its scope, to reach informed judgments concerning both the corporation's compliance with law and its business performance'').

[56] *See generally* Report of the Public Oversight Board (''POB''), ''Directors, Management, and Auditors: Allies in Protecting Shareholder Interests,'' in which the POB discusses, among other things, a recommendation of the Kirk Panel to require audit committees to discuss with management and the auditors the quality of the accounting principles and judgments used in preparing financial statements. The POB notes its belief that compliance with that recommendation would not increase the exposure of board members to litigation because, among other things, the procedures will reduce the possibility that the financial statements are in fact misleading, thereby reducing the danger of finding directors at fault, and the additional steps taken should be persuasive in convincing courts and juries that the financial statements were prepared with care.

[57] The signature requirement is described in General instruction D of Form 10–K and General Instruction C of Form 10–KSB. The Commission amended the signature requirements for Form 10–K in 1980 in order to ''enhance director awareness of and participation in the preparation of the Form 10–K information.'' *See* Securities Act Release No. 6176 (Jan. 15, 1980) [45 FR 5972].

[58] Securities Act Reform Release, *supra* note 40, at Section XI.C.

[59] Brief for Securities and Exchange Commission, Amicus Curiae, at 7, *Howard v. Everex Systems, Inc.* (9th Cir. 1999) (No. 98–17324) (citing cases).

[60] This approach is consistent with the current treatment of the report from the company's compensation committee. *See* Instruction 9 to Item 402(a)(3) of Regulation S–K, 17 CFR 229.402.

recommends that the audit committee be required to state whether they discussed with management certain of the accounting matters that the audit committee must discuss with the auditors under SAS 61. Should we require that disclosure?

We request comment on alternative formulations of paragraph (a)(4) of proposed Item 306. We are considering an alternative formulation, for example, that would require the audit committee to state whether, based on the review and discussions with management and auditors, the audit committee is aware of any material modifications that should be made to the audited financial statements, and to state whether the audit committee recommended to the Board that the audited financial statements be included in the company's Annual Report on Form 10–K or 10–KSB (as applicable) filed with the Commission. Another possible formulation has been suggested by Ernst & Young.[61] Will those formulations achieve the intended objectives?

Should we require more disclosure about the auditors' independence? For example, should we require disclosure about the substance of the discussions between the audit committee and the auditors regarding the auditors' independence?

We request your comments on whether the requirement of proposed paragraph (b) of Item 306 would effectively encourage audit committee members to focus on the specific disclosure obligation. Would the purpose be served more effectively if we required individual signatures?

We request your comments on whether the proxy statement/information statement is the appropriate place for the proposed new disclosure. We propose to include the disclosure in the proxy materials because we believe that the disclosure may have a direct bearing on shareholders' voting decisions, and because the proxy or information statement is actually delivered to shareholders and is accessible on the SEC's web site. In addition, we are proposing that the disclosure only be provided in a proxy or information statement relating to an annual meeting of shareholders at which directors are to be elected (or special meeting or written consents in lieu of such meeting). We are not proposing to include the new disclosure in the annual report to shareholders[62] because that document is not accessible electronically on our web site, though under our rules it must be sent to every shareholder.[63]

The Blue Ribbon Committee, however, recommends that the disclosure be included in the company's Annual Report on Form 10–K and annual report to shareholders. Should we instead, or additionally, include the information in one or both of those documents? Should the disclosure be required only when the proxy or information statement relates to an election of directors? Should the disclosure only be required to be provided one time during the year (e.g., in a proxy statement for an annual meeting at which directors are to be elected, but not in proxy solicitation material used in a subsequent election contest during that same year)? What are the implications, if any, if the proxy statement that includes the audit committee's report is of a later date than the date the Form 10–K is filed? Is it feasible for audit committees' reports to be included in proxy statements given the timing of the distribution of proxies and the completion of audit procedures and other events that must occur before the audit committee report may be finalized?

There may be companies, such as companies registered under section 15(d)[64] of the Exchange Act, that are not required to prepare proxy statements. Should we require those companies to provide the disclosures in another filing, such as in the Form 10–K or 10–KSB? Would we need to provide a safe harbor for the disclosures by those companies? If we do not make the requirement applicable to Section 15(d) companies, should we keep the text of the new requirement in Regulation S–K or, for example, move it into Item 7 of Schedule 14A?

C. Audit Committee Charters

We are proposing to require companies to disclose in their proxy statements or information statements whether their audit committee is governed by a charter. In addition, if the audit committee has a charter, a copy of the charter would have to be included as an appendix to the proxy or information statement at least once every three years. The new requirement would appear in new paragraph (e)(3) under Item 7 of Schedule 14A.

The new disclosure should help shareholders assess the role and responsibilities of the audit committee, and help focus committee members on their responsibilities as expressed in the charter. We believe that audit committees that have their responsibilities set forth in written charters are more likely to play an effective role in overseeing the company's financial reports.

The Blue Ribbon Committee recommends that the audit committee state whether it has satisfied its responsibilities during the prior year in compliance with its charter. We are concerned that requiring a statement about compliance with the charter may have the undesired effect of encouraging skimpy, broadly-worded and vague committee charters to minimize the audit committee members' exposure to liability. Accordingly, we are not proposing to require any statements about whether the audit committee has complied with the charter. The proposed amendments would not require companies to adopt audit committee charters, or dictate the content of the charter if one is adopted.[65]

Should we require companies to disclose whether they have adopted an audit committee charter, but not require that the charter be attached as an appendix to the proxy statement? In that case, we ask you to consider whether we should require a plain English summary of the charter's material terms, rather than a copy of the entire charter. Would such a disclosure requirement result in boilerplate disclosures? Is the charter itself useful information for investors?

Should we require the audit committee to disclose whether it has complied with its charter, as recommended by the Blue Ribbon Committee? We could require, for example, that the audit committee state whether it has complied in all material respects with the charter. Would a materiality threshold be appropriate, or some other threshold, such as compliance in all significant or substantive respects? We request your comments on whether we should instead require disclosure about any material deviations by the audit committee from their charter

[61] *See* Exhibit 1 to Letter from Ernst & Young to Harvey J. Goldschmid, General Counsel, and Lynn E. Turner, Chief Accountant, SEC (Aug. 20, 1999). A copy of the letter has been placed in the public file for this rulemaking.

[62] *See* Rule 14a–3 of the Exchange Act, 17 CFR 240.14a–3.

[63] Nothing, of course, would preclude a company from including such disclosures in its annual report to shareholders or in any other report.

[64] 15 U.S.C. § 78o(d).

[65] We note, however, that, in response to the Blue Ribbon Committee recommendations, the NYSE, NASD, and AMEX have proposed to require the audit committee to: (1) Adopt a formal written charter that is approved by the full board of directors and that specifies the scope of the committee's responsibilities, and how it carries out those responsibilities, including structure, processes, and membership requirements; and (2) review and reassess the adequacy of the audit committee's charter on an annual basis.

obligations. We request your comments on whether a requirement to disclose compliance with an audit committee charter will have the undesired effect of encouraging skimpy, broadly-worded and vague committee charters. If any such disclosure is required, would we need to provide a safe harbor from liability for that disclosure? If so, what kind of safe harbor is needed?

Is requiring that the charter be attached as an appendix every three years the appropriate time frame? Should we require that it be attached as an appendix more frequently or less frequently? [66] Should we require that the charter also be attached as an appendix when there has been a material or substantive—or any—change in the charter?

Should we require reporting companies whose securities are not listed on the NYSE or AMEX or quoted on Nasdaq to disclose whether they have a charter? If these companies do not have a charter, should we require disclosure of the operative document of the audit committee (articles of incorporation, by-laws, etc.) or the material terms of the document? If so, should those documents be filed once every three years or some other interval? If a company does not have a charter or similar document, should we require disclosure of that fact?

Finally, we seek comments on whether the disclosure is properly included in the proxy or information statement, as proposed, or whether the disclosure should be included alternatively, or additionally, in another document, such as the annual report to shareholders, or the Annual Report on Form 10–K or 10–KSB.

D. Disclosure About ''Independence'' of Audit Committee Members

As early as 1940, the Commission encouraged the use of audit committees composed of independent directors.[67] As the Commission staff stated in a report to Congress in 1978, ''[i]f the [audit] committee has members with vested interests related to those of management, the audit committee probably cannot function effectively. In some instances this may be worse than having no audit committee at all by creating the appearance of an effective body while lacking the substance.'' [68] Further, as the Blue Ribbon Committee noted, '' * * * common sense dictates that a director without any financial, family, or other material personal ties to management is more likely to be able to evaluate objectively the propriety of management's accounting, internal control and reporting practices.'' [69]

In response to the Blue Ribbon Committee's recommendations, the NYSE, AMEX, and NASD have proposed amendments to their respective listing standards regarding, among other things, the ''independence'' of all audit committee members. The NYSE's, AMEX's, and NASD's proposed rule changes would provide a narrowly tailored exception to a requirement that all members of the audit committee be independent. Specifically, the NYSE, AMEX, and NASD have proposed that, under exceptional and limited circumstances, one director who is not independent may be appointed to the audit committee if the Board determines that membership on the committee by the individual is required by the best interests of the corporation and its shareholders, and the Board discloses, in the next annual proxy statement subsequent to such determination, the nature of the relationship and the reasons for that determination.

Because of the importance of having an audit committee that is comprised of independent directors, we believe that shareholders should know when a director who is not independent is a member of an audit committee. We are proposing to require that companies whose securities are not listed on the NYSE or AMEX or quoted on Nasdaq, including small business issuers, disclose in their proxy statements whether, if they have an audit committee, the members are ''independent'' within the definition of the NYSE's, AMEX's, or NASD's proposed amendments to their listing standards. We are also proposing rules to require that for companies whose securities are listed on the NYSE or AMEX or quoted on Nasdaq, if the company's board determines in accordance with the proposed amendments to section 303.02(D) of the NYSE's listing standards, Section 121(B)(b)(ii) of the AMEX's listing standards, or sections 4310(c)(26)(B)(ii) or 4460(d)(2)(B) of the NASD's listing standards, as applicable and as may be modified or supplemented, to appoint one director to the audit committee who is not independent (as independence is defined in sections 303.01(B) (2)(a) and (3) of the NYSE's listing standards, Section 121(A) of AMEX's listing standards or Section 4200(a)(15) of the NASD's listing standards, as applicable and as may be modified or supplemented), the company must disclose the nature of the relationship that makes that individual not independent and the reasons for the board's determination. Small business issuers are not required to comply with this requirement.[70]

We request comment on whether the disclosures will help inform investors about the independence of the audit committee. If the proposed amendments to the NYSE's, AMEX's, and NASD's listing standards are not adopted, are there disclosures that we could require that would achieve the same purposes? Is the proposed requirement to disclose the nature of the relationship of the director who is not ''independent'' and the basis for the Board's determination specific enough, or will the requirement result in boilerplate disclosure?

Companies whose securities are not listed on the NYSE or AMEX or quoted on Nasdaq would be able to choose which definition of ''independence'' to apply to the audit committee members in making the disclosure. Whichever definition is chosen must be applied consistently to all members of the audit committee. Should we require small business issuers to comply with the requirement to disclose the nature of the relationship that makes the individual not independent? Will permitting companies to choose which definition to apply confuse investors in comparing companies? Should we instead mandate which definition should be used, and if so, which definition?

E. Proposed Safe Harbors

In making these proposals, we do not intend to subject companies or their directors to increased exposure to liability under the federal securities laws, or to create new standards for directors to fulfill their duties under state corporation law. We do not believe that the disclosure requirements will result in increased exposure to liability. To the extent the proposed disclosure requirements would result in more clearly defined procedures for, and disclosure of, the operation of the audit committee, liability claims alleging breach of fiduciary duties under state law actually may be reduced.

[66] For example, only certain documents on file with the Commission may be incorporated by reference for more than five years. *See* General Instruction (a) to Regulation S–K, 17 CFR 229.10(a).

[67] *See supra* note 20.

[68] Staff of the SEC, 95th Cong., 2d Sess., Report to Congress on the Accounting Profession and the Commission's Oversight Role, Subcommittee on Governmental Efficiency and the District of Columbia of the Senate Committee on Governmental Affairs, at 97 (Comm. Print July 1978).

[69] Blue Ribbon Report, *supra* note 7, at 22.

[70] The NASD and AMEX excluded small business issuers from certain of the proposed amendments to their listing standards, including the requirement that all audit committee members be independent.

We recognize that, notwithstanding the audit committee's critical oversight role of the financial reporting process and financial statements, management ultimately has responsibility for the company's financial statements. As discussed above in Section III.B regarding the audit committee's report, the proposed disclosure requirements differ from the Blue Ribbon Committee's recommendations in response to liability concerns. In addition, we propose to follow the Blue Ribbon Committee's recommendation to adopt liability ''safe harbors'' to cover the new disclosures.[71] The ''safe harbors'' would track the treatment of compensation committee reports under Item 402 of Regulation S–K,[72] and would appear in proposed paragraph (c) in new Item 306 of Regulations S–K and S–B and in proposed paragraph (e)(v) of Schedule 14A. Under the ''safe harbors,'' the additional disclosure would not be considered ''soliciting material,'' ''filed'' with the Commission, subject to Regulation 14A or 14C or to the liabilities of Section 18 of the Exchange Act, except to the extent that the company specifically requests that it be treated as soliciting material, or specifically incorporates it by reference into a document filed under the Securities Act or the Exchange Act.[73]

We request your comments on whether we should adopt these proposed liability ''safe harbors'' to cover the information disclosed under the proposed amendments. Is a safe harbor necessary?

Should the safe harbors apply to all of the required disclosures or only certain of the disclosures? Is a safe harbor needed for factual statements? For example, is a safe harbor needed for the disclosure regarding whether the audit committee has discussed with the auditors the auditors' independence and received the written disclosures and letter from the auditors when these disclosures are factual in nature? Is the scope of the safe harbor appropriate?

IV. Request for Comments

We request your comments on the proposals, other matters that may have an impact on the proposals, and your suggestions for additional changes. In addition to the specific questions raised in Section III above, we request your comment on the matters discussed below.

First, the proposals generally do not distinguish between a Fortune 500 company and a small start-up company reporting on small business forms.[74] We request your comment on whether the scope of one or more of the proposed new requirements should be narrowed to exclude companies under a certain size. If so, should we exclude companies considered under the Commission's rules to be ''small business issuers'' (companies that have revenues and public float of less than $25 million)? The Commission has proposed to revise the definition of small business issuer to include companies with less than $50 million in annual revenues, and to delete the public float portion of the test.[75] If that proposal were adopted, would that affect your view on the applicability of today's proposals to small companies? Should there be a higher cutoff, such as $100 million or $200 million public float and/or revenues? If there should be a different standard, should it be based on additional or alternative criteria, such as total assets or reporting history?

The Blue Ribbon Committee's recommendations directed to the Commission are silent on whether to apply the requirements to all companies, regardless of size. In preparing your comments, you should consider whether the proportionate cost of complying with some of the proposals may be greater for smaller companies than for larger ones. You should also consider, however, that one recent study found that the incidence of financial fraud at smaller companies may be greater than at larger companies.[76]

We also request your comments on whether any or all of the proposals should apply to investment companies registered under the Investment Company Act of 1940. The proposals for requiring audit committee disclosure as currently formulated would only apply to closed-end funds. As we discussed above, our proposals are intended to work in conjunction with the listing standards of the NYSE, AMEX, and the NASD that would impose requirements on companies for their audit committees. Because mutual funds are not subject to the listing standards of an exchange or a national securities association that require companies to have audit committees, the Commission has not included those funds in the proposals at this time.[77] We also request your comments on whether interim financial statements of closed-end funds should be reviewed by independent auditors before being sent to shareholders.[78]

The proposals would not apply to ''foreign private issuers,'' which are exempt from the proxy rules, and which are not required to file Quarterly Reports on Form 10–Q or 10–QSB.[79] We request your comments on whether any one or more of our proposed amendments should apply to ''foreign private issuers.''

V. Paperwork Reduction Act

Certain provisions of the proposed amendments to Regulations 14A, 14C, S–X, S–B, and S–K contain ''collection of information'' requirements within the meaning of the Paperwork Reduction Act of 1995 (44 U.S.C. 3501 *et seq.*), and the Commission has submitted proposed revisions to those rules to the Office of Management and Budget (''OMB'') for review in accordance with 44 U.S.C. 3507(d) and 5 CFR 1320.11. The titles for the collections of information are: (1) ''Proxy Statements—Regulation 14A (Commission Rules 14a–1 through 14a–15) and Schedule 14A;'' (2) Information Statements—Regulation 14C (Commission Rules 14c–1 through 14c–7 and Schedule 14C); (3) Regulation S–X; (4) Regulation S–B; and (5) Regulation S–K.[80] An agency may not conduct or sponsor, and a person is not required to respond to, a collection of information unless it displays a currently valid control number.

Schedule 14A (OMB Control No. 3235–0059)[81] and Schedule 14C (OMB

[71] Blue Ribbon Report, *supra* note 7, at 35.

[72] *See* Instruction 9 to Item 402(a)(3) of Regulation S–K, 17 CFR 229.402(a)(3).

[73] Of course, the antifraud provisions of these Acts would continue to apply.

[74] The proposed disclosure requirements about the independence of audit committees does, however, distinguish between companies whose securities are listed on the NYSE or AMEX or quoted on Nasdaq and all other companies.

[75] *See* Securities Act Reform Release, *supra* note 40, at Section V.E.2.

[76] *See* Beasley, Carcello, and Hermanson, Fraudulent Financial Reporting: 1987–1997, An Analysis of U.S. Public Companies (Mar. 1999) (study commissioned by the Committee of Sponsoring Organizations of the Treadway Commission) (the ''COSO Report'').

[77] *See* proposed paragraph (e)(3)(vi) of Item 7, Schedule 14A. The proposed rules also exclude unit investment trusts (''UITs'') from the disclosure requirements because they do not have boards of directors and, therefore, do not have audit committees.

[78] Because closed-end and open-end funds and UITs generally are not required to file Form 10–Qs, these investment companies would not be subject to the proposal requiring the review of quarterly financial statements filed on Form 10–Q. Business development companies, however, are required to file Form 10–Qs and would be subject to the proposal.

[79] A ''foreign private issuer'' must file reports on Form 6–K promptly after the information required by the Form is made public in accordance with the laws of its home country or a foreign securities exchange. *See* 17 CFR 240.13a–16(b). The proposed amendments would, however, apply to a ''foreign private issuer'' that elected to file reports under the disclosure rules for U.S. companies.

[80] The Commission is not proposing any changes to Forms 10–Q or 10–QSB.

[81] 17 CFR 240.14a–101.

Control No. 3235–0057)[82] were adopted pursuant to Sections 14(a) and 14(c) of the Exchange Act. Schedule 14A prescribes information that a company must include in its proxy statement to ensure that shareholders are provided material information relating to voting decisions. Schedule 14C prescribes information that a company must include in its information statement under those circumstances.

The Commission currently estimates that Schedule 14A results in a total annual compliance burden of 173,906 hours. The burden was calculated by multiplying the estimated number of entities filing Schedule 14A annually (approximately 9,892) by the estimated average number of hours each entity spends completing the form (approximately 13 hours).[83] The Commission currently estimates that Schedule 14C results in a total annual compliance burden of 4,448 hours. The burden was calculated by multiplying the estimated number of entities filing Schedule 14C annually (approximately 253) by the estimated average number of hours each entity spends completing the form (approximately 13 hours). The Commission based the number of entities that would complete and file each of the forms on the actual number of filers during the 1998 fiscal year. The staff estimated the average number of hours each entity spends completing each of the forms by contacting a number of law firms and other persons regularly involved in completing the forms. Regulations S–X, S–K, and S–B do not impose reporting burdens directly on public companies. For administrative convenience, each of these regulations is currently assigned one burden hour. Although these regulations set forth disclosure requirements, the burden associated with the requirements is reflected in the forms and schedules that refer to those regulations.

We believe that the proposed amendments will bolster investor confidence in the securities markets by informing investors about the important role that audit committees play in the financial reporting process and enhance the reliability and credibility of financial statements of public companies. The proposed amendments would require companies to include additional disclosure in Schedules 14A and 14C, including certain information about the company's audit committee. The audit committee would be required to disclose whether the audit committee had certain discussions with management and the company's auditors. The substance of the discussions would not be required to be disclosed. The proposed amendments would also require companies that have adopted a written charter to include a copy of the charter as an appendix to Schedules 14A and 14C at least once every three years. The amendments do not require a company to prepare a charter. We estimate that, on average, the additional disclosure would require approximately one additional burden hour per filing, whether on Schedule 14A or 14C. Accordingly, the proposed amendments, if adopted, would result in an aggregate of 9,892 additional burden hours for Schedule 14A annually, and an aggregate 253 additional burden hours for Schedule 14C annually. We request your comments on the accuracy of our estimates.

Compliance with the disclosure requirements is mandatory. There would be no mandatory retention period for the information disclosed, and responses to the disclosure requirements will not be kept confidential.

Pursuant to 44 U.S.C. 3506(c)(2)(B), the Commission solicits comments to: (i) Evaluate whether the proposed collection of information is necessary for the proper performance of the functions of the agency, including whether the information will have practical utility; (ii) evaluate the accuracy of the Commission's estimate of the burden of the proposed collection of information; (iii) determine whether there are ways to enhance the quality, utility, and clarity of the information to be collected; and (iv) evaluate whether there are ways to minimize the burden of the collection of information on those who are to respond, including through the use of automated collection techniques or other forms of information technology.

Persons submitting comments on the collection of information requirements should direct the comments to the Office of Management and Budget, Attention: Desk Officer for the Securities and Exchange Commission, Office of Information and Regulatory Affairs, Washington, DC 20503, and should send a copy to Jonathan G. Katz, Secretary, Securities and Exchange Commission, 450 Fifth Street, NW., Washington, DC 20549–0609, with reference to File No. S7–22–99. Requests for materials submitted to OMB by the Commission with regard to these collections of information should be in writing, refer to File No. S7–22–99, and be submitted to the Securities and Exchange Commission, Records Management, Office of Filings and Information Services. OMB is required to make a decision concerning the collection of information between 30 and 60 days after publication of this release. Consequently, a comment to OMB is assured of having its full effect if OMB receives it within 30 days of publication.

VI. Cost-Benefit Analysis

The proposed amendments should improve disclosure related to the functioning of the corporate audit committees. We believe that the proposed amendments will bolster investor confidence in the securities markets by informing investors about the important role that audit committees play in the financial reporting process and enhance the reliability and credibility of financial statements of public companies. As the Blue Ribbon Committee summarized:

> Improving oversight of the financial reporting process necessarily involves the imposition of certain burdens and costs on public companies. Despite these costs, the Committee believes that a more transparent and reliable financial reporting process ultimately results in a more efficient allocation of and lower cost of capital. To the extent that instances of outright fraud, as well as other practices that result in lower quality financial reporting, are reduced with improved oversight, the benefits clearly justify these expenditures of resources.[84]

Reviews of Quarterly Financial Statements

We propose to require interim reviews of quarterly financial statements filed on Form 10–Q or 10–QSB.[85] Under the proposed amendments, the company's quarterly financial statements would have to be reviewed by independent auditors using ''professional standards and procedures for conducting such reviews, as established by generally accepted auditing standards, as may be modified or supplemented by the Commission.'' Currently, that means that the review would follow the procedures established by SAS 71. The proposed amendments apply only to the financial information contained in the company's quarterly report on Form 10–Q or 10–QSB. Accordingly, it would not impose any requirements on quarterly financial information that may be released to the public before the filing of the Form 10–Q or 10–QSB, such as the so-called quarterly ''earnings release.''

We believe that companies are under increasing pressure to meet financial

[82] 17 CFR 240.14c–101.

[83] Thirteen hours is 25% of the total company reporting time (75% is shown as cost).

[84] Blue Ribbon Report, *supra* note 7, at 19.

[85] *See* Section III.A above.

analysts' expectations, and that pressure can be even more acute in the context of reports on quarterly earnings. We believe that the participation of auditors in the financial reporting process at interim dates will help to counterbalance that pressure and impose increased discipline on the process of preparing interim financial information. Auditor involvement in the financial reporting process earlier in the year should facilitate timely identification and resolution of significant and sensitive issues and result in fewer year-end adjustments, which should reduce the cost of annual audits. The increased focus and discipline imposed on the preparation of interim financial statements should enhance the efficiency of the capital markets by improving the reliability of quarterly financial statements.

We do not currently have sufficient information to quantify these or other potential benefits. We, therefore, request your comments, including supporting data, on the degree to which the proposal is likely to improve the reliability of interim financial reporting.

The five largest U.S. accounting firms, the so-called ''Big 5,'' and some other firms, currently have in place policies that require that their clients have interim reviews as a condition to acceptance of an audit. The firms' adoption of these policies, and the acceptance of them by their clients, indicates that the value of these reviews justifies the associated costs.

Based on the staff's review of the Compustat database containing auditor information for about 8,600 companies for calendar year 1997, we estimate that approximately 75% of public companies (about 6,450) are clients of the Big 5 accounting firms, and that approximately 25% (or 2,150) are audited by other accounting firms. We request your comments on the accuracy of those estimates, including supporting data. Some of those 2,150 companies are audited by firms that have quarterly review policies similar to those of the Big 5 firms.

Based on the data provided to staff by the SEC Practice Section of the AICPA (''SECPS''), we estimate the incremental cost to conduct a SAS 71 review will be nominal for those companies currently audited by the Big 5 firms and for the remaining companies would range from approximately $1,000 to about $4,000 per quarter. The total cost of upgrading for all companies audited by non-Big 5 accounting firms would be approximately $16 million per year. We request your comments and supporting empirical data on the accuracy of these estimates and conclusions.

Firms providing information to the SECPS indicated that the procedures they currently use are similar, if not the same, as those described in SAS 71. Most indicated that review reports are seldom issued. The firms also indicated that they are not aware of (and do not expect) clients switching auditing firms because of their new policies.

The firms providing information to the SECPS identified several benefits that they believe would result from the reviews, including better interim reporting, earlier identification and resolution of accounting issues, improvement in the quality of accounting estimates, and improved communications between clients and auditors. Medium and smaller sized accounting firms, however, indicated to the SECPS that SAS 71 reviews of small companies' interim financial statements may cause delays in filing Forms 10–Q or 10–QSB, be relatively more costly for small companies, be hampered by inadequate financial reporting processes, and would result in small companies shifting work from the company to the CPA firm.

The firms generally indicated, however, that the costs of reviews of quarterly financial statements vary depending on several factors, including: (i) The sophistication of the client's accounting and reporting system; (ii) the quality of the client's accounting personnel; (iii) the identification of ''fraud risk factors;'' (iv) the client's industry; (v) the number and location of the client's subsidiaries; (vi) the seasonality of the client's business; (vii) the existence of contentious accounting issues; and (viii) whether there will be a staffing ''crunch'' at the firm to handle the reviews each quarter.

Approximately half of the firms consulted believed that the cost of the reviews would be offset, in part, by a reduction in the annual audit fee, although the amount of the reduction in audit fees may vary based on, among other things, the performance of substantive audit procedures during the review, whether the review results in the client having better internal accounting and reporting controls, and how the results of the review impact planning for the annual audit. Because the cost of reviews would be only partially offset by a reduction of year-end audit fees, overall audit and review fees paid by the company to the auditors would increase.

Disclosure Related to the Functioning of the Audit Committee

The principal benefits of the proposals are improved disclosure relating to the functioning of corporate audit committee and enhanced reliability and credibility of financial statements. The benefits of improved disclosure regarding the audit committee's communications are not readily quantifiable. We believe, however, that they would include increased market efficiency due to improved information and investor confidence in the reliability of companies' financial disclosures. We request your comments and empirical data on whether the improved disclosure will have that result.

We believe the costs associated with this proposal would derive principally from the corresponding disclosure obligations; this is because we are not placing any substantive requirements on audit committees or their members. Based on the staff's experience with proxy and information statements, and analogous cost estimates, we believe that the additional disclosure contemplated by the proposed amendments would, on average, require approximately three-fourths of a page in a company's proxy or information statement. A financial printing company informed the staff that adding up to three-fourths of a page in the proxy statement would not likely increase the printing cost to the company. That is because up to an extra three-fourths of a page can normally be incorporated without increasing the page length by reformatting the document. The printer reported that adding more than three-fourths of a page could increase costs by about $1,500 for an average sized company. Accordingly, based on our preliminary estimates, there should be little, if any, additional printing costs from these additional disclosures. We seek your comments on the accuracy of these cost estimates, and we ask you to submit cost data to support your analysis.

We believe, however, that disclosure required by the proposed amendments could result in other costs. First, some companies may be required to set up procedures to monitor the activities of the audit committee in order to collect and record the information required by the proposed amendments. In our view, such monitoring costs are most likely to result from the proposed disclosure of the audit committee's discussions with management and the independent auditors and receipt of disclosures and a letter from the independent auditors.

Second, some companies may seek the help of outside experts, particularly outside legal counsel, in formulating responses to the new requirements. In some circumstances, for instance, the audit committee may seek the advice of legal counsel before making the required

disclosure about the audited financial statements. We request your comments, including supporting data, on the magnitude of these costs and any other costs that we may not have mentioned.

For purposes of the Paperwork Reduction Act, we estimate that our proposed disclosures would, on average, impose one additional burden hour on each filer of Schedule 14A or 14C, or an aggregate annual total of 15,445 additional burden hours. That estimate is based on current burden hour estimates and the staff's experience with such filings. We further estimate that approximately 75% of the extra burden hours, or 11,584 hours, will be expended by companies' internal staff, and the remaining 25%, or 3,861 hours, by outside professional help.[86] These percentage estimates, which are based on current burden hour estimates and the staff's experience with such filings, reflect the time companies would spend preparing the additional disclosures in the proxy statement or information statement.[87] Assuming that the internal staff costs the company an average of about $85 per hour, the aggregate annual cost for internal staff assistance would amount to approximately $980,000. If we assume that the outside professional assistance would have an average cost of approximately $125 per hour, the aggregate annual paperwork cost would be approximately $500,000. The total annual costs would accordingly be about $1,500,000. We request your comments on the reasonableness of these estimates and their underlying assumptions.

These proposals are not intended to increase companies' or directors' exposure to liability under federal or state law. Indeed, we believe that the proposal will likely result in better and more reliable financial reporting. As an extra safeguard, the proposed amendments include liability ''safe harbors'' similar to that which applies to compensation committee reports under current rules.[88] We nonetheless request your comments on whether the proposals could have the unintended effect of increasing companies' and/or directors' exposure to liability. Your comments should specifically address the bases for liability concerns, including the underlying case law if applicable, and your estimates of any additional costs that may result from increased liability.

Are there any other costs or benefits that we have not identified? Please identify them and provide data.

VII. Consideration of Impact on the Economy, Burden on Competition, and Promotion of Efficiency, Competition and Capital Formation

For purposes of the Small Business Regulatory Enforcement Fairness Act of 1996,[89] the Commission is requesting information regarding the potential impact of the proposals on the economy on an annual basis. Commentators should provide empirical data to support their views.

Section 23(a) of the Exchange Act requires the Commission, when adopting rules under the Exchange Act, to consider the anti-competitive effects of any rule it adopts. We do not believe that the proposals would have any anti-competitive effects since the proposals should improve the transparency, reliability, and credibility of companies' financial statements. We request comment on any anti-competitive effects of the proposals. In addition, Section 3(f) of the Exchange Act requires the Commission, when engaging in rulemaking that requires it to consider or determine whether an action is necessary or appropriate in the public interest, to consider whether the action will promote efficiency, competition, and capital formation. We believe that the proposals would bolster investor confidence in the securities markets by improving the transparency of the role of corporate audit committees and enhancing the reliability and credibility of financial statements of public companies. Accordingly, the proposals should promote capital formation and market efficiency. We request comment on these matters.

VIII. Initial Regulatory Flexibility Analysis

This Initial Regulatory Flexibility Analysis has been prepared in accordance with 5 U.S.C. § 603. It relates to proposed amendments to rule 10–01 of Regulation S–X, Item 310 of Regulation S–B, and Item 7 of Schedule 14A, under the Exchange Act, and proposed new Item 306 of Regulations S–B and S–K.

A. Reasons for the Proposed Action

The new rules and amendments to current rules are being proposed to improve disclosure relating to the functioning of corporate audit committees and to enhance the reliability and credibility of financial statements of public companies. The proposals are based in large measure on recommendations recently made by the Blue Ribbon Committee on Improving the Effectiveness of Corporate Audit Committees. The required disclosure will help inform shareholders of the audit committee's role in overseeing the preparation of the financial statements and underscore the importance of the audit committee's participation in the financial reporting process.

B. Objectives

The reviews required by our proposals should facilitate early identification and resolution of material accounting and reporting issues because the auditors will be involved earlier in the year. More reliable interim financial information will be available to investors, and early involvement of the auditor should reduce the number of restatements or other year-end adjustments. We believe that the proposed disclosures would reinforce the audit committee's awareness and acceptance of its responsibilities, and make visible for shareholders the audit committee's role in promoting reliable and transparent financial reporting.

C. Legal Basis

The Commission is proposing the amendments and new rules pursuant to its authority under Sections 2, 13, 14, and 23 of the Securities Exchange Act.

D. Small Entities Subject to the Rule

The proposed amendments would affect small businesses that are required to file proxy materials on Schedules 14A or 14C and Quarterly Reports on Form 10–Q or 10–QSB, under the Exchange Act. Exchange Act Rule 0–10 defines ''small business'' as a company whose total assets on the last day of its most recent fiscal year were $5 million or less. We estimate that there are approximately 830 reporting companies that are not investment companies with assets of $5 million or less. The Commission bases its estimate on information from the Insight database from Compustat, a division of Standard and Poors.

Most reporting companies file either a proxy statement on Schedule 14A or an information statement on Schedule 14C, and all reporting companies must file quarterly reports on Form 10–Q or 10–QSB. Some companies are not subject to

[86] These assumptions are based on the staff's experience with these filings. We believe that a company's internal staff will typically carry most of the burden of preparing the proposed additional disclosures, and will consult with outside professionals only on specific issues that the company may periodically encounter in preparing the proxy statement or information statement.

[87] The estimate does not include the amount of time the audit committee would spend conducting the discussions with the independent accountants and management to which new Item 306 of Regulation S–K and the amendments to Item 7 of Schedule 14A refer. The amendments, if adopted, would not require that the audit committee hold the discussions, but merely that it disclose whether the discussions have taken place.

[88] *See supra* note 72.

[89] Pub. L. No. 104–121, tit. II, 110 Stat. 857 (1996).

the 14A or 14C requirements because their securities are not registered under Section 12(b) or 12(g) under the Exchange Act. These companies may, however, be subject to the Form 10–Q or Form 10–QSB requirements. Because these requirements turn in part on the number of shareholders and amount of assets—which are subject to change—we have no reliable way to determine exactly how many reporting small businesses may be affected by the rule proposals.

E. Reporting, Recordkeeping, and Other Compliance Requirements

Under the proposed rules, public companies, both large and small, would be required to provide certain additional disclosure in their proxy statements regarding the company's audit committee. Companies would be required to include reports of their audit committees that include disclosure about whether certain conversations between the audit committee and management and the auditors took place. No disclosure of the substance of the discussions is required.

1. Reviews of Quarterly Financial Statements

We propose to require companies to engage their independent auditors to conduct interim reviews of their quarterly financial statements prior to the company filing its Form 10–Q or 10–QSB. Based on information provided to the Commission by the SECPS, it appears that most companies engage their independent auditors to undertake some level of review of their quarterly financial statements.

Medium and smaller sized accounting firms indicated to the SECPS that SAS 71 reviews of small companies' interim financial statements may cause delays in filing Forms 10–Q or 10–QSB, be relatively more costly for all companies, be hampered by inadequate financial reporting processes, and would result in small companies shifting financial responsibilities from the company to the CPA firm. Firms providing information to the SECPS also commented that the costs of compliance would be partially offset by a reduction in year-end audit fees and would lead to earlier identification of accounting and auditing issues and an improvement in the quality of the process used for preparing interim financial reports.

2. Disclosure Related to the Functioning of the Audit Committee

Some of the proposed amendments would increase disclosure of the audit committee's role. The increased disclosure will require all entities, large and small, to spend additional time and incur additional costs in preparing disclosures. Smaller companies may incur additional costs to set up procedures to monitor the activities of the audit committee in order to collect and record the information required by the proposed amendments. Smaller companies may also incur additional costs in seeking the help of outside experts, particularly outside legal counsel, in formulating responses to the new requirements.

F. Duplicative, Overlapping or Conflicting Federal Rules

The Commission believes that there are no rules that duplicate, overlap, or conflict with the proposed rules.

G. Significant Alternatives

The Regulatory Flexibility Act directs the Commission to consider significant alternatives that would accomplish the stated objectives, while minimizing any significant adverse impact on small entities. In connection with the proposed amendments, the Commission considered the following alternatives: (a) The establishment of differing compliance or reporting requirements or timetables that take into account the resources available to small entities; (b) the clarification, consolidation, or simplification of compliance and reporting requirements under the rule for small entities; (c) the use of performance rather than design standards; and (d) an exemption from coverage of the rule, or any part thereof, for small entities.

We considered not applying the proposals to small business issuers. We believe investors in smaller companies would want and benefit from the disclosures about the audit committee and the advantages of interim reviews just as much as investors in larger companies. In addition, the COSO Report found that the incidence of financial fraud was greater at small companies.[90] The report specifically noted that the ''concentration of fraud among companies with under $50 million in revenues and with generally weak audit committees highlights the importance of rigorous audit committee practices, even for smaller organizations.'' [91] In light of the COSO Report, it may be inconsistent with the purposes of the rule to exempt small business issuers from the proposed requirement for interim reviews.

We also considered the alternative of only requiring companies whose securities are listed on the NYSE or AMEX or quoted on Nasdaq to include disclosures regarding the independence of their audit committee members. We believe that the proposed amendments that require disclosure regarding the independence of the members of their audit committee impose only minimal additional costs but would provide useful information to investors.

The proposed rule amendments and new rules are designed to improve disclosure relating to the functioning of corporate audit committees and to enhance the reliability and credibility of financial statements for all public companies, and currently we do not believe it is feasible to further clarify, consolidate or simplify the rule for small entities.

H. Solicitation of Comments

The Commission encourages the submission of comments with respect to any aspect of this Initial Regulatory Flexibility Analysis. In particular, the Commission seeks comment on: (i) The number of small entities that would be affected by the proposed rules; (ii) the nature of the impact; and (iii) how to quantify the number of small entities that would be affected by and/or how to quantify the impact of the proposed rules. Comment is specifically requested regarding the number of small entities that are not registered under Section 12 of the Exchange Act that might be affected by the proposed amendments and what effect, if any, they would have on small entities. Should there be different requirements for those companies? Should those companies be required to include the audit committee disclosures in their Forms 10–K or 10–KSB, or in any other disclosure documents? Please describe the nature of any impact and provide empirical data supporting the extent of the impact. Such comments will be considered in the preparation of the Final Regulatory Flexibility Analysis, if the proposed amendments and new rules are adopted, and will be placed in the same public file as comments on the proposed amendments and new rules themselves.

IX. Statutory Bases and Text of Amendments

We are proposing amendments to Rules 10–01 of Regulation S–X and 14a–101 (Schedule 14A) and Item 310 of Regulation S–B, and proposing new Item 306 of Regulations S–K and S–B, under the authority set forth in Sections 2, 13, 14, and 23 of the Exchange Act.

[90] *See generally,* COSO Report, *supra* note 76. In fact, the COSO Report specifically found that a ''regulatory focus on companies with market capitalization in excess of $200 million may fail to target companies with greater risk for financial statement fraud activities.'' *Id.* at 4.

[91] *Id.* at 5.

List of Subjects

17 CFR Part 210

Accountant, Accounting, Reporting and recordkeeping requirements, Securities.

17 CFR Part 228

Reporting and recordkeeping requirements, Securities, Small businesses.

17 CFR Parts 229 and 240

Reporting and recordkeeping requirements, Securities.

Text of Amendments

In accordance with the foregoing, Title 17, Chapter II of the Code of Federal Regulations is proposed to be amended as follows:

PART 210—FORM AND CONTENT OF AND REQUIREMENTS FOR FINANCIAL STATEMENTS, SECURITIES ACT OF 1933, SECURITIES EXCHANGE ACT OF 1934, PUBLIC UTILITY HOLDING COMPANY ACT OF 1935, INVESTMENT COMPANY ACT OF 1940, AND ENERGY POLICY AND CONSERVATION ACT OF 1975

1. The authority citation for part 210 continues to read as follows:

Authority: 15 U.S.C. 77f, 77g, 77h, 77j, 77s, 77z–2, 77aa(25), 77aa(26), 78j–l, 78*l*, 78m, 78n, 78o(d), 78u–5, 78w(a), 78*ll*(d), 79e(b), 79j(a), 79n, 79t(a), 80a–8, 80a–20, 80a–29, 80a–30, 80a–37(a), unless otherwise noted.

2. By amending § 210.10–01 by revising paragraph (d) to read as follows:

§ 210.10–01 Interim financial statements.

* * * * *

(d) *Interim review by independent public accountant.* Prior to filing, interim financial statements included in quarterly reports on Form 10–Q (17 CFR 249.308(a)) must be reviewed by an independent public accountant using professional standards and procedures for conducting such reviews, as established by generally accepted auditing standards, as may be modified or supplemented by the Commission. If, in any filing, the company states that interim financial statements have been reviewed by an independent accountant, a report of the independent accountant on the review must be filed with the interim financial statements.

* * * * *

PART 228—INTEGRATED DISCLOSURE SYSTEM FOR SMALL BUSINESS ISSUERS

3. The authority citation for part 228 continues to read as follows:

Authority: 15 U.S.C. 77e, 77f, 77g, 77h, 77j, 77k, 77s, 77z–2, 77aa(25), 77aa(26), 77ddd, 77eee, 77ggg, 77hhh, 77jjj, 77nnn, 77sss, 78*l*, 78m, 78n, 78o, 78u–5, 78w, 78*ll*, 80a–8, 80a–29, 80a–30, 80a–37, 80b–*ll*, unless otherwise noted.

4. § 228.305 is added and reserved and § 228.306 is added to read as follows:

§ 228.305 [Reserved]

§ 228.306 (Item 306) Audit committee report .

(a) The audit committee must state whether:

(1) The audit committee has reviewed and discussed the audited financial statements with management;

(2) The audit committee has discussed with the independent auditors the matters required to be discussed by SAS 61, as may be modified or supplemented;

(3) The audit committee has received the written disclosures and the letter from the independent accountants required by Independence Standards Board Standard No. 1 (Independence Standards Board Standard No. 1, *Independence Discussions with Audit Committees*), as may be modified or supplemented, and has discussed with the independent accountant the independent accountant's independence; and

(4) Based on the review and discussions referred to in paragraphs (a)(1) through (a)(3) of this Item, anything has come to the attention of the members of the audit committee that caused the audit committee to believe that the audited financial statements included in the company's Annual Report on Form 10–KSB (17 CFR 249.310b) for the year then ended contain an untrue statement of a material fact or omit to state a material fact necessary to make the statements made, in light of the circumstances under which they were made, not misleading.

(b) The name of each member of the company's audit committee (or, in the absence of an audit committee, the board committee performing equivalent functions or the entire board of directors) must appear below the disclosure required by this Item.

(c) The information required by paragraphs (a) and (b) of this Item shall not be deemed to be ''soliciting material,'' or to be ''filed'' with the Commission or subject to Regulation 14A or 14C (17 CFR 240.14a–1 *et seq.* or 240.14c–1 *et seq.*), other than as provided in this Item, or to the liabilities of section 18 of the Exchange Act (15 U.S.C. 78r), except to the extent that the company specifically requests that the information be treated as soliciting material or specifically incorporates it by reference into a document filed under the Securities Act or the Exchange Act.

(d) The information required by paragraphs (a) and (b) of this Item need not be provided in any filings other than a registrant proxy or information statement relating to an annual meeting of security holders at which directors are to be elected (or special meeting or written consents in lieu of such meeting). Such information will not be deemed to be incorporated by reference into any filing under the Securities Act or the Exchange Act, except to the extent that the registrant specifically incorporates it by reference.

5. By amending § 228.310 by revising the introductory text of paragraph (b) to read as follows:

§ 228.310 (Item 310) Financial Statements.

* * * * *

(b) *Interim Financial Statements.* Interim financial statements may be unaudited; however, prior to filing, interim financial statements included in quarterly reports on Form 10–QSB (17 CFR 249.308b) must be reviewed by an independent public accountant using professional standards and procedures for conducting such reviews, as established by generally accepted auditing standards, as may be modified or supplemented by the Commission. If, in any filing, the issuer states that interim financial statements have been reviewed by an independent public accountant, a report of the accountant on the review must be filed with the interim financial statements. Interim financial statements shall include a balance sheet as of the end of the issuer's most recent fiscal quarter and income statements and statements of cash flows for the interim period up to the date of such balance sheet and the comparable period of the preceding fiscal year.

PART 229—STANDARD INSTRUCTIONS FOR FILING FORMS UNDER SECURITIES ACT OF 1933, SECURITIES EXCHANGE ACT OF 1934 AND ENERGY POLICY AND CONSERVATION ACT OF 1975—REGULATION S–K

6. The authority citation for part 229 continues to read in part as follows:

Authority: 15 U.S.C. 77e, 77f, 77g, 77h, 77j, 77k, 77s, 77z–2, 77aa(25), 77aa(26), 77ddd, 77eee, 77ggg, 77hhh, 77iii, 77jjj, 77nnn, 77sss, 78c, 78i, 78j, 78l, 78m, 78n, 78o, 78u–5, 78w, 78ll(d), 79e, 79n, 79t, 80a–8, 80a–29, 80a–30, 80a–37, 80b–11, unless otherwise noted.

* * * * *

7. By adding § 229.306 to read as follows:

§ 229.306 (Item 306) Audit committee report.

(a) The audit committee must state whether:

(1) The audit committee has reviewed and discussed the audited financial statements with management;

(2) The audit committee has discussed with the independent auditors the matters required to be discussed by SAS 61, as may be modified or supplemented;

(3) The audit committee has received the written disclosures and the letter from the independent accountants required by Independence Standards Board Standard No. 1 (Independence Standards Board Standard No. 1, *Independence Discussions with Audit Committees*), as may be modified or supplemented, and has discussed with the independent accountant the independent accountant's independence; and

(4) Based on the review and discussions referred to in paragraphs (a)(1) through (a)(3) of this Item, anything that has come to the attention of the members of the audit committee that caused the audit committee to believe that the audited financial statements included in the company's Annual Report on Form 10–K (17 CFR 249.310) for the year then ended contain an untrue statement of a material fact or omit to state a material fact necessary to make the statements made, in light of the circumstances under which they were made, not misleading.

(b) The name of each member of the company's audit committee (or, in the absence of an audit committee, the board committee performing equivalent functions or the entire board of directors) must appear below the disclosure required by this Item.

(c) The information required by paragraphs (a) and (b) of this Item shall not be deemed to be ''soliciting material,'' or to be ''filed'' with the Commission or subject to Regulation 14A or 14C (17 CFR 240.14a–1 *et seq.* or 240.14c–1 *et seq.*), other than as provided in this Item, or to the liabilities of section 18 of the Exchange Act (15 U.S.C. 78r), except to the extent that the company specifically requests that the information be treated as soliciting material or specifically incorporates it by reference into a document filed under the Securities Act or the Exchange Act.

(d) The information required by paragraphs (a) and (b) of this Item need not be provided in any filings other than a registrant proxy or information statement relating to an annual meeting of security holders at which directors are to be elected (or special meeting or written consents in lieu of such meeting). Such information will not be deemed to be incorporated by reference into any filing under the Securities Act or the Exchange Act, except to the extent that the registrant specifically incorporates it by reference.

PART 240—GENERAL RULES AND REGULATIONS, SECURITIES EXCHANGE ACT OF 1934

8. The authority citation for part 240 continues to read, in part, as follows:

Authority: 15 U.S.C. 77c, 77d, 77g, 77j, 77s, 77z–2, 77eee, 77ggg, 77nnn, 77sss, 77ttt, 78c, 78d, 78f, 78i, 78j, 78j–1, 78k, 78k–1, 78l, 78m, 78n, 78o, 78p, 78q, 78s, 78u–5, 78w, 78x, 78ll(d), 78mm,79q, 79t, 80a–20, 80a–23, 80a–29, 80a–37, 80b–3, 80b–4 and 80b–11, unless otherwise noted.

* * * * *

9. By amending § 240.14a–101 by adding paragraph (3) to Item 7(e) to read as follows:

§ 240.14a–101 Schedule 14A. Information required in proxy statement.

* * * * *

Item 7. *Directors and executive officers.*

* * *

(e) * * *

(3) If the registrant has an audit committee:

(i) Provide the information required by Item 306 of Regulation S–K (17 CFR 229.306).

(ii) State whether the company's audit committee has adopted a written charter.

(iii) Include a copy of the written charter, if any, as an appendix to the company's proxy statement unless a copy has been included as an appendix to the company's proxy statement within the company's past three fiscal years.

(iv)(A) For companies whose securities are listed on the New York Stock Exchange (''NYSE'') or American Stock Exchange (''AMEX'') or quoted on Nasdaq, if the company's Board determines in accordance with the requirements of section 303.02(D) of the NYSE's listing standards, section 121(B)(b)(ii) of the AMEX's listing standards, or section 4310(c)(26)(B)(ii) or 4460(d)(2)(B) of the National Association of Securities Dealers' (''NASD'') listing standards, as applicable and as may be modified or supplemented, to appoint one director to the audit committee who is not independent (as independence is defined in Sections 303.01(B)(2)(a) and (3) of the NYSE's listing standards, section 121(A) of the AMEX's listing standards, or Rule 4200(a)(15) of the NASD's listing standards, as applicable and as may be modified or supplemented), disclose the nature of the relationship that makes that individual not independent and the reasons for the Board's determination. Small business issuers are not required to comply with this paragraph (e)(3)(iv)(A).

(B) For companies, including small business issuers, whose securities are not listed on the NYSE or AMEX or quoted on Nasdaq, disclose whether, if the company has an audit committee, the members are independent. In determining whether a member is independent, the company must use the definition of independence in section 303.01(B)(2)(a) and (3) of the NYSE's listing standards, section 121(A) of the AMEX's listing standards or Rule 4200(a)(15) of the NASD's listing standards, as such sections may be modified or supplemented, and state which of these definitions was used. Whichever definition is chosen must be applied consistently to all members of the audit committee.

(v) The information required by paragraph (e)(3) of this Item shall not be deemed to be ''soliciting material,'' or to be ''filed'' with the Commission or subject to Regulation 14A or 14C (17 CFR 240.14a–1 *et seq.* or 240.14c–1 *et seq.*), other than as provided in this Item, or to the liabilities of Section 18 of the Exchange Act (15 U.S.C. 78r), except to the extent that the company specifically requests that the information be treated as soliciting material or specifically incorporates it by reference into a document filed under the Securities Act or the Exchange Act. Such information will not be deemed to be incorporated by reference into any filing under the Securities Act or the Exchange Act, except to the extent that the registrant specifically incorporates it by reference.

(vi) Investment companies registered under the Investment Company Act of 1940 (15 U.S.C. 80a–1 *et seq.*), other than closed-end investment companies, need not provide the information required by this paragraph (e)(3).

* * * * *

By the Commission.

Dated: October 7, 1999.

Margaret H. McFarland,

Deputy Secretary.

[FR Doc. 99–26791 Filed 10–13–99; 8:45 am]

BILLING CODE 8010–01–P

ENVIRONMENTAL PROTECTION AGENCY

40 CFR Part 52

[Region II Docket No. NJ36–1–196, FRL–6457–2]

Approval and Promulgation of Implementation Plans; New Jersey; Nitrogen Oxides Budget and Allowance Trading Program

AGENCY: Environmental Protection Agency (EPA).

ACTION: Proposed rule.

SUMMARY: The Environmental Protection Agency proposes to conditionally approve New Jersey's State Implementation Plan (SIP) revision for ozone. This SIP revision relates to New Jersey's portion of the Ozone Transport Commission's September 27, 1994 Memorandum of Understanding, which includes a regional nitrogen oxides budget and allowance (NO_X Budget)

trading program that will significantly reduce NO_X emissions generated within the Ozone Transport Region. Today's action proposes a conditional approval of New Jersey's regulations which implement Phase II and Phase III of the NO_X Budget Trading Program to reduce NO_X, and intends to help meet the national ambient air quality standard for ozone. However, if New Jersey corrects the deficiency discussed in today's proposed action between the time of today's proposed action and a final rulemaking action, and the correction is consistent with EPA's findings as discussed below, EPA proposes full approval of New Jersey's NO_X Budget Trading Program.

DATES: EPA must receive written comments on or before November 15, 1999.

ADDRESSES: Address all comments to: Raymond Werner, Acting Chief, Air Programs Branch, Environmental Protection Agency, Region II Office, 290 Broadway, 25th Floor, New York, New York 10007–1866.

Copies of the state submittal and supporting documents are available for inspection during normal business hours, at the following addresses:

Environmental Protection Agency, Region II Office, Air Programs Branch, 290 Broadway, 25th Floor, New York, New York 10007–1866.

New Jersey Department of Environmental Protection, Office of Air Quality Management, Bureau of Air Quality Planning, 401 East State Street, CN418, Trenton, New Jersey 08625.

FOR FURTHER INFORMATION CONTACT: Richard Ruvo, Air Programs Branch, Environmental Protection Agency Region II, 290 Broadway, 25th Floor, New York, New York 10007–1866, (212) 637–4014.

SUPPLEMENTARY INFORMATION:

Overview

The Environmental Protection Agency (EPA) proposes to conditionally approve the New Jersey State Department of Environmental Protection's (New Jersey's) Nitrogen Oxides Budget and Allowance (NO_X Budget) Trading Program.

The following table of contents describes the format for this **SUPPLEMENTARY INFORMATION** section:

EPA's Action
What Action is EPA Proposing Today?
Why is EPA Proposing this Action?
What is a Budget and Allowance Trading Program?
What is EPA's Proposed Condition for Approval?
How can New Jersey Get Full Approval for Their Program?
What Guidance did EPA Use to Evaluate New Jersey's Program?
What is EPA's Evaluation of New Jersey's Program?
New Jersey's NO_X Budget Trading Program
What is the Ozone Transport Commission's Memorandum of Understanding (OTC MOU)?
Which States Signed the OTC MOU?
What Does the OTC MOU Require?
How Did States Meet the OTC MOU?
How Did New Jersey Meet the OTC MOU?
How Does New Jersey's Program Protect the Environment?
How Will New Jersey and EPA Enforce the Program?
When Did New Jersey Propose and Adopt the Program?
When Did New Jersey Submit the Program to EPA and What Did it Include?
What Other Significant Items Relate to New Jersey's Program?
Conclusion
Administrative Requirements

EPA's Action

What Action Is EPA Proposing Today?

EPA proposes to conditionally approve a revision to New Jersey's ozone State Implementation Plan (SIP) which New Jersey submitted to EPA on April 26, 1999. This SIP revision relates to New Jersey's new Subchapter 31 ''NO_X Budget Program'' regulation for New Jersey's NO_X Budget Trading Program.

Why Is EPA Proposing this Action?

EPA is proposing this action to:

- Give you the opportunity to submit written comments on EPA's proposed action, as discussed in the **DATES** and **ADDRESSES** sections.
- Fulfill New Jersey's and EPA's requirements under the Clean Air Act (the Act).
- Make New Jersey's NO_X Budget Trading Program federally-enforceable and available for credit toward the attainment SIP.

What Is a Budget and Allowance Trading Program?

Air emissions trading uses market forces to reduce the overall cost of compliance for sources, such as a power plant, while maintaining emission reductions and environmental benefits. One type of market-based program is an emissions budget and allowance trading program, also commonly referred to as a cap and trade program.

In a budget and allowance trading program, the state or EPA set a regulatory limit, or budget, on mass emissions from a specific group of sources. The state or EPA assigns or allocates allowances to the sources, authorizing emissions up to the level of the budget. Sources may sell or trade allowances with other sources, cost-effectively complying with the budget. The budget limits the total number of allocated allowances. The total effect is to reduce emissions. An example of a budget and allowance trading program is EPA's Acid Rain Program for reducing sulfur dioxide emissions.

What Is EPA's Proposed Condition for Approval?

EPA proposes to condition its approval of New Jersey's NO_X Budget Trading Program on New Jersey including a definition of a violation and of the days of a violation which more fully comports with the other state rules and EPA's guidance.

Originally, New Jersey proposed amendments to Subchapter 3 for the NO_X Budget Trading Program which included defining a violation and for determining the number of days of a violation in order to determine civil and criminal penalties. These provisions stated:

- Each ton of excess emissions is a separate violation
- For purposes of determining the number of days of a violation, each day in the control period (153 days), where there are any excess emissions, constitutes a day in violation, unless the source can demonstrate a lesser number of days, to the State's satisfaction.

However, in response to comments on the proposal, New Jersey reserved these provisions when it adopted Subchapter 31 on June 17, 1998. In the adoption documents, New Jersey said it would propose another amendment to clarify these provisions for defining violations.

The absence of these provisions in New Jersey's adopted NO_X Budget rule creates uncertainty about how the State will define a violation and determine the number of days of a violation should a source not hold enough allowances as of the allowance transfer deadline. The other states in the Ozone Transport Commission (OTC) included similar provisions in their adopted rules. Since the NO_X Budget Program is a regional program, each state rule must be substantively consistent with the other state rules, in order to ensure an allowance in one state has the same value as an allowance in another state.

This area of New Jersey's NO_X Budget Program does not fully satisfy EPA's guidance for providing enforcement mechanisms. New Jersey must revise Subchapter 3 and/or 31 to incorporate the provisions for defining a violation and determining the number of days of a violation should a source not hold enough allowances as of the allowance transfer deadline. Correcting this deficiency will clarify any confusion in how the State defines a violation and

will help to ensure consistency within the regional NO_X Budget Trading Program.

How Can New Jersey Get Full Approval for Their Program?

EPA proposes a conditional approval of New Jersey's NO_X Budget Trading Program due to the deficiency discussed in the ''What is EPA's Proposed Condition for Approval?'' section. EPA informed New Jersey of the deficiency in a July 8, 1999 letter. In a July 29, 1999 letter, New Jersey committed to correcting the deficiency within one year of EPA's final action.

To achieve full approval, New Jersey must correct the deficiency and submit it to EPA within one year of EPA's final action on New Jersey's NO_X Budget Trading Program SIP revision. However, if New Jersey corrects the deficiency between the time of today's proposed action and a final rulemaking action, and the correction is consistent with EPA's findings as discussed earlier, EPA proposes full approval of New Jersey's NO_X Budget Trading Program. EPA will consider all information submitted prior to any final rulemaking action as a supplement or amendment to the April 26, 1999 submittal.

What Guidance Did EPA Use To Evaluate New Jersey's Program?

In 1994, EPA issued Economic Incentive Program (EIP) rules and guidance (40 CFR part 51, subpart U), that outlines requirements for establishing EIPs in cases where the Act requires States adopt EIPs to meet the ozone and carbon monoxide standards in designated nonattainment areas. There is no requirement for New Jersey to submit an EIP. However, since subpart U also contains guidance on the development of voluntary EIPs, New Jersey followed the EIP guidance in the development and submittal of its NO_X Budget Trading Program.

EPA evaluated New Jersey's NO_X Budget Trading Program to determine whether the Program meets the SIP requirements described in section 110 of the Act. EPA also evaluated the Program using the EIP of 1994 as guidance for voluntary EIPs, in coordination with other guidance documents.

What Is EPA's Evaluation of New Jersey's Program?

EPA determined New Jersey's new Subchapter 31 regulation for New Jersey's NO_X Budget Trading Program is consistent with EPA's guidance, except for the deficiency discussed in the ''What is EPA's Proposed Condition for Approval?'' section. Specifically, New Jersey's NO_X Budget Trading Program is consistent with EPA's EIP guidance of 1994.

New Jersey's Subchapter 31 contains provisions for definitions, program applicability, opt-ins, interface with the emission offset program and the open market emissions trading program, annual allowance allocation, claims for incentive allowances, permitting, allowance transfer, allowance banking, early reduction credits, the NO_X Allowance Tracking System, monitoring, recordkeeping, reporting, end-of-season reconciliation, compliance certification, excess emissions deduction, the program audit, and guidance documents incorporated by reference and penalties.

Given the documentation in the SIP submittal and the provisions of New Jersey's NO_X Budget Trading Program, and New Jersey's commitment for a periodic program audit, EPA determined that New Jersey will continue to meet the reasonable further progress and SIP attainment requirements.

A Technical Support Document (TSD), prepared in support of this proposed action, contains the full description of New Jersey's submittal and EPA's evaluation. A copy of the TSD is available upon request from the EPA Regional Office listed in the **ADDRESSES** section.

New Jersey's NO_X Budget Trading Program

What Is the Ozone Transport Commission's Memorandum of Understanding?

The Ozone Transport Commission (OTC) adopted a Memorandum of Understanding (MOU) on September 27, 1994, which committed the signatory states to the development and proposal of a region-wide reduction in NO_X emissions, with one phase of reductions by 1999 and another phase of reductions by 2003. Since the Act required reasonably available control technology (RACT) to reduce NO_X emissions by May of 1995, the OTC MOU refers to the reduction in NO_X emissions by 1999 as Phase II and the reduction in NO_X emissions by 2003 as Phase III.

Which States Signed the OTC MOU?

The OTC states include Maine, New Hampshire, Vermont, Massachusetts, Connecticut, Rhode Island, New York, New Jersey, Pennsylvania, Maryland, Delaware, the northern counties of Virginia and the District of Columbia. All of the OTC jurisdictions, with the exception of the Commonwealth of Virginia, signed the September 27, 1994 MOU.

What Does the OTC MOU Require?

The OTC MOU requires a reduction in ozone season (May 1 to September 30) NO_X emissions from utility and large industrial combustion facilities within the Ozone Transport Region. This reduction furthers the effort to achieve the health-based national ambient air quality standard for ozone. In the MOU, the OTC states agreed to propose regulations for the control of NO_X emissions according to the following guidelines:

- The level of required NO_X reductions is from a 1990 baseline emissions level.
- The reduction would vary by location, or zone, and use a two-phase region-wide trading program.
- The reduction required by May 1, 1999 is the less stringent of the following:

a. The affected facilities in the inner zone will reduce their NO_X emission rate by 65% from the 1990 baseline, or emit NO_X at a rate no greater than 0.20 pounds per million Btu.

b. The affected facilities in the outer zone will reduce their NO_X emission rate by 55% from the 1990 baseline, or emit NO_X at a rate no greater than 0.20 pounds per million Btu.

- The reduction required by May 1, 2003 is the less stringent of the following:

c. The affected facilities in the inner and outer zones will reduce their NO_X emission rate by 75% from the 1990 baseline, or emit NO_X at a rate no greater than 0.15 pounds per million Btu.

d. The affected facilities in the northern zone will reduce their NO_X emission rate by 55% from the 1990 baseline, or emit NO_X at a rate no greater than 0.20 pounds per million Btu.

The inner zone consists of all contiguous moderate and above nonattainment areas in the OTC, except those located in Maine. The outer zone consists of the remainder of the OTC, except the northern zone. The northern zone consists of Maine, Vermont and New Hampshire (except for its moderate and above nonattainment areas) and the northeastern attainment portion of New York.

New Jersey must meet the requirements for the inner zone.

How Did States Meet the OTC MOU?

First, after consideration of the reductions required in the OTC MOU, the OTC States developed a 1990 baseline emission level and the emission budgets for 1999 and 2003. The NO_X Budget Trading Program caps

NO_X emissions in the Ozone Transport Region at 219,000 tons in 1999 and 143,000 tons in 2003, less than half of the 1990 baseline emission level of 490,000 tons.

Then, the OTC charged a Task Force of representatives from the OTC States, organized through the Northeast States for Coordinated Air Use Management (NESCAUM) and the Mid-Atlantic Regional Air Management Association (MARAMA), with the task of developing a model rule to implement the program defined by the OTC MOU. During 1995 and 1996, the NESCAUM/MARAMA NO_X Budget Task Force worked with EPA, as well as representatives from industry, utilities, and environmental groups, and developed a model rule as a template for OTC states to adopt their own rules to implement the OTC MOU. EPA's EIP rules formed the general regulatory framework for the model rule. The OTC issued the model rule on May 1, 1996. The model rule was intended to be used by the OTC states to implement the Phase II reductions called for in the MOU. The model rule does not specifically include the implementation of Phase III.

How Did New Jersey Meet the OTC MOU?

In accordance and consistent with the NESCAUM/MARAMA NO_X Budget model rule issued in May 1996, New Jersey developed their regulation, new Subchapter 31 ''NO_X Budget Program.''

Subchapter 31 includes reduction requirements to implement Phase II and Phase III of the OTC's MOU. The regulation includes provisions for a regional NO_X Budget Trading Program, and establishes procedures for defining NO_X emission allowances for each NO_X control period beginning May 1, 1999 through the NO_X control period ending September 30, 2002 (Phase II), and for each NO_X control period beginning May 1, 2003 and thereafter (Phase III). New Jersey's SIP submittal identifies the budget sources and their initial NO_X allowance allocations.

How Does New Jersey's Program Protect the Environment?

Specific to New Jersey, the NO_X Budget Program will result in NO_X emissions reductions during the ozone season of close to 80% between 1990 and 2003 from applicable sources. In 1990, NO_X emissions from NO_X Budget sources totaled more than 46,500 tons during the ozone season. In 1995, following New Jersey's NO_X RACT rules, emissions of NO_X were reduced to about 21,200 tons during the ozone season. The adopted NO_X Budget Program rules will further reduce NO_X emissions to 17,300 and 8,200 tons during the ozone season in 1999 and 2003, respectively.

In addition to contributing to attainment of the ozone standard, decreases of NO_X emissions will also likely help improve the environment in several important ways. On a national scale, decreases in NO_X emissions will also decrease acid deposition, nitrates in drinking water, excessive nitrogen loadings to aquatic and terrestrial ecosystems, and ambient concentrations of nitrogen dioxide, particulate matter and toxics. On a global scale, decreases in NO_X emissions will, to some degree, reduce greenhouse gases and stratospheric ozone depletion.

How Will New Jersey and EPA Enforce the Program?

Under New Jersey's NO_X Budget Trading Program, New Jersey allocates allowances to budget sources. Each allowance permits a source to emit one ton of NO_X during the seasonal control period. For each ton of NO_X discharged in a given control period, EPA will remove one allowance from the source's allowance account. The source, or any other source will never use this allowance again for compliance. This is known as a retirement of the allowance.

Allowances may be bought, sold, or banked. Unused allowances may be banked for future use, with limitation. Each budget source must comply with the program by demonstrating at the end of each control period that actual emissions do not exceed the amount of allowances held for that period. However, regardless of the number of allowances a source holds, it cannot emit at levels that would violate other federal or state limits, for example, RACT, new source performance standards, or Title IV.

The State and EPA will determine compliance by ensuring that allowances held by a source at the end of each control period meet or exceed the emissions for that source for the given control period. Source owners shall monitor emissions by certified monitoring systems and must report resulting data to EPA. Violations are also possible for not adhering to monitoring, reporting and record keeping requirements. However, as discussed in the ''What is EPA's Proposed Condition for Approval?'' section, the missing provisions in New Jersey's Program limit the ability of New Jersey and EPA to enforce the Program.

Lastly, the federally-enforceable operating permits for budget sources contain the applicable requirements of the NO_X Budget Program.

When Did New Jersey Propose and Adopt the Program?

New Jersey proposed their NO_X Budget Trading Program on September 15, 1997 and held a public hearing on October 17, 1997. New Jersey requested public comments by November 24, 1997. New Jersey adopted the NO_X Budget Trading Program on June 17, 1998 with an operative date of August 16, 1998.

When Did New Jersey Submit the Program to EPA and What Did it Include?

New Jersey submitted its NO_X Budget Trading Program SIP revision to EPA on April 26, 1999. EPA determined the submittal administratively and technically complete on June 18, 1999.

New Jersey's NO_X Budget Trading Program SIP revision included the following elements:

- New Subchapter 31
- Amended Subchapter 3
- Copies of monitoring guidance and energy efficiency protocol to incorporate by reference
- Allowance allocation file for 1999 and explanation of allocation methodology, as supporting information.

What Other Significant Items Relate to New Jersey's Program?

- New Jersey's NO_X Budget Trading Program SIP revision also fulfills the State's commitments to adopt the NO_X Budget Program with respect to the Alternative Ozone Attainment Demonstration submittals sent to EPA on December 31, 1996 and August 31, 1998.
- New Jersey's Subchapter 31 contains NO_X emissions budget and allocation schemes for 1999 through the ozone season of 2002 (Phase II), and for the ozone season of 2003 and beyond (Phase III) of the OTC NO_X Budget Program. Therefore, Subchapter 31 satisfies New Jersey's obligations under the OTC MOU to make specific additional NO_X reductions by May 1, 2003 and continue to make reductions thereafter. Additionally, New Jersey's attainment demonstrations will rely on the NO_X reductions associated with the OTC program in 2003 and beyond to achieve attainment with the one hour ozone standard. In its current form, except for the deficiency discussed in the ''What is EPA's Proposed Condition for Approval?'' section, Subchapter 31 is approvable for 1999, 2000, 2001, 2002 and 2003 and thereafter.

In September 1998, EPA issued the final Regional Transport of Ozone Rule (''NO_X SIP Call'') requiring 22 eastern

States and the District of Columbia to submit SIP's to address the regional transport of ground-level ozone through reductions in NO_X. New Jersey did not submit the April 26, 1999 SIP revision for Subchapter 31 to satisfy the requirements of the NO_X SIP Call. Therefore, in order to meet EPA's NO_X SIP Call, New Jersey will need to submit an additional SIP revision that establishes the NO_X caps for the State during 2003 and beyond, but New Jersey's Phase III limits may be equivalent to the SIP Call limits.

Conclusion

EPA proposes a conditional approval of New Jersey's NO_X Budget Trading Program due to the deficiency discussed in the ''What is EPA's Proposed Condition for Approval?'' section. In a July 29, 1999 letter, New Jersey committed to correcting the deficiency within one year of EPA's final action.

To achieve full approval, New Jersey must correct the deficiency and submit it to EPA within one year of EPA's final action on New Jersey's NO_X Budget Trading Program SIP revision. However, if New Jersey corrects the deficiency between the time of today's proposed action and a final rulemaking action, and the correction is consistent with EPA's findings as discussed earlier, EPA proposes full approval of New Jersey's NO_X Budget Trading Program.

EPA requests public comment on the issues discussed in today's action. EPA will consider all public comments before taking final action. Interested parties may participate in the Federal rulemaking procedure by submitting written comments to the EPA Regional office listed in the **ADDRESSES** section.

Administrative Requirements

Executive Order 12866

The Office of Management and Budget (OMB) has exempted this regulatory action from review under Executive Order (E.O.) 12866, entitled ''Regulatory Planning and Review.''

Executive Order on Federalism

Under E.O. 12875, EPA may not issue a regulation that is not required by statute and that creates a mandate upon a state, local, or tribal government, unless the Federal government provides the funds necessary to pay the direct compliance costs incurred by those governments. If the mandate is unfunded, EPA must provide to the Office of Management and Budget a description of the extent of EPA's prior consultation with representatives of affected state, local, and tribal governments, the nature of their concerns, copies of written communications from the governments, and a statement supporting the need to issue the regulation. In addition, E.O. 12875 requires EPA to develop an effective process permitting elected officials and other representatives of state, local, and tribal governments ''to provide meaningful and timely input in the development of regulatory proposals containing significant unfunded mandates.''

Today's rule does not create a mandate on state, local or tribal governments. The rule does not impose any enforceable duties on these entities. Accordingly, the requirements of section 1(a) of E.O. 12875 do not apply to this rule.

On August 4, 1999, President Clinton issued a new executive order on federalism, Executive Order 13132, [64 FR 43255 (August 10, 1999),] which will take effect on November 2, 1999. In the interim, the current Executive Order 12612, [52 FR 41685 (October 30, 1987),] on federalism still applies. This rule will not have a substantial direct effect on States, on the relationship between the national government and the States, or on the distribution of power and responsibilities among the various levels of government, as specified in Executive Order 12612. The rule affects only one State, and does not alter the relationship or the distribution of power and responsibilities established in the Clean Air Act.

Executive Order 13045

Protection of Children from Environmental Health Risks and Safety Risks (62 FR 19885, April 23, 1997), applies to any rule that: (1) Is determined to be ''economically significant'' as defined under E.O. 12866, and (2) concerns an environmental health or safety risk that EPA has reason to believe may have a disproportionate effect on children. If the regulatory action meets both criteria, the Agency must evaluate the environmental health or safety effects of the planned rule on children, and explain why the planned regulation is preferable to other potentially effective and reasonably feasible alternatives considered by the Agency.

This rule is not subject to E.O. 13045 because it is not an economically significant regulatory action as defined by E.O. 12866, and it does not address environmental health or safety risk that would have a disproportionate effect on children.

Executive Order 13084

Under E.O. 13084, EPA may not issue a regulation that is not required by statute, that significantly or uniquely affects the communities of Indian tribal governments, and that imposes substantial direct compliance costs on those communities, unless the Federal government provides the funds necessary to pay the direct compliance costs incurred by the tribal governments. If the mandate is unfunded, EPA must provide to the Office of Management and Budget, in a separately identified section of the preamble to the rule, a description of the extent of EPA's prior consultation with representatives of affected tribal governments, a summary of the nature of their concerns, and a statement supporting the need to issue the regulation. In addition, E.O. 13084 requires EPA to develop an effective process permitting elected officials and other representatives of Indian tribal governments ''to provide meaningful and timely input in the development of regulatory policies on matters that significantly or uniquely affect their communities.''

Today's rule does not significantly or uniquely affect the communities of Indian tribal governments. Accordingly, the requirements of section 3(b) of E.O. 13084 do not apply to this rule.

Regulatory Flexibility Act

The Regulatory Flexibility Act (RFA) generally requires an agency to conduct a regulatory flexibility analysis of any rule subject to notice and comment rulemaking requirements unless the agency certifies that the rule will not have a significant economic impact on a substantial number of small entities. Small entities include small businesses, small not-for-profit enterprises, and small governmental jurisdictions. This proposed rule will not have a significant impact on a substantial number of small entities because conditional approvals of SIP submittals under section 110 and subchapter I, part D of the Clean Air Act does not create any new requirements but simply approve requirements that the state is already imposing. Therefore, because the Federal SIP approval does not impose any new requirements, I certify that this action will not have a significant economic impact on a substantial number of small entities. Moreover, due to the nature of the Federal-State relationship under the Clean Air Act, preparation of flexibility analysis would constitute Federal inquiry into the economic reasonableness of state action. The Clean Air Act forbids EPA to base its actions concerning SIPs on such grounds. *Union Electric Co.,* v. *U.S. EPA,* 427 U.S. 246, 255–66 (1976); 42 U.S.C. 7410(a)(2).

If the conditional approval is converted to a disapproval under section 110(k), based on the state's failure to meet the commitment, it will not affect any existing state requirements applicable to small entities. Federal disapproval of the state submittal does not affect its state-enforceability. Moreover, EPA's disapproval of the submittal does not impose a new Federal requirement. Therefore, I certify that this disapproval action will not have a significant economic impact on a substantial number of small entities because it does not remove existing requirements nor does it substitute a new federal requirement.

Unfunded Mandates

Under section 202 of the Unfunded Mandates Reform Act of 1995 (''Unfunded Mandates Act''), signed into law on March 22, 1995, EPA must prepare a budgetary impact statement to accompany any proposed or final rule that includes a federal mandate that may result in estimated annual costs to State, local, or tribal governments in the aggregate; or to private sector, of $100 million or more. Under section 205, EPA must select the most cost-effective and least burdensome alternative that achieves the objectives of the rule and is consistent with statutory requirements. Section 203 requires EPA to establish a plan for informing and advising any small governments that may be significantly or uniquely impacted by the rule.

EPA has determined that the proposed conditional approval action does not include a federal mandate that may result in estimated annual costs of $100 million or more to either State, local, or tribal governments in the aggregate, or to the private sector. This federal action approves pre-existing requirements under State or local law, and imposes no new requirements. Accordingly, no additional costs to State, local, or tribal governments, or to the private sector, result from this action.

List of Subjects in 40 CFR Part 52

Environmental protection, Air pollution control, Hydrocarbons, Intergovernmental relations, Nitrogen dioxide, Ozone, Reporting and recordkeeping requirements, Volatile organic compounds.

Authority: 42 U.S.C. 7401 *et seq.*

Dated: September 30, 1999.

William J. Muszynski,

Acting Regional Administrator, Region 2.

[FR Doc. 99–26855 Filed 10–13–99; 8:45 am]

BILLING CODE 6560–50–P

ENVIRONMENTAL PROTECTION AGENCY

40 CFR Part 52

[Region II Docket No. NY33–1–197, FRL–6457–3]

Approval and Promulgation of Implementation Plans; New York; Nitrogen Oxides Budget and Allowance Trading Program

AGENCY: Environmental Protection Agency (EPA).

ACTION: Proposed rule.

SUMMARY: The Environmental Protection Agency proposes approval of New York's State Implementation Plan (SIP) revision for ozone. This SIP revision relates to New York's portion of the Ozone Transport Commission's September 27, 1994 Memorandum of Understanding, which includes a regional nitrogen oxides budget and allowance (NO_X Budget) trading program that will significantly reduce NO_X emissions generated within the Ozone Transport Region. Today's action proposes approval of New York's regulations which implement Phase II of the NO_X Budget Trading Program to reduce NO_X, and intends to help meet the national ambient air quality standard for ozone.

DATES: EPA must receive written comments on or before November 15, 1999.

ADDRESSES: Address all comments to: Raymond Werner, Acting Chief, Air Programs Branch, Environmental Protection Agency, Region II Office, 290 Broadway, 25th Floor, New York, New York 10007–1866.

Copies of the state submittal and supporting documents are available for inspection during normal business hours, at the following addresses:

Environmental Protection Agency, Region II Office, Air Programs Branch, 290 Broadway, 25th Floor, New York, New York 10007–1866.

New York State Department of Environmental Conservation, Division of Air Resources, 50 Wolf Road, Albany, New York 12233.

FOR FURTHER INFORMATION CONTACT: Richard Ruvo, Air Programs Branch, Environmental Protection Agency Region II, 290 Broadway, 25th Floor, New York, New York 10007–1866, (212) 637–4014.

SUPPLEMENTARY INFORMATION:

Overview

The Environmental Protection Agency (EPA) proposes approval of the New York State Department of Environmental Conservation's (New York's) Nitrogen Oxides Budget and Allowance (NO_X Budget) Trading Program.

The following table of contents describes the format for this **SUPPLEMENTARY INFORMATION** section:

EPA's Action
- What Action Is EPA Proposing Today?
- Why is EPA Proposing this Action?
- What is a Budget and Allowance Trading Program?
- What Guidance did EPA Use to Evaluate New York's Program?
- What is EPA's Evaluation of New York's Program?

New York's NO_X Budget Trading Program
- What is the Ozone Transport Commission's Memorandum of Understanding (OTC MOU)?
- Which States Signed the OTC MOU?
- What Does the OTC MOU Require?
- How Did States Meet the OTC MOU?
- How Did New York Meet the OTC MOU?
- How Does New York's Program Protect the Environment?
- How Will New York and EPA Enforce the Program?
- When Did New York Propose and Adopt the Program?
- When Did New York Submit the Program to EPA and What Did it Include?
- What Other Significant Items Relate to New York's Program?

Conclusion

Administrative Requirements

EPA's Action

What Action Is EPA Proposing Today?

EPA proposes approval of a revision to New York's ozone State Implementation Plan (SIP) which New York submitted on April 29, 1999. This SIP revision relates to New York's new Subpart 227–3, ''Pre-2003 Nitrogen Oxides Emissions Budget and Allowance Program'' regulation for New York's NO_X Budget Trading Program.

Why Is EPA Proposing This Action?

EPA is proposing this action to:

- Give you the opportunity to submit written comments on EPA's proposed action, as discussed in the **DATES** and **ADDRESSES** sections
- Fulfill New York's and EPA's requirements under the Clean Air Act (the Act)
- Make New York's NO_X Budget Trading Program federally-enforceable and available for credit toward the attainment SIP.

What Is a Budget and Allowance Trading Program?

Air emissions trading uses market forces to reduce the overall cost of compliance for sources, such as a power plant, while maintaining emission reductions and environmental benefits. One type of market-based program is an

emissions budget and allowance trading program, also commonly referred to as a cap and trade program.

In a budget and allowance trading program, the state or EPA set a regulatory limit, or budget, on mass emissions from a specific group of sources. The state or EPA assigns or allocates allowances to the sources, authorizing emissions up to the level of the budget. Sources may sell or trade allowances with other sources, cost-effectively complying with the budget. The budget limits the total number of allocated allowances. The total effect is to reduce emissions. An example of a budget and allowance trading program is EPA's Acid Rain Program for reducing sulfur dioxide emissions.

What Guidance Did EPA Use To Evaluate New York's Program?

In 1994, EPA issued Economic Incentive Program (EIP) rules and guidance (40 CFR part 51, subpart U), that outlines requirements for establishing EIPs in cases where the Act requires States adopt EIPs to meet the ozone and carbon monoxide standards in designated nonattainment areas. There is no requirement for New York to submit an EIP. However, since subpart U also contains guidance on the development of voluntary EIPs, New York followed the EIP guidance in the development and submittal of its NO_X Budget Trading Program.

EPA evaluated New York's NO_X Budget Trading Program to determine whether the Program meets the SIP requirements described in section 110 of the Act. EPA also evaluated the Program using the EIP of 1994 as guidance for voluntary EIPs, in coordination with other guidance documents.

What Is EPA's Evaluation of New York's Program?

EPA determined New York's new Subpart 227–3 regulation for New York's NO_X Budget Trading Program is consistent with EPA's guidance. Specifically, New York's NO_X Budget Trading Program is consistent with EPA's EIP guidance of 1994.

New York's Subpart 227–3 contains provisions for definitions, program applicability, opt-ins, annual allowance allocation, permitting, allowance transfer, allowance banking, early reduction credits, the NO_X Allowance Tracking System, monitoring, recordkeeping, reporting, end-of-season reconciliation, compliance certification, excess emissions deduction, the program audit, and penalties.

Given the documentation in the SIP submittal and the provisions of New York's NO_X Budget Trading Program, and New York's commitment for a periodic program audit, EPA determined New York will continue to meet the reasonable further progress and SIP attainment requirements.

Also, EPA has determined that the amendments and administrative changes made to Part 200, Subpart 227–1, and Subpart 227–2 are consistent with Subpart 227–3, and EPA's guidance.

A Technical Support Document (TSD), prepared in support of this proposed action, contains the full description of New York's submittal and EPA's evaluation. A copy of the TSD is available upon request from the EPA Regional Office listed in the **ADDRESSES** section.

New York's NO_X Budget Trading Program

What Is the Ozone Transport Commission's Memorandum of Understanding?

The Ozone Transport Commission (OTC) adopted a Memorandum of Understanding (MOU) on September 27, 1994, which committed the signatory states to the development and proposal of a region-wide reduction in NO_X emissions, with one phase of reductions by 1999 and another phase of reductions by 2003. Since the Act required reasonably available control technology (RACT) to reduce NO_X emissions by May of 1995, the OTC MOU refers to the reduction in NO_X emissions by 1999 as Phase II and the reduction in NO_X emissions by 2003 as Phase III.

Which States Signed the OTC MOU?

The OTC states include Maine, New Hampshire, Vermont, Massachusetts, Connecticut, Rhode Island, New York, New Jersey, Pennsylvania, Maryland, Delaware, the northern counties of Virginia and the District of Columbia. All of the OTC jurisdictions, with the exception of the Commonwealth of Virginia, signed the September 27, 1994 MOU.

What Does the OTC MOU Require?

The OTC MOU requires a reduction in ozone season (May 1 to September 30) NO_X emissions from utility and large industrial combustion facilities within the Ozone Transport Region. This reduction furthers the effort to achieve the health-based national ambient air quality standard for ozone. In the MOU, the OTC states agreed to propose regulations for the control of NO_X emissions according to the following guidelines:

- The level of required NO_X reductions is from a 1990 baseline emissions level
- The reduction would vary by location, or zone, and use a two-phase region-wide trading program
- The reduction required by May 1, 1999 is the less stringent of the following:

a. The affected facilities in the inner zone will reduce their NO_X emission rate by 65% from the 1990 baseline, or emit NO_X at a rate no greater than 0.20 pounds per million Btu

b. The affected facilities in the outer zone will reduce their NO_X emission rate by 55% from the 1990 baseline, or emit NO_X at a rate no greater than 0.20 pounds per million Btu

- The reduction required by May 1, 2003 is the less stringent of the following:

c. The affected facilities in the inner and outer zones will reduce their NO_X emission rate by 75% from the 1990 baseline, or emit NO_X at a rate no greater than 0.15 pounds per million Btu

d. The affected facilities in the northern zone will reduce their NO_X emission rate by 55% from the 1990 baseline, or emit NO_X at a rate no greater than 0.20 pounds per million Btu.

The inner zone consists of all contiguous moderate and above nonattainment areas in the OTC, except those located in Maine. The outer zone consists of the remainder of the OTC, except the northern zone. The northern zone consists of Maine, Vermont and New Hampshire (except for its moderate and above nonattainment areas) and the northeastern attainment portion of New York.

New York must meet the requirements for the inner, outer and northern zones.

How Did States Meet the OTC MOU?

First, after consideration of the reductions required in the OTC MOU, the OTC States developed a 1990 baseline emission level and the emission budgets for 1999 and 2003. The NO_X Budget Trading Program caps NO_X emissions in the Ozone Transport Region at 219,000 tons in 1999 and 143,000 tons in 2003, less than half of the 1990 baseline emission level of 490,000 tons.

Then, the OTC charged a Task Force of representatives from the OTC States, organized through the Northeast States for Coordinated Air Use Management (NESCAUM) and the Mid-Atlantic Regional Air Management Association (MARAMA), with the task of developing a model rule to implement the program defined by the OTC MOU. During 1995 and 1996, the NESCAUM/MARAMA NO_X Budget Task Force worked with

EPA, as well as representatives from industry, utilities, and environmental groups, and developed a model rule as a template for OTC states to adopt their own rules to implement the OTC MOU. EPA's EIP rules formed the general regulatory framework for the model rule. The OTC issued the model rule on May 1, 1996. The model rule was intended to be used by the OTC states to implement the Phase II reductions called for in the MOU. The model rule does not specifically include the implementation of Phase III.

How Did New York Meet the OTC MOU?

In accordance and consistent with the NESCAUM/MARAMA NO_X Budget model rule issued in May 1996, New York developed their regulation, new Subpart 227–3 ''Pre-2003 Nitrogen Oxides Emissions Budget and Allowance Program.''

Subpart 227–3 includes reduction requirements to implement Phase II of the OTC's MOU. The regulation includes provisions for a regional NO_X Budget Trading Program, and establishes NO_X emission allowances for each NO_X control period beginning May 1, 1999 through the NO_X control period ending September 30, 2002 (Phase II). New York's SIP submittal identifies the budget sources and their initial NO_X allowance allocations.

How Does New York's Program Protect the Environment?

Specific to New York, the NO_X Budget Program will result in NO_X emissions reductions during the ozone season of 46% between 1990 and 2002 from applicable sources. In 1990, NO_X emissions from NO_X Budget sources totaled more than 82,000 tons during the ozone season. In 1995, following New York's NO_X RACT rules, emissions of NO_X were reduced to about 52,300 tons during the ozone season. The adopted NO_X Budget Program rules will further reduce NO_X emissions to 46,959 tons during the ozone seasons from 1999 through 2002. The NO_X Budget Program accounts for an additional 64 tons per day of NO_X reductions beyond NO_X RACT in 1999 and 76 tons per day in 2002.

In addition to contributing to attainment of the ozone standard, decreases of NO_X emissions will also likely help improve the environment in several important ways. On a national scale, decreases in NO_X emissions will also decrease acid deposition, nitrates in drinking water, excessive nitrogen loadings to aquatic and terrestrial ecosystems, and ambient concentrations of nitrogen dioxide, particulate matter and toxics. On a global scale, decreases in NO_X emissions will, to some degree, reduce greenhouse gases and stratospheric ozone depletion.

How Will New York and EPA Enforce the Program?

Under New York's NO_X Budget Trading Program, New York allocates allowances to budget sources. Each allowance permits a source to emit one ton of NO_X during the seasonal control period. For each ton of NO_X discharged in a given control period, EPA will remove one allowance from the source's allowance account. The source, or any other source will never use this allowance again for compliance. This is known as a retirement of the allowance.

Allowances may be bought, sold, or banked. Unused allowances may be banked for future use, with limitation. Each budget source must comply with the program by demonstrating at the end of each control period that actual emissions do not exceed the amount of allowances held for that period. However, regardless of the number of allowances a source holds, it cannot emit at levels that would violate other federal or state limits, for example, RACT, new source performance standards, or Title IV.

The State and EPA will determine compliance by ensuring that allowances held by a source at the end of each control period meet or exceed the emissions for that source for the given control period. Source owners will monitor emissions by certified monitoring systems and must report resulting data to EPA. Violations are also possible for not adhering to monitoring, reporting and record keeping requirements. Lastly, the federally-enforceable operating permits for budget sources contain the applicable requirements of the NO_X Budget Program.

When Did New York Propose and Adopt the Program?

New York proposed their NO_X Budget Trading Program on September 16, 1998 and held public hearings on November 2 and 4, 1998. New York requested public comments by November 9, 1998. New York adopted the NO_X Budget Trading Program on January 12, 1999 with an effective date of March 5, 1999.

When Did New York Submit the Program to EPA and What Did It Include?

New York submitted its NO_X Budget Trading Program SIP revision to EPA on April 29, 1999. EPA determined the submittal administratively and technically complete on June 18, 1999.

New York's NO_X Budget Trading Program SIP revision included the following elements:

- New Subpart 227–3
- Amended Part 200, Subpart 227–1 and 227–2
- Source List and Allowance Allocation File, as supporting information
- Opt-in application and early reduction credit applications, as supporting information.

What Other Significant Items Relate to New York's Program?

- New York's NO_X Budget Trading Program SIP revision also fulfills the State's commitments to adopt the NO_X Budget Program with respect to the Alternative Ozone Attainment Demonstration submittals sent to EPA on September 4, 1997 and November 27, 1998.
- New York's Subpart 227–3 currently contains the NO_X emissions budget and allocation only for 1999 through the ozone season of 2002, referred to as ''Phase II'' of the NO_X Budget Trading Program.

However, the OTC MOU obligates New York to require its allowance program sources to make specific additional NO_X reductions by May 1, 2003 and continue to make reductions thereafter, i.e., ''Phase III.'' Additionally, New York's attainment demonstrations will rely on the NO_X reductions associated with the OTC program in 2003 and beyond to achieve attainment with the one hour ozone standard.

In the response to comments, January 27, 1999 adoption documents, New York said it remains committed to the OTC MOU Phase III emissions reductions beginning in 2003. New York committed to implementing Phase III in its ''April 1998 SIP submittal'' to EPA. New York commits to implementing NO_X control measures at least as stringent as those called for in Phase III.

In its current form, Subpart 227–3 is approvable for 1999, 2000, 2001, and 2002. However, in order to meet the interstate MOU and for New York to meet its attainment demonstration commitments, New York will need to amend their regulations to establish the NO_X caps in the State during 2003 and beyond.

In September 1998, EPA issued the final Regional Transport of Ozone Rule (''NO_X SIP Call'') requiring 22 eastern States and the District of Columbia to submit SIP's to address the regional transport of ground-level ozone through reductions in NO_X. New York did not submit the April 29, 1999 SIP revision for Subpart 227–3 to satisfy the requirements of the NO_X SIP Call.

Therefore, in order to meet EPA's NO_X SIP Call, New York will need to submit an additional SIP revision that establishes the NO_X caps for the State during 2003 and beyond.

Conclusion

EPA proposes approval of the New York SIP revision for Subpart 227–3, which implements Phase II of the OTC's MOU to reduce NO_X. This SIP revision implements New York's NO_X Budget Trading Program.

EPA requests public comment on the issues discussed in today's action. EPA will consider all public comments before taking final action. Interested parties may participate in the Federal rulemaking procedure by submitting written comments to the EPA Regional office listed in the **ADDRESSES** section.

Administrative Requirements

Executive Order 12866

The Office of Management and Budget (OMB) has exempted this regulatory action from review under Executive Order (E.O.) 12866, entitled ''Regulatory Planning and Review.''

Executive Order on Federalism

Under E.O. 12875, EPA may not issue a regulation that is not required by statute and that creates a mandate upon a state, local, or tribal government, unless the Federal government provides the funds necessary to pay the direct compliance costs incurred by those governments. If the mandate is unfunded, EPA must provide to the Office of Management and Budget a description of the extent of EPA's prior consultation with representatives of affected state, local, and tribal governments, the nature of their concerns, copies of written communications from the governments, and a statement supporting the need to issue the regulation. In addition, E.O. 12875 requires EPA to develop an effective process permitting elected officials and other representatives of state, local, and tribal governments ''to provide meaningful and timely input in the development of regulatory proposals containing significant unfunded mandates.''

Today's rule does not create a mandate on state, local or tribal governments. The rule does not impose any enforceable duties on these entities. Accordingly, the requirements of section 1(a) of E.O. 12875 do not apply to this rule.

On August 4, 1999, President Clinton issued a new executive order on federalism, Executive Order 13132, [64 FR 43255 (August 10, 1999),] which will take effect on November 2, 1999. In the interim, the current Executive Order 12612, [52 FR 41685 (October 30, 1987),] on federalism still applies. This rule will not have a substantial direct effect on States, on the relationship between the national government and the States, or on the distribution of power and responsibilities among the various levels of government, as specified in Executive Order 12612. The rule affects only one State, and does not alter the relationship or the distribution of power and responsibilities established in the Clean Air Act.

Executive Order 13045

Protection of Children from Environmental Health Risks and Safety Risks (62 FR 19885, April 23, 1997), applies to any rule that: (1) Is determined to be ''economically significant'' as defined under E.O. 12866, and (2) concerns an environmental health or safety risk that EPA has reason to believe may have a disproportionate effect on children. If the regulatory action meets both criteria, the Agency must evaluate the environmental health or safety effects of the planned rule on children, and explain why the planned regulation is preferable to other potentially effective and reasonably feasible alternatives considered by the Agency.

This rule is not subject to E.O. 13045 because it is not an economically significant regulatory action as defined by E.O. 12866, and it does not address environmental health or safety risk that would have a disproportionate effect on children.

Executive Order 13084

Under E.O. 13084, EPA may not issue a regulation that is not required by statute, that significantly or uniquely affects the communities of Indian tribal governments, and that imposes substantial direct compliance costs on those communities, unless the Federal government provides the funds necessary to pay the direct compliance costs incurred by the tribal governments. If the mandate is unfunded, EPA must provide to the Office of Management and Budget, in a separately identified section of the preamble to the rule, a description of the extent of EPA's prior consultation with representatives of affected tribal governments, a summary of the nature of their concerns, and a statement supporting the need to issue the regulation. In addition, E.O. 13084 requires EPA to develop an effective process permitting elected officials and other representatives of Indian tribal governments ''to provide meaningful and timely input in the development of regulatory policies on matters that significantly or uniquely affect their communities.''

Today's rule does not significantly or uniquely affect the communities of Indian tribal governments. Accordingly, the requirements of section 3(b) of E.O. 13084 do not apply to this rule.

Regulatory Flexibility Act

The Regulatory Flexibility Act (RFA) generally requires an agency to conduct a regulatory flexibility analysis of any rule subject to notice and comment rulemaking requirements unless the agency certifies that the rule will not have a significant economic impact on a substantial number of small entities. Small entities include small businesses, small not-for-profit enterprises, and small governmental jurisdictions. This proposed rule will not have a significant impact on a substantial number of small entities because SIP approvals under section 110 and subchapter I, part D of the Clean Air Act do not create any new requirements but simply approve requirements that the State is already imposing. Therefore, because the Federal SIP approval does not create any new requirements, I certify that this action will not have a significant economic impact on a substantial number of small entities. Moreover, due to the nature of the Federal-State relationship under the Clean Air Act, preparation of flexibility analysis would constitute Federal inquiry into the economic reasonableness of state action. The Clean Air Act forbids EPA to base its actions concerning SIPs on such grounds. *Union Electric Co.* v. *U.S. EPA*, 427 U.S. 246, 255–66 (1976); 42 U.S.C. 7410(a)(2).

Unfunded Mandates

Under section 202 of the Unfunded Mandates Reform Act of 1995 (''Unfunded Mandates Act''), signed into law on March 22, 1995, EPA must prepare a budgetary impact statement to accompany any proposed or final rule that includes a federal mandate that may result in estimated annual costs to State, local, or tribal governments in the aggregate; or to private sector, of $100 million or more. Under section 205, EPA must select the most cost-effective and least burdensome alternative that achieves the objectives of the rule and is consistent with statutory requirements. Section 203 requires EPA to establish a plan for informing and advising any small governments that may be significantly or uniquely impacted by the rule.

EPA has determined that the proposed approval action does not

include a federal mandate that may result in estimated annual costs of $100 million or more to either State, local, or tribal governments in the aggregate, or to the private sector. This federal action approves pre-existing requirements under State or local law, and imposes no new requirements. Accordingly, no additional costs to State, local, or tribal governments, or to the private sector, result from this action.

List of Subjects in 40 CFR Part 52

Environmental protection, Air pollution control, Hydrocarbons, Intergovernmental relations, Nitrogen dioxide, Ozone, Reporting and recordkeeping requirements, Volatile organic compounds.

Authority: 42 U.S.C. 7401 *et seq.*

Dated: September 30, 1999.

William J. Muszynski,

Acting Regional Administrator, Region 2.

[FR Doc. 99–26856 Filed 10–13–99; 8:45 am]

BILLING CODE 6560–50–U

ENVIRONMENTAL PROTECTION AGENCY

40 CFR Part 271

[FRL–6453–1]

Georgia: Final Authorization of State Hazardous Waste Management Program Revisions

AGENCY: Environmental Protection Agency (EPA).

ACTION: Proposed rule.

SUMMARY: The EPA proposes to grant final authorization to the hazardous waste program revisions submitted by Georgia. In the ''Rules and Regulations'' section of this **Federal Register**, EPA is authorizing the State's program revisions as an immediate final rule without prior proposal because EPA views this action as noncontroversial and anticipates no adverse comments. The Agency has explained the reasons for this authorization in the preamble to the immediate final rule. If EPA does not receive adverse written comments, the immediate final rule will become effective and the Agency will not take further action on this proposal. If EPA receives adverse written comments, EPA will withdraw the immediate final rule and it will not take effect. EPA will then address public comments in a later final rule based on this proposal. EPA may not provide further opportunity for comment. Any parties interested in commenting on this action must do so at this time.

DATES: Written comments must be received on or before November 15, 1999.

ADDRESSES: Mail written comments to Narindar Kumar, Chief, RCRA Programs Branch, Waste Management Division, U.S. Environmental Protection Agency, The Sam Nunn Atlanta Federal Center, 61 Forsyth Street, SW, Atlanta, Georgia 30303–3104; (404) 562–8440. You can examine copies of the materials submitted by Georgia during normal business hours at the following locations: EPA Region 4, Library, The Sam Nunn Atlanta Federal Center, 61 Forsyth Street, SW, Atlanta, Georgia 30303–3104, Phone number: (404) 562–8190; or Georgia Department of Natural Resources, Environmental Protection Division, 205 Butler Street, SE, Atlanta, Georgia 30334, Phone number: (404) 656–2833.

FOR FURTHER INFORMATION CONTACT: Narindar Kumar, Chief, RCRA Programs Branch, Waste Management Division, U.S. Environmental Protection Agency at the above address and phone number.

SUPPLEMENTARY INFORMATION: For additional information, please see the immediate final rule published in the ''Rules and Regulations'' section of this **Federal Register**.

A. Stanley Meiburg,

Acting Regional Administrator, Region 4.

[FR Doc. 99–26192 Filed 10–13–99; 8:45 am]

BILLING CODE 6560–50–P

FEDERAL COMMUNICATIONS COMMISSION

47 CFR Chapter I

Possible Revision or Elimination of Rules

AGENCY: Federal Communications Commission.

ACTION: Review of regulations under the Regulatory Flexibility Act; comment request.

SUMMARY: This document invites members of the public to comment on the Commission's rules to be reviewed pursuant to the Regulatory Flexibility Act of 1980. The purpose of the review is to determine whether the rules, published 1986 through 1989 as contained in the Appendix, should be continued without change, should be amended, or should be rescinded to minimize any significant impact of the rules upon a substantial number of small entities. Upon receipt of comments from the public, comments will be evaluated, and action taken to rescind or amend the Commission's rules, as required.

DATES: Comments may be filed on or before December 10, 1999.

FOR FURTHER INFORMATION CONTACT: Eric Malinen or Helen G. Hillegass, Office of Communications Business Opportunities, Federal Communications Commission, (202) 418–0990.

ADDRESSES: Federal Communications Commission, Office of Secretary, 445 12th Street, SW, Washington, DC 20554.

SUPPLEMENTARY INFORMATION: Each year an opportunity will be created for a review and comment by interested parties on the Commission's rules that may require amendment or rescission. What follows is the entire text of the public notice, including the Appendix.

Public Notice

FCC Seeks Comment Regarding Possible Revision or Elimination of Rules Under the Regulatory Flexibility Act, 5 U.S.C. 610

Released: September 24, 1999.

Comment Period Closes: December 10, 1999.

1. Pursuant to the Regulatory Flexibility Act of 1980, *see* 5 U.S.C. 610, the Federal Communications Commission (FCC) hereby publishes a plan for the review of rules issued by the agency in calendar years 1986, 1987, 1988, and 1989 which have, or might have, a significant economic impact on a substantial number of small entities. The purpose of the review will be to determine whether such rules should be continued without change, or should be amended or rescinded, consistent with the stated objectives of applicable statutes, to minimize any significant economic impact of such rules upon a substantial number of small entities.

2. The accompanying Appendix lists the FCC regulations to be reviewed during the next twelve months. In succeeding years, as here, lists will be published for the review of regulations promulgated ten years preceding the year of review.

3. In reviewing each rule under this plan to minimize the possible significant economic impact on small entities, consistent with the stated objectives of the applicable statutes, the FCC will consider the following factors:

a. The continued need for the rule;

b. The nature of complaints or comments received concerning the rule from the public;

c. The complexity of the rule;

d. The extent to which the rule overlaps, duplicates, or conflicts with other Federal rules, and, to the extent feasible, with State and local governmental rules; and

e. The length of time since the rule has been evaluated or the degree to which technology, economic conditions, or other factors have changed in the area affected by the rule.

4. Appropriate information has been provided for each rule, including a brief description of the rule and the need for and legal basis of the rule. The public is invited to comment on the rules chosen for review by December 10, 1999. All relevant and timely comments will be considered by the FCC before final action is taken in this proceeding. To file formally in this proceeding, participants should file an original and four copies of all comments. Comments should be sent to the Office of the Secretary, Federal Communications Commission, 445 12th Street, SW, Washington, DC 20554. Comments will be available for public inspection during regular business hours in the FCC Reference Center of the Federal Communications Commission, 445 12th Street, SW, Washington, DC 20554.

Federal Communications Commission.

Magalie Roman Salas,

Secretary.

Appendix

List of Rules for Review Pursuant to the Regulatory Flexibility Act of 1980, 5 U.S.C. 610, for 1996, 1997, 1998, 1999. All listed rules are in Title 47 of the Code of Federal Regulations.

TITLE 47 OF THE CODE OF FEDERAL REGULATIONS

PART 0—COMMISSION ORGANIZATION

Subpart C—General Information

Brief Description: This rule describes the procedures to be followed in filing applications or other filings requiring a fee under part 1, subpart G of the Commission's Rules, 47 CFR 1.1101 through 1.1182. The subpart G rules pertain to statutory filing and regulatory fees. The rule here listed elaborates on the procedures, including issues of timing, means, and filing locations, to be used in conjunction with such applications or other filings.

Need: This rule facilitates efficient and uniform filing procedures in the implementation of fee statutes.

Legal Basis: 47 U.S.C. 154(i), 154(j), 303(r).

Section Number and Title:

0.401(b) Location of Commission Offices

PART 1—PRACTICE AND PROCEDURE

Subpart B—Hearing Proceedings

Brief Description: The rules describe how a fee must accompany written appearances filed with the Commission in certain cases designated for hearing, including comparative broadcast proceedings involving applicants for new facilities.

Need: The rules facilitate fee collection procedures for certain fees required by statute.

Legal Basis: 47 U.S.C. 154(i), 154(j), 158(f), 303(r).

Section Number and Title:

1.221(f) Notice of hearing; appearances
1.221(g) Notice of hearing; appearances

Subpart C—Rulemaking Proceedings

Brief Description: This rule permits the Commission, during the course of rulemakings to amend the tables of allotments for FM or TV broadcast stations in order to modify the license or permit of the affected entity to specify a new community of license, under certain circumstances.

Need: The rule permits the above procedure only in instances where the new allotment would be mutually exclusive with the existing allotment. Without the procedure, licensees and permittees might be deterred from seeking improvements to technical facilities that would require a modification of the community of license.

Legal Basis: 47 U.S.C. 154(i), 303(r), 307.

Section Number and Title:

1.420(i) Additional procedures in proceedings for amendment of the FM or TV Tables of Allotments

Subpart E—Complaints, Applications, Tariffs, and Reports Involving Common Carriers

Brief Description: This rule describes requirements for formal complaint proceedings, including content requirements for pleadings and other documents. The rule includes standards for documenting legal and factual sources relied upon, and a requirement that the filing attorney or other filing party be identified.

Need: The rule promotes a more complete record for the effective and efficient disposition of complaints.

Legal Basis: 47 U.S.C. 151, 154(i), 208, 403.

Section Number and Title:

1.720 General pleading requirements

Brief Description: This rule specifies that FCC Form 492 must be used when carriers file reports regarding interstate rates of return, as required by part 65 of the Commission's Rules, 47 CFR part 65.

Need: Use of the specialized form, FCC Form 492, facilitates the collection of data under part 65 of the Commission's rules.

Legal Basis: 47 U.S.C. 154(i), 154(j), 205.

Section Number and Title:

1.795 Reports regarding interstate rates of return

Subpart F—Wireless Radio Services Applications Proceedings

Brief Description: These rules establish the requirements and conditions under which domestic common carrier radio stations may be licensed in the Wireless Radio Services.

Need: These rules are promulgated to ensure the most effective and efficient use of the radio spectrum the Commission regulates. These rules are necessary to ensure that the Commission maintains consistency, fairness, and accuracy in its licensing responsibilities.

Legal Basis: 47 U.S.C. 154, 222, 301, 303, 309, 332.

Section Number and Title:

1.903 Authorization required
1.913 Application forms; electronic and manual filing
1.919 Ownership information
1.923 Content of applications
1.926 Application processing; initial procedures
1.929 Classification of filings as major or minor
1.931(b)(11) Application for special temporary authority
1.933 Public notices
1.945 License grants
1.946 Construction and coverage requirements
1.948 Assignment of authorization or transfer of control, notification of consummation
1.955 Termination of authorizations

Subpart G—Schedule of Statutory Charges and Procedures for Payment

Brief Description: These rules specify that a filing fee will be returned or refunded when the application for new or modified facilities is not timely filed in accordance with the filing window; they also specify the circumstances under which applicants in the Mass Media Services designated for comparative hearings need pay no hearing fee, or are entitled to a refund of the hearing fee.

Need: In implementing statutory requirements for the fee program, these

rules result in equitable treatment to permit a refund where filings have been returned without requiring staff action, and also where a surviving Mass Media Services applicant is immediately grantable.

Legal Basis: 47 U.S.C. 154(i), 158.

Section Number and Title:

1.1113(a)(6) Return or refund of charges

1.1113(b) Return or refund of charges

Brief Description: This rule specifies that reconsideration or review of FCC Fee Section staff action is available only when the applicant has made full and proper fee payment, and the fee payment has not failed while the Commission considers the matter.

Need: The rule facilitates the efficient functioning of the fee program in this context. Without the rule, the failure to include full and proper payment along with the request would needlessly delay the Commission's processes and increase the paperwork burden on the staff.

Legal Basis: 47 U.S.C. 154(i), 158.

Section Number and Title:

1.1118(b) Error claims

Subpart O—Collection of Claims Owed the United States

Brief Description: These rules implement the Debt Collection Improvement Act of 1982, including the use of administrative and salary offsets, reporting of delinquent individual debtors to consumer reporting agencies, the assessment of interest, penalties, administrative and other sanctions against delinquent debtors, the issuance of contracts to private collection services for the recovery of money owed to the United States, and the procedures to be followed in referring delinquent debts to the Department of Treasury for collection by offsets against tax refunds owed to the particular debtor.

Need: These rules implement the Debt Collection Act of 1982.

Legal Basis: 31 U.S.C. 3701, 3711, *et seq.*; 5 U.S.C. 5514.

Section Number and Title:

1.1901 Definitions
1.1902 Exceptions
1.1903 Use of procedures
1.1904 Conformance to law and regulations
1.1905 Other procedures; collection of forfeiture penalties
1.1906 Informal action
1.1907 Return of property
1.1908 Omissions not a defense
1.1911 Demand for payment
1.1912 Collection by administrative offset
1.1913 Administrative offset against amounts payable from Civil Service Retirement and Disability Fund
1.1914 Collection in installments
1.1915 Exploration of compromise
1.1916 Suspending or terminating collection action
1.1917 Referrals to the Department of Justice or the General Accounting Office
1.1918 Use of consumer reporting agencies
1.1919 Contracting for collection services
1.1925 Purpose
1.1926 Scope
1.1927 Notification
1.1928 Hearing
1.1929 Deduction from pay
1.1930 Liquidation from final check or recovery from other payment
1.1931 Non-waiver of rights by payments
1.1932 Refunds
1.1933 Interest, penalties and administrative costs
1.1934 Recovery when paying agency is not creditor agency
1.1935 Obtaining the services of a hearing official
1.1940 Assessment
1.1941 Exemptions
1.1942 Other sanctions
1.1950 Reporting discharged debts to the Internal Revenue Service
1.1951 Offset against tax refunds
1.1952 Interagency requests

PART 2—FREQUENCY ALLOCATIONS AND RADIO TREATY MATTERS; GENERAL RULES AND REGULATIONS

Subpart B—Allocation, Assignment, and Use of Radio Frequencies

Brief Description: These rules display the Table of Frequency Allocations, which sets forth a ''road map'' of the service allocations of radio frequency spectrum throughout the world. The Table of Allocations also indicates how spectrum is allocated among Federal Government users, who are subject to the regulatory jurisdiction of the Department of Commerce's National Telecommunications and Information Administration, and non-Federal users, who are subject to the Commission's jurisdiction. The table further shows the services to which the various spectrum bands are allocated. The precise technical rules governing each service regulated by the Commission, however, are set forth in the several other parts of the Commission's rules.

Need: These rules are promulgated to promote the efficient use of the radio spectrum in order to prevent harmful interference among users of radio frequencies, to ensure safety of life and property, and to promote interoperability among radio frequencies throughout the world.

Legal Basis: 47 U.S.C. 154, 303.

Section Number and Title:

2.100 International regulations in force
2.101 Nomenclature of frequencies
2.102 Assignment of frequencies
2.103 Government use of non-Government frequencies
2.104 International Table of Frequency Allocations
2.105 United States Table of Frequency Allocations
2.106 Table of Frequency Allocations
2.107 Radio astronomy station notification
2.108 Policy regarding the use of the fixed-satellite allocations in the 3.6–3.7, 4.5–4.8, and 5.85–5.925 GHz bands

Subpart K—Importation of Devices Capable of Causing Harmful Interference

Brief Description: These rules update current rules to better accomplish interference prevention from radio-frequency devices and facilitate the filing of FCC Form 740 (Importation) information.

Need: These rules are promulgated to control criteria thereby reducing filing and handling burden on both importers and the government and facilitates conversion to a method of electronic filing of importation information in cooperation with the U.S. Customs Service.

Legal Basis: 47 U.S.C. 154(i), 302, 303(r).

Section Number and Title:

2.1201 Purpose
2.1202 Exclusions
2.1203 General requirement for entry into the U.S.A.
2.1205 Filing of required declaration
2.1207 Examination of imported equipment

PART 15—RADIO FREQUENCY DEVICES

Brief Description: These rules provide the parameters necessary to permit the unlicensed operation of radio frequency devices.

Need: These rules are necessary to promote the efficient use of the radio spectrum by preventing harmful interference to licensed radio services that share the same or nearby spectrum. Such licensed services include broadcast, cellular, safety-of-life communications, U.S. Government operations, and others. The rules specify standards regarding the levels of wanted and unwanted emissions and frequencies of permitted operation.

Legal Basis: 47 U.S.C. 154, 302, 303, 304, 307, 544A.

Section Number and Title:

Subpart A—General

15.1 Scope of this part
15.3 Definitions
15.5 General conditions of operation
15.7 Special temporary authority
15.9 Prohibition against eavesdropping
15.11 Cross reference
15.13 Incidental radiators
15.15 General technical requirements
15.17 Susceptibility to interference
15.19 Labeling requirements
15.21 Information to user
15.23 Home-built devices
15.25 Kits
15.27 Special accessories
15.29 Inspection by the Commission
15.31 Measurement standards
15.32 Test procedures for CPU boards and computer power supplies
15.33 Frequency range of radiated measurements
15.35 Measurement detector functions and bandwidths
15.37 Transition provisions for compliance with the rules

Subpart B—Unintentional Radiators

15.101 Equipment authorization of unintentional radiators
15.102 CPU boards and power supplies used in personal computers
15.103 Exempted devices
15.105 Information to the user
15.107 Conducted limits
15.109 Radiated emission limits
15.111 Antenna power conduction limits for receivers
15.113 Power line carrier systems
15.115 TV interface devices, including cable system terminal devices
15.117 TV broadcast receivers
15.118 Cable ready consumer electronics equipment
15.119 Closed caption decoder requirements for television receivers

Subpart C—Intentional Radiators

15.201 Equipment authorization requirement
15.203 Antenna requirement
15.205 Restricted bands of operation
15.207 Conducted limits
15.209 Radiated emission limits; general requirements
15.211 Tunnel radio systems
15.213 Cable locating equipment
15.214 Cordless telephones
15.215 Additional provisions to the general radiated emission limitations
15.217 Operation in the band 160–190 kHz
15.219 Operation in the band 510–1705 kHz
15.221 Operation in the band 525–1705 kHz
15.223 Operation in the band 1.705–10 MHz
15.225 Operation within the band 13.553–13.567 MHz
15.227 Operation within the band 26.96–27.28 MHz
15.229 Operation within the band 40.66–40.70 MHz
15.231 Periodic operation in the band 40.66–40.70 MHz and above 70 MHz
15.233 Operation within the bands 43.71–44.49 MHz, 46.60–46.98 MHz, 48.75–49.51 MHz and 49.66–50.0 MHz
15.235 Operation within the band 49.82–49.90 MHz
15.237 Operation in the bands 72.0–73.0 MHz, 74.6–74.8 MHz and 75.2–76.0 MHz
15.239 Operation in the band 88–108 MHz
15.243 Operation in the band 890–940 MHz
15.245 Operation within the bands 902–928 MHz, 2435–2465 MHz, 5785–5815 MHz, 10500–10550 MHz, and 24075–24175 MHz
15.247 Operation within the bands 902–928 MHz, 2400–2483.5 MHz, and 5725–5850 MHz
15.249 Operation within the bands 902–928 MHz, 2400–2483.5 MHz, 5725–5875 MHz, and 24.0–24.25 GHz
15.251 Operation within the bands 2.9–3.26 GHz, 3.267–3.332 GHz, 3.339–3.3458 GHz, and 3.358–3.6 GHz

PART 21—DOMESTIC PUBLIC FIXED RADIO SERVICES

Subpart A—General

Brief Description: These rules prescribe filing requirements applicable to all services regulated under part 21.

Need: The purpose of these rules is to distinguish the availability of radio spectrum for domestic communication common carrier and Multipoint Distribution Service.

Legal Basis: 47 U.S.C. 151, 154, 201, 202, 203, 204, 205, 208, 215, 218, 303, 307, 313, 314, 403, 404, 552, 554, 602.

Section Number and Title:

21.1 Scope and authority

Subpart B—Applications and Licenses

Brief Description: These rules prescribe filing requirements of applications and licenses.

Need: These rules provide general filing requirements and procedures of application forms for domestic public fixed radio services. These rules list standard procedures for specific types of forms, specific types of applications, filing fees, and all other instructions applicable to filing for applications and licenses.

Legal Basis: 47 U.S.C. 151, 154, 201, 202, 203, 204, 205, 208, 215, 218, 303, 307, 313, 314, 403, 404, 552, 554, 602.

Section Number and Title:

21.15 Technical content of applications
21.19 Waiver of rules
21.27 Public notice period
21.31 Mutually exclusive applications
21.38 Assignment or transfer of station authorization
21.40 Modification of station license
21.41 Special processing of applications for minor facility modifications
21.42 Certain modifications not requiring prior authorization

Subpart C—Technical Standards

Brief Description: These rules prescribe technical operating standards for stations in the domestic public fixed radio services.

Need: These rules provide technical standards and procedures for station antenna usage and structure, zone restrictions, and all other applicable information.

Legal Basis: 47 U.S.C. 151, 154, 201, 202, 203, 204, 205, 208, 215, 218, 303, 307, 313, 314, 403, 404, 552, 554, 602.

Section Number and Title:

21.100 Frequencies
21.106 Emission limitations
21.107 Transmitter power

Subpart E—Miscellaneous

Brief Description: These rules prescribe miscellaneous procedures applicable to domestic public fixed radio services.

Need: These rules provide answers to specific notices; provide instructions to certain summaries and reports; and provide filing instructions with the Commission.

Legal Basis: 47 U.S.C. 151, 154, 201, 202, 203, 204, 205, 208, 215, 218, 303, 307, 313, 314, 403, 404, 552, 554, 602.

Section Number and Title:

21.303 Discontinuance, reduction or impairment of service

Subpart K—Multipoint Distribution Service

Brief Description: These rules prescribe procedures for Multipoint Distribution Service (MDS) licensees in the domestic public fixed radio services.

Need: These rules are established to provide procedures for common carrier

MDS licensees. These rules supply requirements for cable television and the competitive bidding process; instructions for specific application forms, partitioned service areas, basic trading areas, and all other procedures applicable to MDS.

Legal Basis: 47 U.S.C. 151, 154, 201, 202, 203, 204, 205, 208, 215, 218, 303, 307, 313, 314, 403, 404, 552, 554, 602.

Section Number and Title:

21.910 Special procedures for discontinuance, reduction or impairment of service by common carrier MDS licensees

PART 22—PUBLIC MOBILE SERVICES

Brief Description: These rules establish the requirements and conditions under which domestic common carrier radio stations may be licensed and used in the Public Mobile Radio Services.

Need: These rules are promulgated to ensure the most effective and efficient use of the radio spectrum the Commission regulates. These rules are necessary to ensure that the Commission maintains consistency, fairness, and accuracy in its licensing responsibilities.

Legal Basis: 47 U.S.C. 154, 222, 303, 309, 332.

Section Number and Title:

Subpart A—Scope and Authority

22.3 Authorization required

Subpart B—Licensing Requirements and Procedures

22.107 General application requirements
22.131 Procedures for mutually exclusive applications
22.143 Construction prior to grant of application
22.144 Termination of authorizations
22.150 Standard pre-filing technical coordination procedure

Subpart C—Operational and Technical Requirements

22.351 Channel assignment policy
22.352 Protection from interference
22.353 Blanketing interference
22.367 Wave polarization

Subpart D—Developmental Authorizations

22.411 Developmental authorization of 43 MHz paging transmitters
22.413 Developmental authorization of 72–76 MHz fixed transmitters

Subpart E—Paging and Radiotelephone Service

22.511 Construction period for the Paging and Radiotelephone Service
22.529 Application requirements for the Paging and Radiotelephone Service
22.531 Channels for paging operation
22.535 Effective radiated power limits
22.537 Technical channel assignment criteria
22.559 Paging application requirements
22.561 Channels for one-way or two-way mobile operation
22.563 Provisions of rural radiotelephone service upon request
22.565 Transmitting power limits
22.567 Technical channel assignment criteria
22.589 One-way or two-way application requirements
22.591 Channels for point-to-point operation
22.593 Effective radiated power limits
22.599 Assignment of 72–76 MHz channels
22.601 Assignment of microwave channels
22.603 488–494 MHz fixed service in Hawaii
22.621 Channels for point-to-multipoint operation
22.623 System configuration
22.625 Transmitter locations
22.627 Effective radiated power limits
22.651 470–512 MHz channels for trunked mobile operation
22.653 Eligibility
22.655 Channel usage
22.657 Transmitter locations
22.659 Effective radiated power limits

Subpart F—Rural Radiotelephone Service

22.702 Eligibility
22.709 Rural radiotelephone service application requirements
22.711 Provision of information to applicants
22.713 Construction period for rural radiotelephone stations
22.719 Additional channel policy for rural radiotelephone stations
22.725 Channels for conventional rural radiotelephone stations
22.729 Meteor burst propagation modes
22.757 Channels for basic exchange telephone radio systems

Subpart G—Air-Ground Radiotelephone Service

22.809 Transmitting power limits
22.811 Idle tone
22.815 Construction period for general aviation ground stations
22.873 Construction period for commercial aviation air-ground systems

Subpart H—Cellular Radiotelephone Service

22.901 Cellular service requirements and limitations
22.913 Effective radiated power limits
22.923 Cellular system configuration
22.925 Prohibition on airborne operation of cellular telephones
22.937 Demonstration of financial qualifications
22.946 Service commencement and construction periods for cellular systems

Subpart I—Offshore Radiotelephone Service

22.1035 Construction period
22.1037 Application requirements for offshore stations

PART 32—UNIFORM SYSTEM OF ACCOUNTS FOR TELECOMMUNICATIONS COMPANIES

Brief Description: This rule establishes the Uniform System of Accounts, a financial based system maintained in sufficient detail to facilitate recurrent regulatory decision making without undue reliance on ad hoc information requests and special studies. It also provides a stable platform that accepts different costing methodologies and accommodates improvements to separations and settlements processes.

Need: This rule implements the Uniform System of Accounts.

Legal Basis: 47 U.S.C. 154, 219, 220.

Subpart A—Preface

Section Number and Title:

32.1 Background
32.2 Basis of the accounts
32.3 Authority
32.4 Communications Act

Subpart B—General Instructions

Section Number and Title:

32.11 Classification of companies
32.12 Records
32.13 Accounts—general
32.14 Regulated accounts
32.15 [Reserved.]
32.16 Changes in accounting standards
32.17 Interpretation of accounts
32.18 Waivers
32.19 Address for reports and correspondence
32.20 Numbering convention
32.21 Sequence of accounts
32.22 Comprehensive interperiod tax allocation

32.23 Nonregulated activities
32.24 Compensated absences
32.25 Unusual items and contingent liabilities
32.26 Materiality
32.27 Transactions with affiliates

Subpart C—Instructions For Balance Sheet Accounts

Section Number and Title:

32.101 Structure of the balance sheet accounts
32.102 Nonregulated investments
32.103 Balance sheet accounts for other than regulated-fixed assets to be maintained
32.1120 Cash and equivalents
32.1130 Cash
32.1140 Special cash deposits
32.1150 Working cash advances
32.1160 Temporary investments
32.1180 Telecommunications accounts receivable
32.1181 Accounts receivable allowance—telecommunications
32.1190 Other accounts receivable
32.1191 Accounts receivable allowance—other
32.1200 Notes receivable
32.1201 Notes receivable allowance
32.1210 Interest and dividends receivable
32.1220 Inventories
32.1280 Prepayments
32.1290 Prepaid rents
32.1300 Prepaid taxes
32.1310 Prepaid insurance
32.1320 Prepaid directory expenses
32.1330 Other prepayments
32.1350 Other current assets
32.1401 Investments in affiliated companies
32.1402 Investments in nonaffiliated companies
32.1406 Nonregulated investments
32.1407 Unamortized debt issuance expense
32.1408 Sinking funds
32.1410 Other noncurrent assets
32.1438 Deferred maintenance and retirements
32.1439 Deferred charges
32.1500 Other jurisdictional assets—net
32.2000 Instructions for telecommunications plant accounts
32.2001 Telecommunications plant in service
32.2002 Property held for future telecommunications use
32.2003 Telecommunications plant under construction
32.2005 Telecommunications plant adjustment
32.2006 Nonoperating plant
32.2007 Goodwill
32.2110 Land and support assets
32.2111 Land
32.2112 Motor vehicles
32.2113 Aircraft
32.2114 Special purpose vehicles
32.2115 Garage work equipment
32.2116 Other work equipment
32.2121 Buildings
32.2122 Furniture
32.2123 Office equipment
32.2124 General purpose computers
32.2210 Central office—switching
32.2211 Analog electronic switching
32.2212 Digital electronic switching
32.2215 Electro-mechanical switching
32.2220 Operator systems
32.2230 Central office—transmission
32.2231 Radio systems
32.2232 Circuit equipment
32.2310 Information origination/termination
32.2311 Station apparatus
32.2321 Customer premises wiring
32.2341 Large private branch exchanges
32.2351 Public telephone terminal equipment
32.2362 Other terminal equipment
32.2410 Cable and wire facilities
32.2411 Poles
32.2421 Aerial cable
32.2422 Underground cable
32.2423 Buried cable
32.2424 Submarine cable
32.2425 Deep sea cable
32.2426 Intrabuilding network cable
32.2431 Aerial wire
32.2441 Conduit systems
32.2680 Amortizable tangible assets
32.2681 Capital leases
32.2682 Leasehold improvements
32.2690 Intangibles
32.3000 Instructions for balance sheet accounts—depreciation and amortization
32.3100 Accumulated depreciation
32.3200 Accumulated depreciation—held for future telecommunications use
32.3300 Accumulated depreciation—nonoperating
32.3400 Accumulated amortization—tangible
32.3410 Accumulated amortization—capitalized leases
32.3420 Accumulated amortization—leasehold improvements
32.3500 Accumulated amortization—intangible
32.3600 Accumulated amortization—other
32.4000 Instructions for balance sheet accounts—liabilities and stockholders' equity
32.4010 Account payable
32.4020 Notes payable
32.4030 Advance billing and payments
32.4040 Customers' deposits
32.4050 Current maturities—long-term debt
32.4060 Current maturities—capital leases
32.4070 Income taxes—accrued
32.4080 Other taxes—accrued
32.4100 Net current deferred operating income taxes
32.4110 Net current deferred nonoperating income taxes
32.4120 Other accrued liabilities
32.4130 Other current liabilities
32.4210 Funded debt
32.4220 Premium on long-term debt
32.4230 Discount on long-term debt
32.4240 Reacquired debt
32.4250 Obligations under capital leases
32.4260 Advances from affiliated companies
32.4270 Other long-term debt
32.4310 Other long-term liabilities
32.4320 Unamortized operating investment tax credits—net
32.4330 Unamortized nonoperating investment tax credits—net
32.4340 Net noncurrent deferred operating income taxes
32.4350 Net noncurrent deferred nonoperating income taxes
32.4360 Other deferred credits
32.4370 Other jurisdictional liabilities and deferred credits—net
32.4510 Capital stock
32.4520 Additional paid-in capital
32.4530 Treasury stock
32.4540 Other capital
32.4550 Retained earnings

Subpart D—Instructions for Revenue Accounts

Section Number and Title:

32.4999 General
32.5000 Basic local service revenue
32.5001 Basic area revenue
32.5002 Optional extended area revenue
32.5003 Cellular mobile revenue
32.5004 Other mobile services revenue
32.5010 Public telephone revenue
32.5040 Local private line revenue
32.5050 Customer premises revenue
32.5060 Other local exchange revenue
32.5069 Other local exchange revenue settlements
32.5080 Network access revenue
32.5081 End user revenue
32.5082 Switched access revenue
32.5083 Special access revenue
32.5084 State access revenue
32.5100 Long distance message revenue
32.5110 Unidirectional long distance revenue
32.5111 Long distance inward-only revenue
32.5112 Long distance outward-only revenue
32.5120 Long distance private network revenue
32.5121 Subvoice grade long distance private network revenue

32.5122 Voice grade long distance private network revenue
32.5123 Audio program grade long distance private network revenue
32.5124 Video program grade long distance private network revenue
32.5125 Digital transmission long distance private network revenue
32.5126 Long distance private network switching revenue
32.5128 Other long distance private network revenue
32.5129 Other long distance private network revenue settlements
32.5160 Other long distance revenue
32.5169 Other long distance revenue settlements
32.5200 Miscellaneous revenue
32.5230 Directory revenue
32.5240 Rent revenue
32.5250 Corporate operations revenue
32.5260 Miscellaneous revenue
32.5261 Special billing arrangements revenue
32.5262 Customer operations revenue
32.5263 Plant operations revenue
32.5264 Other incidental regulated revenue
32.5269 Other revenue settlements
32.5270 Carrier billing and collection revenue
32.5280 Nonregulated operating revenue
32.5300 Uncollectible revenue
32.5301 Uncollectible revenue—telecommunications
32.5302 Uncollectible revenue—other

Subpart E—Instructions for Expense Accounts

Section Number and Title:

32.5999 General
32.6110 Network support expenses
32.6112 Motor vehicle expense
32.6113 Aircraft expense
32.6114 Special purpose vehicles expense
32.6115 Garage work equipment expense
32.6116 Other work equipment expense
32.6120 General support expenses
32.6121 Land and building expense
32.6122 Furniture and artworks expense
32.6123 Office equipment expense
32.6124 General purpose computers expense
32.6210 Central office switching expenses
32.6211 Analog electronic expense
32.6212 Digital electronic expense
32.6215 Electro-mechanical expense
32.6220 Operator systems expense
32.6230 Central office transmission expenses
32.6231 Radio systems expense
32.6232 Circuit equipment expense
32.6310 Information origination/termination expenses
32.6311 Station apparatus expense
32.6341 Large private branch exchange expense
32.6351 Public telephone terminal equipment expense
32.6362 Other terminal equipment expense
32.6410 Cable and wire facilities expenses
32.6411 Poles expense
32.6421 Aerial cable expense
32.6422 Underground cable expense
32.6423 Buried cable expense
32.6424 Submarine cable expense
32.6425 Deep sea cable expense
32.6426 Intrabuilding network cable expense
32.6431 Aerial wire expense
32.6441 Conduit systems expense
32.6510 Other property, plant and equipment expenses
32.6511 Property held for future telecommunications use expense
32.6512 Provisioning expense
32.6530 Network operations expenses
32.6531 Power expense
32.6532 Network administration expense
32.6533 Testing expense
32.6534 Plant operations administration expense
32.6535 Engineering expense
32.6540 Access expense
32.6560 Depreciation and amortization expenses
32.6561 Depreciation expense—telecommunications plant in service
32.6562 Depreciation expense—property held for future telecommunications
32.6563 Amortization expense—tangible
32.6564 Amortization expense—intangible
32.6565 Amortization expense—other
32.6610 Marketing
32.6611 Product management
32.6612 Sales
32.6613 Product advertising
32.6620 Services
32.6621 Call completion services
32.6622 Number services
32.6623 Customer services
32.6710 Executive and planning
32.6711 Executive
32.6712 Planning
32.6720 General and administrative
32.6721 Accounting and finance
32.6722 External relations
32.6723 Human resources
32.6724 Information management
32.6725 Legal
32.6726 Procurement
32.6727 Research and development
32.6728 Other general and administrative
32.6790 Provision for uncollectible notes receivable

Subpart F—Instructions for Other Income Accounts

Section Number and Title:

32.6999 General
32.7099 Content of accounts
32.7100 Other operating income and expenses
32.7110 Income from custom work
32.7130 Return from nonregulated use of regulated facilities
32.7140 Gains and losses from foreign exchange
32.7150 Gains and losses from disposition of land and artworks
32.7160 Other operating gains and losses
32.7199 Content of accounts
32.7200 Operating taxes
32.7210 Operating investment tax credits—net
32.7220 Operating Federal income taxes
32.7230 Operating state and local income taxes
32.7240 Operating other taxes
32.7250 Provision for deferred operating income taxes—net
32.7299 Content of accounts
32.7300 Nonoperating income and expense
32.7310 Dividend income
32.7320 Interest income
32.7330 Income from sinking and other funds
32.7340 Allowance for funds used during construction
32.7350 Gains or losses from the disposition of certain property
32.7360 Other nonoperating income
32.7370 Special charges
32.7399 Content of accounts
32.7400 Nonoperating taxes
32.7410 Nonoperating investment tax credits—net
32.7420 Nonoperating Federal income taxes
32.7430 Nonoperating state and local income taxes
32.7440 Nonoperating other taxes
32.7450 Provision for deferred nonoperating income taxes—net
32.7499 Content of accounts
32.7500 Interest and related items
32.7510 Interest on funded debt
32.7520 Interest expense—capital leases
32.7530 Amortization of debt issuance expense
32.7540 Other interest deductions
32.7599 Content of accounts
32.7600 Extraordinary items
32.7610 Extraordinary income credits
32.7620 Extraordinary income charges
32.7630 Current income tax effect of extraordinary items—net

32.7640 Provision for deferred income tax effect of extraordinary items—net
32.7899 Content of accounts
32.7910 Income effect of jurisdictional rate-making differences—net
32.7990 Nonregulated net income

Subpart G—Glossary

Section Number and Title:

32.9000 Glossary of terms

PART 36—JURISDICTIONAL SEPARATIONS PROCEDURES; STANDARD PROCEDURES FOR SEPARATING TELECOMMUNICATIONS PROPERTY COSTS, REVENUES, EXPENSES, TAXES AND RESERVES FOR TELECOMMUNICATIONS COMPANIES

Brief Description: This rule establishes a system of accounting that separates the costs of regulated and nonregulated activities of telephone companies and their affiliates. These measures were implemented to prevent cross subsidization or inaccurate allocations of common costs between regulated and nonregulated activities.

Need: This rule separates the costs of regulated and non-regulated activities of telephone companies.

Legal Basis: Sec. 4; 48 Stat. 1066, as amended; 47 U.S.C. 154. Secs. 219, 220; 48 Stat. 1077 as amended, 1078; 47 U.S.C. 219, 220.

Subpart A—General

Section Number and Title:

36.1 General
36.2 Fundamental principles underlying procedures

Subpart B—Telecommunications Property

Section Number and Title:

36.101 Section arrangement
36.102 General
36.111 General
36.112 Apportionment procedure
36.121 General
36.122 Categories and apportionment procedures
36.123 Operator systems equipment—Category 1
36.124 Tandem switching equipment—Category 2
36.125 Local switching equipment—Category 3
36.126 Circuit equipment—Category 4
36.141 General
36.142 Categories and apportionment procedures
36.151 General
36.152 Categories of Cable and Wire Facilities (C&WF)
36.153 Assignment of Cable and Wire Facilities (C&WF) to categories
36.154 Exchange line Cable and Wire Facilities (C&WF)—Category 1—apportionment procedures
36.155 Wideband and exchange truck (C&WF)—Category 2—apportionment procedures
36.156 Interexchange Cable and Wire Facilities (C&WF)—Category 3—apportionment procedures
36.157 Host/remote message Cable and Wire Facilities (C&WF)—Category 4—apportionment procedures
36.161 Tangible assets—Account 2680
36.162 Intangible assets—Account 2690
36.171 Property held for future telecommunications use—Account 2002; Telecommunications plant under construction—Account 2003; and Telecommunications plant adjustment—Account 2005
36.172 Investment in nonaffiliated companies—Account 1402
36.181 Material and supplies—Account 1220
36.182 Cash working capital
36.191 Equal access equipment

Subpart C—Operating Revenues and Certain Income Accounts

Section Number and Title:

36.201 Section arrangement
36.202 General
36.211 General
36.212 Basic local services revenue—Account 5000
36.213 Network access services revenues
36.214 Long distance message revenue—Account 5100
36.215 Miscellaneous revenue—Account 5200
36.216 Uncollectible revenue—Account 5300
36.221 Other operating income and expenses—Account 7100
36.222 Nonoperating income and expenses—Account 7300
36.223 Interest and related items—Account 7500
36.224 Extraordinary items—Account 7600
36.225 Income effect of jurisdictional ratemaking differences—Account 7910

Subpart D—Operating Expenses and Taxes

Section Number and Title:

36.301 Section arrangement
36.302 General
36.310 General
36.311 Network support expenses—Account 6110; and General support expenses—Account 6120
36.321 Central office expenses—Accounts 6210, 6220, and 6230
36.331 Information origination/termination expenses—Account 6310
36.341 Cable and wire facilities expenses—Account 6410
36.351 General
36.352 Other property plant and equipment expenses—Account 6510
36.353 Network operations expenses—Account 6530
36.354 Access expenses—Account 6540
36.361 Depreciation and amortization expenses—Account 6560
36.371 General
36.372 Marketing—Account 6610
36.373 Services—Account 6620
36.374 Telephone operator services
36.375 Published directory listing
36.376 All other
36.377 Category 1—Local business office expense
36.378 Category 2—Customer services (revenue accounting)
36.379 Message processing expense
36.380 Other billing and collecting expense
36.381 Carrier access charge billing and collecting expense
36.382 Category 3—All other customer services expense
36.391 General
36.392 Executive and planning—Account 6710; and General and administrative—Account 6720
36.411 Operating taxes—Account 7200
36.412 Apportionment procedures
36.421 Equal access expenses

Subpart E—Reserves and Deferrals

Section Number and Title:

36.501 General
36.502 Other jurisdictional assets—Net—Account 1500
36.503 Accumulated depreciation—Account 3100
36.504 Accumulated depreciation—Property held for future telecommunications use—Account 3200
36.505 Accumulated amortization—Tangible—Account 3400; Accumulated amortization—Intangible—Account 3500; and Accumulated amortization—Other—Account 3600
36.506 Net current deferred operating income taxes—Account 4100; Net noncurrent deferred operating income taxes—Account 4340
36.507 Other jurisdictional liabilities and deferred credits—Net—Account 4370

Subpart F—Universal Service Fund

Section Number and Title:

36.601 General

36.611 Submission of information to the National Exchange Carrier Association (NECA)
36.612 Updating information submitted to the National Exchange Carrier Association
36.613 Submission of information by the National Exchange Carrier Association
36.621 Study area total unseparated loop cost
36.622 National and study area average unseparated loop costs
36.631 Expense adjustment
36.641 Transition

Subpart G—Lifeline Connection Assistance Expense Allocation

Section Number and Title:

36.701 General
36.711 Lifeline connection assistance
36.721 Telephone company eligibility for lifeline connection assistance expense allocation
36.731 Submission of information to the National Exchange Carrier Association
36.741 Expense adjustment

PART 43—REPORTS OF COMMUNICATION COMMON CARRIERS AND CERTAIN AFFILIATES

Brief Description: This rule establishes an automated reporting system for the collection of the financial and operating data that the Commission requires to administer its accounting, joint cost, jurisdictional separations, rate base disallowance, and access charge rules.

Need: This rule implements the automated reporting system that aids in financial and operating data collection.

Legal Basis: Sec. 4; 48 Stat. 1066, as amended; 47 U.S.C. 154. Secs. 211, 219; 48 Stat. 1073, 1077, as amended; 47 U.S.C. 211, 219, 220.

Section Number and Title:

43.21(d) Annual reports of carriers and certain affiliates
43.21(e) Annual reports of carriers and certain affiliates

Brief Description: This rule requires all foreign-owned carriers to file annual reports on all common carrier services offered in the United States.

Need: This rule implements the requirement that all foreign-owned carriers file annual reports.

Legal Basis: Sec. 4; 48 Stat. 1066, as amended; 47 U.S.C. 154. Secs. 211, 219; 48 Stat. 1073, 1077, as amended; 47 U.S.C. 211, 219, 220.

Section Number and Title:

43.81 Reports of carriers owned by foreign telecommunications entities

PART 61—TARIFFS

Brief Description: This rule defines terms utilized in part 61.

Need: This rule defines terms utilized in part 61.

Legal Basis: Sec. 4; 48 Stat. 1066, as amended; 47 U.S.C. 154. Sec. 203; 48 Stat. 1070; 47 U.S.C. 203.

Section Number and Description:

61.3 Definitions

Brief Description: This rule requires any publications filed with the Commission be accompanied by a letter of transmittal which explains, among other things, the nature and purpose of the filing.

Need: This rule implements the requirement that a letter of transmittal accompany all publications filed with the Commission.

Legal Basis: Sec. 4, 303; 48 Stat. 1066, as amended, 1082; 47 U.S.C. 154, 303. Sec. 203; 48 Stat. 1070; 47 U.S.C. 203; 5 U.S.C. 552.

Section Number and Description:

61.33 Letters of transmittal

Brief Description: This rule reduces the administrative and regulatory burdens on small telephone companies. Additionally, this rule reduces the frequency of required tariff filings for small companies using historical data, and eliminates the data filing requirements and the liability for automatic refunds.

Need: This rule aids small telephone companies by reducing regulatory burdens.

Legal Basis: Secs. 4, 303; 48 Stat. 1066, 1082, as amended; 47 U.S.C. 154, 303; 5 U.S.C. 552.

Section Number and Title:

61.39 Optional supporting information to be submitted with letters of transmittal for Access Tariff filings effective on or after April 1, 1989, by local exchange carriers serving 50,000 or fewer access lines in a given study area that are described as subset 3 carriers in 69.602

Brief Description: These rules limit the rates dominant carriers may charge, rather than the rates of return they may receive, thereby avoiding unnecessary costs, and forcing investment in efficiency enhancing technology and innovative service approaches in order to earn the greatest levels of return within the applicable rate limitations.

Need: This rule encourages efficiency.

Legal Basis: Sec. 4; 48 Stat. 1066, as amended; 47 U.S.C. 154. Sec. 203; 48 Stat. 1070; 47 U.S.C. 203.

Section Number and Title:

61.41 Price cap requirements generally
61.42 Price cap baskets and service categories
61.43 Annual price cap filings required
61.44 Adjustments to the PCI for Dominant Interexchange Carriers
61.46 Adjustments to the API
61.47 Adjustments to the SBI; pricing bands
61.48 Transition rules for price cap formula calculations
61.49 Supporting information to be submitted with letters of transmittal for tariffs of carriers subject to price cap regulation

Brief Description: This rule requires that every proposed tariff filing bear an effective date and, unless exempted, meet the notice requirement. Subsection (c), specifically, names different notice requirements for those carriers subject to the price cap regulations. Different notice periods are required for these carriers for conformity reasons.

Need: This rule implements notice requirements for every proposed tariff filing.

Legal Basis: Sec. 4; 48 Stat. 1066, as amended; 47 U.S.C. 154. Sec. 203; 48 Stat. 1070; 47 U.S.C. 203.

Section Number and Title:

61.58(c) Notice requirements

PART 63—EXTENSION OF LINES AND DISCONTINUANCE, REDUCTION, OUTAGE AND IMPAIRMENT OF SERVICE BY COMMON CARRIERS; AND GRANTS OF RECOGNIZED PRIVATE OPERATING AGENCY STATUS

Brief Description: This rule establishes that an application under 63.701 shall be submitted in the form specified in 63.53 for applications under 214 of the Communications Act.

Need: This rule provides the format for applications submitted to the Commission.

Legal Basis: 47 U.S.C. 151, 154(i), 154(j), 201, 202, 203, 204, 205, 218, 403, 533.

Section Number and Title:

63.701 Contents of application
63.702 Form

PART 64—MISCELLANEOUS RULES RELATING TO COMMON CARRIERS

Subpart E—Use of Recording Devices by Telephone Companies

Brief Description: This rule provides the conditions under which a conversation may be recorded.

Need: This rule articulates the requirements for a permissible recording of a conversation.

Legal Basis: Secs. 1, 4, 201, 202, 203, 204, 205, 218; 48 Stat. 1064, 1066, 1070, as amended, 1071, 1072, 1077; 47 U.S.C.

151, 154, 201, 202, 204, 205, 218; E.O. 11092 of February 26, 1963.

Section Number and Title:

64.501(b) Recording of telephone conversations with telephone companies

Subpart I—Allocation of Costs

Brief Description: This rule establishes a uniform system of allocation of costs for the purposes of tariffs.

Need: This rule establishes a uniform system of allocation of costs for the purposes of tariffs.

Legal Basis: Secs. 1, 4, 201, 202, 203, 204, 205, 218; 48 Stat. 1064, 1066, 1070, as amended, 1071, 1072, 1077; 47 U.S.C. 151, 154, 201, 202, 204, 205, 218; E.O. 11092 of February 26, 1963.

Section Number and Title:

64.902 Transactions with affiliates

PART 65—INTERSTATE RATE OF RETURN PRESCRIPTION PROCEDURES AND METHODOLOGIES

Subpart C—Exchange Carriers

Brief Description: This rule defines net income and the affect on it by gains and losses in depreciable and nondepreciable property, charitable deductions, and interest related customer deposits.

Need: This rule defines net income for interexchange carriers.

Legal Basis: Secs. 4, 201, 202, 203, 205, 218, 403; 48 Stat. 1066, 1072, 1077, 1094, as amended; 47 U.S.C. 151, 154, 201, 202, 203, 204, 205, 218, 219, 220, 403.

Section Number and Title:

65.450 Net income

Subpart E—Rate of Return Reports

Brief Description: This rule ensures that rate of return reports are filed in a uniform manner and in compliance with the Commission's prescribed methods.

Need: This rule ensures all rate of return reports that come to the Commission are filed in a uniform manner.

Legal Basis: Secs. 4, 201, 202, 203, 205, 218, 403; 48 Stat. 1066, 1072, 1077, 1094, as amended; 47 U.S.C. 154, 201, 202, 203, 205, 218, 403.

Section Number and Title:

65.600 Rate of return reports

Subpart F—Maximum Allowable Rates of Return

Brief Description: These rules set forth the method for determining and enforcing maximum allowable rates of return for the interstate services exchange telephone carriers.

Need: These rules balance the interests of rate-payers and investors by promoting just and reasonable rates without imposing excessive burdens or costs on the carriers or the Commission.

Legal Basis: Secs. 4, 201, 202, 203, 205, 218, 403; 48 Stat. 1066, 1072, 1077, 1094, as amended; 47 U.S.C. 154, 201, 202, 203, 205, 218, 403.

Section Number and Title:

65.700 Determining the maximum allowable rate of return
65.701 Period of review
65.702 Measurement of interstate service earnings

Subpart G—Rate Base

Brief Description: This rule establishes that the rate base consists of the interstate portion of the accounts listed in 65.820 that have been invested in ''plant used'' and useful in the efficient provision of interstate telecommunications services regulated by the Commission, minus any deducted items computed in accordance with 65.830.

Need: This rule establishes the rate base.

Legal Basis: Secs. 4, 201, 202, 203, 205, 218, 403; 48 Stat. 1066, 1072, 1077, 1094, as amended; 47 U.S.C. 151, 154, 201, 202, 203, 204, 205, 218, 219, 220, 403.

Section Number and Title:

65.810 Definitions
65.820 Included items
65.830 Deducted items

PART 68—CONNECTION OF TERMINAL EQUIPMENT TO THE TELEPHONE NETWORK

Subpart A—General

Brief Description: Part 68 of the rules sets forth the technical standards for registration and interconnection to the telephone network of customer provided terminal equipment.

Need: These rules set forth the technical standards for registration and interconnection to the telephone network.

Legal Basis: 47 U.S.C. 151, 154(i), 154(j), 201, 202, 203, 204, 205, 218, 220, 313, 403, 412; 5 U.S.C. 553.

Section Number and Title:

68.2 Scope

Brief Description: This rule allows a waiver of the requirement, that nearly all telephones manufactured in or imported into the United States after August 16, 1989 be hearing aid compatible, where a valid, public interest argument can be identified and compliance is either infeasible or so costly as to make one's product unmarketable.

Need: This rule provides a waiver for telephones being hearing aid compliant.

Legal Basis: Secs. 4, 201, 202, 203, 204, 205, 208, 215, 218, 313, 314, 403, 404, 410, 602; 48 Stat., as amended, 1066, 1070, 1071, 1072, 1073, 1076, 1077, 1087, 1094, 1098, 1102; 47 U.S.C. 151, 154, 201, 202, 203, 204, 205, 208, 215, 218, 220, 313, 314, 403, 404, 410, 412, 602.

Section Number and Title:

68.5 Waivers

Subpart C—Registration Procedures

Brief Description: This rule delineates compliance tests for terminal equipment.

Need: This rule delineates compliance tests for terminal equipment.

Legal Basis: 47 U.S.C. 151, 154(i), 154(j), 201, 202, 203, 204, 205, 218, 220, 313, 403, 412; 5 U.S.C. 553.

Section Number and Title:

68.200(j) Application for equipment registration

Subpart D—Conditions for Registration

Brief Description: This rule defines standards for labeling of telephone equipment.

Need: This rule ensures that the labeling of telephone equipment is done in a uniform manner.

Legal Basis: 47 U.S.C. 151, 154(i), 154(j), 201, 202, 203, 204, 205, 218, 220, 313, 403, 412; 5 U.S.C. 553.

Section Number and Title:

68.300(b)(4) Labeling requirements
68.300(b)(5) Labeling requirements

Brief Description: This rule defines leakage current limits.

Need: This rule establishes acceptable levels of leakage.

Legal Basis: 47 U.S.C. 151, 154(i), 154(j), 201, 202, 203, 204, 205, 218, 220, 313, 403, 412; 5 U.S.C. 553.

Section Number and Title:

68.304(g) Leakage current limitations
Table Note (6) Leakage current limitations

Brief Description: This rule sets maximum power for voice band private lines.

Need: This rule sets maximum power for voice band private lines.

Legal Basis: 47 U.S.C. 151, 154(i), 154(j), 201, 202, 203, 204, 205, 218, 220, 313, 403, 412; 5 U.S.C. 553.

Section Number and Title:

68.308(b)(1)(v) Signal power limitations

68.308(b)(1)(vi) Signal power limitations
68.308(b)(1)(vii) Signal power limitations
68.308(b)(5)(i)(G) Signal power limitations
68.308(b)(5)(i)(H) Signal power limitations
68.308(f) Signal power limitations

Brief Description: This rule dictates maximum time a line can be tied up after an automatic telephone dialing is completed.

Need: This rule ensures that a consumer's line will not be tied up after being automatically dialed.

Legal Basis: 47 U.S.C. 151, 154(i), 154(j), 201, 202, 203, 204, 205, 218, 220, 313, 403, 412; 5 U.S.C. 553.

Section Number and Title:

68.318 Additional limitations

Subpart F—Connectors

Brief Description: These rules provide for uniform standards for the protection of the telephone network from damage caused by the connection of terminal equipment and associated wiring thereto, and for the compatibility of hearing aids and telephones so as to ensure that persons with hearing aids have reasonable access to the telephone network.

Need: These rules provide for uniform standards for the protection of the telephone network from damage caused by the connection of terminal equipment and associated wiring.

Legal Basis: Secs. 4, 5, 303; 48 Stat. 1066, 1068, 1082, as amended; 47 U.S.C. 151, 154, 155, 201, 202, 203, 204, 205, 218, 220, 303, 313, 403, 412; 5 U.S.C. 553.

Section Number and Title:

8.502(a)(3) Configurations
68.502(b)(3) Configurations
68.502(d)(2) Configurations

PART 69—ACCESS CHARGES

Subpart A—General

Brief Description: This rule serves to define key terms utilized with respect to access charges.

Need: This rule defines a number of terms used in the section.

Legal Basis: Secs. 4, 201, 202, 203, 205, 218, 403; 48 Stat. 1066, 1070, 1077, 1094, as amended; 47 U.S.C. 154, 201, 202, 203, 205, 218, 403.

Section Number and Title:

69.2(hh) Definitions
69.2(ii) Definitions
69.2(jj) Definitions
69.2(kk) Definitions
69.2(ll) Definitions
69.2(mm) Definitions

Brief Description: This rule detariffs billing and collection services provided by local exchange carriers to interexchange carriers for interstate services.

Need: This rule deregulates billing and collection services.

Legal Basis: Secs. 4, 201, 202, 203, 205, 218, 403; 48 Stat. 1066, 1070, 1077, 1094, as amended; 47 U.S.C. 154, 201, 202, 203, 205, 218, 403.

Section Number and Title:

69.3(e)(8) Filing of access service tariffs

Brief Description: This rule provides filing standards for advance notice of intention of filing tariffs either as a single carrier or as an association.

Need: This rule provides filing standards for advance notice of intention of filing tariffs either as a single carrier or as an association.

Legal Basis: Secs. 4, 201, 202, 203, 205, 218, 403; 48 Stat. 1066, 1070, 1077, 1094, as amended; 47 U.S.C. 154, 201, 202, 203, 205, 218, 403.

Section Number and Title:

69.3(e)(9) Filing of access service tariffs

Brief Description: This rule ensures consistency between filing of data concerning tariffs between the association and the agency.

Need: This rule ensures consistency of filings between the association and the agency.

Legal Basis: Secs. 4, 201, 202, 203, 205, 218, 403; 48 Stat. 1066, 1070, 1077, 1094, as amended; 47 U.S.C. 154, 201, 202, 203, 205, 218, 403.

Section Number and Title:

69.3(e)(10) Filing of access service tariffs

Brief Description: This rule clarifies the effects of mergers and acquisitions among exchange carriers on the common line pooling status of the involved exchange carriers and the long term and transitional support arrangements.

Need: This rule clarifies the effects of mergers and acquisitions among exchange carriers.

Legal Basis: Secs. 4, 201, 202, 203, 205, 218, 403; 48 Stat. 1066, 1070, 1077, 1094, as amended; 47 U.S.C. 154, 201, 202, 203, 205, 218, 403.

Section Number and Title:

69.3(e)(11) Filing of access service tariffs
69.3(g) Filing of access service tariffs

Brief Description: This rule allows for a filing period twice a year of the access charge tariff.

Need: This rule makes the filing of tariffs easier by allowing twice a year filings.

Legal Basis: Secs. 4, 201, 202, 203, 205, 218, 403; 48 Stat. 1066, 1070, 1077, 1094, as amended; 47 U.S.C. 154, 201, 202, 203, 205, 218, 403.

Section Number and Title:

69.3(f) Filing of access service tariffs

Brief Description: This rule ensures tariffs for access charges include the payments for the elements listed in 69.4(b), the Universal Service Fund and Lifeline Assistance.

Need: This rule ensures that tariffs for access charge payments include the elements listed in 69.4(b).

Legal Basis: Secs. 4, 201, 202, 203, 205, 218, 403; 48 Stat. 1066, 1070, 1077, 1094, as amended; 47 U.S.C. 154, 201, 202, 203, 205, 218, 403.

Section Number and Title:

69.4(c) Charges to be filed

Brief Description: This rule sets forth the scope of interexchange carriers responsible for paying the Universal Service Fund and Lifeline Assistance charges.

Need: This rule sets forth the scope of interexchange carriers responsible for paying the Universal Service Fund and Lifeline Assistance charges.

Legal Basis: Secs. 4, 201, 202, 203, 205, 218, 403; 48 Stat. 1066, 1070, 1077, 1094, as amended; 47 U.S.C. 154, 201, 202, 203, 205, 218, 403.

Section Number and Title:

69.5(d) Persons to be assessed

Subpart B—Computation of Charges

Brief Description: This rule serves to provide price caps for incumbent local exchange carriers that would not otherwise have a price cap.

Need: This rule helps to ensure that the rate consumers pay for service is fair.

Legal Basis: Secs. 4, 201, 202, 203, 205, 218, 403; 48 Stat. 1066, 1070, 1077, 1094, as amended; 47 U.S.C. 154, 201, 202, 203, 205, 218, 403.

Section Number and Title:

69.104(e) End user common line for non-price cap incumbent local exchange carriers
69.104(f) End user common line for non-price cap incumbent local exchange carriers
69.104(g) End user common line for non-price cap incumbent local exchange carriers
69.104(h) End user common line for non-price cap incumbent local exchange carriers
69.104(i) End user common line for non-price cap incumbent local exchange carriers
69.104(m) End user common line for non-price cap incumbent local exchange carriers

Brief Description: This rule provides a standard rate to compute non-premium charges and defines what qualifies as a non-premium charge.

Need: This rule provides a standard rate to compute non-premium charges and defines what qualifies as a non-premium charge.

Legal Basis: Secs. 4, 201, 202, 203, 205, 218, 403; 48 Stat. 1066, 1070, 1077, 1094, as amended; 47 U.S.C. 154, 201, 202, 203, 205, 218, 403.

Section Number and Title:

69.113 Non-premium charges for MTS—WATS equivalent services

Subpart E—Apportionment of Expenses

Brief Description: These rules apportion expenses for the Universal Service Fund, Lifeline Assistance, and other expenses.

Need: These rules apportion expenses for the Universal Service Fund, Lifeline Assistance, and other expenses.

Legal Basis: Secs. 4, 201, 202, 203, 205, 218, 403; 48 Stat. 1066, 1070, 1077, 1094, as amended; 47 U.S.C. 154, 201, 202, 203, 205, 218, 403.

Section Number and Title:

69.411 Other expenses
69.412 Non participating company payments/receipts
69.413 Universal Service Fund expenses

Subpart G—Exchange Carrier Association

Brief Description: These rules delineate the functions of associations.

Need: These rules delineate the functions of associations.

Legal Basis: Secs. 4, 201, 202, 203, 205, 218, 403; 48 Stat. 1066, 1070, 1077, 1094, as amended; 47 U.S.C. 154, 201, 202, 203, 205, 218, 403.

Section Number and Title:

69.603(c) Association functions
69.603(d) Association functions
69.603(e) Association functions
69.603(f) Association functions

Brief Description: This rule establishes the payment of long term support as well as the formula for amount of payment, and the commencement date for transitional support.

Need: This rule ensures that support payments will be made and the starting date for transitional support.

Legal Basis: Secs. 4, 201, 202, 203, 205, 218, 403; 48 Stat. 1066, 1070, 1077, 1094, as amended; 47 U.S.C. 154, 201, 202, 203, 205, 218, 403.

Section Number and Title:

69.612 Long term and transitional support

PART 73—RADIO BROADCAST SERVICES

Subpart A—AM Broadcast Stations

Brief Description: These rules provide for compliance and authorization of AM radio equipment and licenses.

Need: These rules prescribe the filing requirements, application forms and procedures for AM broadcast radio services.

Legal Basis: 47 U.S.C. 154, 303, 334, 336.

Section Number and Title:

73.21 Classes of AM broadcast channels and stations
73.26 Regional channels; Class B and Class D stations
73.44 AM transmission system emission limitations
73.45 AM antenna systems
73.54 Antenna resistance and reactance measurements
73.68 Sampling systems for antenna monitors
73.99 Presunrise service authorization (PSRA) and Postsunset service authorization (PSSA)
73.150 Directional antenna systems
73.182 Engineering standards of allocation
73.190 Engineering charts and related formulas

Subpart B—FM Broadcast Stations

Brief Description: These rules provide for compliance and authorization of FM radio equipment and licenses.

Need: These rules prescribe filing requirements, application forms and procedures for FM broadcast radio services.

Legal Basis: 47 U.S.C. 154, 303, 334, 336.

Section Number and Title:

73.202 Table of Allotments
73.207 Minimum distance separation between stations
73.210 Station classes
73.211 Power and antenna height requirements
73.213 Grandfathered short-spaced stations
73.215 Contour protection for short-spaced assignments
73.311 Field strength contours
73.315 FM transmitter location
73.316 FM antenna systems

Subpart E—Television Broadcast Stations

Brief Description: These rules provide for compliance and authorization of television broadcast equipment and licenses.

Need: These rules prescribe filing requirements, application forms and procedures for television broadcast services.

Legal Basis: 47 U.S.C. 154, 303, 334, 336.

Section Number and Title:

73.610 Minimum distance separations between stations
73.658 Affiliation agreements and network programs practices; territorial exclusivity in non-network program arrangements

Subpart H—Rules Applicable to All Broadcast Stations

Brief Description: These rules provide for compliance and authorization of all broadcast services.

Need: These rules prescribe operating procedures applicable to all broadcast services.

Legal Basis: 47 U.S.C. 154, 303, 334, 336.

Section Number and Title:

73.1015 Truthful written statements and responses to Commission inquires and correspondence
73.1211 Broadcast of lottery information
73.1690 Modification of transmission systems
73.3522 Amendment of applications
73.3523 Dismissal of applications in renewal proceedings
73.3571 Processing of AM broadcast station applications
73.3572 Processing of TV broadcast, low power TV, TV translator and TV booster station applications
73.3580 Local public notice of filing of broadcast applications
73.3588 Dismissal of petitions to deny or withdrawal of informal objections
73.3999 Enforcement of 18 U.S.C. 1464 (restrictions on the transmission of obscene and indecent material)
73.4099 Financial qualifications, certification of
73.4107 FM broadcast assignments, increasing availability of
73.4108 FM transmitter site map submissions
73.4266 Tender offer and proxy statements

PART 74—EXPERIMENTAL RADIO, AUXILIARY, SPECIAL BROADCAST AND OTHER PROGRAM DISTRIBUTIONAL SERVICES

Subpart General—Rules Applicable to All Services in Part 74

Brief Description: These rules prescribe filing requirements applicable to all experimental radio, auxiliary, special broadcast and other program distribution services regulated under part 74.

Need: These rules list filing requirements, application forms and procedures applicable to experimental broadcasting, remote pick-up, aural broadcasting, television auxiliary broadcasting, low power television, instructional television fixed services television stations and FM booster stations.

Legal Basis: 47 U.S.C. 154, 303, 307, 554.

Section Number and Title:

74.2 General definitions
74.15 Station license period

Subpart E—Aural Broadcast Auxiliary Stations

Brief Description: These rules prescribe operating procedures exclusive to aural broadcast auxiliary stations.

Need: These rules provide procedures for aural broadcast studio transmitter link stations, intercity relay stations, aural broadcast microwave booster stations and all other instructions applicable to aural broadcasting stations.

Legal Basis: 47 U.S.C. 154, 303, 307, 554.

Section Number and Title:

74.502 Frequency assignment
74.531 Permissible service

Subpart F—Television Broadcast Auxiliary Stations

Brief Description: These rules prescribe operating procedures exclusive to television broadcast auxiliary stations.

Need: These rules promote a list of band width channels and provide procedures for television pick-up stations, studio-transmitter link stations, television relay stations, television translator relay stations, television broadcast licensees, television microwave booster stations and all other instructions applicable to television auxiliary stations.

Legal Basis: 47 U.S.C. 154, 303, 307, 554.

Section Number and Title:

74.600 Eligibility for license
74.602 Frequency assignment
74.631 Permissible service
74.633 Temporary authorizations
74.637 Emissions and emission limitations
74.643 Interference to geostationary-satellites
74.644 Minimum path lengths for fixed links

Subpart G—Low Power TV, TV Translator, and TV Booster Stations

Brief Description: These rules prescribe operating procedures exclusive to low power television, television translator, and television booster stations.

Need: These rules promote procedures for television broadcast translator stations, primary stations, VHF translator, UHF translator, UHF translator signal boosters, low power television stations, program origination, local origination, television broadcast booster station and all other instructions applicable to low power, translator and booster television stations.

Legal Basis: 47 U.S.C. 154, 303, 307, 554.

Section Number and Title:

74.701 Definitions
74.702 Channel assignments
74.703 Interference
74.731 Purpose and permissible service
74.732 Eligibility and licensing requirements
74.763 Time of operation
74.765 Posting of station and operator licenses
74.769 Copies of rules
74.780 Broadcast regulations applicable to translators, low power, and booster stations
74.783 Station identification
74.784 Rebroadcasts

Subpart H—Low Power Auxiliary Stations

Brief Description: These rules prescribe operating procedures exclusive to low power auxiliary stations.

Need: These rules provide instructions on band width allocation and all other procedures applicable to low power television stations.

Legal Basis: 47 U.S.C. 154, 303, 307, 554.

Section Number and Title:

74.832 Licensing requirements and procedures

Subpart I—Instructional Television Fixed Service

Brief Description: These rules prescribe operating procedures exclusive to instructional television fixed service stations.

Need: These rules promote procedures for instructional television fixed service (ITFS) broadcasting stations, frequencies on fixed broadcast stations, fixed service applications, multi-channel distribution and all other procedures applicable to television fixed service.

Legal Basis: 47 U.S.C. 154, 303, 307, 554.

Section Number and Title:

74.903 Interference
74.913 Selection procedure for mutually exclusive ITFS applications

Subpart L—FM Broadcast Translator Stations and FM Broadcast Booster Stations

Brief Description: These rules prescribe operating procedures exclusive to FM broadcast translator and FM broadcast booster stations.

Need: These rules provide procedures pertaining to transmitting FM signal channels for primary stations, FM radio broadcast stations, and FM booster stations.

Legal Basis: 47 U.S.C. 154, 303, 307, 554.

Section Number and Title:

74.1235 Power limitations and antenna systems
74.1250 Transmitters and associated equipment

PART 76—CABLE TELEVISION SERVICE

Subpart D—Carriage of Television Broadcast Signals

Brief Description: These rules provide for the carriage of television broadcast signals on cable television systems. Subject to the Commission's network nonduplication, syndicated exclusivity and sports broadcasting rules, cable systems must carry the entirety of the program schedule of every local television station carried pursuant to the Commission's mandatory carriage provisions or the retransmission consent provisions. A broadcaster and a cable operator may negotiate for partial carriage of the signal where the station is not eligible for must carry rights, either because of the station's failure to meet the requisite definitions or because the cable system is outside the station's market area.

Need: These rules prescribe requirements and obligations concerning cable television system carriage of television broadcast signals.

Legal Basis: 47 U.S.C. 154.

Section Number and Title:

76.70 Exemption from input selector switch rules

Subpart F—Nonduplication Protection and Syndicated Exclusivity

Brief Description: These rules protect the exclusive rights of television broadcast stations to distribute particular programs. Commercial television station licensees are entitled to protect the network programming that they have contracted for by exercising nonduplication rights against more

distant television broadcast stations carried on a local cable television system that serves more than 1,000 subscribers. With respect to non-network programming, cable systems that serve at least 1,000 subscribers may be required, upon proper notification, to provide syndicated exclusivity protection to broadcasters who have contracted with program suppliers for exclusive exhibition rights to certain programs within specific geographic areas, whether or not the cable system affected is carrying the station requesting this protection.

Need: These rules provide requirements pertaining to the permissible retransmission of broadcast signals by cable television systems and requirements pertaining to the syndicated exclusivity rights of broadcasters.

Legal Basis: 47 U.S.C. 154, 302, 303.

Section Number and Title:

76.92 Network non-duplication; extent of protection
76.93 Parties entitled to network non-duplication protection
76.94 Notification
76.95 Exceptions
76.97 Effective dates
76.151 Syndicated program exclusivity: extent of protection
76.153 Parties entitled to syndicated exclusivity
76.155 Notification
76.156 Exceptions
76.157 Exclusivity contracts
76.158 Indemnification contracts
76.159 Requirements for invocation of protection
76.161 Substitutions
76.163 Effective dates

Subpart K—Technical Standards

Brief Description: These rules provide technical performance standards for the operation of cable television systems to ensure the delivery of satisfactory television signals to cable subscribers. Local franchising authorities are generally authorized to enforce these technical standards through their franchising process.

Need: These rules prescribe technical standards applicable to cable television service.

Legal Basis: 47 U.S.C. 154, 303, 601.

Section Number and Title:

76.605 (Note 1) Technical standards
76.605 (Note 3) Technical standards

PART 78—CABLE TELEVISION RELAY SERVICE

Subpart B—Applications and Licenses

Brief Descriptions: These rules set forth procedures for applying for licenses to operate cable antenna relay service stations. Cable systems use these microwave relay stations to obtain certain signals when it is impractical to use cable delivery. Cable operators may purchase microwave relay service from companies providing such common carrier services, or they may operate their own relay stations licensed by the Commission.

Need: These rules prescribe application and licensing requirements applicable to cable television relay service.

Legal Basis: 47 U.S.C. 154, 303.

Section Number and Title:

78.11(f) Permissible service
78.18(a)(5) Frequency assignments
78.18(a)(6) Frequency assignments
78.18(a)(7) Frequency assignments

Subpart D—Technical Regulations

Brief Description: These rules provide technical standards for the operation of cable antenna relay service (CARS) stations. These rules address transmitter power limitations and bandwidth authorized for use by CARS stations. These rules also address procedures concerning the installation, replacement and repair of CARS station equipment, and procedures for frequency monitoring and measurement and system testing.

Need: These rules prescribe technical requirements applicable to cable television relay service.

Legal Basis: 47 U.S.C. 154, 301, 303.

Section Number and Title Description:

78.103(e) Emissions and emission limitations
78.106 Interferences to geostationary-satellites
78.108 Minimum path lengths for fixed links

PART 80—STATIONS IN THE MARITIME SERVICES

Brief Description: These rules include radio services in the Maritime Mobile Service, the Maritime Mobile-Satellite Service, the Maritime Radiodetermination Service, and stations in the Fixed Service that support maritime operations. Regardless of service, marine stations are either considered to be stations on shipboard or stations on land. A license is required for each land station. Ship stations are licensed by rule (no individual license needed) when they operate only on domestic voyages and are not required by law to carry a radio. Rules concerning domestic marine communications are matched to requirements of the U.S. Coast Guard, which monitors marine distress frequencies continuously in U.S. waters.

Need: These marine radio services rules are promulgated to promote safety and operational activities of nonfederal maritime activities, including U.S. vessels that traverse international waters. The rules also reduce radio interference among radio users by promoting the efficient use of the radio spectrum.

Legal Basis: Secs. 4, 303, 48 Stat. 1064–1068, 1081–1105, as amended; 47 U.S.C. 151–155, 301–609; 3 UST 3450, 3 UST 4726, 12 UST 2377

Section Number and Title:

Subpart A—General Information

80.5 Definitions

Subpart B—Applications and Licenses

80.15 Eligibility for station license
80.19 Standard forms to be used
80.23 Filing of applications

Subpart C—Operating Requirements and Procedures

80.80 Operating controls for ship stations
80.83 Protection from potentially hazardous RF radiation
80.89 Unauthorized transmissions
80.95 Message charges
80.102 Radiotelephone station identification
80.111 Radiotelephone operating procedures for coast stations
80.142 Ships using radiotelegraphy
80.143 Required frequencies for radiotelephony

Subpart D—Operator Requirements

80.153 Coast station operator requirements
80.155 Ship station operator requirements
80.156 Control by operator
80.157 Radio officer defined
80.159 Operator requirements of Title III of the Communications Act and the Safety Convention
80.169 Operators required to adjust transmitters or radar
80.177 When operator license is not required
80.179 Unattended operation

Subpart E—General Technical Standards

80.203 Authorization of transmitters for licensing
80.205 Bandwidths
80.207 Classes of emission
80.209 Transmitter frequency tolerances
80.211 Emission limitations
80.213 Modulation requirements

80.215 Transmitter power
80.217 Suppression of interference aboard ships
80.219 Special requirements for narrow-band direct-printing (NB–DP) equipment
80.221 Special requirements for automatically generating the radiotelephone alarm signal
80.223 Special requirements for survival craft stations
80.225 Requirements for selective calling equipment
80.227 Special requirements for protection from RF radiation

Subpart G—Safety Watch Requirements and Procedures

80.303 Watch on 156.800 MHz (Channel 16)
80.308 Watch required by the Great Lakes Radio Agreement
80.311 Authority for distress transmission
80.313 Frequencies for use in distress
80.327 Urgency signals

Subpart H—Frequencies

80.355 Distress, urgency, safety, call and reply Morse code frequencies
80.357 Morse code working frequencies
80.359 Frequencies for digital selective calling (DSC)
80.363 Frequencies for facsimile
80.369 Distress, urgency, safety, call and reply frequencies
80.371 Public correspondence frequencies
80.373 Private communications frequencies
80.375 Radiodetermination frequencies
80.381 Frequencies for operational fixed stations
80.383 Vessel Traffic Services (VTS) system frequencies
80.385 Frequencies for automated systems
80.387 Frequencies for Alaska fixed stations

Subpart I—Station Documents

80.409 Station logs

Subpart J—Public Coast Stations

80.471 Discontinuance or impairment of service
80.475 Scope of service of the Automated Maritime Telecommunications Systems (AMTS)
80.477 AMTS points of communication

Subpart K—Private Coast Stations and Marine Utility Stations

80.514 Marine VHF frequency coordinating committee(s)

Subpart L—Operational Fixed Stations

80.559 Licensing limitations

Subpart M—Stations in the Radio Determination Service

80.601 Scope of communications
80.603 Assignment and use of frequencies
80.605 U.S. Coast Guard coordination.

Subpart N—Maritime Support Stations

80.655 Use of frequencies

Subpart Q—Compulsory Radiotelegraph Installations for Vessels 1600 Gross Tons

80.825 Radar installation requirements and specifications

Subpart R—Compulsory Radiotelephone Installations for Vessels 300 Gross Tons

80.860 Reserve power supply
80.871 VHF radiotelephone station
80.879 Radar installation requirements and specifications

Subpart S—Compulsory Radiotelephone Installations for Small Passenger Boats

80.911 VHF transmitter

Subpart T—Radiotelephone Installation Required for Vessels on the Great Lakes

80.956 Required frequencies and uses

Subpart U—Radiotelephone Installations Required by the Bridge-to-Bridge Act

80.1019 Antenna radio frequency indicator

Subpart V—Emergency Position Indicating Radio Beacons (EPIRBS)

80.1051 Scope
80.1053 Special requirements for Class A EPIRB stations
80.1055 Special requirements for Class B EPIRB stations
80.1061 Special requirements for 406.025 MHz EPIRBs

Subpart X—Voluntary Radio Installations

80.1185 Supplemental eligibility for mobile-satellite stations
80.1187 Scope of communication
80.1189 Portable ship earth stations

PART 87—AVIATION SERVICES

Brief Description: The Aviation Services consist of three services. (1) The Aeronautical Mobile Service includes aeronautical advisory stations, aeronautical enroute stations, airport control stations, and automatic weather observation stations. (2) The Aeronautical Radionavigation Service includes stations used for navigation, obstruction warning, instrument landing, and measurement of altitude and range. (3) The Aeronautical Fixed Service is a system of fixed stations used for point-to-point communications for aviation safety, navigation, or preparation for flight. The Commission regulates the Aviation Services in cooperation with the Federal Aviation Administration.

Need: These aviation radio services rules are promulgated to promote safety and provide systems of non-governmental use of radio for aeronautical communications, aeronautical radio navigation, and search and rescue operations. The rules also reduce radio interference among radio users by promoting the efficient use of the radio spectrum.

Legal Basis: 48 Stat. 1064–1068, 1081–1105, as amended; 47 U.S.C. 151, 152, 153, 154, 155, 156, 301 through 609.

Section Number and Title:

Subpart A—General Information

87.5 Definitions

Subpart B—Applications and Licenses

87.23 Supplemental information required
87.29 Partial grant of application
87.37 Developmental license

Subpart C—Operating Requirements and Procedures

87.73 Transmitter adjustments and tests
87.77 Availability for inspections
87.103 Posting station license
87.111 Suspension or discontinuance of operation

Subpart D—Technical Requirements

87.131 Power and emissions
87.133 Frequency stability
87.137 Types of emission
87.141 Modulation requirements
87.147 Authorization of equipment

Subpart E—Frequencies

87.173 Frequencies

Subpart F—Aircraft Stations

87.187 Frequencies

Subpart G—Aeronautical Advisory Stations (UNICOMS)

87.217 Frequencies

Subpart H—Aeronautical Multicom Stations

87.237 Scope of service

Subpart I—Aeronautical Enroute and Aeronautical Fixed Stations

87.263 Frequencies
87.265 Administrative communications

Subpart J—Flight Test Stations

87.303 Frequencies
87.305 Frequency coordination

Subpart O—Airport Control Tower Stations

87.417 Scope of service
87.421 Frequencies

Subpart Q—Stations in the Radiodetermination Service

87.475 Frequencies

Subpart R—Civil Air Patrol Stations

87.503 Supplemental eligibility

PART 90—PRIVATE LAND MOBILE RADIO SERVICES

Brief Description: These services allow businesses, local governments, educational institutions, hospitals, service providers and utilities to build their own internal communication systems to meet specialized needs where commercial services are unavailable, insufficient, or too costly. Channels are in the 30–50, 150–170, 220–222, 420–512, 700, 800 and 900 MHz bands. Some channels are shared; others are exclusive. Frequencies are often assigned in pairs for use in two-way communications. The most common use is for dispatch communications; other uses include alerting, monitoring, alarms, and operational communications.

Need: These private land mobile radio services rules are promulgated to promote flexibility to radio users in meeting their communications needs where communications are used as a tool for businesses to provide their products and services more economically.

Legal Basis: Secs. 4, 303; 48 Stat., as amended, 1066, 1082; 47 U.S.C. 154, 303.

Section Number and Title:

Subpart A—General Information:

90.7 Definitions

Subpart B—Public Safety Radio Pool

90.16 Public Safety National Plan
90.20 Public Safety Pool

Subpart C—Industrial/Business Radio Pool

90.33 Scope
90.35 Industrial/Business Pool

Subpart F—Radiolocation Service

90.103 Radiolocation Service

Subpart G—Applications and Authorizations

90.111 Scope
90.119 Application forms
90.125 Who may sign applications
90.127 Submission and filing of applications
90.129 Supplemental information to be routinely submitted with applications
90.135 Modification of license
90.137 Applications for operation at temporary locations
90.139 Commission processing of applications
90.141 Resubmitted applications
90.145 Special temporary authority
90.151 Requests for waiver
90.155 Time in which station must be placed in operation
90.157 Discontinuance of station operation
90.159 Temporary and conditional permits

Subpart H—Policies Governing the Assignment of Frequencies

90.173 Policies governing the assignment of frequencies
90.175 Frequency coordination requirements
90.176 Coordinator notification requirements on frequencies below 512 MHz
90.177 Protection of certain radio receiving locations
90.179 Shared use of radio stations

Subpart I—General Technical Standards

90.201 Scope
90.203 Type acceptance required
90.205 Power and antenna height limits
90.207 Types of emissions
90.209 Bandwidth limitations
90.211 Modulation requirements
90.213 Frequency stability

Subpart J—Non-Voice and Other Specialized Operations

90.235 Secondary fixed signaling operations
90.237 Interim provisions for operation of radioteleprinter and radiofacsimile devices
90.241 Radio call box operations
90.242 Travelers' information stations
90.243 Mobile relay stations

Subpart K—Standards for Special Frequencies or Frequency Bands

90.251 Scope
90.257 Assignment and use of frequencies in the band 72–76 MHz
90.259 Assignment and use of frequencies in the bands 216–220 MHz and 1427–1435 MHz
90.261 Assignment and use of the frequencies in the band 450–470 MHz for fixed operations
90.266 Long distance communications on frequencies below 25 MHz
90.267 Assignment and use of frequencies in the 450–470 MHz band for low power use
90.269 Use of frequencies for self-powered vehicle detectors
90.273 Availability and use of frequencies in the 421–430 MHz band
90.275 Selection and assignment of frequencies in the 421–430 MHz band
90.279 Power limitations applicable to the 421–430 MHz band
90.281 Restrictions on operational fixed stations in the 421–430 MHz band

Subpart L—Authorization in the Band 470–512 MHZ (UHF–TV Sharing)

90.303 Availability of frequencies
90.311 Frequencies

Subpart N—Operating Requirements

90.405 Permissible communications
90.419 Points of communication
90.425 Station identification
90.427 Precautions against unauthorized operation
90.437 Posting station licenses

Subpart O—Transmitter Control

90.463 Transmitter control points
90.465 Control of systems of communication
90.477 Interconnected systems

Subpart P—Paging Operations

90.490 One-way paging operations in the private services
90.492 One-way paging operations in the 806–824/851–869 MHz, 896–901/935–940 MHz bands
90.494 Paging operations on shared channels in the 929–930 MHz band

Subpart S—Regulations Governing Licensing and Use of Frequencies in the 806–824, 851–869, 896–901, and 935–940 MHZ Bands

90.601 Scope
90.603 Eligibility

90.605 Forms to be used
90.607 Supplemental information to be furnished by applicants for facilities under this subpart
90.609 Special limitations on amendment of applications for assignment or transfer of authorizations for radio systems above 800 MHz
90.611 Processing of applications
90.613 Frequencies available
90.615 Spectrum blocks available in the General Category for 800 MHz SMR General Category
90.617 Frequencies in the 809.750–824/854.750–869 MHz and 896–901/935–940 MHz bands available for trunked or conventional system use in non-border areas
90.619 Frequencies available for use in the U.S./Mexico and U.S./Canada border areas
90.621 Selection and assignment of frequencies
90.623 Limitations on the number of frequencies assignable for conventional systems
90.625 Other criteria to be applied in assigning channels for use in conventional systems of communication
90.627 Limitation on the number of frequency pairs that may be assignable for trunked systems and on the number of trunked systems
90.629 Extended implementation schedules
90.631 Trunked systems loading, construction and authorization requirements
90.633 Conventional systems loading requirements
90.635 Limitations on power and antenna height
90.637 Restrictions on operational fixed stations
90.645 Permissible operations
90.647 Station identification
90.651 Supplemental reports required of licensees authorized under this subpart
90.653 Number of systems authorized in a geographical area
90.655 Special licensing requirements for Specialized Mobile Radio systems used to provide service to persons other than the licensee
90.657 Temporary permit

PART 95—PERSONAL RADIO SERVICES

Brief Description: The Personal Radio Services provide the general public with short-range wireless communications for personal activities. There are three established services: the General Mobile Radio Service (GMRS), the Citizens Radio Service, and the Radio Control Radio Service. The GMRS rules permit both personal and business communications and has resulted in a very broad mix of GMRS system licensees: personal users, volunteer public service groups and small and large commercial organizations.

Need: These personal radio services rules are promulgated to promote flexibility of users to take advantage of new technology and equipment.

Legal Basis: Secs. 4, 303; 48 Stat. 1066, 1082, as amended; 47 U.S.C. 154, 303.

Section Number and Title:

Subpart A—General Mobile Radio Service (GMRS)

95.1 The General Mobile Radio Service (GMRS)
95.3 License required
95.5 License eligibility
95.7 Channel sharing
95.25 Land station description
95.29 Channels available
95.39 Considerations near FCC monitoring stations
95.51 Antenna height
95.53 Mobile station communication points
95.57 Mobile relay station communication points
95.71 Applying for a new or modified license
95.73 System licensing
95.75 Basic information
95.77 Additional information for GMRS systems with land stations at four or more locations
95.83 Additional information for stations with antennas higher than normally allowed
95.89 Renewing a license
95.103 Licensee duties
95.113 System records
95.117 Where to contact the FCC
95.121 Transmitting channel
95.129 Station equipment
95.131 Servicing station transmitters
95.133 Modification to station transmitters
95.135 Maximum authorized transmitting power
95.137 Moving a small base station or a small control station
95.139 Adding a small base station or a small control station
95.141 Interconnection prohibition
95.175 Cooperation in sharing channels
95.179 Individuals who may be station operators

Subpart E—Technical Regulations

95.621 GMRS transmitter channel frequencies

PART 101—FIXED MICROWAVE SERVICES

Brief Description: The microwave services are used mostly for fixed point-to-point communications systems and are a mechanism which private organizations such as businesses, educational institutions, utilities and local governments use to satisfy internal communications requirements. These systems offer a convenient and often-times cost-effective alternative to wireline for the transmission of voice, data, video and control signals.

Need: These fixed microwave radio services rules are promulgated to promote flexibility to radio users in meeting their communications needs. For example, private users employ microwave frequencies to operate and control equipment at remote sites, gather data related to customer usage, control traffic signals and obtain toll data from moving vehicles as well as other monitoring functions.

Legal Basis: 47 U.S.C. 154, 303.

Section Number and Title

Subpart A—General

101.3 Definitions

Subpart B—Applications and Licenses

101.13 Application forms and requirements for private operational fixed stations
101.19 General application rules
101.57 Modification of station license
101.63 Period of construction; certification of completion of construction

Subpart C—Technical Standards

101.101 Frequency availability
101.105 Interference protection criteria
101.107 Frequency tolerance
101.109 Bandwidth
101.113 Transmitter power limitations
101.115 Directional antennas
101.123 Quiet zones and Arecibo Coordination Zone
101.135 Shared use of radio stations and the offering of private carrier service
101.143 Minimum path length requirements
101.145 Interference to geostationary-satellites
101.147 Frequency assignments
101.149 Special requirements for operation in the band 38,600–40,000 MHz

Subpart H—Private Operational Fixed Point-to-Point Microwave Service

101.601 Eligibility

101.603 Permissible communications

[FR Doc. 99–26593 Filed 10–13–99; 8:45 am]

BILLING CODE 6712–01–P

DEPARTMENT OF COMMERCE

National Oceanic and Atmospheric Administration

50 CFR Part 648

[I.D. 092799B]

Fisheries of the Northeastern United States; Petition for Rulemaking for Seasonal Area Closures, Bycatch Quotas, and Related Measures to Reduce Scup Bycatch

AGENCY: National Marine Fisheries Service (NMFS), National Oceanic and Atmospheric Administration (NOAA), Commerce.

ACTION: Notice of receipt of petition for rulemaking; request for comments.

SUMMARY: NMFS announces receipt of, and requests public comment on, an amended petition for rulemaking to: Reduce scup bycatch through seasonal area closures and a bycatch quota; monitor the *Loligo* fishery through a vessel monitoring system (VMS) and observers; and develop new gear designs. The Natural Resources Defense Council, the Environmental Defense Fund, the Center for Marine Conservation, the National Audubon Society, and the American Oceans Campaign (Petitioners) have petitioned NMFS and the Mid-Atlantic Fishery Management Council (Council) to implement these measures beginning November 1999, to reduce the amount of scup caught incidentally in the *Loligo* squid fishery.

DATES: Comments on the amended petition are requested on or before November 15, 1999.

ADDRESSES: Copies of the amended petition for rulemaking are available upon request from Gary C. Matlock, Ph.D., Director, Office of Sustainable Fisheries, NMFS, 1315 East-West Highway, Silver Spring, MD 20910. Comments on the amended petition should be directed to Dr. Gary C. Matlock at the above address. Please mark the outside of the envelope ''Scup Petition for Rulemaking.''

FOR FURTHER INFORMATION CONTACT: Mark R. Millikin, 301–713–2341.

SUPPLEMENTARY INFORMATION: The fisheries affected by this petition for rulemaking and the petition's amendment are primarily the scup (or porgy, *Stenotomus chrysops*) fishery, which is managed jointly by the Council and the Atlantic States Marine Fisheries Commission under the Summer Flounder, Scup, and Black Sea Bass Fishery Management Plan (FMP) and the *Loligo* squid fishery, which is managed by the Council under the Atlantic Mackerel, Squid, and Butterfish FMP. The Secretary of Commerce has management authority for these species in the exclusive economic zone (EEZ) under the Magnuson-Stevens Fishery Conservation and Management Act (Magnuson-Stevens Act). The management unit for the scup fishery is scup in the U.S. waters of the Atlantic Ocean from 35°15.3' N. lat., the latitude of Cape Hatteras Light, N.C., northward to the U.S.-Canadian border. Regulations governing the scup fishery in the EEZ are found at 50 CFR part 648, subparts A and H. Regulations governing the *Loligo* squid fishery in the EEZ are found at 50 CFR part 648, subparts A and B.

The Petitioners assert that incidentally-caught juvenile scup are discarded in several small mesh fisheries, in particular the *Loligo* squid fishery. Discarded scup is ''bycatch,'' according to the Magnuson-Stevens Act, because it is not landed and sold or kept for personal use. For the commercial fishery, the FMP requires the discard of scup: (1) smaller than a minimum size of 9 inches (22.9 cm), and (2) when the amount of scup on board exceeds the poundage threshold requiring a minimum mesh size in the codend of the net (either 100 or 200 lb (45.4 or 90.7 kg), depending on the season).

The Petitioners contend that because bycatch in small-mesh fisheries is a significant problem, management of the directed scup fishery alone is inadequate to rebuild the overfished scup stock. In addition, the Petitioners note that NMFS recently partially disapproved Amendment 12 to the FMP because it failed to address adequately the bycatch issue. Consequently, the Petitioners argue, ''there are no legally sufficient measures in place to protect the scup from this major source of mortality.''

Thus, in order to protect the scup stock, the Petitioners proposed two different actions (either one or both) to be implemented in 1999, and further actions to be implemented in 2000 and beyond. For 1999, the Petitioners proposed (a) a closure of the *Loligo* fishery in NMFS Northeast Statistical Area 613 (area 613) for the Winter II (November-December) season, (b) the imposition of a scup bycatch quota throughout the *Loligo* management unit for the Winter II season, or (c) both options (a) and (b). The Petitioners note that combining the two management measures could eliminate ''hotspots'' of discards and protect scup from being discarded on *Loligo* trips redirected into other open areas.

Since submitting their original petition for rulemaking, the Petitioners amended their request based upon new information. The Petitioners reference an analysis of the 1997 and 1998 vessel trip report data conducted by Council staff for presentation to the FMP's Scup Monitoring Committee. These data showed high scup discards in statistical areas 537 and 539 in the *Loligo* fishery during the Winter II (November-December) season, as well as in area 613. Further, the data showed high scup discard rates in statistical areas 616 and 622 for the *Loligo* fishery during the Winter I (January-April) season. These areas were included in the Monitoring Committee's August 1999 recommendations for area closures of the *Loligo* fishery to prevent bycatch of scup. Since the Council did not recommend closure of those areas to *Loligo* fishing, the Petitioners have requested in their amended petition immediate implementation of the Monitoring Committee's recommendation in order to reduce scup bycatch. The Petitioners also request that the above measures (time/area closures, bycatch quota, or both) be part of the specifications for the 2000 *Loligo* squid fishery.

Area 613 is defined as Federal waters off Long Island, NY, bounded by straight lines connecting the following points in the order stated:

NMFS Northeast Statistical Area 613

Point	N. Lat.	W. Long.
LI1	([1])	73°00'
LI2	40°00'	73°00'
LI3	40°00'	71°40'
LI4	41°00'	71°40'
LI5	41°00'	([2])

[1] The intersection the longitude line with the 3 nautical mile line south of Patchogue, NY.

[2] The intersection the latitude line with the 3 nautical mile line south of Montauk, NY.

Area 537 is defined as Federal waters off Nantucket and Martha's Vineyard Islands, MA, bounded by straight lines connecting the following points in the order stated:

NMFS Northeast Statistical Area 537

Point	N. Lat.	W. Long.
CI1	([1])	70°00'
CI2	39°50'	70°00'
CI3	39°50'	71°40'
CI4	40°50'	71°40'
CI5	40°50'	71°20'

NMFS NORTHEAST STATISTICAL AREA 537—Continued

Point	N. Lat.	W. Long.
CI6	41°10'	71°20'
CI7	41°10'	71°10'
CI8	41°20'	71°10'
CI9	41°20'	(2)
CI10	(3)	

1 The intersection the longitude line with the 3 nautical mile line south of Nantucket Island, MA.
2 The intersection the latitude line with the 3 nautical mile line east of Gay Head, Martha's Vineyard, MA.
3 The 3 nautical mile line proceeding easterly along the south of Martha's Vineyard and Nantucket, back to the starting point.

Area 539 is defined as Federal waters off the State of Rhode Island, bounded by straight lines connecting the following points in the order stated:

NMFS NORTHEAST STATISTICAL AREA 539

Point	N. Lat.	W. Long.
RI1	(1)	71°10'
RI2	41°10'	71°10'
RI3	41°10'	71°20'
RI4	40°50'	71°20'
RI5	40°50'	71°40'
RI6	(2)	71°40'

1 The intersection the longitude line with the 3 nautical mile line south of approximately Sakonnet, RI.
2 The intersection the longitude line with the 3 nautical mile line south of approximately Quonochontaug, RI.

Area 616 is defined as offshore Federal waters off Southern New Jersey, bounded by straight lines connecting the following points in the order stated:

NMFS NORTHEAST STATISTICAL AREA 616

Point	N. Lat.	W. Long.
NJ1	40°00'	71°40'
NJ2	39°00'	71°40'
NJ3	39°00'	73°00'
NJ4	40°00'	73°00'
NJ1	40°00'	71°40'

Area 622 is defined as Federal waters off Ocean City, MD, bounded by straight lines connecting the following points in the order stated:

NMFS NORTHEAST STATISTICAL AREA 622

Point	N. Lat.	W. Long.
OC1	39°00'	73°00'
OC2	38°00'	73°00'
OC3	38°00'	74°00'
OC4	39°00'	74°00'
OC1	39°00'	73°00'

In addition, the Petitioners request that NMFS institute adequate enforcement mechanisms and observer coverage for these bycatch reduction measures. For instance, in closing area 613, the Petitioners suggest NMFS require a VMS in the *Loligo* fleet. If a bycatch quota is implemented, the Petitioners suggest observer coverage be required at levels sufficient to ensure observations of a statistically significant percentage of *Loligo* catch.

In addition, the Petitioners request that, for 2001, NMFS and the Council oversee the development, testing, and implementation of appropriately modified gear as an effective and equitable means of reducing scup bycatch. Such gear, the Petitioners feel, would obviate the need for the measures proposed by this amended petition.

NMFS requests comments on the amended petition for rulemaking. NMFS will consider this information in determining whether to proceed with the development of regulations requested by the amended petition.

Authority: 16 U.S.C. 1801 *et seq.*

Dated: October 7, 1999.

Bruce C. Morehead,

Acting Director, Office of Sustainable Fisheries, National Marine Fisheries Service.

[FR Doc. 99–26838 Filed 10–13–99; 8:45 am]

BILLING CODE 3510–22–F

DEPARTMENT OF COMMERCE

National Oceanic and Atmospheric Administration

50 CFR Part 660

[I.D. 093099A]

Pacific Fishery Management Council; Public Meetings

AGENCY: National Marine Fisheries Service (NMFS), National Oceanic and Atmospheric Administration (NOAA), Commerce.

ACTION: Notice of public meetings and hearing.

SUMMARY: The Pacific Fishery Management Council (Council) and its advisory entities will hold public meetings and a hearing for an amendment to the Pacific Coast Groundfish Fishery Management Plan that will address stock rebuilding and specific rebuilding programs for lingcod, bocaccio, and Pacific ocean perch. This document announces the dates and locations of the Council meetings and public hearing.

DATES: The Council and its advisory entities will meet October 31–November 5, 1999. See **SUPPLEMENTARY INFORMATION** for specific dates and times for these meetings.

ADDRESSES: The meetings and hearing will be held at the Red Lion Hotel Sacramento, 1401 Arden Way, Sacramento, California; telephone: 916–922–8041.

Council address: Pacific Fishery Management Council, 2130 SW Fifth Avenue, Suite 224, Portland, OR 97201.

FOR FURTHER INFORMATION CONTACT: Lawrence D. Six, Executive Director; telephone: 503–326–6352.

SUPPLEMENTARY INFORMATION:

Dates and Times

The Council meeting will begin on Tuesday, November 2, 1999, at 8 a.m., reconvening each day through Friday, November 5, 1999. All meetings are open to the public, except a closed session will be held from 8 a.m. until 9 a.m. on Thursday, November 4, 1999, to address litigation and personnel matters. The Council will meet as late as necessary each day to complete its scheduled business. The public hearing will be held during the regular session on Wednesday, November 3, 1999, beginning at approximately 10 a.m. (The exact time is not known because the time required for other agenda items is uncertain.)

Advisory Meetings

The Groundfish Management Team (GMT) will convene on Sunday, October 31, 1999, at 1 p.m. and on Monday, November 1, 1999, at 8 a.m. to address groundfish issues on the Council agenda. They will continue to meet as necessary through November 5, 1999, to address groundfish issues on the Council agenda.

The Salmon Technical Team will meet on Monday, November 1, 1999, at 8 a.m. and on Tuesday, November 2, 1999, at 8 a.m. to address salmon issues on the Council agenda.

The Scientific and Statistical Committee (SSC) will convene on Monday, November 1, 1999, at 8:30 a.m., and on Tuesday, November 2, at 1999, 8 a.m. to address scientific issues on the Council agenda.

The Habitat Steering Group will meet at 9:30 a.m. on Monday, November 1, 1999, to address issues and actions affecting habitat of fish species managed by the Council.

The Groundfish Advisory Subpanel (GAP) will meet on Monday, November 1, 1999, at 10 a.m. and will convene at 8 a.m. Tuesday, November 2, 1999, through Thursday, November 4, 1999, to address groundfish management items on the Council agenda.

The Work Group on Gear Impacts will meet on Monday, November 1, 1999, from 12:00 noon to 1 p.m. to develop a work plan to address fishing gear impacts on essential fish habitat.

The Budget Committee will meet on Monday, November 1, 1999, at 1 p.m. to review the status of the 1999 Council budget and the proposed budget for 2000.

The Salmon Advisory Subpanel will meet on Monday, November 1, 1999, at 1 p.m. to address salmon management items on the Council agenda.

The SSC, GMT, and GAP will meet jointly on Tuesday, November 2, 1999, from 10 a.m. to 12 noon to discuss the stock assessment process.

The Enforcement Consultants will meet at 5:30 p.m. on Tuesday, November 2, 1999, and will continue to meet as necessary through November 5, 1999, to address enforcement issues relating to Council agenda items.

The following items are on the Council agenda, but not necessarily in this order:

A. Call to Order

1. Opening Remarks, Introductions, Roll Call
2. Approve Agenda
3. Approve June and September Meeting Minutes

B. Pacific Halibut Management

1. Summary of 1999 Fisheries
2. Estimate of Bycatch in 1998
3. Changes to Catch Sharing Plan and Regulations for 2000

C. Salmon Management

1. Sequence of Events and Status of Fisheries in 1999
2. Potential Revisions to Methodologies, Including Hook-and-Release Mortality Estimates for Recreational Fisheries
3. Revisions to the Preseason Process
4. Changes to 2000 Management Measures to Protect Central Valley Spring Chinook
5. Test Fishery Protocol
6. Report on Selective Fishery Off Oregon in 1999
7. Process for Reviewing Oregon Coastal Natural Coho Salmon Management Program in 2000

D. Habitat Issues

E. Coastal Pelagic Species Management

1. Update on Implementation of Limited Entry
2. Pacific Mackerel Harvest Guideline

F. Highly Migratory Species Management - Guidance to Plan Development Team

G. Groundfish Management

1. Status of Federal Regulations, NMFS Activities and Applications for Exempted Fishing Permits
2. Fishery Management Plan Amendment for Stock Rebuilding and Specific Rebuilding Programs for Lingcod, Bocaccio, and Pacific Ocean Perch (Public Hearing)
3. Final Harvest Levels for 2000
4. Regulatory Amendment to Establish an Observer Program
5. Review of Stock Assessment Process and Stocks to be Assessed in 2000
6. Terms of Reference for Harvest Policy Workshop
7. Management Measures for 2000
8. Status of Fisheries and Inseason Adjustments (If Necessary)
9. Control Date for Groundfish Limited Entry
10. Strategic Plan for Groundfish
11. Groundfish Priorities and Schedules

H. Administrative and Other Matters

1. Report of the Budget Committee
2. Status of Legislation
3. Appointments
4. Draft Agenda for March 2000

Although non-emergency issues not contained in this agenda may come before this Council for discussion, those issues may not be the subject of formal Council action during this meeting. Council action will be restricted to those issues specifically listed in this document and any issues arising after publication of this document that require emergency action under section 305(c) of the Magnuson-Stevens Fishery Conservation and Management Act, provided the public has been notified of the Council's intent to take final action to address the emergency.

Special Accommodations

These meetings are physically accessible to people with disabilities. Requests for sign language interpretation or other auxiliary aids should be directed to Mr. John S. Rhoton at (503) 326–6352 at least 5 days prior to the meeting date.

Authority: 16 U.S.C. 1801 *et seq.*

Dated: October 7, 1999.

Bruce C. Morehead,

Acting Director, Office of Sustainable Fisheries, National Marine Fisheries Service.

[FR Doc. 99–26837 Filed 10–13–99; 8:45 am]

BILLING CODE 3510–22–F

Notices

Federal Register
Vol. 64, No. 198
Thursday, October 14, 1999

This section of the FEDERAL REGISTER contains documents other than rules or proposed rules that are applicable to the public. Notices of hearings and investigations, committee meetings, agency decisions and rulings, delegations of authority, filing of petitions and applications and agency statements of organization and functions are examples of documents appearing in this section.

DEPARTMENT OF AGRICULTURE

Agricultural Marketing Service

[Docket No. FV96–501–N]

Notice of Request for Extension and Revision of a Currently Approved Information Collection

AGENCY: Agricultural Marketing Service, USDA.

ACTION: Notice and request for comments.

SUMMARY: In accordance with the Paperwork Reduction Act of 1995 (44 U.S.C. Chapter 35), this notice announces the Agricultural Marketing Service's (AMS) request for comments from the fruit, vegetable and ornamental industry to improve or change the procedures for collecting information used to compile and generate new and expand existing fruit, vegetable and ornamental reports to assist the trade in making production and marketing decisions.

DATES: Comments on this notice must be received by December 13, 1999, to be assured of consideration.

ADDITIONAL INFORMATION OR COMMENTS: Contact Terry C. Long, Chief; Fruit and Vegetable Market News Branch, Fruit and Vegetable Programs, AMS–USDA, Room 2503 South Building, PO Box 96456, Washington, DC 20090–6456; Telephone: (202) 720–2745, Fax: (202) 720–0547.

SUPPLEMENTARY INFORMATION:

Title: Fruit and Vegetable Market News.

OMB Number: 0581–0006.

Expiration Date of Approval: February 29, 2000.

Type of Request: Extension and revision of a currently approved information collection.

Abstract: Collection and dissemination of information for fruit, vegetable and ornamental production and to facilitate trading by providing a price base used by producers, wholesalers, and retailers to market product.

The Agricultural Marketing Act of 1946 (7 U.S.C. 1621–1627), section 203(g) directs and authorizes the collection and dissemination of marketing information including adequate outlook information, on a market area basis, for the purpose of anticipating and meeting consumer requirements, aiding in the maintenance of farm income and to bring about a balance between production and utilization.

The fruit and vegetable industry provides information on a voluntary basis, and is gathered through confidential telephone and face-to-face interviews by market reporters. Reporters request supplies, demand, and prices of over 400 fresh fruit, vegetable, nut ornamental, and other specialty crops.

The fruit and vegetable market news reports are used by academia, but are primarily used by the fruit, vegetable and ornamental trade, which includes packers, processors, brokers, retailers, and producers. The fruit and vegetable industry requested that the Department of Agriculture issue price and supply market reports for commodities of regional, national and international significance in order to assist them in making immediate production and marketing decisions and as a guide to the amount of product in the supply channel.

Many government agencies use the reports to make their market outlook projections. Data from these reports is included in the information forwarded to the Secretary's office as well, as his staff, as needed, to keep them appraised of the current market conditions and movement of fruit, vegetable, and ornamental commodities in the United States. Economists at most major agricultural colleges and universities use the reports to make both short and long term market projections. The data is used extensively by consulting firms and private economists to aid them in determining available supplies and current pricing.

The information is collected, compiled, and disseminated by an impartial third party, in a manner which protects the confidentiality of the reporter. Further, since the Government is a purchaser of fruits and vegetables, a system to monitor the collection and reporting of data is needed.

Estimate of Burden: Public reporting burden for this collection of information is estimated to average .033 hours per response.

Respondents: Fruit, vegetable, and ornamental industry, or other for-profit businesses, individuals or households, farms, or Federal Government.

Estimated Number of Respondents: 18,361.

Estimated Number of Responses per Respondent: 200.

Estimated Total Annual Burden on Respondents: 121,010.

Comments are invited on: (1) Whether the proposed collection of information is necessary for the proper performance of the functions of the agency, including whether the information will have practical utility; (2) the accuracy of the agency's estimate of the burden of the proposed collection of information, including the validity of the methodology and assumptions used; (3) ways to enhance the quality, utility, and clarity of the information to be collected; and (4) ways to minimize the burden of the collection of information on those who are to respond, including through the use of appropriate automated, electronic, mechanical, or other technological collection techniques or other forms of information technology. Comments may be sent to: Terry C. Long, Chief, Fruit and Vegetable Market News Branch, Fruit and Vegetable Programs, AMS–USDA, Room 2503 South Building, PO Box 96456, Washington, DC 20090–6456.

All responses to this notice will be summarized and included in the request for OMB approval. All comments will also become a matter of public record.

Dated: October 7, 1999.

Robert C. Keeney,

Deputy Administrator, Fruit and Vegetable Programs.

[FR Doc. 99–26803 Filed 10–13–99; 8:45 am]

BILLING CODE 3410–02–P

DEPARTMENT OF AGRICULTURE

Commodity Credit Corporation

Total Quality Systems Audit Implementation

AGENCY: Commodity Credit Corporation, USDA.

ACTION: Notice of institution of ''Total Quality Systems Audit'' program for Commodity Credit Corporation food purchases.

SUMMARY: Notice is hereby given that, the Commodity Credit Corporation (CCC) is phasing in the Total Quality Systems Audit (TQSA) program for CCC's purchases of food for humanitarian food assistance programs. This program is being implemented to ensure that CCC purchases meet customer requirements and needs. Vendors offering processed commodities covered by TQSA for sale to CCC will have to be approved under the TQSA standards which involve inspecting the vendor's quality control system and relying on that system to assure the quality of the end product. TQSA will reduce Government oversight of the commercial sector, but can increase confidence in the final product. The TQSA program is a fee-for-service program, and will be primarily administered for CCC by the Department of Agriculture's Farm Service Agency (FSA) through FSA's Warehouse Licensing and Examination Division, Kansas City Commodity Office. All vendors must consult individual procurement announcements to determine whether their commodity is subject to TQSA procedures.

EFFECTIVE DATE: July 1, 1999.

FOR FURTHER INFORMATION CONTACT: Dean Jensen, Chief, Contract Management Branch, Procurement and Donations Division, Farm Service Agency, U.S. Department of Agriculture, STOP 0555, 1400 Independence Avenue, SW, Washington, DC 20250–0551, telephone (202) 720–2115, fax (202) 690–1809; or Timothy Mehl, Chief, Warehouse Licensing and Examination Division, Kansas City Commodity Office, 9200 Ward Parkway, Kansas City, Missouri 64114, telephone (816) 926–6843, fax (816) 926–1774.

SUPPLEMENTARY INFORMATION: TQSA is a new method of identifying suppliers who are considered sufficiently responsible to supply foods for CCC food purchases. The program relies on audits by FSA of the vendor's quality control system. Those audits will be conducted against an established standard. Not all products procured under CCC food assistance programs will be evaluated using TQSA procedures. Vendors should consult the applicable commodity purchase announcement, invitation, Notice to the Trade, or contact the Kansas City Commodity Office to determine whether their product is covered.

The audit program will be conducted in lieu of or will reduce the need for traditional full-scale end-item inspections where only the final product is checked for conformance to product specifications. Under TQSA suppliers are instead required to establish and maintain a quality management system that addresses all aspects of production. By auditing this quality management system, the absolute amount of Government oversight in this process can be substantially reduced while increasing confidence in the quality of the final product.

The audit program will apply specific criteria that a supplier must meet to establish bidder eligibility. During an audit, the supplier's quality management system will be given a rating of ''meets,'' ''partially meets,'' or ''does not meet'' on multiple criteria. Once all required questions have been addressed by the vendor and the audit team, a score is generated which will provide FSA with a numerical rating. FSA will establish the minimum score necessary for bidder eligibility. If a supplier fails to meet this minimum, they will be considered ineligible to bid until the score is improved to an acceptable level. FSA will phase in TQSA requirements on a commodity by commodity basis, and vendors will be provided sufficient notification in order to meet TQSA requirements before TQSA compliance is incorporated in the applicable commodity contract terms.

Also, by reducing Government oversight and approving vendors prior to awarding contracts, the costs associated with inspecting commodities procured for food assistance programs can be substantially reduced. Also, by decreasing the likelihood of product non-conformance and subsequent rejection, costs associated with reacquiring and replacing product are further reduced. These cost reductions benefit the food assistance programs by allowing higher quality products to be procured more economically.

Annually, more than 825 million pounds of food products valued at approximately $850 million are purchased by CCC and distributed for use in domestic and international food assistance programs. CCC and its suppliers have spent over $5 million annually on inspection of those products. TQSA aims to reduce the cost of inspection by a minimum of 30–50 percent.

During the initial months that a supplier is subject to TQSA requirements, they will be required to submit samples to the appropriate commodity testing laboratory for compliance testing. This requirement is intended to provide supplemental verification of program effectiveness and supplier compliance with TQSA. If deemed appropriate by the contracting office and TQSA staff, the required final product testing by a third party laboratory may be eliminated or reduced.

The development of TQSA started in 1997, when CCC began a pilot program to develop a quality management program that would replace traditional end-item inspection. During the two years of the pilot program, FSA staff worked with members of academia, industry, and Government to develop the criteria and determine the effectiveness of the TQSA program.

Prior to the implementation of the TQSA procedures, CCC relied almost entirely on end-item inspection to ensure that food purchased for domestic and international food asistance programs met the needs and requirements of the program recipients. Traditional statistical sampling methods and finished product testing gives little consideration to the conditions under which a product is produced, only to the characteristics of the final product. This approach only finds nonconforming product and allows it to be removed from the system, it does not prevent the nonconformance from occurring which avoids problems of non-detection that might apply where there was reliance on end-item inspection.

TQSA is based on the proven premise that product conformance can be attained by allowing the supplier to define how production, delivery, and service are handled. USDA's role is to verify that the methods chosen are effective and meet applicable regulatory and contractual requirements, and that the supplier adheres to its stated policies and procedures.

Signed at Washington, DC, on October 6, 1999.

Keith Kelly,

Executive Vice President, Commodity Credit Corporation.

[FR Doc. 99–26802 Filed 10–13–99; 8:45 am]

BILLING CODE 3410–05–P

DEPARTMENT OF AGRICULTURE

Food and Nutrition Service

Agency Information Collection Activities: Proposed Collection; Comment Request—School Breakfast Program

AGENCY: Food and Nutrition Service, USDA.

ACTION: Notice.

SUMMARY: In accordance with the Paperwork Reduction Act of 1995, the Food and Nutrition Service announces its intention to request the Office of Management and Budget's (OMB) review of the information collections related to the School Breakfast Program, OMB number 0584–0012.

DATES: Comments on this notice must be received by December 13, 1999 to be assured of consideration.

ADDRESSES: Comments are invited on: (a) Whether the proposed collection of information is necessary for the proper performance of the functions of the agency, including whether the information will have practical utility; (b) the accuracy of the agency's estimate of the burden of the proposed collection of information, including the validity of the methodology and assumptions used; (c) ways to enhance the quality, utility and clarity of the information to be collected; and (d) ways to minimize the burden of collection of information on those who are to respond, including through the use of appropriate automated, electronic, mechanical or other technological collection techniques or other forms of information technology. Comments and requests for copies of this information collection may be sent to Mr. Terry Hallberg, Chief, Program Analysis and Monitoring Branch, Child Nutrition Division, Food and Nutrition Service, USDA, 3101 Park Center Drive, Room 1006, Alexandria, Virginia 22302.

All responses to this Notice will be summarized and included in the request for OMB approval, and will become a matter of public record.

FOR FURTHER INFORMATION CONTACT: Mr. Terry Hallberg, at (703) 305–2600.

SUPPLEMENTARY INFORMATION:

Title: School Breakfast Program.

OMB Number: 0584–0012.

Expiration Date: 10/31/99.

Type of Request: Extension of a currently approved collection.

Abstract: Section 4 of the Child Nutrition Act of 1966 (CNA), as amended, authorizes the School Breakfast Program. The School Breakfast Program is a nutrition assistance program whose benefit is a breakfast meeting nutritional requirements prescribed by the Department in accordance with section 4(e) of the CNA. That provision requires that ''[b]reakfasts served by schools participating in the school breakfast program under this section shall consist of a combination of foods and shall meet minimum nutritional requirements prescribed by the Secretary on the basis of tested nutritional research.'' Section 10 of the CNA requires the Secretary of Agriculture to prescribe such regulations as he may deem necessary to carry out this Act and the National School Lunch Act. Pursuant to this provision, the Food and Nutrition Service has issued 7 CFR part 220 to implement the School Breakfast Program.

Respondents: State agencies, school food authorities and schools.

Estimated Number of Respondents: 58 State agencies, 10,018 school food authorities, and 71,672 schools.

Average Number of Responses per Respondent: The number of responses is estimated to be 16 responses per respondent per year.

Estimated Total Annual Burden on Respondents: The recordkeeping burden hours are estimated at 4,674,185, and the reporting burden hours are estimated at 220,516, for an estimated total annual burden of 4,894,701.

Dated: October 5, 1999.

Samuel Chambers, Jr.,

Administrator.

[FR Doc. 99–26731 Filed 10–13–99; 8:45 am]

BILLING CODE 3410–30–P

DEPARTMENT OF AGRICULTURE

Food and Nutrition Service

Agency Information Collection Activities: Proposed Collection; Comment Request—7 CFR Part 210, National School Lunch Program

AGENCY: Food and Nutrition Service, USDA.

ACTION: Notice.

SUMMARY: In accordance with the Paperwork Reduction Act of 1995, this Notice announces the Food and Nutrition Service's (FNS) intention to request Office of Management and Budget (OMB) review of the information collections related to the National School Lunch Program, OMB number 0584–0006.

DATES: To be assured of consideration, comments must be received by December 13, 1999.

ADDRESSES: Send comments and requests for copies of this information collection to: Mr. Terry Hallberg, Chief, Program Analysis and Monitoring Branch, Child Nutrition Division, Food and Nutrition Service, U.S. Department of Agriculture, 3101 Park Center Drive, Room 1006, Alexandria, Virginia 22302.

Comments are invited on: (a) Whether the proposed collection of information is necessary for the proper performance of the functions of the agency, including whether the information will have practical utility; (b) the accuracy of the agency's estimate of the burden of the proposed collection of information, including the validity of the methodology and assumptions used; (c) ways to enhance the quality, utility and clarity of the information to be collected; and (d) ways to minimize the burden of the collection of information on those who are to respond, including through the use of appropriate automated, electronic, mechanical, or other technological collection techniques or other forms of information technology.

All comments will be summarized and included in the request for OMB approval, and will become a matter of public record.

FOR FURTHER INFORMATION: Contact Mr. Terry Hallberg at (703) 305–2600.

SUPPLEMENTARY INFORMATION:

Title: 7 CFR part 210, National School Lunch Program.

OMB Number: 0584–0006.

Expiration Date: October 31, 1999.

Type of Request: Extension of a currently approved collection.

Abstract: The National School Lunch Act (NSLA), as amended, authorizes the National School Lunch Program. The National School Lunch Program is a nutrition assistance program whose benefit is a lunch that meets the nutritional requirements prescribed by the Department of Agriculture in accordance with Subsection 9(a) of the NSLA. That provision requires that ''[l]unches served by the schools participating in the school lunch program under this Act shall meet minimum requirements prescribed by the Secretary on the basis of tested nutritional research. * * *'' Section 10 of the Child Nutrition Act of 1966, as amended, requires the Secretary of Agriculture to prescribe such regulations as he may deem necessary to carry out this Act and the NSLA.'' Pursuant to that provision, FNS has issued Part 210 implement the recordkeeping and reporting requirements of the NSLP.

Respondents: State agencies, school food authorities, schools.

Estimated Number of Respondents: 58 State agencies, 20,348 school food authorities, 96,506 schools.

Average Number of Responses per Respondent: The number of responses is estimated to be 19 responses per respondent per year.

Estimated Total Annual Burden on Respondents: The recordkeeping hours are estimated at 8,497,780, and the reporting burden hours are estimated at 1,099,001, for an estimated total annual burden of 9,596,781.

Dated: October 5, 1999.

Samuel Chambers, Jr.,

Administrator.

[FR Doc. 99–26732 Filed 10–13–99; 8:45 am]

BILLING CODE 3410–30–P

DEPARTMENT OF AGRICULTURE

Food Safety and Inspection Service

[Docket No. 99–041N]

Exemption of Retail Store Operations From Inspection Requirements

AGENCY: Food Safety and Inspection Service, USDA.

ACTION: Notice.

SUMMARY: The Food Safety and Inspection Service (FSIS) is publishing this notice to advise interested persons of a change in the application of the requirements for inspection under the Federal Meat Inspection Act (FMIA) and the Poultry Products Inspection Act (PPIA). The United States Court of Appeals for the District of Columbia Circuit recently decided that retail stores exempt from federal inspection requirements do not become subject to those requirements when they supply their own kiosks with cooked hams and cooked turkeys that the retail stores have sliced, glazed, and packaged. As a result, inspection under the FMIA or the PPIA is not required if an otherwise exempt retail store transports products such as these to additional locations before it sells them to consumers.

FSIS is reviewing its regulations on the exemption of retail operations from requirements for inspection under the FMIA and the PPIA. After completing this review, the Agency intends to initiate notice-and-comment rulemaking on the application of these requirements and on the handling conditions necessary to ensure that products delivered to consumers are not adulterated or misbranded.

FOR FURTHER INFORMATION CONTACT: Philip Derfler, Deputy Administrator, Office of Policy, Program Development and Evaluation, Food Safety and Inspection Service, Washington, DC 20250–3700; (202) 720–2710.

SUPPLEMENTARY INFORMATION: The Food Safety and Inspection Service (FSIS) administers a regulatory program under the Federal Meat Inspection Act (FMIA) (21 U.S.C. 601 *et seq.*) and the Poultry Products Inspection Act (PPIA) (21 U.S.C. 451 *et seq.*) to protect the health and welfare of consumers by preventing the distribution of products that are unwholesome, adulterated, or misbranded. Both the FMIA and the PPIA include requirements for federal inspection, and they prohibit selling or transporting, offering for sale or transportation, or receiving for transportation, in commerce, products that are adulterated or misbranded and products required to be inspected unless they have been inspected and passed (21 U.S.C. 458(a)(2) and 610(c)). Intrastate operations and transactions are effectively subject to the same requirements and prohibitions, pursuant to a State inspection program or designation for federal inspection (21 U.S.C. 454(c)(1) and 661(c)(1)).

In *The Original Honey Baked Ham Company of Georgia, Inc.* v. *Glickman, et al.*, 172 F.3d 885, 886 (D.C. Cir. 1999), the United States Court of Appeals for the District of Columbia Circuit decided that Honey Baked Ham retail stores that are exempt from federal inspection requirements do not become subject to those requirements when they supply their own temporary kiosks (booths with refrigeration units) with cooked hams and cooked turkeys that the retail stores have sliced, glazed, and packaged. According to the Court of Appeals:

> * * * That the company's retail stores supply temporary kiosks during holiday seasons does not * * * transform them into ''hybrid retail/wholesale'' establishments to which the federal inspection requirements apply. A wholesaler does not sell to the ultimate consumer; a wholesaler is a middleman who sells to a retailer. To the extent that Honey Baked Ham's retail stores supply the company's kiosks, they still do not fit within the category of ''wholesalers.'' The stores do not sell their products to the kiosks; the kiosks are simply an extension of the stores' retail operations. According to the * * * Department's own regulations, the company's stores fit within the description of retail establishments, kiosks or not. Their operations, of the sort ''traditionally and usually conducted at retail stores,'' will not change when they supply kiosks. The stores glaze, slice and package products. See 9 CFR §§ 303.1(d)(2)(i)(a), (c), (e), 381.10(d)(2)(i). They sell to consumers only, not to retailers. See 9 CFR §§ 303.1(d)(2)(iii)(a), 381.10(d)(2)(iii)(a). They use meat and poultry products that are federally- or State-inspected and passed. See 9 CFR §§ 303.1(d)(2)(iii)(c), 381.10(d)(2)(iii)(c). * * * [T]here is no indication that [Honey Baked] sales * * * will exceed normal retail quantities. See 9 CFR §§ 303.1(d)(2)(ii), 381.10(d)(2)(ii). Because the company's retail stores will not lose their retail character or become ''similar'' to wholesale establishments when the kiosk system is fully implemented, the stores are not required to submit to federal inspection.

172 F.3d at 889.

Therefore, otherwise exempt retail store operations do not become subject to inspection requirements because a retail store transports products such as these to additional locations for sale to consumers. Retail stores that believe their operations have been subjected to federal inspection solely because they transport products to additional locations before sale may request that inspection be terminated. (The request should be directed to the district office for the district in which a store is located.) The Agency is informing State inspection program officials, as well as FSIS personnel, of this change.

In addition, FSIS is reviewing its regulations on the exemption of retail operations from requirements for inspection under the FMIA or the PPIA. After completing this review, the Agency intends to initiate notice-and-comment rulemaking on the application of these requirements and on the handling conditions necessary to ensure that products delivered to consumers are not adulterated or misbranded. (See 21 U.S.C. 454, 455, 463(a), 464, 603 through 606, 623, 624, and 661.)

Additional Public Notification

Pursuant to Departmental Regulation 4300–4, ''Civil Rights Impact Analysis,'' dated September 22, 1993, FSIS has considered the potential civil rights impact of this notice on minorities, women, and persons with disabilities. FSIS anticipates that this notice will not have a negative or disproportionate impact on minorities, women, or persons with disabilities. However, notices generally are designed to provide information and public awareness of policy developments is important. Consequently, in an effort to better ensure that minorities, women, and persons with disabilities are aware of this notice, FSIS will announce the publication of this **Federal Register** notice in the FSIS Constituent Update.

FSIS provides a weekly FSIS Constituent Update, which is communicated via fax to over 300 organizations and individuals. In addition, the update is available on line through the FSIS web page located at *http://www.fsis.usda.gov*. The web page is used to provide information regarding FSIS policies, procedures, regulations, **Federal Register** notices, FSIS public meetings, recalls, and any other types of information that could affect or would be of interest to our constituents/stakeholders. The constituent fax list consists of industry, trade, and farm groups, consumer interest groups, allied health professionals, scientific professionals, and other individuals that have requested to be included.

Through these various channels, FSIS is able to provide information to a much broader, more diverse audience. For more information and to be added to the constituent fax list, fax your request to

the Congressional and Public Affairs Office, at (202) 720–5704.

Done at Washington, DC, on: October 6, 1999.

Thomas J. Billy,

Administrator.

[FR Doc. 99–26733 Filed 10–13–99; 8:45 am]

BILLING CODE 3410–DM–P

DEPARTMENT OF AGRICULTURE

Rural Utilities Service

East Kentucky Power Cooperative, Inc., Notice of Availability of an Environmental Assessment

AGENCY: Rural Utilities Service, USDA.

ACTION: Notice of availability of an environmental assessment.

SUMMARY: Notice is hereby given that the Rural Utilities Service (RUS) is issuing an environmental assessment with respect to the potential environmental impacts related to the addition of an 80 megawatt combustion turbine in Clark County, Kentucky. RUS may provide financing assistance to East Kentucky Power Cooperative for the project.

FOR FUTHER INFORMATION CONTACT: Bob Quigel, Environmental Protection Specialist, Rural Utilities Service, Engineering and Environmental Staff, Stop 1571, 1400 Independence Avenue, SW, Washington, DC 20250–1571, telephone: (202) 720–0468. Bob's e-mail address is bquigel@rus.usda.gov. Information is also available from Jeff Hohman, Environmental Manager, East Kentucky Power Cooperative, P.O. Box 707, Winchester, Kentucky 40392–0707, telephone (606) 744–4812.

SUPPLEMENTARY INFORMATION: The project consists of the construction of an additional 80 megawatt combustion turbine at East Kentucky Power Cooperative's Smith Combustion Turbine Site located approximately 9 miles southeast of Winchester, Kentucky. There are 3, 100 megawatt combustion turbines currently in operation at the site. The additional unit will be constructed next to the 3 existing units.

East Kentucky Power Cooperative prepared an environmental report for RUS which describes the project and assesses its environmental impacts. RUS has conducted an independent evaluation of the environmental report and believes that it accurately assesses the impacts of the proposed project. This environmental report will serve as RUS' environmental assessment of the project. No significant impacts are expected as a result of the construction of the project.

The environmental assessment can be reviewed at the Clark County Public Library, 370 South Burns Avenue, Winchester, Kentucky, telephone (606) 744–5661, the headquarters of East Kentucky Power Cooperative, 4775 Lexington Road, Winchester, Kentucky, or the headquarters of RUS, at the address provided above.

Questions and comments should be sent to RUS at the address provided. RUS will accept questions and comments on the environmental assessment for at least 30 days from the date of publication of this notice.

Any final action by RUS related to the proposed project will be subject to, and contingent upon, compliance with all relevant Federal environmental laws and regulations and completion of environmental review procedures as prescribed by the 7 CFR part 1794, Environmental Policies and Procedures.

Dated: October 6, 1999.

Glendon D. Deal,

Acting Director, Engineering and Environmental Staff.

[FR Doc. 99–26730 Filed 10–13–99; 8:45 am]

BILLING CODE 3410–15–P

DEPARTMENT OF COMMERCE

Submission for OMB Review; Comment Request

The Department of Commerce (DoC) has submitted to the Office of Management and Budget (OMB) for clearance the following proposal for collection of information under the provisions of the Paperwork Reduction Act (44 U.S.C. chapter 35).

Agency: Patent and Trademark Office (PTO).

Title: Rules for Patent Maintenance Fees.

Form Numbers: PTO/SB/45/47/65/66.

Agency Approval Number: 0651–0016.

Type of Request: Reinstatement, with change, of a previously approved collection for which approval has expired.

Burden: 26,099 hours annually.

Number of Respondents: 326,101 responses annually.

Avg. Hours Per Response: Based on estimates and knowledge of the forms, the PTO estimates the burden hours required by the public to gather, prepare and submit Maintenance Fee Transmittal Form PTO/SB/45 and ''Fee Address'' Indication Form PTO/SB/47 to be five minutes each. In the electronic version, it is estimated that it will take 10 seconds to enter the Patent Number and Serial Number to retrieve payment information and 10 seconds to select the fee codes to be paid if the patentee wishes to pay for the maintenance fee, for a total of 20 seconds. Petition to Accept Unavoidably Delayed Payment of Maintenance Fee in an Expired Patent Form PTO/SB/65 and Petition to Accept Unintentionally Delayed Payment of Maintenance Fee in an Expired Patent Form PTO/SB/66 are estimated to take one hour each to complete.

Needs and Uses: The identification of the application number and the patent number, the maintenance fee amount, and the surcharge amount on forms POT/SB/45 and PTO/SB/47 will be used by the PTO to record the payment of maintenance fees in order to keep the patents in force. The information will be used to prepare a receipt for the patentee and to determine whether or not a maintenance fee has been paid in response to any inquiry from the public. The optional information of the payment year and the small entity status are necessary to determine the amount of the maintenance fee due.

The use of forms PTO/SB/65 and PTO/SB/66 readily and conveniently indicates to the PTO that the required elements for the filing of petitions under 37 CFR 1.378(b) or (c) have or have not been submitted. For example, the above forms include the verified statement and appropriate check boxes (list) for indicating that the required items have been attached to the petition form, such as the maintenance fee, small entity status, reason for unintentional or unavoidable delay, and surcharge. The top of the form indicates a space for the patent number and issue date, and the application number and corresponding filing date. This identifying information assists the Office in matching the fee with the appropriate patent.

Affected Public: Individuals or households, business or other for-profit institutions, not-for-profit institutions, and the Federal government.

Frequency: Three (3) times; once every four years for payment of maintenance fees and on occasion for petitions to reinstate an expired patent (unintentional or unavoidable).

Respondent's Obligation: Required to obtain or retain a benefit.

OMB Desk Officer: Peter Weis, (202) 395–3630.

Copies of the above information collection proposal can be obtained by calling or writing Linda Engelmeier, Departmental Forms Clearance Officer, Office of the Chief Information Officer, (202) 482–3272, Department of Commerce, Room 5027, 14th and Constitution Avenue, NW, Washington,

Washington, DC 20230 (or via the Internet at LEngelme@doc.gov).

Written comments and recommendations for the proposed information collection should be sent to Peter Weiss, OMB Desk Officer, Room 10236, New Executive Office Building, Washington DC 20503.

Dated: October 7, 1999.

Linda Engelmeier,

Departmental Forms Clearance Officer, Office of the Chief Information Officer.

[FR Doc. 99–26756 Filed 10–13–99; 8:45 am]

BILLING CODE 3510–16–P

DEPARTMENT OF COMMERCE

Submission for OMB Review; Comment Request

DOC has submitted to the Office of Management and Budget (OMB) for clearance the following proposal for collection of information under the provisions of the Paperwork Reduction Act (44 U.S.C. chapter 35).

Agency: Census Bureau.

Title: Annual Retail Trade Report.

Form Number(s): SA–44, –44A, –44C, –44N, –45, –45C, –721.

Agency Approval Number: 0607–0013.

Type of Request: Revision of a currently approved collection.

Burden: 9,437 hours.

Number of Respondents: 23,337.

Avg Hours Per Response: 24 and one half minutes.

Needs and Uses: The Bureau of the Census conducts the Annual Retail Trade Survey to collect annual totals of sales, inventories, inventory valuation methods, purchases, and accounts receivable balances from a sample of retail establishments in the United States. The estimates compiled from this survey are critical to the accurate measurement of total economic activity and are used in computing such indicators of economic well-being as the Gross Domestic Product and the National Income and Product Accounts. Survey results also provide valuable information for economic policy decisions and actions by the government and are widely used by private businesses, trade organizations, professional associations, and others for market research and analysis.

In this request, we are changing report form numbers and adding new industry coverage to accommodate the changeover to NAICS based economic classifications, adding questions about on-line sales and e-commerce, and redrawing an overall smaller survey sample to reflect our discontinued collection of sales data at the establishment level.

Affected Public: Businesses or other for-profit organizations.

Frequency: Annually.

Respondent's Obligation: Mandatory.

Legal Authority: Title 13 USC, sections 182, 224, and 225.

OMB Desk Officer: Susan Schechter, (202) 395–5103.

Copies of the above information collection proposal can be obtained by calling or writing Linda Engelmeier, DOC Forms Clearance Officer, (202) 482–3272, Department of Commerce, room 5027, 14th and Constitution Avenue, NW, Washington, DC 20230 (or via the Internet at LEngelme@doc.gov).

Written comments and recommendations for the proposed information collection should be sent within 30 days of publication of this notice to Susan Schechter, OMB Desk Officer, room 10201, New Executive Office Building, Washington, DC 20503.

Dated: October 8, 1999.

Linda Engelmeier,

Departmental Forms Clearance Officer, Office of the Chief Information Officer.

[FR Doc. 99–26757 Filed 10–13–99; 8:45 am]

BILLING CODE 3510–07–P

DEPARTMENT OF COMMERCE

International Trade Administration

[A–588–804]

Antifriction Bearings (Other Than Tapered Roller Bearings) and Parts Thereof from Japan; Final Results of Changed-Circumstances Review

AGENCY: Import Administration, International Trade Administration, Department of Commerce.

ACTION: Notice of final results of changed-circumstances review.

SUMMARY: On August 10, 1999, the Department of Commerce published the notice of initiation and preliminary results of its changed-circumstances review concerning its examination of whether Tsubaki-Nakashima Co., Ltd. is the successor-in-interest to Tsubakimoto Precision Products, Co., Ltd. for purposes of determining antidumping liability. We have now completed that review and determine that Tsubaki-Nakashima Co., Ltd. is the successor-in-interest to Tsubakimoto Precision Products, Co., Ltd. for antidumping duty law purposes and, as such, receives the antidumping duty cash deposit rate previously assigned to Tsubakimoto Precision Products, Co., Ltd. of 7.77 percent ad valorem.

EFFECTIVE DATE: October 14, 1999.

FOR FURTHER INFORMATION CONTACT: J. David Dirstine or Richard Rimlinger, Office of AD/CVD Enforcement, Import Administration, International Trade Administration, U.S. Department of Commerce, 14th Street and Constitution Avenue, NW, Washington, DC 20230; telephone (202) 482–4733.

SUPPLEMENTARY INFORMATION:

Background

In a letter dated July 16, 1999, Tsubaki-Nakashima Co., Ltd. (Tsubaki-Nakashima) advised the Department of Commerce (the Department) that, effective April 1, 1996, Tsubakimoto Precision Products, Co., Ltd. (Tsubakimoto) merged with Nakashima Manufacturing Co., Ltd. (Nakashima). According to the submission, Tsubakimoto was the surviving company and is currently operating under the name Tsubaki-Nakashima. Tsubaki-Nakashima stated that the former President of Tsubakimoto is now the President of Tsubaki-Nakashima, that the former Executive Vice President of Tsubakimoto is now one of three Executive Vice Presidents of Tsubaki-Nakashima (two additional Executive Vice Presidents were added following the merger), that the sole Managing Director of Tsubaki-Nakashima was one of two Managing Directors of Tsubakimoto, and, further, that all the current Directors of Tsubaki-Nakashima were Directors of Tsubakimoto. Tsubaki-Nakashima also stated that its production facilities are substantially similar to Tsubakimoto. Specifically, Tsubaki-Nakashima stated that three of its four production facilities were operated previously by Tsubakimoto. Finally, Tsubaki-Nakashima stated that its supplier relationships and customer base are substantially similar to those of Tsubakimoto. Tsubaki-Nakashima submitted exhibits listing the management, production faciliites, major suppliers, and customers of both Tsubaki-Nakashima and Tsubakimoto.

On August 10, 1999, the Department published in the **Federal Register** (64 FR 43341) the notice of initiation and preliminary results of its antidumping duty changed circumstances review of the antidumping duty order on ball bearings and parts thereof from Japan. We now have completed this changed-circumstances review in accordance with section 751(b) of the Tariff Act, as amended (the Act).

Scope of the Review

The products covered by this review are ball bearings and parts thereof. These products include all ball bearings that employ balls as the rolling element. Imports of these products are classified

under the following categories: antifriction balls, ball bearings with integral shafts, ball bearings (including radial ball bearings) and parts thereof, and housed or mounted ball bearing units and parts thereof.

Imports of these products are classified under the following Harmonized Tariff Schedules (HTS) subheadings: 3926.90.45, 4016.93.00, 4016.93.10, 4016.93.50, 6909.19.5010, 8431.20.00, 8431.39.0010, 8482.10.10, 8482.10.50, 8482.80.00, 8482.91.00, 8482.99.05, 8482.99.2580, 8482.99.35, 8482.99.6595, 8483.20.40, 8483.20.80, 8483.50.8040, 8483.50.90, 8483.90.20, 8483.90.30, 8483.90.70, 8708.50.50, 8708.60.50, 8708.60.80, 8708.70.6060, 8708.70.8050, 8708.93.30, 8708.93.5000, 8708.93.6000, 8708.93.75, 8708.99.06, 8708.99.31, 8708.99.4960, 8708.99.50, 8708.99.5800, 8708.99.8080, 8803.10.00, 8803.20.00, 8803.30.00, 8803.90.30, and 8803.90.90.

The size or precision grade of a bearing does not influence whether the bearing is covered by the order. For a further discussion of the scope of the order being reviewed, including recent scope determinations, see *Antifriction Bearings (Other Than Tapered Roller Bearings) and Parts Thereof from France, Germany, Italy, Japan, Romania, Singapore, Sweden and the United Kingdom; Final Results of Antidumping Duty Administrative Reviews,* 63 FR 33320 (June 18, 1998). Although the HTS item numbers are provided for convenience and customs purposes, the written description of the scope of this proceeding remains dispositive.

Successorship

According to its July 16, 1999 submission, Tsubakimoto was the surviving company of its merger with Nakashima and is currently operating under the name Tsubaki-Nakashima Co. Since December 17, 1996, Tsubakimoto has been assigned a 7.77 percent antidumping duty cash deposit rate (see *Antifriction Bearings (Other Than Tapered Roller Bearings) and Parts Thereof from France, Germany, Italy, Japan, Romania, Singapore, Sweden and the United Kingdom; Final Results of Antidumping Duty Administrative Reviews,* 61 FR 66472 (December 17, 1996)). Thus Tsubaki-Nakashima requested that the Department make a determination that Tsubaki-Nakashima should receive the same antidumping duty treatment as the former Tsubakimoto with respect to ball bearings.

Upon examining the factors of: (1) Management; (2) production facilities; (3) supplier relationships; and (4) customer base, the Department has determined that the resulting operation of Tsubaki-Nakashima is the same as that of its predecessor, Tsubakimoto, and thus the Department has determined that Tsubaki-Nakashima is the successor-in-interest to Tsubakimoto for purposes of determining antidumping duty liability. For a complete discussion of the basis for this decision, see *Antifriction Bearings (Other Than Tapered Roller Bearings) and Parts Thereof From Japan; Initiation and Preliminary Results of Changed-Circumstances Antidumping Duty Administrative Review,* 64 FR 43341 (August 10, 1999).

Comments

Although we gave interested parties an opportunity to comment on the preliminary results, none were submitted.

Final Results of Review

We determine that Tsubaki-Nakashima is successor-in-interest to Tsubakimoto and, accordingly, Tsubaki-Nakashima will receive the same antidumping duty treatment as the former Tsubakimoto, *i.e.*, 7.77 percent antidumping duty cash deposit rate. We will instruct the U.S. Customs Service accordingly.

We are issuing and publishing this determination and notice in accordance with sections 751(b)(1) and 777(i)(1) of the Act and section 351.216 of the Department's regulations.

Dated: September 29, 1999.

Robert S. LaRussa,

Assistant Secretary For Import Administration.

[FR Doc. 99–26723 Filed 10–13–99; 8:45 am]

BILLING CODE 3510–DS–P

DEPARTMENT OF COMMERCE

International Trade Administration

[A–549–813]

1997/1998 Antidumping Duty Administrative Review of Canned Pineapple Fruit From Thailand

AGENCY: Import Administration, International Trade Administration, Department of Commerce.

ACTION: Notice of extension of time limit.

SUMMARY: The Department of Commerce is extending the time limit of the final results of the 1997/1998 antidumping duty administrative review of canned pineapple fruit from Thailand. This review covers the period July 1, 1997, through June 30, 1998.

EFFECTIVE DATE: October 14, 1999.

FOR FURTHER INFORMATION CONTACT: Cynthia Thirumalai or Gregory Campbell, AD/CVD Enforcement, Group I, Office 1, Import Administration, International Trade Administration, US Department of Commerce, 14th Street and Constitution Avenue, NW., Washington, DC 20230; telephone (202) 482–4087 or 482–2239, respectively.

SUPPLEMENTARY INFORMATION: The Department of Commerce is extending the time limit for completion of this administrative review until October 29, 1999, because it is not practicable to complete it within the original time limit, in accordance with section 751(a)(3)(A) of the Trade and Tariff Act of 1930, as amended by the Uruguay Round Agreements Act of 1994.

This extension is in accordance with section 751(a)(3)(A) of the Tariff Act of 1930, as amended (19 U.S.C. 1675 (a)(3)(A)).

Dated: October 4, 1999.

Richard W. Moreland,

Deputy Assistant Secretary, AD/CVD Enforcement Group I.

[FR Doc. 99–26841 Filed 10–13–99; 8:45 am]

BILLING CODE 3510–DS–P

DEPARTMENT OF COMMERCE

International Trade Administration

[A–570–820]

Certain Compact Ductile Iron Waterworks Fittings and Glands From the People's Republic of China: Preliminary Results of Antidumping Duty Administrative Review

AGENCY: Import Administration, International Trade Administration, Department of Commerce.

SUMMARY: The Department of Commerce (''the Department'') is conducting an administrative review of the antidumping duty order on Certain Compact Ductile Iron Waterworks Fittings and Glands (''CDIW'') from the People's Republic of China in response to requests by the respondent, Beijing Metals and Minerals Import and Export Corporation, and its Cheng Hong Foundry (collectively known as ''BMMIEC''). The period of review is September 1, 1997, through August 31, 1998.

We have preliminarily determined that U.S. sales of subject merchandise by BMMIEC have not been made below normal value. Since BMMIEC submitted full responses to the antidumping questionnaire and it has been established that it is sufficiently

independent, it is entitled to a separate rate.

If these preliminary results are adopted in our final results of administrative review, we will instruct the U.S. Customs Service to assess no antidumping duties on entries from BMMIEC.

Interested parties are invited to comment on these preliminary results.

EFFECTIVE DATE: October 14, 1999.

FOR FURTHER INFORMATION CONTACT: Lyman Armstrong, Jim Terpstra or Paige Rivas, AD/CVD Enforcement Group II, Office IV, Import Administration, International Trade Administration, U.S. Department of Commerce, 14th Street and Constitution Avenue, NW, Washington, DC 20230; telephone: (202) 482–3601, (202) 482–3965, or (202) 482–0651 respectively.

SUPPLEMENTARY INFORMATION:

Applicable Statute and Regulations

Unless otherwise indicated, all citations to the Tariff Act of 1930, as amended (the Act), are references to the provisions effective January 1, 1995, the effective date of the amendments made to the Act by the Uruguay Round Agreements Act. In addition, unless otherwise indicated, all citations to the Department's regulations are to the regulations at 19 CFR part 351 (1998).

Background

The Department received a request for review from BMMIEC on September 30, 1997. We published a notice of initiation of this review on October 29, 1997 (63 FR 58010).

On December 1, 1998, we issued an antidumping questionnaire to BMMIEC. The Department received responses to Section A on January 6, 1999 and Sections C and D on February 11, 1999.

We issued a supplemental questionnaire to BMMIEC on March 18, 1999. The response to this supplemental questionnaire was received on April 12, 1999. On April 27, 1999, the Department issued a second supplemental questionnaire to BMMIEC. The response to the second supplemental questionnaire was received on May 5, 1999.

Under section 751(a)(3)(A) of the Act, the Department may extend the deadline for issuing a preliminary determination in an administrative review if it determines that it is not practicable to complete the preliminary review within the statutory time limit of 245 days. On May 13, 1999, the Department published a notice of extension of the time limit for the preliminary results in this case to September 30, 1999. *See CDIW From the People's Republic of China: Antidumping Duty Administrative Review, Time Limit,* 64 FR 27960 (May 24, 1999).

In August 1999, BMMIEC submitted publicly available information and comments for consideration in valuing the factors of production. On August 16, 1999, BMMIEC submitted revised sales and factors of production data.

Scope of Review

The products subject to this antidumping duty order are (1) certain compact ductile iron waterworks (CDIW) fittings of 3 to 16 inches nominal diameter regardless of shape, including bends, tees, crosses, wyes, reducers, adapters, and other shapes, whether or not cement line, and whether or not covered with bitumen or similar substance, conforming to American Water Works Association/American National Standards Institute (AWWA/ANSI) specification C153/A21.53, and rated for water working pressure of 350 PSI; and (2) certain CDIW standard ductile iron glands for fittings in sizes 3 to 16 inches, conforming to AWWA/ANSI specification C111/A21.11 and rated for water working pressure of 350 PSI. All accessory packs (including accessory packs containing glands), are excluded from the scope of this order.

The types of CDIW fittings covered by this order are compact ductile iron mechanical joint waterworks fittings and compact ductile iron push-on joint waterwork fittings, both of which are used for the same application. CDIW fittings are used to join water main pressure pipes, valves, or hydrants in straight lines, and change, divert, divide, or direct the flow of raw and/or treated water in piping systems. CDIW fittings attach to the pipe, valve, or hydrant at a joint and are used principally for municipal water distribution systems. CDIW glands are used to join mechanical joint CDIW fittings to pipes.

CDIW fittings with nominal diameters greater than 16 inches, are specifically excluded from the scope of the order. Nonmalleable cast iron fittings (also called gray iron fittings) and full-bodied ductile fittings are also specifically excluded from the scope of this order. Nonmalleable cast iron fittings have little ductility and are generally rated only 150 to 250 PSI. Full-bodied ductile fittings have a longer body design than a compact fitting because in the compact design the straight section of the body is omitted to provide a more compact and less heavy fitting without reducing strength or flow characteristics. In addition, the full-bodied ductile fittings are thicker walled than the compact fittings. Full-bodied fittings are made of either gray iron or ductile iron, in sizes of 3 to 48 inches, conform to AWWA/ANSI specification C110/C21.10, and are rated to a maximum of only 250 PSI. In addition, compact ductile iron flanged fittings are excluded from the scope of this order, as they have significantly different characteristics and uses than CDIW fittings.

CDIW fittings are classifiable under subheading 7307.19.30.00 of the Harmonized Tariff Schedule of the United States (HTSUS). Standard ductile iron glands are classifiable under HTSUS subheading 7325.99.10.00. Although the HTSUS subheadings are provided for convenience and customs purposes, our written description of the scope of this order is dispositive.

Separate Rates

It is the Department's policy to assign all exporters of the merchandise subject to review in non-market-economy (NME) countries a single rate, unless an exporter can demonstrate an absence of government control, both in law and in fact, with respect to exports. To establish whether an exporter is sufficiently independent of government control to be entitled to a separate rate, the Department analyzes the exporter in light of the criteria established in the *Final Determination of Sales at Less Than Fair Value: Sparklers from the People's Republic of China,* 56 FR 20588 (May 6, 1991) (*Sparklers*), as amplified in the *Final Determination of Sales at Less Than Fair Value: Silicon Carbide from the People's Republic of China,* 59 FR 22585 (May 2, 1994) (*Silicon Carbide*). Evidence supporting, though not requiring, a finding of *de jure* absence of government control over export activities includes: (1) An absence of restrictive stipulations associated with an individual exporter's business and export licenses; (2) any legislative enactments decentralizing control of companies; and (3) any other formal measures by the government decentralizing control of companies. Evidence relevant to a *de facto* absence of government control with respect to exports is based on four factors, whether the respondent: (1) Sets its own export prices independent from the government and other exporters; (2) can retain the proceeds from its export sales; (3) has the authority to negotiate and sign contracts; and (4) has autonomy from the government regarding the selection of management. *See Silicon Carbide,* 59 FR at 22587; *see also Sparklers,* 56 FR at 20589.

BMMIEC responded to the Department's request for information regarding separate rates, by providing the requested documentation. We have determined that the evidence on the record demonstrates an absence of government control, both in law and in fact, with respect to BMMIEC's exports, in accordance with the criteria identified in *Sparklers* and *Silicon Carbide*. For further information, *see Separate Rates Memo* dated September 30, 1999. As a result, BMMIEC is entitled to a separate rate.

Export Price

We calculated EP in accordance with section 772(a) of the Act, because the subject merchandise was sold directly to the first unaffiliated purchaser in the United States prior to importation and constructed export price (CEP) methodology was not otherwise warranted, based on the facts of record. We calculated EP based on packed, CIF U.S. port, or FOB PRC port, prices to unaffiliated purchasers in the United States, as appropriate. We made deductions from the starting price, where appropriate, for ocean freight services which were provided by market economy suppliers. We also deducted from the starting price, where appropriate, an amount for foreign inland freight, foreign brokerage and handling. As these movement services were provided by NME suppliers, we valued them using Indian rates. *See* ''Normal Value'' section below for further discussion.

Normal Value

Section 773(c)(1) of the Act provides that the Department shall determine the normal value (NV) using a factors-of-production methodology if: (1) The merchandise is exported from an NME country; and (2) the information does not permit the calculation of NV using home-market prices, third-country prices, or constructed value under section 773(a) of the Act.

The Department has treated the PRC as an NME country in all previous antidumping cases. In accordance with section 771(18)(C)(i) of the Act, any determination that a foreign country is an NME country shall remain in effect until revoked by the administering authority. None of the parties to this proceeding has contested such treatment in this review. Therefore, we treated the PRC as an NME country for purposes of this review. Furthermore, available information does not permit the calculation of NV using home market prices, third country prices, or constructed value under section 773(a) of the Act. As a result, we calculated NV by valuing the factors of production in a comparable market economy country which is a significant producer of comparable merchandise.

Section 773(c)(4) of the Act and 19 CFR 351.408 direct us to select a surrogate country that is economically comparable to the PRC. On the basis of per capita gross domestic product (GDP), the growth rate in per capita GDP, and the national distribution of labor, we find that India is a comparable economy to the PRC. *See Memorandum from Director, Office of Policy, to Office Director, AD/CVD Group II, Office IV*, dated May 21, 1999.

Section 773(c)(4) of the Act also requires that, to the extent possible, the Department use a surrogate country that is a significant producer of merchandise comparable to CDIW. For purposes of the LTFV investigation, we found that India was a significant producer of comparable merchandise. *See Notice of Final Determination of Sales at Less Than Fair Value: CDIW Fittings and Accessories from the People's Republic of China*, 58 FR 37908 (July 14, 1993) (*CDIW Final Determination*). For purposes of this administrative review, we find that India is a producer of CDIW based on information submitted by the respondents in their August 1999 submission. Therefore, we have continued to use India as the surrogate country and have used publicly available information relating to India, unless otherwise noted, to value the various factors of production.

For purposes of calculating NV, we valued PRC factors of production, in accordance with section 773(c)(1) of the Act. Factors of production include, but are not limited to: hours of labor employed; quantities of raw materials required; amounts of energy and other utilities consumed; and representative capital cost, including depreciation. In examining surrogate values, we selected, where possible, the publicly available value which was: an average non-export value; representative of a range of prices within the POR or most contemporaneous with the POR; product-specific; and tax-exclusive. For a more detailed explanation of the methodology used in calculating various surrogate values, *see Preliminary Results Factors Valuation Memorandum from the Team to the File*, dated September 30, 1999 (*Factors Memorandum*). In accordance with this methodology, we valued the factors of production as follows:

To value sand, bentonite, and graphite, we relied on import prices contained in the September and November 1997, as well as the March 1998, issues of *Indian Import Statistics*. For pig iron, ferrosilicon, limestone, and perlite, we used the import prices contained in the September and November 1997, as well as the March 1998 issues of *Indian Import Statistics*. For ferrosilico manganese, we relied on import prices contained in the September 1997 and March 1998 issues of *Indian Import Statistics*. For coke (hard), we used the November 1997 issue of *Indian Import Statistics*. For firewood and cement, we relied on import prices contained in the April 1997 through March 1998 issues of *Indian Import Statistics*. For those values not contemporaneous with the POR, we adjusted for inflation using the wholesale price indices (WPI) published by the International Monetary Fund (IMF). We made further adjustments to account for freight costs between the suppliers and BMMIEC's manufacturing facilities.

In accordance with our practice, we added to CIF import values from India a surrogate freight cost using the shorter of the reported distances from either the closest PRC port to the factory, or from the domestic supplier to the factory. *See Final Determination of Sales at Less Than Fair Value: Certain Cut-to-Length Carbon Steel Plate From the People's Republic of China*, 62 FR 61977 (November 20, 1997).

We valued labor based on a regression-based wage rate, in accordance with 19 CFR 351.408(c)(3).

For electricity, we relied upon public information from the 1995 edition of *IEA Energy Prices and Taxes* to obtain an average price for electricity provided to industries in India. We adjusted the values to reflect inflation up to the POR using the WPI published by the IMF.

For the reported packing materials (*i.e.*, bituminous pitch, steel angles and straps, and welding rod), we relied upon Indian import data in the April 1997 through March 1998 issues of *Indian Import Statistics*. We adjusted the values to reflect inflation up to the POR using the WPI published by the IMF. Additionally, we adjusted these values to account for freight costs incurred between the suppliers and BMMIEC.

For foreign inland freight, we used the August 1998 truck rate from *Rahul Roadlines*. For foreign brokerage and handling, we used the average of the rates reported in the questionnaire response in the antidumping duty investigation of Stainless Steel Wire Rod From India. *See Certain Stainless Steel Wire Rod from India; Preliminary Results of Antidumping Duty Administrative and New Shipper Review*. 63 FR 48184 (September 9, 1998); *Factors Memorandum*. We adjusted the values to reflect inflation

up to the POR using the WPI published by the IMF.

For factory overhead (FOH), selling, general, and administrative expenses (SG&A), and profit, we relied on the 1997 financial statements of Jayaswal Neco, Ltd, an Indian producer of certain compact ductile iron waterworks fittings and glands, which were submitted by the respondents, because this company is a producer of subject merchandise.

Preliminary Results of the Review

We preliminarily determine that the following *de minimis* margin exists for the period September 1, 1997 through August 31, 1998:

Manufacturer/exporter	Margin (percent)
Beijing Metals and Minerals Import and Export Corporation	.09

Interested parties may request a hearing within 30 days of publication of this notice. *See* 19 CFR 351.310(c). Any hearing, if requested, will be held 44 days after the date of the publication of this notice or the first workday thereafter. Interested parties may submit case briefs within 30 days of publication. Rebuttal briefs, limited to issues raised in the case briefs, may be filed no later than 35 days after the date of publication. Parties who submit case briefs or rebuttal briefs in this proceeding are requested to submit with each argument (1) a statement of the issue and (2) a brief summary of the argument. Parties are also encouraged to provide a summary of the arguments not to exceed five pages and a table of statutes, regulations, and cases cited.

The Department will subsequently issue the final results of this administrative review, including the results of its analysis of issues raised in any such written briefs or at a hearing, not later than 120 days after the date of publication of this notice.

The Department shall determine, and the Customs Service shall assess, antidumping duties on all appropriate entries. Upon completion of this review, the Department will issue appraisement instructions directly to the U.S. Customs Service.

Furthermore, the following deposit requirements will be effective upon publication of the final results of this antidumping duty administrative review for all shipments of the subject merchandise entered, or withdrawn from warehouse, for consumption on or after the publication date, as provided by section 751(a)(1) of the Act: (1) For BMMIEC, which has a separate rate, the cash deposit rate will be zero; (2) for any previously reviewed PRC and non-PRC exporter with a separate rate (including those companies and products where we terminated the review), the cash deposit rate will be the company- and product-specific rate established for the most recent period; (3) the cash deposit rate for non-PRC exporters of subject merchandise from the PRC will be the rate applicable to the PRC supplier of that exporter; and (4) the cash deposit rate for all other PRC exporters will continue to be 127.38 percent, the PRC-wide rate established in the LTFV investigation. These requirements, when imposed, shall remain in effect until publication of the final results of the next administrative review.

This notice serves as a preliminary reminder to importers of their responsibility under 19 CFR 351.402(f) to file a certificate regarding the reimbursement of antidumping duties prior to liquidation of the relevant entries during this review period. Failure to comply with this requirement could result in the Secretary's presumption that reimbursement of antidumping duties occurred and the subsequent assessment of double antidumping duties.

This administrative review is issued and published in accordance with sections 751(a)(1) and 777(i)(1) of the Act.

Dated: September 30, 1999.

Robert La Russa,

Assistant Secretary for Import Administration.

[FR Doc. 99–26721 Filed 10–13–99; 8:45 am]

BILLING CODE 3510–DS–P

DEPARTMENT OF COMMERCE

International Trade Administration

[A–580–839, A–583–833]

Notice of Postponement of Preliminary Antidumping Duty Determinations: Certain Polyester Staple Fiber from the Republic of Korea and Taiwan

AGENCY: Import Administration, International Trade Administration, Department of Commerce.

EFFECTIVE DATE: October 14, 1999.

FOR FURTHER INFORMATION CONTACT: Vincent Kane (Republic of Korea) or Alysia Wilson (Taiwan), AD/CVD Enforcement, Group I, Office 1, Import Administration, U.S. Department of Commerce, Room 1870, 14th Street and Constitution Avenue, NW, Washington, DC 20230; telephone (202) 482–2815 or 482–0108, respectively.

Postponement of Preliminary Determinations

On April 29, 1999, the Department of Commerce (the Department) published its notice of initiation of antidumping investigations of certain polyester staple fiber from the Republic of Korea and Taiwan. *See Initiation of Antidumping Duty Investigations: Certain Polyester Staple Fiber from the Republic of Korea and Taiwan,* 64 FR 23053. The initiation notice stated that we would issue our preliminary determinations by September 9, 1999. On August 25, 1999, at the request of E.I. DuPont de Nemours, Inc.; Arteva Specialities S.a.r.l., d/b/a KoSa; Wellman, Inc.; and Intercontinental Polymers, Inc. (hereinafter collectively referred to as ''the petitioners'' [1]), the Department extended the preliminary determinations until no later than September 29, 1999. *See Notice of Postponement of Preliminary Antidumping Duty Determinations: Certain Polyester Staple Fiber from the Republic of Korea and Taiwan,* 64 FR 47766 (September 1, 1999). On September 29, 1999, at the request of petitioners, the Department extended the preliminary determinations until no later than October 4, 1999.[2]

Based on petitioners' September 29, 1999 request, we are further extending the determinations in these investigations until no later than October 29, 1999.

This extension and notice are in accordance with section 733(c) of the Act.

Dated: October 4, 1999.

Richard W. Moreland,

Deputy Assistant Secretary for Import Administration.

[FR Doc. 99–26722 Filed 10–13–99; 8:45 am]

BILLING CODE 3510–DS–P

DEPARTMENT OF COMMERCE

International Trade Administration

Corrected Preliminary Results of Full Sunset Review: Industrial Phosphoric Acid from Israel [C–508–605]

AGENCY: Import Administration, International Trade Administration, Department of Commerce.

ACTION: Notice of Correction to Preliminary Results of Full Sunset

[1] E.I. DuPont de Nemours, Inc. is not a petitioner in the Taiwan case.

[2] At the time this notice was prepared, the postponement of the preliminary determination until October 4, 1999 had not yet been published in the **Federal Register**.

Review: Industrial Phosphoric Acid from Israel.

SUMMARY: On September 27, 1999, the Department of Commerce (''the Department'') published in the **Federal Register** (64 FR 51954) the preliminary results of the March 1999 sunset review of the countervailing duty order on industrial phosphoric acid from Israel. Subsequent to the publication of the preliminary results, we identified an inadvertent omission from the ''Preliminary Results Section of Review'' section of the notice. Therefore, we are correcting this inadvertent error.

On page 51958, after the list of countervailable subsidy rates, the following paragraph was inadvertently excluded: ''Any interested party may request a hearing within 30 days of publication of this notice in accordance with 19 CFR 351.310(c). Any hearing, if requested, will be held on November 26, 1999, in accordance with 19 CFR 351.310(d). Interested parties may submit case briefs no later than November 16, 1999, in accordance with 19 CFR 351.309(c)(1)(i). Rebuttal briefs, which must be limited to issues raised in the case briefs, may be filed not later than November 23, 1999. The Department will issue a notice of final results of this sunset review, which will include the results of its analysis of issues raised in any such comments, no later than January 25, 2000, in accordance with section 751(c)(5)(B) of the Act.[1]

EFFECTIVE DATE: October 14, 1999.

FOR FURTHER INFORMATION CONTACT: Kathryn B. McCormick or Melissa G. Skinner, Office of Policy for Import Administration, International Trade Administration, U.S. Department of Commerce, 14th Street & Constitution Avenue, NW, Washington, D.C. 20230: telephone (202) 482–1698 and (202) 482–1560, respectively.

This amendment is issued and published in accordance with sections 751(h) and 7777(i) of the Act.

Dated: October 7, 1999.

Robert S. LaRussa,

Assistant Secretary for Import Administration.

[FR Doc. 99–26842 Filed 10–13–99; 8:45 am]

BILLING CODE 3510–DS–P

[1] *See Industrial Phosphoric Acid from Israel (C–508–605) and Industrial Phosphoric Acid from Belgium (A–423–602): Extension of Time Limit for Final Results of Five-Year Reviews,* 64 FR 34189 (June 25, 1999).

DEPARTMENT OF COMMERCE

Evaluation of Coastal Zone Management Programs and National Estuarine Research Reserves

AGENCY: Office of Ocean and Coastal Resource Management, National Ocean Service, National Oceanic and Atmospheric Administration (NOAA), DOC.

ACTION: Notice of intent to evaluate.

SUMMARY: The NOAA Office of Ocean and Coastal Resource Management (OCRM) announces its intent to evaluate the performance of the Virginia and Alabama Coastal Zone Management Programs and the North Inlet/Winyah Bay National Estuarine Research Reserve.

These evaluations will be conducted pursuant to sections 312 and 315 of the Coastal Zone Management Act of 1972 (CZMA), as amended. The CZMA requires a continuing review of the performance of states with respect to coastal program and research reserve program implementation. Evaluation of Coastal Zone Management Programs and National Estuarine Research Reserves require findings concerning the extent to which a state has met the national objectives, adhered to its coastal program document or the Reserve's final management plan approved by the Secretary of Commerce, and adhered to the terms of financial assistance awards funded under the CZMA. The evaluations will include a site visit, consideration of public comments, and consultations with interested Federal, State, and local agencies and members of the public. Public meetings are held as part of the site visits.

Notice is hereby given of the dates of the site visits for the listed evaluations, and the dates, local times, and locations of public meetings during the site visits.

The Virginia Coastal Zone Management Program evaluation site visit will be from November 15–19, 1999. One public meeting will be held during the week. The public meeting will be held on Monday, November 15, 1999, at 7:00 P.M., in the House Room C of the General Assembly Building, 910 Capitol Street, Richmond, Virginia 23219.

The Alabama Coastal Zone Management Program evaluation site visit will be from November 15–19, 1999. One public meeting will be held during the week. The public meeting will be held on Wednesday, November 17, 1999, at 6:00 P.M., in the Killian Room of the International Trade Center, 250 North Water Street, Mobile, Alabama.

The North Inlet/Winyah Bay National Estuarine Research Reserve in South Carolina site visit will be from November 29–December 3, 1999. One public meeting will be held during the week. The public meeting will be held on Wednesday, December 1, 1999, at 7:00 P.M., in the Kimbel Lodge Conference Center on Route 17, one mile north of the Georgetown Bridges and near the entrance to the Hobcaw Barony Refuge, in Georgetown, South Carolina.

The States will issue notice of the public meeting(s) in a local newspaper(s) at least 45 days prior to the public meeting(s), and will issue other timely notices as appropriate.

Copies of the State's most recent performance reports, as well as OCRM's notifications and supplemental request letters to the States, are available upon request from OCRM. Written comments from interested parties regarding these Programs are encouraged and will be accepted until 15 days after the public meeting. Please direct written comments to Margo E. Jackson, Deputy Director, Ocean and Coastal Resource Management, NOS/NOAA, 1305 East-West Highway, 10th Floor, Silver Spring, Maryland 20910. When the evaluation is completed, OCRM will place a notice in the **Federal Register** announcing the availability of the Final Evaluation Findings.

FOR FURTHER INFORMATION CONTACT: Margo E. Jackson, Deputy Director, Office of Ocean and Coastal Resource Management, NOS/NOAA, 1305 East-West Highway, Silver Spring, Maryland 20910, (301) 713–3155, Extension 114.

(Federal Domestic Assistance Catalog 11.419 Coastal Zone Management Program Administration)

Capt Ted Lillestolen,

Deputy Assistant Administrator for Ocean Services and Coastal Zone Management.

[FR Doc. 99–26748 Filed 10–13–99; 8:45 am]

BILLING CODE 3510–08–M

DEPARTMENT OF COMMERCE

National Oceanic and Atmospheric Administration

[I.D. 100599G]

Gulf of Mexico Fishery Management Council; Public Meetings

AGENCY: National Marine Fisheries Service (NMFS), National Oceanic and Atmospheric Administration (NOAA), Commerce.

ACTION: Notice of public meetings.

SUMMARY: The Gulf of Mexico Fishery Management Council (Council) will

convene public meetings of the Standing and Special Red Drum Scientific and Statistical Committee (SSC) and the Red Drum Advisory Panel (AP).

DATES: The Standing and Special Red Drum SSC will meet on Thursday, October 28 1999, beginning at 10:00 a.m. and will conclude by 3:00 p.m.; and the Red Drum AP will meet on Friday, October 29, 1999, at 8:00 a.m. until 3:00 p.m.

ADDRESSES: Both meetings will be held at the Tampa Airport Hilton Hotel, 2225 Lois Avenue, Tampa, FL 33607; telephone: 813–877–6688.

FOR FURTHER INFORMATION CONTACT: Peter Hood, Fishery Biologist Gulf of Mexico Fishery Management Council, 3018 U.S. Highway 301 North, Suite 1000, Tampa, FL 33619; telephone: 813–228–2815.

SUPPLEMENTARY INFORMATION: The Standing & Special Red Drum SSC will review the 1999 red drum stock assessment. A Red Drum Stock Assessment Panel (SAP) member will present the assessment to the SSC related to setting an allowable biological catch (ABC) range in the Gulf of Mexico. The SSC may also review estimates of stock size (biomass at maximum sustainable yield [Bmsy]), minimum stock size thresholds (MSST), escapement rates of juveniles to offshore waters, and adult red drum bycatch in shrimp trawls. Based on this review, the SSC may recommend to the Council levels for total allowable catch (TAC), bag limits, size limits, commercial quotas, and other measures for the red drum fishery.

The Red Drum AP will meet to review the 1999 red drum stock assessment. A Red Drum Stock Assessment Panel member will also present the assessment to the AP. The AP will also provide recommendations to the Council.

Based on recommendations from the above meetings, the Council, at its November meeting in Orlando, FL will decide if changes are needed to current red drum management measures. Currently, it is illegal to harvest or possess red drum in Federal waters.

A copy of the agenda can be obtained by contacting the Gulf Council (SEE **ADDRESSES**).

Although non-emergency issues not on the agendas may come before the Standing and Special Red Drum SSC and the Red Drum AP for discussion, in accordance with the Magnuson-Stevens Fishery Conservation and Management Act, those issues may not be the subject of formal action during these meetings. Actions of the Standing and Special Reef Fish SSC and the Red Drum AP will be restricted to those issues specifically identified in the agendas and any issues arising after publication of this notice that require emergency action under Section 305(c) of the Magnuson-Stevens Act, provided the public has been notified of the Council's intent to take action to address the emergency.

Special Accommodations

This meeting is physically accessible to people with disabilities. Requests for sign language interpretation or other auxiliary aids should be directed to Anne Alford at the Council (see **ADDRESSES**) by October 21, 1999.

Dated: October 7, 1999.

Bruce C. Morehead,

Acting Director, Office of Sustainable Fisheries, National Marine Fisheries Service.

[FR Doc. 99–26840 Filed 10–13–99; 8:45 am]

BILLING CODE 3510–22–F

DEPARTMENT OF DEFENSE

Department of the Army

Notice of Prospective Grant of Exclusive Patent License

AGENCY: U.S. Army Soldier and Biological Chemical Command, U.S. Army, DoD.

ACTION: Notice.

SUMMARY: In accordance with the provisions of 15 U.S.C. 209(c)(1) and 37 CFR 404.7(a)(1)(I), SBCCOM hereby gives notice that it is contemplating the grant of an exclusive license in the United States to practice the invention embodied in Invention Disclosure NA–1168 entitled, ''Non-Standard Method of Design and Construction of Round Parachutes'' to Capewell Components Co., L.L.C. having a place of business in South Windsor, Connecticut.

FOR FURTHER INFORMATION CONTACT: Mr. Vincent J. Ranucci, Patent Counsel at U.S. Army Soldier and Biological Chemical Command, 15 Kansas Street, Natick, MA 01760–5035, Phone: (508) 233–4510 or E-mail:vranucci@natick-emh2.army.mil.

SUPPLEMENTARY INFORMATION: The prospective exclusive license will be royalty bearing and will comply with the terms and conditions of 35 U.S.C. 209 and 37 CFR 404.7. The prospective exclusive license may be granted, unless within sixty days from the date of this published Notice, SBCCOM receives written evidence and argument to establish that the grant of the license would not be consistent with the requirements of 35 U.S.C. 209 and 37 CFR 404.7.

The invention described in Disclosure NA–1168 reduces weight and bulk of a round parachute and reduces manufacturing costs.

Gregory D. Showalter,

Army Federal Register Liaison Officer.

[FR Doc. 99–26821 Filed 10–13–99; 8:45 am]

BILLING CODE 3710–08–M

DEPARTMENT OF EDUCATION

[CFDA No.: 84.275A]

National Clearinghouse of Rehabilitation Training Materials: Notice Inviting Applications for New Awards for Fiscal Year (FY) 2000

Purpose of Program: The Rehabilitation Training program supports projects to ensure skilled personnel are available to provide rehabilitation services to individuals with disabilities through vocational, medical, social, and psychological rehabilitation programs, through supported employment programs, through independent living services programs, and through client assistance programs. The program supports projects to maintain and upgrade basic skills and knowledge of personnel employed to provide state-of-the-art service delivery system and rehabilitation technology services.

Eligible Applicants: State agencies and public or nonprofit agencies and organizations, including Indian Tribes and institutions of higher education, are eligible for assistance under the Rehabilitation Training program.

Deadline for Transmittal of Applications: December 10, 1999.

Deadline for Intergovernmental Review: February 9, 2000.

Applications Available: October 14, 1999.

Estimated Available Funds: $300,000.

Estimated Range of Award: $250,000 to $300,000.

Estimated Average Size of Award: $275,000.

Maximum Award: In no case does the Secretary make an award greater than $300,000 for a single budget period of 12 months. The Secretary rejects and does not consider an application that proposes a budget exceeding this maximum amount.

Estimated Number of Awards: 1.

Note: The Department is not bound by any estimates in this notice.

Project Period: Up to 60 months.

Page Limit: Part III of the application, the application narrative, is where you,

the applicant, address the selection criteria used by reviewers in evaluating the application. You must limit Part III to the equivalent of no more than 35 pages, using the following standards:

(1) A page is 8.5″ x 11″, on one side only with 1″ margins at the top, bottom, and both sides.

(2) You must double space (no more than three lines per vertical inch) all text in the application narrative, including titles, headings, footnotes, quotations, references, and captions, as well as all text in charts, tables, figures, and graphs.

If you use a proportional computer font, you must use a font that is at least 12-point in height and no more than 18 characters per inch in width. If you use a nonproportional font or a typewriter, you may not use more than 12 characters per inch.

The page limit does not apply to Part I, the cover sheet; Part II, the budget section, including the narrative budget justification; Part IV, the assurances and certifications; or the one-page abstract, the resumes, the bibliography, or the letters of support. However, you must include all of the application narrative in Part III.

If, in order to meet the page limit, you use print size, spacing, or margins smaller than the standards specified in this notice, we won't consider your application for funding.

Applicable Regulations: (a) The Education Department General Administrative Regulations (EDGAR) in 34 CFR parts 74, 75, 77, 79, 80, 81, 82, 85, and 86; and (b) The regulations for this program in 34 CFR part 385, except § 385.31.

Priority: This competition focuses on projects designed to meet the priority in the notice of final priorities for this program, published in the **Federal Register** on December 5, 1994 (59 FR 62502). This priority is as follows: *National Clearinghouse of Rehabilitation Training Materials.*

The projects must—

- Demonstrate experience and capacity to provide for a national clearinghouse of rehabilitation training materials;
- Identify and gather rehabilitation information and training materials for use in preparing pre-service and in-service education and training for rehabilitation personnel;
- Disseminate, in a cost-effective manner, rehabilitation information and state-of-the-art training materials and methods to rehabilitation personnel to assist them in achieving improved outcomes in vocational rehabilitation, supported employment, and independent living; and
- Provide linkages and policies for the exchange of information and referral of inquiries with other existing clearinghouses and information centers supported by the U.S. Department of Education, including the Education Resources Information Center and the National Rehabilitation Information Center.

For FY 2000 this priority is an absolute priority. Under 34 CFR 75.105(c)(3), we consider only applications that meet the priority.

Selection Criteria: In evaluating an application for a new grant under this competition, the Secretary uses selection criteria chosen from the general selection criteria in 34 CFR 75.210 of EDGAR. The selection criteria to be used for this competition will be provided in the application package for this competition.

For Applications Contact: Education Publications Center (ED Pubs), P.O. Box 1398, Jessup, MD 20794–1398. Telephone (toll free): 1–877–433–7827. FAX: (301) 470–1244. If you use a telecommunications device for the deaf (TDD), you may call (toll free): 1–877–576–7734. You may also contact ED Pubs via its Web site (http://www.ed.gov/pubs/edpubs.html) or its E-mail address (edpubs@inet.ed.gov).

Individuals with disabilities may obtain a copy of this application package in an alternate format by contacting the Grants and Contracts Services Team, U.S. Department of Education, 400 Maryland Avenue, SW., room 3317, Switzer Building, Washington, DC 20202–2550. Telephone: (202) 205–8351. If you use a telecommunications device for the deaf (TDD), you may call the Federal Information Relay Service (FIRS) at 1–800–877–8339. However, the Department is not able to reproduce in an alternate format the standard forms included in the application package.

FOR FURTHER INFORMATION CONTACT: Sylvia Johnson, U.S. Department of Education, 400 Maryland Avenue, SW., room 3318, Switzer Building, Washington, DC 20202–2649. Telephone: (202) 205–9312. If you use a telecommunications device for the deaf (TDD), you may call the Federal Information Relay Service (FIRS) at 1–800–877–8339.

Individuals with disabilities may obtain this document in an alternate format (*e.g.*, Braille, large print, audiotape, or computer diskette) on request to the contact person listed in the preceding paragraph.

Electronic Access to This Document

You may view this document, as well as all other Department of Education documents published in the **Federal Register**, in text or Adobe Portable Document Format (PDF) on the Internet at either of the following sites:

http://ocfo.ed.gov/fedreg.htm
http://www.ed.gov/news.html

To use the PDF you must have the Adobe Acrobat Reader Program with Search, which is available free at either of the previous sites. If you have questions about using the PDF, call the U.S. Government Printing Office (GPO), toll free, at 1–888–293–6498; or in the Washington, DC, area at (202) 512–1530.

Note: The official version of a document is the document published in the **Federal Register**. Free Internet access to the official edition of the **Federal Register** and the Code of Federal Regulations is available on GPO Access at:

http://www.access.gpo.gov/nara/index.html

Program Authority: 29 U.S.C. 772.

Dated: October 8, 1999.

Curtis L. Richards,

Acting Assistant Secretary for Special Education and Rehabilitative Services.

[FR Doc. 99–26819 Filed 10–13–99; 8:45 am]

BILLING CODE 4000–01–P

DEPARTMENT OF ENERGY

Office of Science; DOE/NSF Nuclear Science Advisory Committee Renewal

Pursuant to Section 14(a)(2)(A) of the Federal Advisory Committee Act and in accordance with title 41 of the Code of Federal Regulations, Section 101–6.1015, and following consultation with the Committee Management Secretariat, General Services Administration, notice is hereby given that the DOE/NSF Nuclear Science Advisory Committee has been renewed for a two-year period beginning in October 1999. The Committee will provide advice to both the Department of Energy and the National Science Foundation on scientific priorities within the field of basic nuclear science research.

The Secretary has determined renewal of the DOE/NSF Nuclear Science Advisory Committee is essential to the conduct of the Department's business and in the public interest in connection with the performance of duties imposed upon the Department of Energy by law. The Committee will continue to operate in accordance with the provisions of the Federal Advisory Committee Act, the Department of Energy Organization Act (Public Law 95–91), and rules and regulations issued in implementation of those Acts.

Further information regarding this advisory committee can be obtained from Rachel Samuel at (202) 586–3279.

Issued in Washington, DC on October 7, 1999.

James N. Solit,

Advisory Committee Management Officer.

[FR Doc. 99–26874 Filed 10–13–99; 8:45 am]

BILLING CODE 6450–01–P

DEPARTMENT OF ENERGY

Golden Field Office; Broad Based Solicitation for Submission of Financial Assistance Applications Involving Research, Development and Demonstration for the Office of Energy Efficiency and Renewable Energy

AGENCY: U.S. Department of Energy.

ACTION: Broad Based Solicitation for Submission of Financial Assistance Applications Involving Research, Development and Demonstration DE–PS36–00GO10482.

SUMMARY: The U.S. Department of Energy (DOE), pursuant to the DOE Financial Assistance Rules, 10 CFR 600.8, is announcing its intention to solicit applications for research, development and demonstration.

DATES: DOE expects to issue the first part of the Solicitation on or about October 19, 1999.

ADDRESSES: Copies of the Solicitation and Supplemental Announcements, once issued, can be obtained from the Golden Field Office Home page at http://www.eren.doe.gov/golden/solicitations.html. It is DOE's intention not to issue hard copies of the Solicitation.

SUPPLEMENTARY INFORMATION: The DOE Office of Energy Efficiency and Renewable Energy (EERE) has a continuing interest in receiving applications for grants and cooperative agreements supporting renewable energy and energy efficiency basic research, directed and applied research, cooperative demonstrations, and related activities. The Broad Based Solicitation will provide specific information and will consist of two parts: the first is generic and will consist of guidelines and requirements for submitting applications; the second part will be specific to particular technology areas of interest and will consist of individual Supplemental Announcements issued at a later date. These Supplemental Announcements will contain technology specific information, anticipated programmatic funding levels, eligibility requirements, evaluation criteria, any cost sharing requirements, application deadlines, and any other requirements specific to the Supplemental Announcements. Notices of release of the Supplemental Announcements will be published separately in the **Federal Register** as they become available. All information regarding the Solicitation will be posted on the DOE Golden Field Office Home page at the address identified above.

FOR FURTHER INFORMATION CONTACT: Ruth E. Adams, Contracting Officer, at 303–275–4722, e-mail ruth__adams@nrel.gov.

Issued in Golden, Colorado, on October 5, 1999.

Jerry L. Zimmer,

Procurement Director, GO.

[FR Doc. 99–26788 Filed 10–13–99; 8:45 am]

BILLING CODE 6450–01–P

DEPARTMENT OF ENERGY

Environmental Management Site-Specific Advisory Board, Paducah

AGENCY: Department of Energy.

ACTION: Notice of open meeting correction.

On October 6, 1999, the Department of Energy published a notice of open meeting announcing a meeting of the Environmental Management Site-Specific Advisory Board, Paducah 64 FR 54281. In that notice, the meeting was scheduled for October 21, 1999 at 6:00 p.m.–8:30 p.m. Today's notice is announcing that the meeting will be starting at 5:30 p.m.–8:30 p.m.

Issued in Washington, DC on October 7, 1999.

Rachel M. Samuel,

Deputy Advisory Committee Management Officer.

[FR Doc. 99–26789 Filed 10–13–99; 8:45 am]

BILLING CODE 6450–01–P

DEPARTMENT OF ENERGY

Office of Fossil Energy; National Coal Council Advisory Committee

AGENCY: Department of Energy.

ACTION: Notice of open meeting.

SUMMARY: This notice announces a meeting of the National Coal Council Advisory Committee. Federal Advisory Committee Act (Public Law 92–463, 86 Stat. 770) requires notice of these meetings be announced in the **Federal Register**.

DATE: Tuesday, November 9, 1999, 9 a.m. to 12 p.m.

ADDRESSES: Hotel Washington, 515 15th Street, NW, Washington, DC.

FOR FURTHER INFORMATION CONTACT: Margie D. Biggerstaff, U.S. Department of Energy, Office of Fossil Energy, Washington, DC 20585. Phone: 202/586–3867.

SUPPLEMENTARY INFORMATION:

Purpose of the Committee: To provide advice, information, recommendations to the Secretary of Energy on matters relating to coal and coal industry issues.

Tentative Agenda

- Call to order E. Linn Draper, Jr., Chairman.
- Administrative business.
- Remarks by Secretary of Energy, Bill Richardson (invited).
- Remarks by Senator Larry Craig (R-ID).
- Report by James K. Martin, Chairman of Council Study Working Group, on Progress of Council's Current Study on Carbon Sequestration.
- Presentation by Daman S. Walia, President/CEO, ARCTECH, Inc., on Coal Bioconversion Technology.
- Summary of the United Nations Climate Change Negotiations, Conference of Parties Fifth Meeting.
- Presentation by Roger H. Bezdek, President, Management Information Services, on J. D. Power & Associates Public Opinion Survey on Electricity Issues.
- Other business.
- Adjournment.

Public Participation: The meeting is open to the public. The Chairperson of the Committee will conduct the meeting to facilitate the orderly conduct of business. If you would like to file a written statement with the Committee, you may do so either before or after the meeting. If you would like to make oral statements regarding any of the items on the agenda, you should contact Margie D. Biggerstaff at the address or telephone number listed above. You must make your request for an oral statement at least five business days prior to the meeting, and reasonable provisions will be made to include the presentation on the agenda. Public comment will follow the 10-minute rule.

Transcripts: The transcript will be available for public review and copying within 30 days at the Freedom of Information Public Reading Room, 1E–190, Forrestal Building, 1000 Independence Avenue, SW, Washington, DC, between 9:00 a.m. and 4:00 p.m., Monday through Friday, except Federal holidays.

Issued in Washington, DC on October 8, 1999.

Rachel M. Samuel,

Deputy Advisory Committee Management Officer.

[FR Doc. 99–26875 Filed 10–13–99; 8:45 am]

BILLING CODE 6450–01–P

DEPARTMENT OF ENERGY

Federal Energy Regulatory Commission

[Docket No. RP00–18–000]

Indicated Shippers v. Natural Gas Pipeline Company of America; Notice of Complaint

October 8, 1999.

Take notice that on October 7, 1999, pursuant to Rule 206 of the Commission's Rules of Practice and Procedure (18 CFR 385.206, Amoco Energy Trading Corporation and Amoco Production Company and Burlington Resources Oil & Gas Company (Indicated Shippers) filed a Section 5 complaint against Natural Gas Pipeline Company of America (NGPL), requesting the Commission to find that NGPL's auction procedures violate its tariff, Commission regulations and Commission precedent and to order NGPL to revise such procedures.

Specifially, the Indicated Shippers assert that NGPL's currently pending capacity auction (No. AM9909–6) violates its tariff because it creates an undue preference for Negotiated Rate bids, impermissible bundling of noncontiguous capacity, discriminates against Resource Rate bidders and improperly restricts capacity release rights.

Any person desiring to be heard or to protest this filing should file a motion to intervene or protest with the Federal Energy Regulatory Commission, 888 First Street, NE, Washington, DC 20426, in accordance with Rules 211 and 214 of the Commission's Rules of Practice and Procedure (18 CFR 385.211 and 285.214). All such motions or protests must be filed on or before October 15, 1999. Protests will be considered by the Commission in determining the appropriate action to be taken, but will not serve to make protestants parties to the proceeding. Any person wishing to become a party must file a motion to intervene. Copies of this filing are on file with the Commission and are available for public inspection in the Public Reference Room. This filing may also be viewed on the Internet at http://www.ferc.fed.us/online/rims.htm (call 202–208–2222) for assistance. Answers to the complaint shall also be due on or before October 15, 1999.

Linwood A. Watson, Jr.,

Acting Secretary.

[FR Doc. 99–26876 Filed 10–13–99; 8:45 am]

BILLING CODE 6717–01–M

DEPARTMENT OF ENERGY

Federal Energy Regulatory Commission

[Docket No. CP00–1–000]

Carnegie Interstate Pipeline Company; Notice of Request Under Blanket Authorization

October 7, 1999.

Take notice that on October 1, 1999, Carnegie Interstate Pipeline Company (CIPCO), 800 Regis Avenue, Pittsburgh, Pennsylvania 15236, filed in Docket No. CP00–1–000 a request pursuant to Sections 157.205, 157.208 and 157.211 of the Commission's Regulations under the Natural Gas Act (18 CFR 157.205, 157.208 and 157.211) for authorization to construct and operate certain facilities to provide new service to an end-user of natural gas, and to increase the Maximum Allowable Operating Pressure (MAOP) of one segment of a delivery lateral, under CIPCO's blanket certificate issued in Docket No. CP88–248–000 pursuant to Section 7 of the Natural Gas Act, all as more fully set forth in the request that is on file with the Commission and open to public inspection. This filing may be viewed on the web at http://www.ferc.fed.us/online/rims.htm (call 202–208–2222 for assistance).

CIPCO states that it would construct a new delivery point on its existing M–73 eight-inch diameter pipeline to serve Allegheny Power's Hatfield Ferry Power Station in Masontown, Pennsylvania. CIPCO states that the delivery point would connect to a natural gas service line owned, operated and maintained by Allegheny Power. CIPCO also states that to provide the new service, it would convert its existing delivery point to Columbia Gas of Pennsylvania, Inc. (CPA) on Line M–73 to a new receipt point. CIPCO states it will replace the existing 4-inch tap connecting its system to CPA with a 10-inch tap and replace approximately 140 feet of existing 4-inch line which is part of the meter facilities with 10-inch line in the same trench. CIPCO states that all of the above construction and operation would be automatically authorized under the automatic provisions of the Commission's blanket certificate regulations.

In addition, CIPCO proposes to increase the MAOP of the short segment (approximately 2053 feet) of Line M–73 from the interconnection with CPA to the Hatfield delivery point from 99 psia to 175 psia. CIPCO states that the reason for the proposed change is to enable CIPCO to provide the new service to the Hatfield Power Station.

Any questions regarding this filing should be directed to Michael E. Kingerski, Director of Transportation Marketing of CIPCO at (412) 655–8517, at 800 Regis Avenue, Pittsburgh, Pennsylvania 15236.

Any person or the Commission's staff may, within 45 days after issuance of the instant notice by the Commission, file pursuant to Rule 214 of the Commission's Procedural Rules (18 CFR 385.214) a motion to intervene or notice of intervention and pursuant to section 157.205 of the Regulations under the Natural Gas Act (18 CFR 157.205) a protest to the request. If no protest is filed within the time allowed therefor, the proposed activity shall be deemed to be authorized effective the day after the time allowed for filing a protest. If a protest is filed and not withdrawn within 30 days after the time allowed for filing a protest, the instant request shall be treated as an application for authorization pursuant to section 7 of the Natural Gas Act.

Linwood A. Watson, Jr.,

Acting Secretary.

[FR Doc. 99–26813 Filed 10–13–99; 8:45 am]

BILLING CODE 6717–01–M

DEPARTMENT OF ENERGY

Federal Energy Regulatory Commission

[Docket No. GT99–70–000]

Distrigas of Massachusetts Corporation; Notice of Proposed Changes in FERC Gas Tariff

October 6, 1999.

Take notice that on September 30, 1999, Distrigas of Massachusetts Corporation (DOMAC) tendered for filing as part of its FERC Gas Tariff, First Revised Volume No. 1, the following tariff sheet, to become effective December 1, 1999:

Seventh Revised Sheet No. 94

DOMAC states that the purpose of this filing is to record semiannual changes in DOMAC's index of customers.

Any person desiring to protest this filing should file a protest with the Federal Energy Regulatory Commission, 888 First Street, NE, Washington, DC 20426, in accordance with section 385.211 of the Commission's Rules and Regulations. All such protests must be filed as provided in section 154.210 of the Commission's Regulations. Protests will be considered by the Commission in determining the appropriate action to be taken, but will not serve to make protestants parties to the proceedings. Copies of this filing are on file with the

Commission and are available for public inspection in the Public Reference Room. This filing may be viewed on the web at http://www.ferc.fed.us/online/rims.htm (call 202–208–2222 for assistance).

Linwood A. Watson, Jr.,

Acting Secretary.

[FR Doc. 99–26812 Filed 10–13–99; 8:45 am]

BILLING CODE 6717–01–M

DEPARTMENT OF ENERGY

Federal Energy Regulatory Commission

[Docket No. PR00–1–000]

ONEOK Field Services Company; Notice of Petition for Rate Approval

October 7, 1999.

Take notice that on October 1, 1999, ONEOK Field Service Company (OFSC) filed pursuant to section 284.123(b)(2) of the Commission's regulations, a petition for rate approval requesting that the Commission approve as fair and equitable a cost-justified rate, not to exceed $0.016 per MMBtu for interruptible transportation service performed under section 311(a)(2) of the Natural Gas Policy Act of 1978.

Pursuant to Section 284.123(b)(2), if the Commission does not act within 150 days of the filing date, the proposed rates will be deemed fair and equitable and not in excess of an amount which interstate pipelines would be permitted to charge for similar transportation service. The Commission may, prior to the expiration of the 150-day period, extend the time for action or institute a proceeding to afford parties an opportunity for written comments and for the oral presentations of views, data, and arguments.

Any person desiring to participate in this rate proceeding must file a motion to intervene or a protest with the Federal Energy Regulatory Commission, 888 First Street, NE, Washington, DC 20426, in accordance with Rules 211 and 214 of the Commission's Rules of Practice and Procedure (18 CFR 385.211 and 385.214). All motions mut be filed with the Secretary of the Commission on or before October 22, 1999. The petition for rate approval is on file with the Commission and is available for public inspection. This filing may be viewed on the web at *http://www.ferc.fed.us/online/rims.htm* (call 202–208–2222 for assistance).

Linwood A. Watson, Jr.,

Acting Secretary.

[FR Doc. 99–26816 Filed 10–13–99 8:45 am]

BILLING CODE 6717–01–M

DEPARTMENT OF ENERGY

Federal Energy Regulatory Commission

[Docket No. RP98–52–000]

Williams Gas Pipelines-Central, Inc.; Notice of Offer of Settlement

October 7, 1999.

Take notice that on October 1, 1999, the Missouri Public Service Commission (MoPSC), Williams Gas Pipelines-Central, Inc., formerly Williams Natural Gas Company (Williams) and Missouri Gas Energy, a division of Southern Union Company (collectively called Sponsoring Parties) filed an Offer of Settlement under Rule 602 of the Commission's Rules of Practice and Procedure in the captioned docket. Sponsoring Parties filed the Offer of Settlement to facilitate and expedite the Commission's implementation of the decision of the United States Court of Appeals for the District of Columbia Circuit in *Public Service Company of Colorado.*[1] The Sponsoring Parties state the Offer of Settlement is intended to provide relief to small producers from their *ad valorem* tax refund liability and to reduce the administrative burdens on the Commission, its staff, first sellers and numerous interest owners and intervenors associated with the various proceedings pending at the Commission relating to such tax liability. A copy of the Offer of Settlement is on file with the Commission and is available for public inspection in the Public Reference Room. The Offer of Settlement may be viewed on the web at *http://www.ferc.fed.us/online/rims.htm* (call 202–208–2222 for assistance).

To achieve these objectives, the Offer of Settlement provides a $50,000 credit towards the *ad valorem* tax refund liability of the first sellers listed in the Statement of Refunds Due filed by Williams on November 18, 1997, as adjusted in Exhibit A to the Offer of Settlement to reflect subsequent corrections. Any first seller with a refund obligation of $50,000 or less for principal and interest will have its *ad valorem* tax refund waived in its entirety. First sellers with refund liabilities of $50,000 or less are not required to give up any rights or provide any other consideration as a condition to receiving the benefits. Sponsoring Parties state the Offer of Settlement would eliminate the entire refund obligation of 40 of the 75 first sellers on the Williams system.

Any first seller with a refund liability in excess of $50,000 as listed in the Statement of Refunds Due filed by Williams on November 18, 1997, as adjusted in Exhibit A to reflect subsequent corrections, is eligible to have its refund obligation reduced by $50,000. In order to be eligible for the $50,000 credit, such first sellers must pay the remaining refund liability (after deducting the $50,000), plus additional accrued interest through date of payment, and agree to withdraw all interventions, protests and court appeals related to the *ad valorem* tax refund. First sellers who accept the terms for partial waiver under the Offer of Settlement will be responsible for negotiating with their underlying interest owners the amount of the waiver relief applicable to their interest owners.

The Offer of Settlement also provides that any first seller listed in Williams' Statement of Refunds Due with a refund liability of $50,000 or less for principal and interest who has refunded to Williams amounts which would be waived under Article II will receive a refund from Williams of such amounts, plus additional accrued interest through date of payment by Williams. In addition, Article III provides that if Williams has previously received refunds directly from an interest owner whose obligation was incurred under a first seller whose entire refund obligation is waived pursuant to the agreement, Williams will refund such payments to the interest owner within 60 days of the effective date of the settlement. If jurisdictional refunds exceed the amount of undisbursed Kansas *ad valorem* tax refunds held by Williams, Williams will maintain a credit balance for the jurisdictional refunds. Any subsequent Kansas *ad valorem* tax refunds received by Williams will be used to reduce any credit balance before any disbursement is made to customers. One hundred twenty days after the effective date of the Offer of Settlement, Williams shall be permitted to direct bill any remaining credit amounts.

In accordance with section 385.602(f), initial comments on the Offer of Settlement are due on October 21, 1999 and any reply comments are due November 1, 1999.

Linwood A. Watson, Jr.,

Acting Secretary.

[FR Doc. 99–26818 Filed 10–13–99; 8:45 am]

BILLING CODE 6717–01–M

---

[1] *Public Service Co. of Colorado, et al.,* 80 FERC ¶61,264 (1997), *reh'g denied,* 82 FERC ¶ 61,058 (1998). Appeal pending. *Anadarko Petroleum Corporation v. FERC,* Case No. 98–1227 *et al.*

DEPARTMENT OF ENERGY

Federal Energy Regulatory Commission

Notice of Request To Transfer License and Soliciting Comments, Motions To Intervene, and Protests

October 7, 1999.

Take notice that the following application has been filed with the Commission and is available for public inspection:

a. *Application Type:* Request for Approval to Transfer License.

b. *Project No:* 10648–006.

c. *Date Filed:* August 25, 1999.

d. *Applicants:* Adirondack Hydro Development Corporation and McGrath Industries, Inc.

e. *Name of Project:* Waterford Hydroelectric Project.

f. *Location:* On the Hudson River, in Saratoga and Rensselear Counties, New York. The project does not utilize federal or tribal lands.

g. *Filed Pursuant to:* Federal Power Act, 16 U.S.C. 791(a)–825(r).

h. *Applicant Contacts:* McGrath Industries, Inc. Mr. Charles W. McGrath, President, 35 Maplewood Ave., Albany, New York 12205, Adirondack Hydro Development Corporation, Mr. John J. Conley, Senior Vice President, 39 Hudson Road, South Glens Falls, New York 12803, (518) 747–0930.

i. *FERC Contact:* Any questions on this notice should be addressed to Mr. Lynn R. Miles, Sr. at (202) 219–2671, or e-mail address: lynn.miles@ferc.fed.us.

j. *Deadline for filing comments and or motions:* November 15, 1999.

All documents (original and eight copies) should be filed with: David P. Boergers, Secretary, Federal Energy Regulatory Commission, 888 First Street, NE, Washington, DC 20426.

Please include the project number (10648–006) on any comments or motions filed.

k. *Description of Request:* McGrath Industries, Inc. (transferor) and Adirondack Hydro Development Corporation (transferee) jointly request that all of the transferor's interest as a co-licensee for FERC Project, No. 10648 be transferred to the transferee. The transferor no longer desires to be a co-licensee and requests that the Commission approve the application to make the transferee the sole licensee for the Waterford Project.

l. *Locations of the Application:* A copy of the application is available for inspection and reproduction at the commission's Public Reference Room, located at 888 First Street, NE, Room 2A, Washington DC 20426, or by calling (202) 208–1371. This filing may be viewed on http://www.ferc.fed.us/online/rims.htm (call (202) 208–2222 for assistance). A copy is also available for inspection and reproduction at the address in item h above.

m. Individuals desiring to be included on the Commission's mailing list should so indicate by writing to the Secretary of the Commission.

Comments, Protests, or Motions to Intervene—Anyone may submit comments, a protest, or a motion to intervene in accordance with the requirements of Rules of Practice and Procedure, 18 CFR 385.210, 385.211, 385.214. In determining the appropriate action to take, the Commission will consider all protests or other comments filed, but only those who file a motion to intervene in accordance with the Commission's Rules may become a party to the proceeding. Any comments, protests, or motions to intervene must be received on or before the specified comment date for the particular application.

Filing and Service of Responsive Documents—Any filings must bear in all capital letters the title ''COMMENTS'', ''RECOMMENDATIONS FOR TERMS AND CONDITIONS'', ''PROTESTS'', OR ''MOTION TO INTERVENE'', as applicable, and the Project Number of the particular application to which the filing refers. Any of the above-names documents must be filed by providing the original and the number of copies provided by the Commission's regulations to: The Secretary, Federal Energy Regulatory Commission, 888 First Street, NE, Washington, DC 20426. A copy of any motion to intervene must also be served upon each representative of the Applicant specified in the particular application.

Agency Comments—Federal, state, and local agencies are invited to file comments on the described application. a copy of the application may be obtained by agencies directly from the Applicant. If an agency does not file comments within the time specified for filing comments, it will be presumed to have no comments. One copy of an agency's comments must also be sent to the Applicant's representatives.

Linwood A. Watson, Jr.,

Acting Secretary.

[FR Doc. 99–26814 Filed 10–13–99; 8:45 am]

BILLING CODE 6717–01–M

DEPARTMENT OF ENERGY

Federal Energy Regulatory Commission

Notice of Amendment of Exemption and Soliciting Comments, Motions To Intervene, and Protests

October 7, 1999.

Take notice that the following hydroelectric application has been filed with the Commission and is available for public inspection:

a. *Application Type:* Amendment to Exemptions.

b. *Project Nos:* 10675–010, 10676–011, 10677–011, and 10678–014.

c. *Date Filed:* July 30, 1999.

d. *Applicant:* Consolidated Edison Energy, Inc.

e. *Name of Projects:* Chicopee River Projects (Dwight, Red Bridge, Putts Bridge, and Indian Orchard).

f. *Location:* On Chicopee River, Hampden and Hampshire Counties, Massachusetts.

g. *Filed Pursuant to:* 18 CFR 4.200.

h. *Applicant Contact:* John Labiak, Project Manager, Consolidated Edison Energy, Inc., 111 Broadway Ave. 16th Floor, New York, NY 10006, e-mail address: *Labiakj@conedenergy.com*. (212) 267–5280.

i. *FERC Contact:* Any questions on this notice should be addressed to Anumzziatta Purchiaroni at (202) 219–3297, or e-mail address: anumzziatta.purchiaroni@ferc.fed.us

j. *Deadline for filing comments and or motions:* November 15, 1999.

All documents (original and eight copies) should be filed with: David P. Boergers, Secretary, Federal Energy Regulatory Commission, 888 First Street, NE, Washington DC 20426.

Please include the project number (10675–010 et al) on any comments or motions filed.

k. *Description of Amendment:* The exemptee filed a Development Plan for increasing capacities at the Chicopee River Projects. In the plan, the exemptee proposes not to construct minimum flow turbines authorized by their exemptions, but to modify the existing generating equipment to achieve increases in installed capacities. The plan also includes additional work at the projects to comply with the required minimum flow releases.

l. *Locations of the application:* A copy of the application is available for inspection and reproduction at the Commission's Public Reference Room, located at 888 First Street, NE, Room 2A, Washington, DC 20426, or by calling (202) 208–1371. This filing may be viewed on http://www.ferc.fed.us/

online/rims.htm Call (202) 208–2222 for assistance. A copy is also available for inspection and reproduction at the address in item h above.

m. Individuals desiring to be included on the Commission's mailing should so indicate by writing to the Secretary of the Commission.

Comments, Protests, or Motions to Intervene—Any may submit comments, a protest, or a motion to intervene in accordance with the requirements of Rules of Practice and Procedure, 18 CFR 385.210, .211, .214. In determining the appropriate action to take, the Commission will consider all protests or other comments filed, but only those who file a motion to intervene in accordance with the Commission's Rules may become a party to the proceeding. Any comments, protests, or motions to intervene must be received on or before the specified comment date for the particular application.

Filing and Service of Responsive Documents—Any filings must bear in all capital letters the title ''COMMENTS'', ''RECOMMENDATIONS FOR TERMS AND CONDITIONS'', ''PROTEST'', or ''MOTION TO INTERVENE'', as applicable, and the Project Number of the particular application to which the filing refers. Any of the above-named documents must be filed by providing the original and the number of copies provided by the Commission's regulations to: The Secretary, Federal Energy Regulatory Commission, 888 First Street, NE, Washington, DC 20426. A copy of any motion to intervene must also be served upon each representative of the Applicant specified in the particular application.

Agency Comments—Federal, state, and local agencies are invited to file comments on the described application. A copy of the application may be obtained by agencies directly from the Applicant. If an agency does not file comments within the time specified for filing comments, it will be presumed to have no comments. One copy of an agency's comments mut also be sent to the Applicant's representatives.

Linwood A. Watson, Jr.,

Acting Secretary.

[FR Doc. 99–26815 Filed 10–13–99; 8:45 am]

BILLING CODE 6717–01–M

DEPARTMENT OF ENERGY

Federal Energy Regulatory Commission

Notice of Request for Extension of Time To Commence and Complete Project Construction and Soliciting Comments, Motions To Intervene, and Protests

October 7, 1999.

Take notice that the following application has been filed with the Commission and is available for public inspection:

a. *Type of Applications:* Request for Extensions of Time of Commence and Complete Project Construction.

b. *Project No.:* FERC No. 4204–021, White River Lock & Dam No. 1, located on the White River near the City of Batesville, Independence County, Arkansas Licensee: City of Batesville, AR.

c. *Project No.:* FERC No. 4659–023, White River Lock & Dam No. 3, located on the White River in the City of Marcella, Stone County, Arkansas. Licensee: Independence County, AR.

d. *Project No.:* FERC No. 4660–025, White River Lock & Dam No. 2, located on the White River in the Cities of Locust Grove and Batesville, Independence County, Arkansas. Licensee: Independence County, AR.

e. *Date Filed:* August 16, 1999.

f. *Pursuant to:* Public Law 104–241, 110 Stat. 3141 (1996).

g. *Applicants Contact:* Donald H. Clarke, Counsel for Licensee, Wilkinson, Barker, and Knauer, 2300 N Street, NW, Suite 700, Washington, DC 20037, (202) 783–4141.

h. *FERC Contact:* Any questions on this notice should be addressed to Mr. Lynn R. Miles, at (202) 219–2671, or e-mail address: lynn.miles@ferc.fed.us.

i. *Deadline for filing comments and or motions:* October 29, 1999.

All documents (original and eight copies) should be filed with David P. Boergers, Secretary, Federal Energy Regulatory Commission, 888 First Street, NE, Washington, DC 20426.

Please include the project numbers (4204–021, 4659–023, and 4660–025) on any comments or motions filed.

j. *Description of the Request:* The licensees for the subject projects have requested that the deadlines for commencement of construction at each project be extended for two additional years. The deadline to commence project construction for FERC Project Nos. 4204 and 4659 would be extended to February 27, 2002. The deadline to commence project construction for FERC Project No. 4660 would be extended to November 7, 2001. The deadline for completion of construction for FERC Project Nos. 4204 and 4659 would be extended to February 27, 2004. The deadline for completion of construction for FERC Project Nos. 4660 would be extended to November 7, 2003.

k. *Locations of the Application:* A copy of the application is available for inspection and reproduction at the Commission's Public Reference Room, located at 888 First Street, NE, Room 2A, Washington, DC 20426, or by calling (202) 208–1371. This filing may be viewed on http://www.ferc.fed.us/online/rims.htm (call (202) 208–2222 for assistance). A copy is also available for inspection and reproduction at the address in item h above.

m. Individuals desiring to be included on the Commission's mailing list should so indicate by writing to the Secretary of the Commission.

Comments, Protests, or Motions to Intervene—Anyone may submit comments, a protest, or a motion to intervene in accordance with the requirements of Rules of Practice and Procedure, 18 CFR 385.210, 385.211, 385.214. In determining the appropriate action to take, the Commission will consider all protests or other comments filed, but only those who file a motion to intervene in accordance with the Commission's Rules may become a party to the proceeding. Any comments, protests, or motions to intervene must be received on or before the specified comment date for the particular application.

Filing and Service of Responsive Documents—Any filings must bear in all capital letters the title ''COMMENTS'', ''RECOMMENDATIONS FOR TERMS AND CONDITIONS'', ''PROTEST'', OR ''MOTION TO INTERVENE'', as applicable, and the Project Number of the particular application to which the filing refers. Any of the above-named documents must be filed by providing the original and the number of copies provided by the Commission's regulations to: The Secretary, Federal Energy Regulatory Commission, 888 First Street, NE, Washington, DC 20426. A copy of any motion to intervene must also be served upon each representative of the Applicant specified in the particular application.

Agency Comments—Federal, state, and local agencies are invited to file comments on the described application. A copy of the application may be obtained by agencies directly from the Applicant. If an agency does not file comments within the time specified for filing comments, it will be presumed to

have no comments. One copy of an agency's comments must also be sent to the Applicant's representatives.

Linwood A. Watson, Jr.,

Acting Secretary.

[FR Doc. 99–26817 Filed 10–13–99; 8:45 am]

BILLING CODE 6717–01–M]

ENVIRONMENTAL PROTECTION AGENCY

[FRL–6457–9]

Agency Information Collection Activities: Submission for OMB Review; Comment Request; Control Technology Determinations for Equivalent Emissions Limitations by Permit

AGENCY: Environmental Protection Agency (EPA).

ACTION: Notice.

SUMMARY: In compliance with the Paperwork Reduction Act (44 U.S.C. 3501 *et seq.*), this document announces that the following Information Collection Request (ICR) has been forwarded to the Office of Management and Budget (OMB) for review and approval: Control Technology for Equivalent Emissions Limitations by Permit (OMB Control No. 2060–0266, EPA ICR No. 1648.02). The ICR describes the nature of the information collection and its expected burden and cost; where appropriate, it includes the actual data collection instrument.

DATES: Comments must be submitted on or before November 15, 1999.

FOR FURTHER INFORMATION CONTACT: Sandy Farmer at EPA by phone at (202) 260–2740, by email at farmer.sandy@epamail.epa.gov, or download a copy of the ICR off the Internet at http://www.epa.gov/ICR and refer to EPA ICR No. 1648.02

SUPPLEMENTARY INFORMATION:

Title: Control Technology for Equivalent Emissions Limitations by Permit (OMB Control No. 2060–0266; EPA ICR No. 1648.02). This is a reinstatement, with change, of the previously approved ICR for the proposed rule for which approval has expired.

Abstract: section 112(j) of the Clean Air Act as amended in 1990 requires that if EPA fails to promulgate a standard for a category or subcategory of major sources on schedule, then 18 months after the scheduled date of promulgation, sources must submit a permit application. States (with approved title V operating permit programs) will issue permits containing emission limitations equivalent to what EPA would have promulgated. Complying sources must submit a complete section 112(j) permit application that satisfies the criteria of 40 CFR part 63 subpart B. The information collected in the application documents will be used by the State agency for the purposes of permit approval, compliance determination, and the selection of particular control technology on a case-by-case basis. The mandatory need and authority for this information collection is contained in section 112(j) of the Clean Air Act as amended in 1990 (42 U.S.C. 7401, *et.seq.*, as amended by Pub. L. 101–549). Any confidential information submitted to a permitting authority will be safeguarded according to that agency's policies. The EPA will safeguard submitted confidential information according to policies in 40 CFR chapter I part 2 subpart B—Confidentiality of Business Information. An agency may not conduct or sponsor, and a person is not required to respond to, a collection of information unless it displays a currently valid OMB control number. The OMB control numbers for EPA's regulations are listed in 40 CFR part 9 and 48 CFR chapter 15.

Burden Statement: The annual public reporting and recordkeeping burden for this collection of information is estimated to average 175 hours for industry and 90 hours for State/ local agencies per response. Burden means the total time, effort, or financial resources expended by persons to generate, maintain, retain, or disclose or provide information to or for a Federal agency. This includes the time needed to review instructions; develop, acquire, install, and utilize technology and systems for the purposes of collecting, validating, and verifying information, processing and maintaining information, and disclosing and providing information; adjust the existing ways to comply with any previously applicable instructions and requirements; train personnel to be able to respond to a collection of information; search data sources; complete and review the collection of information; and transmit or otherwise disclose the information.

Respondents/Affected Entities: Pulp and paper combustions sources and State/ local agencies.

Estimated Number of Respondents: 149.

Frequency of Response: 1.

Estimated Total Annual Hour Burden: 19,743 hours.

Estimated Total Annualized Cost Burden (non-labor costs): $0.

Send comments on the Agency's need for this information, the accuracy of the provided burden estimates, and any suggested methods for minimizing respondent burden, including through the use of automated collection techniques to the following addresses. Please refer to EPA ICR No. 1648.02 and OMB Control No. 2060–0266 in any correspondence.

Ms. Sandy Farmer, U.S. Environmental Protection Agency, Office of Policy, Regulatory Information Division (2137), 401 M Street, SW, Washington, DC 20460;

and

Office of Information and Regulatory Affairs, Office of Management and Budget, Attention: Desk Officer for EPA, 725 17th Street, NW, Washington, DC 20503.

Dated: October 7, 1999.

Richard Westlund,

Acting Director, Regulatory Information Division.

[FR Doc. 99–26857 Filed 10–13–99; 8:45 am]

BILLING CODE 6560–50–P

ENVIRONMENTAL PROTECTION AGENCY

[FRL–6457–4]

Agency Information Collection Activities: Submission for OMB Review; Comment Request; Agricultural Health Study: Pesticide Exposure Study

AGENCY: Environmental Protection Agency (EPA).

ACTION: Notice.

SUMMARY: In compliance with the Paperwork Reduction Act (44 U.S.C. 3501 *et seq.*), this document announces that the following Information Collection Request (ICR) has been forwarded to the Office of Management and Budget (OMB) for review and approval: Agricultural Health Study—Pesticide Exposure Study, EPA ICR Number 1906.01. The ICR describes the nature of the information collection and its expected burden and cost; where appropriate, it includes the actual data collection instrument.

DATES: Comments must be submitted on or before November 15, 1999.

FOR FURTHER INFORMATION CONTACT: Sandy Farmer at EPA by phone at (202) 260–2740, by email at farmer.sandy@epa.gov, or download a copy of the ICR off the Internet at http://www.epa.gov/icr and refer to EPA ICR No. 1906.01.

SUPPLEMENTARY INFORMATION:

Title: Agricultural Health Study—Pesticide Exposure Study, EPA ICR

Number 1906.01. This is a new collection.

Abstract: The National Cancer Institute (NCI), the National Institute of Environmental Health Sciences (NIEHS) and the EPA have agreed through a Memorandum of Understanding to perform a prospective epidemiological study of the risk of cancer and other diseases associated with usage and exposure to pesticides of some 90,000 registered pesticide applicators and their spouses in the states of Iowa and North Carolina. The Agricultural Health Study (AHS) will evaluate whether those applicators with the greatest usage history and potential exposures to pesticides are at a greater risk of cancer or other diseases than those applicators with lowest usage history and reduced potential exposures to pesticides. Information collection requests prepared by NCI for survey data collection in the AHS epidemiological study have received OMB approval (current OMB #0925–0406, expires 11/30/01).

The U.S. EPA will support the AHS by performing an exposure measurement study for private pesticide applicators in the cohort. The exposure measurement study is the subject of the information collection request cited in this document. Exposure data are needed for assessing and refining methods for classifying applicator exposures using study questionnaire information, to measure the magnitude of applicator pesticide exposures, and to identify key exposure factors. Observations of applicator work practices will be compared to self-reported information from questionnaires to assess reporting reliability of current practices. In addition, EPA will measure spouse and child urinary pesticide biomarkers to help understand whether and to what extent agricultural application of pesticides leads to exposures for members of the applicator's family.

Study respondents will be registered private pesticide applicators in the AHS prospective epidemiological cohort, their spouses, and up to two children selected from each home. A total of 160 applicators will be selected into the study. Approximately 24 of the applicators will be asked to participate in the exposure study in each of two years. Participation will be entirely voluntary. An applicator that agrees to participate in the exposure study will be retained even if their spouse and/or child decline to participate.

Applicator exposures will be monitored around one pesticide application of a targeted pesticide. A sample of the pesticide formulation will be collected. Dermal exposure will be estimated by collection of dermal patch and hand-wipe samples. Urine samples will be collected before and following the application event to measure pesticide or metabolite concentrations and to allow estimation of the absorbed dose. A sample of house dust will be collected from the applicator's home. Spouses and one child in the age range of 3–18 years old will be asked to provide urine samples before and after the monitored application.

Pesticide handling, mixing, loading, and application (HMLA) activities will be observed. A modified version of the NCI AHS Private Pesticide Applicator Followup Questionnaire (OMB #0925–0406) will be administered to the applicator immediately after the observed HMLA activity. A Biomarker Questionnaire will be administered to the applicator at the end of the monitoring period to collect data for interpreting the measurements and to provide additional information about applicator and farm family exposure to pesticides. The full AHS Private Pesticide Applicator Follow-up Questionnaire will be administered to the applicator several months after the observed application event.

An agency may not conduct or sponsor, and a person is not required to respond to, a collection of information unless it displays a currently valid OMB control number. The OMB control numbers for EPA's regulations are listed in 40 CFR part 9 and 48 CFR Chapter 15. The **Federal Register** document required under 5 CFR 1320.8(d), soliciting comments on this collection of information was published on 6/15/1999 (64 FR 32042); no comments were received.

Burden Statement: The annual public reporting and recordkeeping burden for this collection of information is estimated to average 4.1 hours for pesticide applicators, 0.8 hours for spouses and children providing urine samples, and 0.25 hours for children only responding to a questionnaire. Burden means the total time, effort, or financial resources expended by persons to generate, maintain, retain, or disclose or provide information to or for a Federal agency. This includes the time needed to review instructions; develop, acquire, install, and utilize technology and systems for the purposes of collecting, validating, and verifying information, processing and maintaining information, and disclosing and providing information; adjust the existing ways to comply with any previously applicable instructions and requirements; train personnel to be able to respond to a collection of information; search data sources; complete and review the collection of information; and transmit or otherwise disclose the information.

Respondents/Affected Entities: registered private pesticide applicators; parents/households.

Estimated Number of Respondents: 152.

Frequency of Response: One occasion (except for 24 participants repeated in second year).

Estimated Total Annual Hour Burden: 349 hours.

Estimated Total Annualized Cost Burden (non-labor costs only): $0.

Send comments on the Agency's need for this information, the accuracy of the provided burden estimates, and any suggested methods for minimizing respondent burden, including through the use of automated collection techniques to the following addresses. Please refer to EPA ICR No. 1906.01 in any correspondence.

Ms. Sandy Farmer, U.S. Environmental Protection Agency, Office of Policy, Regulatory Information Division (2137), 401 M Street, SW, Washington, DC 20460;

and

Office of Information and Regulatory Affairs, Office of Management and Budget, Attention: Desk Officer for EPA, 725 17th Street, NW, Washington, DC 20503.

Dated: October 7, 1999.

Richard T. Westlund,

Acting Director, Regulatory Information Division.

[FR Doc. 99–26860 Filed 10–13–99; 8:45 am]

BILLING CODE 6560–50–P

ENVIRONMENTAL PROTECTION AGENCY

[FRL–6457–5]

Clean Air Act Advisory Committee: Accident Prevention Subcommittee Meeting

AGENCY: Environmental Protection Agency (EPA).

ACTION: Notice of meeting.

SUMMARY: The Clean Air Act section 112(r) required EPA to publish regulations to prevent accidental releases of chemicals and to reduce the severity of those releases that do occur. These accidental release prevention requirements build on the chemical safety work begun by the Emergency Planning and Community Right-to-Know Act (EPCRA) which sets forth requirements for industry, State and local governments.

The goal of the Risk Management Program is to reduce chemical risk at the local level. Risk Management Plans (RMPs), which contain a summary of information about each facility's Risk Management Program, were required to be submitted by June 21, 1999 by regulations under section 112(r). Making the RMPs available to the public is intended to stimulate communication between industry and the public to improve accident prevention and emergency response practices at the local level.

Over 14,000 RMPs were submitted from many different industry sectors, and from both large and small businesses. Facilities are required to update RMPs at least every 5 years, or more frequently if there are important changes, such as the introduction of a new regulated chemical into their production process. RMPs will be stored in RMP*Info™ for 15 years from the date of receipt.

On August 5, 1999, President Clinton signed legislation that removed from coverage by the RMP program any flammable fuel when used as a fuel or held for sale as fuel by a retail facility. The legislation also limits access to the Off-Site Consequence Analysis (OCA) sections of the RMP.

The Accident Prevention Subcommittee was created in September 1996 to advise EPA's Chemical Emergency Preparedness and Prevention Office (CEPPO) on these chemical accident prevention issues, specifically, section 112(r) of the Clean Air Act.

DATES: The Accident Prevention Subcommittee of the Clean Air Act Advisory Committee will hold a public meeting on November 5, 1999 from 8:30 a.m. to 4:30 p.m.

ADDRESSES: The meeting will be held at the Hall of States, 444 North Capitol St., NW, Washington DC, near Union Station. Members of the public are welcome to attend in person.

FOR FURTHER INFORMATION CONTACT: Members of the public desiring additional information about this meeting, should contact Karen Schneider, Designated Federal Official, U.S. EPA (5104), 401 M. St., SW, Washington DC 20460, via the Internet at: schneider.karen@epamail.epa.gov, by telephone at (202) 260–2711 or FAX at (202) 401–3448.

SUPPLEMENTARY INFORMATION:

Agenda

8:30–9:00—Opening Remarks—Jim Makris (8:30–9:00)

9:00–12:00—Discussion of Public Law 106–40, the Chemical Safety Information, Site Security and Fuels Regulatory Relief Act: focusing on Section 2 of the law regarding flammable fuels removed from coverage

1:30–4:00—Discussion of Public Law 106–40, the Chemical Safety Information, Site Security and Fuels Regulatory Relief Act: focusing on Section 3 of the law regarding public access to Off-Site Consequence Analysis information

4:00–4:30—Comments from the Public

Members of the public who wish to make a brief oral presentation in person in Washington DC to the Subcommittee at the meeting, must contact Karen Schneider in writing (by letter, fax, or email—see previously stated information) no later than November 3, 1999, in order to be included on the agenda. Written comments may be submitted to the Accident Prevention Subcommittee up through the date of the meeting. Please address such material to Karen Schneider at the above address.

The Accident Prevention Subcommittee expects that public statements presented at its meetings will not be repetitive or previously submitted oral or written statements. In general, opportunities for oral comment will be limited to no more than three minutes per speaker and no more than thirty minutes total. Written comments (twelve copies) received sufficiently prior to a meeting date (usually one week prior to a meeting or teleconference), may be mailed to the Subcommittee prior to its meeting.

Additional information on the Accident Prevention Subcommittee is available on the Internet at: http://www.epa.gov/swercepp/acc-pre.html.

If you would like to automatically receive future information on the Accident Prevention Subcommittee and its Workgroups by email, you can subscribe to the EPA–RMP Listserve by sending the following message to listserver@unixmail.rtpnc.epa.gov: SUBSCRIBE EPA–RMP <Your firstname> <Your lastname>

Example: SUBSCRIBE EPA–RMP John Smith.

Dated: October 7, 1999.

Karen Schneider,

Designated Federal Official.

[FR Doc. 99–26859 Filed 10–13–99; 8:45 am]

BILLING CODE 6560–50–P

ENVIRONMENTAL PROTECTION AGENCY

[FRL–6457–6]

Announcement of Stakeholders Meeting on the Drinking Water Contaminant Identification and Selection Process, and the 6-Year Review of All Existing National Primary Drinking Water Regulations, as Required by the Safe Drinking Water Act, as Amended in 1996

AGENCY: Environmental Protection Agency.

ACTION: Notice of stakeholders meeting.

SUMMARY: The Environmental Protection Agency (EPA) will be holding a two-day public meeting on November 16 and 17, 1999. This meeting will encompass two Safe Drinking Water Act requirements that have similar goals. Therefore, EPA has combined the meetings in order to increase meeting participation and make attendance as convenient as possible for stakeholders. The purpose of this meeting is to have a dialogue with stakeholders, and the public at large, on the contaminant identification and selection process (November 16), and to discuss the process to perform a 6-Year Review of all National Primary Drinking Water Regulations (NPDWRs) (November 17).

For the contaminant selection process, EPA will discuss and seek input on: The draft research strategy EPA has formulated in order to fill data gaps for contaminants identified on the Agency's first drinking water contaminant candidate list (CCL); considerations in making regulatory determinations from the CCL, and the process for developing future CCLs.

The Safe Drinking Water Act (SDWA), as amended in1996, requires EPA to establish a list of contaminants, and revise it every five years, to aid in priority setting for the Agency's drinking water program. The SDWA requires EPA to make determinations for five contaminants as to whether a NPDWR is necessary. The SDWA, as amended, also requires that on a 6-Year cycle EPA must review and revise, as appropriate, each existing NPDWR and that any revision shall maintain, or provide for greater protection of the health of persons. EPA would like to have a dialogue with stakeholders on the various components of these projects, including status of analytical methods, treatment technologies, health effects information, and occurrence data.

At the upcoming meeting, EPA is seeking input from State and Tribal drinking water programs, the regulated

community (public water systems), public health organizations, academia, environmental and public interest groups, engineering firms, and other stakeholders. EPA encourages the full participation of stakeholders throughout this process.

DATES: The stakeholders meeting will be held on Tuesday, November 16, 1999 from 8:30 a.m. to 5 p.m. EST, and Wednesday, November 17, 1999 from 8:30 a.m. to 5 p.m. EST.

REGISTRATION: To register for the meeting, please contact the Safe Drinking Water Hotline at 1–800–426–4791 between 9 a.m. and 5 p.m. EST. Those registered for the meeting by Wednesday, November 2, 1999 will receive an agenda, logistics sheet, and background materials prior to the meeting. Members of the public who cannot attend the meeting in person may participate via conference call and should register with the Safe Drinking Water Hotline. Conference lines will be allocated on the basis of first-reserved, first served. The meeting will be held in the offices of RESOLVE, Suite 275, 1255 23rd Street, NW, Washington, DC 20037.

FOR FURTHER INFORMATION CONTACT: For general information on meeting logistics, please contact the Safe Drinking Water Hotline at 1–800–426–4791. For information on other activities related to the contaminant selection process for the CCL, and the 6-Year Review process, and other EPA activities under the Safe Drinking Water Act in general, contact the Safe Drinking Water Hotline at 1–800–426–4791.

SUPPLEMENTARY INFORMATION:

A. Background

Under the Safe Drinking Water Act (SDWA), as amended in 1996, EPA must review and revise, as appropriate, at intervals not less than every six years, all existing National Primary Drinking Water Regulations (NPDWRs). Revised NPDWRs, must maintain, or provide for greater, protection of the health of persons. On November 17, EPA will discuss the analyses the agency has initiated, or plans to conduct, to identify candidate NPDWRs for possible revision. These analyses include health effects, occurrence and exposure, analytical methods and treatment technologies.

The SDWA also requires EPA, every five years, to develop and publish a list of contaminants known or anticipated to occur in drinking water. The Contaminant Candidate List (CCL) aids the Agency's drinking water program to assess priorities for research, guidance development, and possible development of NPDWRs. The SDWA also requires a regulatory determination for five contaminants every five years. The first CCL was published in the March 2, 1998 **Federal Register**. On November 16, EPA seeks stakeholders' input on the process and considerations in making regulatory determinations for five contaminants by 2001. For contaminants listed on the first CCL, with data gaps identified that must be filled before EPA can make a scientifically informed regulatory determination, EPA's Office of Research and Development is developing a Research Strategy. EPA will discuss the status of the draft CCL Research Strategy at the upcoming stakeholders meeting. The meeting will also present an overview of studies completed, or are underway, by the National Research Council that evaluates methods for identifying and prioritizing drinking water contaminants.

The upcoming meeting addresses several aspects of EPA's efforts to determine the contaminant selection process from the Contaminant Candidate List and the new process of reviewing existing NPDWRs. Those registered for the meeting by Wednesday, November 2, 1999 will receive an agenda, logistics sheet, and background materials prior to the meeting.

B. Request for Stakeholder Involvement

EPA has announced this public meeting to hear the views of stakeholders on EPA's plans for the contaminant selection process from the CCL, and activities to develop a 6-Year Review Plan. The public is invited to provide comments on the issues listed above during the November 16 and 17, 1999 meeting, or in writing to Mike Osinski, Contaminant Candidate List Team Leader, U.S. EPA, Office of Ground Water and Drinking Water, 401 M Street, NW, MC 4607, Washington DC 20460 or osinski.michael@epa.gov; or to Judy Lebowich, 6-Year Review Team Co-Leader, U.S. EPA, Office of Ground Water and Drinking Water, 401 M Street, SW, MC 4607, Washington DC 20460 or lebowich.judy@epa.gov, or Marc Parrotta, 6-Year Review Team Co-Leader, U.S. EPA, Office of Ground Water and Drinking Water, 401 M Street, SW, MC 4607, Washington DC 20460 or parrotta.marc@epa.gov.

Dated: October 7, 1999.

Elizabeth Fellows,

Acting Director, Office of Ground Water and Drinking Water, Environmental Protection Agency.

[FR Doc. 99–26809 Filed 10–13–99; 8:45 am]

BILLING CODE 6560–50–P

ENVIRONMENTAL PROTECTION AGENCY

[OPP–34145A; FRL–6389–2]

Organophosphate Pesticides; Availability of Revised Risk Assessments

AGENCY: Environmental Protection Agency (EPA).

ACTION: Notice.

SUMMARY: This notices announces the availability of the revised risk assessments and related documents for one organophosphate pesticide, fenthion. In addition, this notice starts a 60-day public participation period during which the public is encouraged to submit risk management ideas or proposals. These actions are in response to a joint initiative between EPA and the Department of Agriculture (USDA) to increase transparency in the tolerance reassessment process for organophosphate pesticides.

DATES: Comments, identified by docket control number OPP–34145A for fenthion, must be received by EPA on or before December 13, 1999.

ADDRESSES: Comments may be submitted by mail, electronically, or in person. Please follow the detailed instructions for each method as provided in Unit III. of the ''SUPPLEMENTARY INFORMATION.'' To ensure proper receipt by EPA, it is imperative that you identify docket control number OPP–34145A in the subject line on the first page of your response.

FOR FURTHER INFORMATION CONTACT: Karen Angulo, Special Review and Reregistration Division (7508C), Office of Pesticide Programs, Environmental Protection Agency, 401 M St., SW., Washington, DC 20460; telephone number: (703) 308–8004; e-mail address: angulo.karen@epa.gov.

SUPPLEMENTARY INFORMATION:

I. Does this Action Apply to Me?

This action is directed to the public in general, nevertheless, a wide range of stakeholders will be interested in obtaining the revised risk assessments and submitting risk management comments on fenthion, including environmental, human health, and agricultural advocates; the chemical industry; pesticide users; and members of the public interested in the use of pesticides on food. As such, the Agency has not attempted to specifically describe all the entities potentially affected by this action. If you have any questions regarding the applicability of this action to a particular entity, consult

the person listed under ''FOR FURTHER INFORMATION CONTACT.''

II. How Can I Get Additional Information, Including Copies of this Document or Other Related Documents?

A. *Electronically.* You may obtain electronic copies of this document and other related documents from the EPA Internet Home Page at http://www.epa.gov/. To access this document, on the Home Page select ''Laws and Regulations'' and then look up the entry for this document under the ''**Federal Register**—Environmental Documents.'' You can also go directly to the **Federal Register** listings at http://www.epa.gov/fedrgstr/.

To access information about organophosphate pesticides and obtain electronic copies of the revised risk assessments and related documents mentioned in this notice, you can also go directly to the Home Page for the Office of Pesticide Programs (OPP) at http://www.epa.gov/pesticides/op/.

B. *In Person.* The Agency has established an official record for this action under docket control number OPP–34145A. The official record consists of the documents specifically referenced in this action, any public comments received during an applicable comment period, and other information related to this action, including any information claimed as Confidential Business Information (CBI). This official record includes the documents that are physically located in the docket, as well as the documents that are referenced in those documents. The public version of the official record does not include any information claimed as CBI. The public version of the official record, which includes printed, paper versions of any electronic comments submitted during an applicable comment period, is available for inspection in Rm. 119, Crystal Mall #2, 1921 Jefferson Davis Hwy., Arlington, VA, from 8:30 a.m. to 4 p.m., Monday through Friday, excluding legal holidays. The PIRIB telephone number is (703) 305–5805.

III. How Can I Respond to this Action?

A. How and to Whom Do I Submit Comments?

You may submit comments through the mail, in person, or electronically. To ensure proper receipt by EPA, it is imperative that you identify docket control number OPP–34145A in the subject line on the first page of your response.

1. *By mail.* Submit comments to: Public Information and Records Integrity Branch, Information Resources and Services Division (7502C), Office of Pesticide Programs, Environmental Protection Agency, 401 M St., SW., Washington, DC 20460.

2. *In person or by courier.* Deliver comments to: Public Information and Records Integrity Branch, Information Resources and Services Division, Office of Pesticide Programs, Environmental Protection Agency, Rm. 119, Crystal Mall #2, 1921 Jefferson Davis Hwy., Arlington, VA. The PIRIB is open from 8:30 a.m. to 4 p.m., Monday through Friday, excluding legal holidays. The PIRIB telephone number is (703) 305–5805.

3. *Electronically.* Submit electronic comments by e-mail to: ''opp-docket@epa.gov,'' or you can submit a computer disk as described in this unit. Do not submit any information electronically that you consider to be CBI. Electronic comments must be submitted as an ASCII file, avoiding the use of special characters and any form of encryption. Comments and data will also be accepted on standard computer disks in WordPerfect 6.1/8.0 or ASCII file format. All comments in electronic form must be identified by the docket control number OPP–34145A. Electronic comments may also be filed online at many Federal Depository Libraries.

B. How Should I Handle CBI Information that I Want to Submit to the Agency?

Do not submit any information electronically that you consider to be CBI. You may claim information that you submit to EPA in response to this document as CBI by marking any part or all of that information as CBI. Information so marked will not be disclosed except in accordance with procedures set forth in 40 CFR part 2. In addition to one complete version of the comment that includes any information claimed as CBI, a copy of the comment that does not contain the information claimed as CBI must be submitted for inclusion in the public version of the official record. Information not marked confidential will be included in the public version of the official record without prior notice. If you have any questions about CBI or the procedures for claiming CBI, please consult the person listed under ''FOR FURTHER INFORMATION CONTACT.''

IV. What Action is EPA Taking in this Notice?

EPA is making available for public viewing the revised risk assessments and related documents for two organophosphates, fenthion. These documents have been developed as part of the pilot public participation process that EPA and USDA are now using for involving the public in the reassessment of pesticide tolerances under the Food Quality Protection Act (FQPA), and the reregistration of individual organophosphate pesticides under the Federal Insecticide, Fungicide, and Rodenticide Act (FIFRA). The pilot public participation process was developed as part of the EPA-USDA Tolerance Reassessment Advisory Committee (TRAC), which was established in April 1998, as a subcommittee under the auspices of EPA's National Advisory Council for Environmental Policy and Technology. A goal of the pilot public participation process is to find a more effective way for the public to participate at critical junctures in the Agency's development of organophosphate risk assessments and risk management decisions. EPA and USDA began implementing this pilot process in August 1998, to increase transparency and opportunities for stakeholder consultation. The documents being released to the public through this notice provide information on the revisions that were made to the fenthion preliminary risk assessments, which where released to the public, September 9, 1998 (63 FR 48213) (FRL–6030–2), through a notice in the **Federal Register**.

As part of the pilot public participation process, EPA and USDA may hold public meetings (called Technical Briefings) to provide interested stakeholders with opportunities to become more informed about revised organophosphate risk assessments. During the Technical Briefings, EPA describes the major points (e.g., risk contributors), use data that were used (e.g., data from USDA's Pesticide Data Program (PDP)), and discusses how public comments impacted the assessment. USDA provides ideas on possible risk management. Stakeholders have an opportunity to ask clarifying questions, and all meeting minutes are placed in the OPP public docket. Technical Briefings may not be held for chemicals that have limited use patterns or low levels of risk concern. The use patterns for fenthion are predominately mosquito control, therefore, no Technical Briefing is planned. In cases where no Technical Briefing is held, the Agency will make a special effort to communicate with interested stakeholders in order to better ensure their understanding of the revised assessments and how they can participate in the organophosphate pilot public participation process. EPA has a good familiarity with the stakeholder

groups associated with the use of fenthion who may be interested in participating in the risk assessment/risk management process, and will contact them individually to inform them that no Technical Briefing will be held. EPA is willing to meet with stakeholders to discuss the fenthion revised risk assessments. Minutes of all meetings will be docketed.

In addition, this notice starts a 60-day public participation period during which the public is encouraged to submit risk management proposals or otherwise comment on risk management for fenthion. The Agency is providing an opportunity, through this notice, for interested parties to provide written risk management proposals or ideas to the Agency on the pesticides specified in this notice. Such comments and proposals could address ideas about how to manage dietary, occupational, or ecological risks on specific fenthion use sites or crops across the United States or in a particular geographic region of the country. To address dietary risk, for example, commenters may choose to discuss the feasibility of lower application rates, increasing the time interval between application and harvest (''pre-harvest intervals''), modifications in use, or suggest alternative measures to reduce residues contributing to dietary exposure. For occupational risks, for example, commenters may suggest personal protective equipment or technologies to reduce exposure to workers and pesticide handlers. For ecological risks, commentors may suggest ways to reduce environmental exposure, e.g., exposure to birds, fish, mammals, and other non-target organisms. EPA will provide other opportunities for public participation and comment on issues associated with the organophosphate tolerance reassessment program. Failure to participate or comment as part of this opportunity will in no way prejudice or limit a commenter's opportunity to participate fully in later notice and comment processes. All comments and proposals must be received by EPA on or before December 13, 1999 at the addresses given under Unit I. of the ''SUPPLEMENTARY INFORMATION.'' Comments and proposals will become part of the Agency record for the organophosphate specified in this notice.

List of Subjects

Environmental protection, Chemicals, Pesticides and pests.

Dated: October 7, 1999.

Lois Rossi,

Director, Special Review and Reregistration Division, Office of Pesticide Programs.

[FR Doc. 99–26807 Filed 10–13–99; 8:45 am]

BILLING CODE 6560–50–F

ENVIRONMENTAL PROTECTION AGENCY

[PF–893; FRL–6382–7]

Notice of Filing Pesticide Petitions to Establish a Tolerance for Certain Pesticide Chemicals in or on Food

AGENCY: Environmental Protection Agency (EPA).

ACTION: Notice.

SUMMARY: This notice announces the initial filing of pesticide petitions proposing the establishment of regulations for residues of certain pesticide chemicals in or on various food commodities.

DATES: Comments, identified by docket control number PF–893, must be received on or before November 15, 1999.

ADDRESSES: Comments may be submitted by mail, electronically, or in person. Please follow the detailed instructions for each method as provided in Unit I.C. of the ''SUPPLEMENTARY INFORMATION'' section. To ensure proper receipt by EPA, it is imperative that you identify docket control number PF–893 in the subject line on the first page of your response.

FOR FURTHER INFORMATION CONTACT: The product manager listed in the table below:

Product Manager	Office location/telephone number/e-mail address	Address	Petition number(s)
Sidney Jackson	Rm. 272, CM #2, 703–305–7610, e-mail: jackson.sidney@epamail.epa.gov.	1921 Jefferson Davis Hwy, Arlington, VA	PP 9E6035
Mary L. Waller	Rm. 249, CM #2, 703–308–9354, e-mail: waller.mary@epamail.epa.gov.	Do.	PP 9F5066, 9F6023, 7E4830

SUPPLEMENTARY INFORMATION:

I. General Information

A. Does this Action Apply to Me?

You may be affected by this action if you are an agricultural producer, food manufacturer or pesticide manufacturer. Potentially affected categories and entities may include, but are not limited to:

Categories	NAICS	Examples of potentially affected entities
Industry	111	Crop production
	112	Animal production
	311	Food manufacturing
	32532	Pesticide manufacturing

This listing is not intended to be exhaustive, but rather provides a guide for readers regarding entities likely to be affected by this action. Other types of entities not listed in the table could also be affected. The North American Industrial Classification System (NAICS) codes have been provided to assist you and others in determining whether or not this action might apply to certain entities. If you have questions regarding the applicability of this action to a particular entity, consult the person listed in the ''FOR FURTHER INFORMATION CONTACT'' section.

B. How Can I Get Additional Information, Including Copies of this Document and Other Related Documents?

1. *Electronically*. You may obtain electronic copies of this document, and certain other related documents that might be available electronically, from the EPA Internet Home Page at http://www.epa.gov/. To access this document, on the Home Page select ''Laws and Regulations'' and then look up the entry for this document under the ''**Federal Register**--Environmental Documents.'' You can also go directly to the **Federal Register** listings at http://www.epa.gov/fedrgstr/.

2. *In person*. The Agency has established an official record for this action under docket control number PF–893. The official record consists of the documents specifically referenced in this action, any public comments received during an applicable comment period, and other information related to this action, including any information claimed as confidential business information (CBI). This official record includes the documents that are physically located in the docket, as well as the documents that are referenced in those documents. The public version of the official record does not include any information claimed as CBI. The public version of the official record, which includes printed, paper versions of any electronic comments submitted during an applicable comment period, is available for inspection in the Public Information and Records Integrity Branch (PIRIB), Rm. 119, Crystal Mall #2, 1921 Jefferson Davis Highway, Arlington, VA, from 8:30 a.m. to 4 p.m., Monday through Friday, excluding legal holidays. The PIRIB telephone number is (703) 305–5805.

C. How and to Whom Do I Submit Comments?

You may submit comments through the mail, in person, or electronically. To ensure proper receipt by EPA, it is imperative that you identify docket control number PF–893 in the subject line on the first page of your response.

1. *By mail.* Submit your comments to: Public Information and Records Integrity Branch (PIRIB), Information Resources and Services Division (7502C), Office of Pesticide Programs, Environmental Protection Agency, 401 M St., SW., Washington, DC 20460.

2. *In person or by courier.* Deliver your comments to: Public Information and Records Integrity Branch (PIRIB), Information Resources and Services Division (7502C), Office of Pesticide Programs (OPP), Environmental Protection Agency, Rm. 119, Crystal Mall #2, 1921 Jefferson Davis Highway, Arlington, VA. The PIRIB is open from 8:30 a.m. to 4 p.m., Monday through Friday, excluding legal holidays. The PIRIB telephone number is (703) 305–5805.

3. *Electronically*. You may submit your comments electronically by E-mail to: ''*opp-docket@epa.gov*,'' or you can submit a computer disk as described above. Do not submit any information electronically that you consider to be CBI. Avoid the use of special characters and any form of encryption. Electronic submissions will be accepted in Wordperfect 6.1/8.0 or ASCII file format. All comments in electronic form must be identified by docket control number PF–893. Electronic comments may also be filed online at many Federal Depository Libraries.

D. How Should I Handle CBI That I Want to Submit to the Agency?

Do not submit any information electronically that you consider to be CBI. You may claim information that you submit to EPA in response to this document as CBI by marking any part or all of that information as CBI. Information so marked will not be disclosed except in accordance with procedures set forth in 40 CFR part 2. In addition to one complete version of the comment that includes any information claimed as CBI, a copy of the comment that does not contain the information claimed as CBI must be submitted for inclusion in the public version of the official record. Information not marked confidential will be included in the public version of the official record without prior notice. If you have any questions about CBI or the procedures for claiming CBI, please consult the person identified in the ''FOR FURTHER INFORMATION CONTACT'' section.

E. What Should I Consider as I Prepare My Comments for EPA?

You may find the following suggestions helpful for preparing your comments:

1. Explain your views as clearly as possible.
2. Describe any assumptions that you used.
3. Provide copies of any technical information and/or data you used that support your views.
4. If you estimate potential burden or costs, explain how you arrived at the estimate that you provide.
5. Provide specific examples to illustrate your concerns.
6. Make sure to submit your comments by the deadline in this notice.
7. To ensure proper receipt by EPA, be sure to identify the docket control number assigned to this action in the subject line on the first page of your response. You may also provide the name, date, and **Federal Register** citation.

II. What Action is the Agency Taking?

EPA has received pesticide petitions as follows proposing the establishment and/or amendment of regulations for residues of certain pesticide chemicals in or on various food commodities under section 408 of the Federal Food, Drug, and Comestic Act (FFDCA), 21 U.S.C. 346a. EPA has determined that these petitions contain data or information regarding the elements set forth in section 408(d)(2); however, EPA has not fully evaluated the sufficiency of the submitted data at this time or whether the data supports granting of the petition. Additional data may be needed before EPA rules on the petition.

List of Subjects

Environmental protection, Agricultural commodities, Feed additives, Food additives, Pesticides and pests, Reporting and recordkeeping requirements.

Dated: October 4, 1999.

James Jones,

Director, Registration Division, Office of Pesticide Programs.

Summaries of Petitions

The petitioner summaries of the pesticide petitions are printed below as required by section 408(d)(3) of the FFDCA. The summaries of the petitions were prepared by the petitioners and represent the views of the petitioners. EPA is publishing the petition summaries verbatim without editing them in any way. The petition summary announces the availability of a description of the analytical methods available to EPA for the detection and measurement of the pesticide chemical residues or an explanation of why no such method is needed.

1. Interregional Research Project Number 4 (IR-4)

PP 9E6035

EPA has received a pesticide petition [9E6035] from the IR-4 New Jersey Agricultural Experiment Station, P.O. Box 231, Rutgers University, New Brunswick, NJ 08903 proposing, pursuant to section 408(d) of the Federal Food, Drug, and Cosmetic Act (FFDCA), 21 U.S.C. 346a(d), to amend 40 CFR part 180 by establishing tolerances for residues of the insecticide, spinosad (Factor A and Factor D): Factor A is 2-[(6-deoxy-2,3,4-tri-O-methyl-alpha-L-manno-pyranosyl)oxy]-13-[5-(dimethylamino)-tetrahydro-6-methyl-2 H-pyran-2-yl]oxy]-9-ethyl-2,3,3a,5a,5b,6,9,10,11,12,13,14,16a,6b-tetradecahydro-14-methyl-1 H-as-Indaceno [3,2-d]oxacyclododecin-7,15-dione. Factor D is 2-[(6-deoxy-2,3,4-tri-O-methyl-alpha-L-manno-pyranosyl)oxy]-13-[[5-(dimethylamino)-tetrahydri-6-methyl-2H-pyran-2-yl]oxy]-9-ethyl-2,3,3a,5a,5b,6,9,10,11,12,13,14,16a,16b-tetradecahydro-4,14-dimethyl- 1H-as-Indaceno[3,2-d]oxacyclododecin-7,15-dione in or on the raw agricultural

commodities (RACs) barley, buckwheat, oats, and rye (grains) at 0.02 parts per million (ppm); pearl millet, proso millet, and grain Amaranth (grains) at 1 ppm; teosinte and popcorn (grains); grass, forage, fodder and hay (crop group 17); and animal feed, nongrass (crop group 18) at 0.02 ppm; turnip greens at 10 ppm; cilantro, and watercress at 8 ppm; tropical fruits (sugar apple, cherimoya, atemoya, custard apple, ilama, soursop, biriba, lychee, longan, spanish lime, rambutan, pulasan, papaya, star apple, black sapote, mango, sapodilla, canistel, mamey sapote, avocado, guava, feijoa, jaboticaba, wax jambu, starfruit, passion fruit, acerola, and white sapote) at 0.3 ppm; ti palm at 10 ppm. Additionally, IR-4 requested a tolerance for spinosad on pistachio at 0.02 ppm under conditional registration. Spinosad is manufactured by Dow AgroSciences LLC, 9330 Zionsville Road, Indianapolis, IN 46268.

EPA has determined that the petition contains data or information regarding the elements set forth in section 408(d)(2) of the FFDCA; however, EPA has not fully evaluated the sufficiency of the submitted data at this time or whether the data support granting of the petition. Additional data may be needed before EPA rules on the petition.

A. Residue Chemistry

1. *Plant metabolism*. The metabolism of spinosad in plants (apples, cabbage, cotton, tomato, and turnip) and animals (goats and poultry) is adequately understood for the purposes of these tolerances. A rotational crop study showed no carryover of measurable spinosad related residues in representative test crops.

2. *Analytical method*. There is a practical method (immunoassay) for detecting (0.005 ppm) and measuring (0.01 ppm) levels of spinosad in or on food with a limit of detection (LOD) that allows monitoring of food with residues at or above the level set for these tolerances. The method has had a successful method tryout in EPA's laboratories.

3. *Magnitude of residues*. No additional residue data are being submitted in support of the proposed residue tolerances. Previously submitted cereal grain crops residue data in support of a pending tolerance petition (PP 8F5002) are to be used for barley, buckwheat, oats, and rye (wheat residue studies); pearl millet, proso millet, and grain Amaranth (sorghum residue studies); and popcorn and teosinte (field corn residue studies). In the same petition, there is a pending tolerance of 1 ppm for forage, fodder, hay, and straw of cereal grains (crop group 16). Previously submitted residue data in support of the established residue tolerance on Brassica (cole) leafy vegetables, greens subgroup are to be used for turnip greens and ti palm. Previously submitted residue data in support of the established residue tolerance on leafy vegetables (except Brassica) are to be used for cilantro and watercress. Previously submitted residue data in support of almond are used for pistachio. Previously submitted residue data in support of established residue tolerances on citrus fruits and apples and a pending residue tolerance (PP 8F5002) on stone fruits are to be used for tropical fruits. The use pattern (low application rate and spot treatment nature) associated with the forage crops (crop groups 17 and 18) indicates that no residue data are needed to establish a limit of quantitation (LOQ) tolerance.

As a condition for registration of spinosad on pistachios, the Agency requires IR-4 to fulfill the guideline requirements of a total of five completed field rials on representative commodities for Crop Group 14, almonds and pecans.

B. Toxicological Profile

1. *Acute toxicity—Spinosad has low acute toxicity*. The rat oral lethal dose (LD_{50}) is 3,738 milligrams/kilograms (mg/kg) for males and > 5,000 mg/kg for females, whereas the mouse oral LD_{50} is > 5,000 mg/kg. The rabbit dermal LD_{50} is > 5,000 mg/kg and the rat inhalation lethal concentration (LC_{50}) is > 5.18 milligrams/liter (mg/L) air. In addition, spinosad is not a skin sensitizer in guinea pigs and does not produce significant dermal or ocular irritation in rabbits. End use formulations of spinosad that are water-based suspension concentrates have similar low acute toxicity profiles.

2. *Genotoxicity*. Short-term assays for genotoxicity consisting of a bacterial reverse mutation assay (Ames test), an *in vitro* assay for cytogenetic damage using the Chinese hamster ovary cells, an *in vitro* mammalian gene mutation assay using mouse lymphoma cells, an *in vitro* assay for DNA damage and repair in rat hepatocytes, and an *in vivo* cytogenetic assay in the mouse bone marrow (micronucleus test) have been conducted with spinosad. These studies show that spinosad does not elicit a genotoxic response.

3. *Reproductive and developmental toxicity*. Spinosad caused decreased body weight (bwt) in maternal rats given 200 mg/kg/day by gavage, the highest dose tested (HDT). This was not accompanied by either embryo toxicity, fetal toxicity, or teratogenicity. The no observed adverse effect levels (NOAELs) for maternal toxicity and fetal toxicity in rats were 50 and 200 mg/kg/day, respectively. A teratology study in rabbits showed that spinosad caused decreased bwt gain and a few abortions in maternal rabbits given 50 mg/kg/day, the HDT. Maternal toxicity was not accompanied by either embryo toxicity, fetal toxicity, or teratogenicity. The NOAELs for maternal and fetal toxicity in rabbits were 10 and 50 mg/kg/day, respectively. In a 2-generation reproduction study in rats, parental toxicity was observed in both males and females given 100 mg/kg/day, the HDT. Perinatal effects (decreased litter size and pup weight) at 100 mg/kg/day were attributed to maternal toxicity. The NOAEL for maternal and pup effects was 10 mg/kg/day.

4. *Subchronic toxicity*. Spinosad was evaluated in 13–week dietary studies and showed NOAELs of 4.89 and 5.38 mg/kg/day, respectively in male and female dogs; 6 and 8 mg/kg/day, respectively in male and female mice; and 33.9 and 38.8 mg/kg/day, respectively in male and female rats. No dermal irritation or systemic toxicity occurred in a 21–day repeated dose dermal toxicity study in rabbits given 1,000 mg/kg/day.

5. *Chronic toxicity*. Based on chronic testing with spinosad in the dog and the rat, the EPA has set a chronic population adjusted dose (cPAD) of 0.027 mg/kg/day for spinosad. The cPAD has incorporated a 100-fold uncertainty factor to the NOAELs found in the chronic dog study to account for interspecies and intraspecies variation. cPAD is equivalent to the reference dose (RfD) divided by the Food Quality Protection Act (FQPA) safety factor (SF). For spinosad, EPA has determined that the additional 10x SF to account for enhanced sensitivity of infants and children be reduced to 1x, i.e., removed. Thus, the cPAD of 0.027 mg/kg/day is equivalent to the chronic RfD. The NOAELs shown in the dog chronic study were 2.68 and 2.72 mg/kg/day, respectively for male and female dogs. The NOAELs (systemic) shown in the rat chronic/carcinogenicity/neurotoxicity studies were 9.5 and 12.0 mg/kg/day, respectively for male and female rats. Using the Guidelines for Carcinogen Risk Assessment published September 24, 1986 (51 FR 33992), it is proposed that spinosad be classified as Group E for carcinogenicity (no evidence of carcinogenicity) based on the results of carcinogenicity studies in two species. There was no evidence of carcinogenicity in an 18–month mouse feeding study and a 24–month rat feeding study at all dosages tested. The

NOAELs shown in the mouse carcinogenicity study were 11.4 and 13.8 mg/kg/day, respectively for male and female mice. A maximum tolerated dose was achieved at the top dosage level tested in both of these studies based on excessive mortality. Thus, the petitioner believes that the doses tested are adequate for identifying a cancer risk and that a cancer risk assessment is not needed.

6. *Animal metabolism*. There were no major differences in the bioavailability, routes or rates of excretion, or metabolism of spinosyn A and spinosyn D following oral administration in rats. Urine and fecal excretions were almost completed in 48 hours post-dosing. In addition, the routes and rates of excretion were not affected by repeated administration.

7. *Metabolite toxicology*. The residue of concern for tolerance setting purposes is the parent material (spinosyn A and spinosyn D). Thus, there is no need to address metabolite toxicity.

8. *Endocrine disruption*. There is no evidence to suggest that spinosad has an effect on any endocrine system.

C Aggregate Exposure

1. *Dietary exposure*—i. *Food*. For purposes of assessing the potential dietary exposure from use of spinosad on the RACs listed in this notice as well as from other existing and pending spinosad crop uses, a conservative estimate of aggregate exposure is determined by basing the Theoretical Maximum Residue Contribution (TMRC) on the proposed tolerance level for spinosad and assuming that 100% of these proposed new crops and other pending and existing (registered for use) crops grown in the United States were treated with spinosad. The TMRC is obtained by multiplying the tolerance residue levels by the consumption data which estimates the amount of crops and related foodstuffs consumed by various population subgroups. The use of a tolerance level and existing and pending spinosad crop uses, a conservative estimate of aggregate exposure is determined by basing the TMRC on the proposed tolerance level for spinosad and assuming that 100% of these proposed new crops and other pending and existing (registered for use) crops grown in the United States were treated with spinosad. The TMRC is obtained by multiplying the tolerance residue levels by the consumption data which estimates the amount of crops and related foodstuffs consumed by various population subgroups. The use of a tolerance level and 100% of crop treated clearly results in an overestimate of human exposure and a safety determination for the use of spinosad on crops cited in this summary that is based on a conservative exposure assessment.

ii. *Drinking water*. Another potential source of dietary exposure to pesticides is residues in drinking water. Based on the available environmental studies conducted with spinosad wherein its properties show little or no mobility in soil, there is no anticipated exposure to residues of spinosad in drinking water. In addition, there is no established maximum concentration level for residues of spinosad in drinking water.

2. *Non-dietary exposure*. Spinosad is currently registered for use on a number of crops including cotton, fruits, and vegetables in the agriculture environment. Spinosad is also currently registered for outdoor use on turf and ornamentals at low rates of application (0.04 to 0.54 pounds of active ingredient per acre (lbs a.i./ per acre) and indoor use for drywood termite control (extremely low application rates used with no occupant exposure expected). Thus, the potential for non-dietary exposure to the general population is considered negligible.

D. Cumulative Effects

The potential for cumulative effects of spinosad and other substances that have a common mechanism of toxicity is also considered. In terms of insect control, spinosad causes excitation of the insect nervous system, leading to involuntary muscle contractions, prostration with tremors, and finally paralysis. These effects are consistent with the activation of nicotinic acetylcholine receptors by a mechanism that is clearly novel and unique among known insecticidal compounds. Spinosad also has effects on the gamma aminobatopic acid (GABA) receptor function that may contribute further to its insecticidal activity. Based on results found in tests with various mammalian species, spinosad appears to have a mechanism of toxicity like that of many amphophilic cationic compounds. There is no reliable information to indicate that toxic effects produced by spinosad would be cumulative with those of any other pesticide chemical. Thus it is appropriate to consider only the potential risks of spinosad in an aggregate exposure assessment.

E. Safety Determination

1. *U.S. population*. Using the conservative exposure assumptions and the cPAD, the aggregate exposure to spinosad use on other pending and existing crop uses will utilize 25.5% of the cPAD for the U.S. population. A more realistic estimate of dietary exposure and risk relative to a chronic toxicity endpoint is obtained if average anticipated residue values from field trials are used. Inserting the average residue values in place of tolerance residue levels produces a more realistic, but still conservative risk assessment. Based on average anticipated residue levels in a dietary risk analysis, the use of spinosad on other pending and existing crop uses will utilize 4.1% of the cPAD for the U.S. population. EPA generally has no concern for exposures below 100% of the cPAD because the cPAD represents the level at or below which daily aggregate dietary exposure over a lifetime will not pose appreciable risks to human health. The new crop uses proposed in this notice are minor uses. The petitioner expects these uses to contribute only a negligible impact to the cPAD, and also believes that there is reasonable certainty that no harm will result from aggregate exposure to spinosad residues on existing and all pending crop uses including the ones listed in this notice.

2. *Infants and children*. In assessing the potential for additional sensitivity of infants and children to residues of spinosad, data from developmental toxicity studies in rats and rabbits and a 2-generation reproduction study in the rat are considered. The developmental toxicity studies are designed to evaluate adverse effects on the developing organism resulting from pesticide exposure during prenatal development. Reproduction studies provide information relating to effects from exposure to the pesticide on the reproductive capability and potential systemic toxicity of mating animals and on various parameters associated with the well-being of pups.

FFDCA section 408 provides that EPA may apply an additional safety factor for infants and children in the case of threshold effects to account for prenatal and postnatal toxicity and the completeness of the data base. Based on the current toxicological data requirements, the data base for spinosad relative to prenatal and postnatal effects for children is complete. Further, for spinosad, the NOAELs in the dog chronic feeding study which were used to calculate the cPAD (0.027 mg/kg/day) are already lower than the NOAELs from the developmental studies in rats and rabbits by a factor of more than 10-fold.

Concerning the reproduction study in rats, the pup effects shown at the HDT were attributed to maternal toxicity. Therefore, the petitioner concludes that an additional uncertainty factor is not needed and that the cPAD at 0.027 mg/

kg/day is appropriate for assessing risk to infants and children.

In addition, EPA has determined that the 10x factor to account for enhanced sensitivity of infants and children is not needed for spinosad because: (i) The data provided no indication of increased susceptibility of rats or rabbits to *in utero* and/or postnatal exposure to spinosad. In the prenatal developmental toxicity studies in rats and rabbits and 2-generation reproduction in rats, effects in the offspring were observed only at or below treatment levels which resulted in evidence of parental toxicity, (ii) no neurotoxic signs have been observed in any of the standard required studies conducted, and (iii) the toxicology data base is complete and there are no data gaps.

Using the conservative exposure assumptions previously described as tolerance level residues, the percent cPAD utilized by the aggregate exposure to residues of spinosad on other pending and existing crop uses is 51.2% for children 1 to 6 years old, the most sensitive population subgroup. If average or anticipated residues are used in the dietary risk analysis, the use of spinosad on these crops will utilize 9.4% of the cPAD for children 1 to 6 years old. The new crop uses proposed in this notice are minor ones and are expected to contribute only a negligible impact to the cPAD. Thus, based on the completeness and reliability of the toxicity data and the conservative exposure assessment, the petitioner concludes that there is a reasonable certainty that no harm will result to infants and children from aggregate exposure to spinosad residues on the above proposed uses including other pending and existing crop uses.

F. International Tolerances

There are no Codex maximum residue levels established for residues of spinosad on barley, buckwheat, oats, rye, pearl millet, proso millet, grain Amaranth, teosinte, popcorn, turnip greens, cilantro, watercress, tropical fruit, ti palm, grass forage, fodder, and hay (crop group 17), and nongrass animal feeds (crop group 18) or any other food or feed crop.

2. Sipcam Agro USA, Inc.

PP 9F5066, 9F6023, and 7E4830

EPA has received three pesticide petitions [9F5066, 9F6023, and 7E4830] from Sipcam Agro USA, Inc., 70 Mansell Court, Suite 230, Rosewell, GA 30076 proposing, pursuant to section 408(d) of the FFDCA, 21 U.S.C. 346a(d), to amend 40 CFR part 180 by establishing tolerances for residues of 1-2(2,4-dichlorophenyl)-3-(1,1,2,2-tetrafluoroethoxy)propyl-1H-1,2,4-triazole (Tetraconazole) in or on the RAC of beets, sugar at 0.01 ppm; beets, sugar, roots at 0.1 ppm; beets, sugar, tops at 7.0 ppm; beets, sugar, pulp, dried at 0.3 ppm; and beets, sugar, molasses at 0.3 ppm (9F5066), peanuts meat (hulls removed) at 0.03 ppm, peanuts meal at 0.03 ppm, and peanuts oil at 0.1 ppm (9F6023), and imported bananas at 0.2 ppm (7E4830) and in animal commodities of milk at 0.02 ppm; cattle, meat at 0.01 ppm; cattle meat byproducts at 2.0 ppm and cattle fat at 0.1 ppm (9F5066). EPA has determined that the petitions contain data or information regarding the elements set forth in section 408(d)(2) of the FFDCA; however, EPA has not fully evaluated the sufficiency of the submitted data at this time or whether the data supports granting of the petition. Additional data may be needed before EPA rules on the petition.

A. Residue Chemistry

1. *Plant metabolism*. The nature of the residue of tetraconazole in plants was studied extensively in wheat, grapes and sugar beets. The principal compounds found in all three plant species were unchanged tetraconazole and the degradation product triazole. Evidence was found for more extensive metabolism in plant tissues to form bound residues that were incorporated into the structural matrices (cellulose and lignin) surrounding plant cells.

2. *Analytical method*. An analytical residue method utilizing gas chromatography with electron capture detection is available for enforcement purposes, which has been validated among all banana, sugar beet, and peanut raw and processed matrices, as well as for milk, meat, and meat byproduct matrices. This method is described within the magnitude of residue studies provided to EPA in support of the petitions for tolerances pertaining to bananas, sugar beets, and peanut matrices.

3. *Magnitude of residues*—i. *Banana*. Residue data from a study conducted with tetraconazole applied in the field to banana plants at 12 locations in the field throughout Latin America to support establishment of a tolerance of 0.2 ppm (unbagged, whole fruit basis) for residues of tetraconazole on bananas. The magnitude of residues on the edible pulp portion of the fruit grown under typical banana cultivation practices was less than 0.02 ppm, which is the maximum anticipated residue to be used for dietary exposure risk assessment.

ii. *Sugar beets*. Residue data from a study conducted with tetraconazole applied to sugar beets in the field at 11 locations in the United States in the manner proposed for registration, and a further study among the products of sugar beet processing, support the establishment of tolerances for residues of tetraconazole on sugar beet roots at a level of 0.1 ppm, on sugar beet tops at 7 ppm, in sugar beet pulp (dried) and in (sugar beet) molasses at 0.3 ppm, and in refined (sugar beet) sugar at 0.01 ppm. A magnitude of residue study conducted with lactating dairy cows fed tetraconazole for a duration of 28 days, followed by terminal sacrifice and analysis of tissues, supports the establishment of tolerances for residues of tetraconazole in milk at 0.02 ppm, in cattle meat at 0.01 ppm, in cattle meat byproducts at 2 ppm, and in cattle fat at 0.1 ppm.

iii. *Peanuts*. Residue data from a study conducted with tetraconazole applied to peanuts in the field at 12 locations in the United States in the manner proposed for registration, and a further study among the products of peanut processing, support the establishment of tolerances for residues of tetraconazole on peanuts (nutmeats) at a level of 0.03 ppm, and in processed peanut meal and oil at 0.03 ppm and 0.1 ppm, respectively.

B. Toxicological Profile

1. *Acute toxicity*. Acute toxicity studies with technical grade tetraconazole include: an acute oral dose study in the rat which demonstrated an average (both sexes) LD_{50} level of 1,140 mg/kg bwt; an acute dermal dose toxicity study on the rat which indicated an LD_{50} > 2,000 mg/kg; a 4–hour inhalation study in the rat which found the LD_{50} to be greater than 3.66 mg/L of air (MMAD 1.1 microns); a primary eye irritation study with rabbit, indicating that tetraconazole may be a slight eye irritant; a primary dermal irritation study in rabbit showing tetraconazole to be non-irritating; and a dermal sensitization study on guinea pig which demonstrated that tetraconazole was not a skin sensitizer.

2. *Genotoxicty*. The mutagenic potential of tetraconazole has been evaluated in five studies including: a reverse gene mutation assay in *Salmonella typhimurium* cells; a cell mutation assay in mouse lymphoma L5178Y cells *in vitro*, with and without metabolic activation; a chromosomal aberration assay in Chinese hamster ovary cells *in vitro*, with and without metabolic activation; a mouse bone marrow micronucleus assay *in vivo*; and an unscheduled DNA synthesis assay in

HeLa epithelioid cells. All studies were negative for genotoxicity and/or mutagenic potential.

3. *Reproductive and developmental toxicity.* A developmental toxicity study with rats given oral gavage doses of 5, 22.5, and 100 mg/kg/day from days 6 through 15 of gestation resulted in a NOAEL for maternal toxicity of 5 mg/kg/day based upon bwt reduction, reduced food intake and post-dose salivation at the two higher doses, as compared with zero-dose controls. The developmental NOAEL was 22.5 mg/kg/day. Among the highest dose group there was evidence of minimal increase in the incidence of supernumerary ribs among the fetuses.

A developmental toxicity study in rabbits given oral gavage doses of 7.5, 15, and 30 mg/kg/day on days 6 through 18 of gestation resulted in a maternal NOAEL of 15 mg/kg/day. Effects observed in the dams in the high-dose group were decreased bwt gain and reduced food consumption as compared with zero-dose controls. There were no developmental effects observed in this study.

A 2-generation reproduction study in rats fed diets containing 10, 70, and 490 ppm resulted in a reproductive NOAEL of 10 ppm (0.6 mg/kg/day) based upon toxicity to the dam, slightly retarded growth rate in offspring at the higher two doses, and slightly increased liver weights in offspring at the highest dose, as compared with zero-dose controls.

4. *Subchronic toxicity.* A 90–day oral subchronic toxicity study was conducted with technical grade tetraconazole in rats at 10, 60, and 360 ppm in the diet. Treatment related increased liver weights and centrilobular hepatocyte enlargement were observed at the two highest dose levels. The NOAEL was 10 ppm (0.8 mg/kg/day), by comparison with data from the zero-dose control group.

A 90–day oral subchronic toxicity study was conducted in mice with dietary concentrations of technical grade tetraconazole at 5, 25, 125, and 625 ppm. The two highest dosages resulted in liver enlargement, accentuated lobular markings and liver pallor. Microscopic tissue alterations related to tetraconazole were liver enlargement at the three highest doses and single cell necrosis/degeneration and/or areas of necrosis at the two highest doses. The NOAEL was 5 ppm (1 mg/kg/day).

5. *Chronic toxicity.* A 12–month chronic oral toxicity study in Beagle dogs was conducted with technical tetraconazole at dose levels of 0.7, 2.8, and 5.6 mg/kg/day (22.5, 90, and 360 ppm dietary concentrations, respectively). At the highest dose, liver and kidney weights and cholesterol levels were elevated, and liver injury occurred based upon increased levels of GPT, δ-GT and OCT. The no effect level was 0.7 mg/kg/day, as compared with zero-dose control animals.

A chronic (full-lifetime) feeding/carcinogenicity study was conducted with Crl:CD(SD)BR rats fed tetraconazole at dietary levels of 10, 80, 640, and 1,280 ppm for 104 weeks in males and 10, 80, and 640 ppm for 104 weeks in females. In the liver, changes such as hepatocyte enlargement and increased incidence of eosinophilic hepatocytes, seen at doses of 80, 640, or 1,280 ppm were associated with hepatic enzyme induction.

The class of compounds (triazoles) to which tetraconazole belongs is known to induce liver microsomal enzymes. The follicular cell hypertrophy and cystic follicular hyperplasia of the thyroid seen in male rats at 1,280 ppm are also likely to be linked to the hepatic changes. Compounds such as phenobarbital are also known to induce thyroid changes in rats due to increased hepatic clearance of thyroxin, mediated by hepatic enzyme induction.

A special mechanistic study was conducted in order to more fully determine the potential role of microsomal enzyme induction by tetraconazole administered in the diet upon the histopathologic findings in rat. Dietary administration of tetraconazole to rats for 4 weeks resulted in the induction of cytochrome P450, including those of the CYP2B and 3A subfamilies, and of UDP-glucuronyl transferase.

Chronic dietary administration of tetraconazole to rats did not induce a carcinogenic response. No increase in tumors was noted at the high dose groups among males or females. The liver was the target organ. There was a marginal increase in benign liver cell tumors among male rats fed 640 ppm but these were not statistically significant and not dose-related, and the benign tumors did not progress to malignant liver cell tumors. There were some changes in the liver at 80 ppm, whereas 10 ppm (approximately 0.6 mg/kg/day) was observed to be the NOAEL.

The incidence of foci or areas of basophilic hepatocytes was greater in male rats given 10, 80, or 640 ppm than in zero-dose controls. This is a common spontaneous age-related change which showed no dose relationship in this study and is considered unlikely to be of toxicological importance.

A chronic feeding/carcinogenicity study was conducted with tetraconazole in Crl:CD-l (ICR)BR mice at dietary levels of 10, 90, 800, and 1,250 ppm for 80 weeks. Treatment-related non-neoplastic changes were also seen at 1,250 ppm in the lungs, kidneys, testes, epididymides, ovaries and bone, particularly the cranium; a compression of the brain was noted in a number of mice reflecting the extent of cranial bone changes and an increased thymic involution was seen in male mice that died on test. The 1,250 ppm dietary level for tetraconazole, because of the substantial bwt gain changes and increased mortality (more in males), appeared to be above the maximum tolerated dose (MTD). At 800 ppm, there were increases in non neoplastic changes in lungs, kidneys, testes, epididymides, ovaries and bone. In addition, there was substantial reduction in weight gain as compared with zero-dose control animals, but the mortality rate was unaffected. Eight hundred ppm appeared to be a reasonable estimate of the MTD for mouse.

At 90 ppm, non-neoplastic changes were detected in bone and the epididymides in addition to liver changes. No treatment-related findings were seen in mice treated at 10 ppm (approximately 1.5 mg/kg/day), and this dose level was defined as the NOAEL.

In this same study, an increased incidence of benign liver cell tumors was observed in males and females fed 800 ppm, and an increased incidence of benign and malignant liver cell tumors in males and females given 1,250 ppm. These tumors were associated with increased signs of hepatotoxicity including hepatocyte vacuolation and fat deposition at 90, 800, and 1,250 ppm; granulomatous inflammation, pigmented macrophages, bile duct hyperplasia and pericholangitis in mice given 800 and 1,250 ppm. In addition, there was evidence of treatment-related hepatocellular enlargement and increased numbers of altered foci of eosinophilic and basophilic hepatocytes in both sexes given 800 and 1,250 ppm; eosinophilic hepatocytes were noted in male (only) mice receiving 90 ppm.

Tetraconazole is a triazole, and this class of compounds is known to induce liver microsomal enzymes. A special mechanistic study was conducted in order to more fully determine the potential role of microsomal enzyme induction by tetraconazole administered in the diet upon the formation of tumors in mouse. Dietary administration of tetraconazole to mice for 4 weeks results in the induction of cytochrome P450-related activities, as well as the concentrations of microsomal protein and cytochrome P450, and of the phase II activity, and p-nitrophenol UDP-

glucuronyl transferase activity. The effects of tetraconazole on the cytochrome P450-dependent MFO system were somewhat different from those of phenobarbital. Many of these enzymes have not been as well-characterized in mice compared to rats. However, the phase II enzyme activity increases were similar to those of phenobarbital. It is concluded from these studies that prolonged induction of liver microsomal enzymes and/or production of sustained liver injury can lead to the formation of liver tumors in mice.

6. *Animal metabolism*. Four metabolism studies (rat and goat triazole- and phenyl-labeled) were conducted in animals with ^{14}C labeled tetraconazole. In the rat the initial metabolism proceeded through cleavage of the tetrafluoroethyl ether moiety, followed by a 2-step oxidation to tetraconazole-acid. In the goat the initial oxidation step formed tetraconazole-difluoroacetic acid, followed by ether cleavage to tetraconazole-alcohol, then further oxidation to tetraconazole-acid. In both the rat and the goat, the tetraconazole-acid functional group was enzymatically displaced, and the resulting thioether was oxidized to tetraconazole-acid-methyl-sulfoxide. An alternative pathway for tetraconazole-alcohol degradation was to form either glucuronide derivatives of tetraconazole-alcohol, or enzymatic triazole displacement to form dichlorophenyl-acetyl-cysteine. The nature of the residue in the goat is adequately understood for the purpose of regulating dietary exposure to residues. The liver retained the highest radioactivity, and muscle contained the lowest radioactivity. Tetraconazole was found to be the major residue in the liver and fat, and triazole was the major residue in milk, muscle and kidney.

7. *Endocrine disruption*. Based upon the findings from all of the full-lifetime and chronic toxicology studies, teratogenicity, mutagenicity and multi-generational reproductive studies conducted with tetraconazole, it is concluded that there were no indications of any potential to cause disruption or modification of endocrine function among any of the four animal species that have been studied (rat, mouse, rabbit and dog). Among the studies conducted with these four species there were no behavioral, reproductive or teratogenic effects, or histopathological changes in endocrine sensitive tissues such as the uterus, ovaries, mammary glands, or the testes.

C. Aggregate Exposure

1. *Dietary exposure*. Tolerances have been proposed to accompany uses proposed for tetraconazole products on bananas, sugar beets and peanuts. Tolerance-level residues may be utilized to conduct dietary exposure risk assessments, except that for bananas, the anticipated residue would be only 10% of the tolerance level because more than 90% of the residue on a whole-fruit basis remained on the peel.

Drinking water. A drinking water exposure assessment was performed for surface water with the screening model generic expected environmental concentration (GENEEC), using the input parameters represented by the environmental fate data obtained for tetraconazole in guideline-compliant studies. The model SCI-GROW was utilized to perform a ground water exposure assessment. The combined predicted levels of exposure in drinking water from surface and ground water, without any mitigation by means of filtration or other treatments typically applied to human drinking water, were 0.32 micrograms/kg/day for the highest-exposure age cohort nursing and non-nursing infants (> 1 year), or 5.3% of the chronic reference dose (RfD). The level of exposure to infants through drinking water, coupled with the maximum dietary exposure for non-nursing infants, thereby resulted in a maximum combined potential exposure of 0.90 micrograms/kg/day, or 15.1% of the RfD.

2. *Non-dietary exposure*. Tetraconazole products are not yet registered for any uses in the United States, however there is a pending registration for usage on turf grass which would permit applications to golf courses, commercial turf grass and sod farms. Tetraconazole products will be labeled so as to prohibit applications on residential turf grass. Tetraconazole products are not intended for registration or utilization in any setting which would contribute to human exposure in households or residential vicinities.

D. Cumulative Effects

Tetraconazole is a member of a class of compounds with structures containing 1,2,4-triazole substituents. Data are not yet available to determine whether tetraconazole has a common mechanism of toxicity in mammalian systems with other substances, or how to include this pesticide in a cumulative risk assessment.

E. Safety Determination

1. *U.S. population*. The lowest dietary NOAEL for tetraconazole in chronic or subchronic studies, expressed in terms of bwt dose on a daily basis, was confirmed in two studies to be 0.6 mg/kg/day. These two studies were the chronic/oncogenicity (full-lifetime) study in rat, and the 2-generation reproduction study in rat. Therefore the chronic RfD to be used for human exposure risk assessment should be 0.006 mg/kg/day by incorporation of both a 10-fold interspecies safety factor and a 10-fold intraspecies safety factor. A chronic dietary exposure analysis dietary risk evaluation system (DRES) was conducted for tetraconazole, conservatively assuming tolerance-level residues in/on bananas, sugar beets, and peanuts, including all secondary processed commodity tolerances associated with these crops plus milk, meat and meat byproducts. The maximum potential dietary exposure of tetraconazole to the U.S. population was calculated to be 0.223 micrograms/kg/day, or 4.5% of the chronic RfD.

For acute effects, the lowest NOAEL for tetraconazole was observed for maternal effects in the rat developmental study at 5 mg/kg/day, wherein decreased maternal bwt and food consumption were observed at the lowest observed adverse levels (LOAELs) of 22.5 mg/kg/day; therefore, the acute RfD for human exposure risk assessments is 0.05 mg/kg/day. An acute dietary exposure analysis was performed, focusing upon females aged 13 to 50 years, based upon the acute RfD. The dietary exposure model EXPedite predicted a maximum (99.9th percentile) potential dietary exposure level of 1.06 micrograms/kg/day for females of childbearing age, which represents 2.1% of the acute RfD.

2. *Infants and children*. There is a complete data base for tetraconazole which includes prenatal and postnatal developmental and reproduction toxicity data. In a 2-generation reproduction study with rats, all reproductive parameters investigated showed no treatment-related effects except slightly retarded growth rate and slightly increased liver weight at weaning in the offspring at the highest dose of 35.8 mg/kg/day. The NOAEL for reproductive effects in offspring was 4.8 mg/kg/day, which was 12 times higher than the NOAEL for toxicity effects in the dams. Thus the available evidence suggests that mammalian offspring would be less sensitive to potential toxicological effects from tetraconazole than would adults.

In the developmental toxicity (teratology) study conducted in the rat, tetraconazole did not cause any developmental effects in fetuses at 22.5 mg/kg/day even when maternal toxicity

was observed. In the rabbit a dose level of 30 mg/kg/day caused maternal toxicity, but there were no developmental effects.

The extensive data base that is available for tetraconazole contains no indication that tetraconazole would represent any unusual or disproportionate hazard to infants or children. Therefore there is no need to impose additional safety factors above the 10x interspecific uncertainty factor, coupled with the 10x intraspecific uncertainty factor, for conducting risk assessments pertaining to infants or children.

A chronic DRES was conducted for tetraconazole, conservatively assuming tolerance-level residues in/on bananas, sugar beets, and peanuts, including all secondary processed commodity tolerances associated with these crops plus milk, meat, and meat byproducts. The highest potential dietary exposures to non-nursing infants less than l–year old and children 1 to 6 years old were 0.552 micrograms/kg/day and 0.527 micrograms/kg/day, or 11% and 10.5% of the chronic RfD, respectively. These were the two age cohorts which represented the highest proportionate utilization of the chronic reference dose.

F. International Tolerances

There are no established Codex, Canadian, or Mexican tolerances (MRLs) established for tetraconazole. No MRLs for tetraconazole have been established under the EU uniform code for pesticide registrations. The following MRLs (expressed in ppm) have been established for tetraconazole residues on sugarbeet roots; Belgium, France, Portugal, Spain (0.05); Hungary (0.1); and Italy (0.2). In addition to sugar beets, the following MRLs (in ppm) for tetraconazole have also been established in the following countries for several RACs; apples, and/or pome fruits (Israel, Spain 0.2, France 0.3, Italy, Portugal, Poland 0.5); grapes (Israel, Jordan, France, Portugal, Spain 0.2, Italy 0.5); stone fruits (Italy, Spain 0.2); cucumbers (Italy, Poland, Egypt, Jordan 0.2); melons (Egypt, Jordan, Italy 0.05, Israel 0.2); peaches and/or stone fruits (Italy, Spain 0.2); wheat grain (Morocco, Belgium, France, Hungary, Poland, Italy, Portugal, United Kingdom 0.05); oat grain (United Kingdom 0.1); barley grain (Italy 0.1, United Kingdom 0.2); tomatoes (Egypt, Israel, Jordan 0.2); and mango (Israel 0.2).

[FR Doc. 99–26861 Filed 10–13–99; 8:45 am]

BILLING CODE 6560–50–F

ENVIRONMENTAL PROTECTION AGENCY

[FRL–6458]

Notice of Proposed Prospective Purchaser Agreement Pursuant to the Comprehensive Environmental Response, Compensation, and Liability Act of 1980, as Amended by the Superfund Amendments and Reauthorization Act, Wellington Neighborhood Property, French Gulch/ Wellington-Oro Site

AGENCY: Environmental Protection Agency (EPA).

ACTION: Notice; request for public comment.

SUMMARY: Notification is hereby given of a Proposed Prospective Purchaser Agreement (PPA) associated with the Wellington Neighborhood Property near the French Gulch/Wellington-Oro Site, Summit County, Colorado. This Agreement is subject to final approval after the comment period. The Prospective Purchaser Agreement would resolve certain potential EPA claims under sections 106 and 107 of the Comprehensive Environmental Response, Compensation, and Liability Act of 1980 as amended by the Superfund Amendments and Reauthorization Act of 1986 (CERCLA), against Brynn Grey V LLC. and Wellington Neighborhood, LLC., the prospective purchasers (the purchasers).

The settlement would require the purchasers to cover and maintain areas of the property containing elevated levels of metals. The purchasers intend to develop the property for deed restricted affordable housing consistent with a master plan approved by local authorities. The purchasers will regrade areas disturbed by historical placer mining, will provide EPA with access to the property, will allow the use of a motion of the property for construction of response actions, if necessary, and will deposit funds for the purchase of the property into an EPA special account.

For seven (7) days following the date of publication of this document, the Agency will receive written comments relating to the proposed settlement. The Agency's response to any comments received will be available for public inspection at the Superfund Records Center at the U.S. Environmental Protection Agency, Region VIII, 999 18th Street, Denver, Colorado, 80202.

DATES: Comments must be submitted within seven (7) days from the date of this publication.

AVAILABILITY: The proposed settlement is available for public inspection at the U.S. Environmental Protection Agency, Region VIII, 999 18th Street, Denver, Colorado, 80202. A copy of the proposed Agreement may be obtained from the Superfund Records Center, U.S. Environmental Protection Agency, Region VIII, 999 18th Street, Suite 500, Denver, Colorado, 80202, 301/312–6473. Comments should reference the Wellington Neighborhood Property and should be forwarded to Andy Lensink, Enforcement Attorney, at the U.S. Environmental Protection Agency, Region VIII, 8ENF–T, 999 18th Street, Denver, Colorado, 80202.

FOR FURTHER INFORMATION CONTACT: Andy Lensink, U.S. Environmental Protection Agency, Region VIII, 8ENF–T, 999 18th Street, Denver, Colorado, 80202. (303) 312–6908.

It is so agreed:

Max H. Dodson,

Assistant Regional Administrator, Office of Ecosystems Protection & Remediation, U.S. Environmental Protection Agency, Region VIII.

[FR Doc. 99–26808 Filed 10–13–99; 8:45 am]

BILLING CODE 6560–50–M

EQUAL EMPLOYMENT OPPORTUNITY COMMISSION

Agency Information Collection Activities: Extension of Existing Collection; Comment Request

AGENCY: Equal Employment Opportunity Commission.

ACTION: Notice of Information Collection Under Review; Local Union Report (EEO–3).

SUMMARY: In accordance with section 3506(c)(2)(A) of the Paperwork Reduction Act of 1995, the Equal Employment Opportunity Commission (EEOC) announces that it intends to submit to the Office of Management and Budget (OMB) a request for an extension of the existing information collection listed below.

DATES: Written comments on this notice must be submitted on or before December 13, 1999.

ADDRESSES: Comments should be submitted to Frances M. Hart, Executive Officer, Executive Secretariat, Equal Employment Opportunity Commission, 10th Floor, 1801 L Street, NW, Washington, DC 20507. As a convenience to commentators, the Executive Secretariat will accept comments transmitted by facsimile (''FAX'') machine. The telephone number of the FAX receiver is (202) 663–4114. (This is not a toll-free number.) Only comments of six or fewer

pages will be accepted via FAX transmittal. This limitation is necessary to assure access to the equipment. Receipt of FAX transmittals will not be acknowledged, except that the sender may request confirmation of receipt by calling the Executive Secretariat staff at (202) 663–4078 (voice) or (202) 663–4074 (TDD). (These are not toll-free telephone numbers.) Copies of comments submitted by the public will be available to review at the Commission's library, Room 6502, 1801 L Street, NW, Washington, DC 20507 between the hours of 9:30 and 5:00 p.m.

FOR FURTHER INFORMATION CONTACT: Joachim Neckere, Director, Program Research and Surveys Division, 1801 L Street, NW, Room 9222, Washington, DC 20507, (202) 663–4958 (voice) or (202) 663–7063 (TDD).

SUPPLEMENTARY INFORMATION: The Commission solicits public comment to enable it to:

(1) Evaluate whether the proposed collection of information is necessary for the proper performance of the Commission's functions, including whether the information will have practical utility;

(2) Evaluate the accuracy of the Commission's estimate of the burden of the proposed collection of information, including the validity of the methodology and assumptions used;

(3) Enhance the quality, utility, and clarity of the information to be collected; and

(4) Minimize the burden of the collection of information on those who are to respond, including the use of appropriate automated, electronic, mechanical, or other technological collection techniques or other forms of information technology, *e.g.*, permitting electronic submission of responses.

Overview of This Information Collection

Collection Title: Local Union Report (EEO–3).

OMB Number: 3046–0006.

Frequency of Report: Biennial.

Type of Respondent: Referral local unions with 100 or more members.

Description of Affected Public: Referral local unions and independent or unaffiliated referral unions and similar labor organizations.

Responses: 3,000.

Reporting Hours: 3,000 (4,500 hours including recordkeeping).

Number of Forms: 1.

Federal Cost: $43,500.

Abstract: Section 709(c) of Title VII of the Civil Rights Act of 1964, as amended, 42 U.S.C. 2000e–8(c), requires employers, employment agencies, and labor organizations to make and keep records relevant to a determination of whether unlawful employment practices have or are being committed and to make reports therefrom as required by the EEOC. Accordingly, the EEOC has issued regulations which set forth the reporting requirement for various kinds of labor organizations—Referral local unions with 100 or more have been required to submit EEO–3 reports since 1967 (biennially since 1985). The individual reports are confidential.

EEO–3 data are used by the EEOC to investigate charges of discrimination against referral local unions. In addition, the data are used to support EEOC decisions and conciliations, and for research. Pursuant to section 709(d) of Title VII of the Civil Rights Act of 1964, as amended, EEO–3 data are also shared with 86 State and Local Fair Employment Practices Agencies (FEPAs) and other government agencies.

Burden Statement: The respondent burden for this information collection is minimal. The estimated number of respondents included in the annual EEO–3 survey is 3,000 referral local unions. Since each union files one EEO–3 report, the number responses is 3,000. The total biennial reporting burden is estimated to be 3,000 hours, and total biennial reporting and recordkeeping burden is 4,500 hours.

This is an average burden estimate and is based on a long history of reporting experience. The burden is dependent on the size of the referral local union and on the number of referrals made by the union during the reporting period. Smaller unions may well take under an hour to complete the report. Over the years, the Commission has reduced the reporting and record keeping burden by eliminating all local unions with fewer than 100 members, by requiring record keeping for a two month period only, by changing the data collection instrument, and by changing the frequency of the data collection from an annual to a biennial basis. Further reductions, such as filing by diskette or magnetic tape, have been less successful because referral local unions appear less likely to have computerized record keeping and reporting capabilities.

Dated: October 6, 1999.

For the Commission.

Ida L. Castro,

Chairwoman.

[FR Doc. 99–26790 Filed 10–13–99; 8:45 am]

BILLING CODE 6570–01–M

OFFICE OF SCIENCE AND TECHNOLOGY POLICY

Proposed Federal Policy on Research Misconduct To Protect the Integrity of the Research Record

AGENCY: Office of Science and Technology Policy.

ACTION: Request for public comment on proposed Federal policy on research misconduct.

SUMMARY: The Office of Science and Technology Policy (OSTP) proposes a government-wide Federal policy for research misconduct for adoption and implementation by agencies that conduct and support research. The proposed policy addresses behavior that has the potential to affect the integrity of the research record and establishes procedural safeguards for handling allegations of research misconduct. It has been cleared by the National Science and Technology Council (NSTC) and is the result of an extensive interagency development, review, and clearance process initiated in April 1996. This policy notice was developed by OSTP in consultation with the Office of Management and Budget (OMB), and OMB supports the solicitation of comment on the proposed policy and procedures.

The policy consists of a definition of research misconduct and guidelines for handling allegations of research misconduct. Following consideration of public comments received, the agencies will be directed to implement the policy. In some cases, this may require agencies to amend or replace regulations addressing research misconduct that are already in place. In other cases, agencies may implement the policy through administrative mechanisms. An important objective of this policy is to achieve uniformity in research misconduct policies across the agencies of the Federal government. It is intended that agencies will adopt the final Federal research misconduct policy, and therefore potentially affected parties should express their views on the policy in response to this notice.

DATES: The Office of Science and Technology Policy welcomes comments on the proposed policy. To be assured consideration, comments must be postmarked no later than December 13, 1999.

ADDRESSES: Comments should be addressed to Sybil Francis, Office of Science and Technology Policy, Executive Office of the President, Washington, DC 20502.

FOR FURTHER INFORMATION CONTACT: Sybil Francis, Office of Science and Technology Policy, Executive Office of the President, Washington, DC 20502. Tel: 202–456–6040; Fax: 202–456–6027; e-mail: sfrancis@ostp.eop.gov.

SUPPLEMENTARY INFORMATION: Advances in science and engineering depend on the reliability of the research record, as do the benefits associated with them in areas such as health and national security. Sustained public trust in the scientific enterprise also requires confidence in the research record and in the processes involved in its ongoing development.

It is for these reasons, and in the interest of ensuring uniformity in Federal agency policies addressed to behaviors that might affect the integrity of the research record, that the NSTC initiated discussions regarding the development of a government-wide research misconduct policy in April 1996. Since then, the proposed policy has undergone extensive agency review and clearance at a number of levels. The NSTC's Research Integrity Panel (RIP), comprised of representatives from the major research agencies developed the first draft of the policy. It was tasked by the NSTC to propose a definition of research misconduct and to develop guidelines for responding to allegations of research misconduct. The RIP forwarded its report and recommendations to the NSTC Committee on Science in December 1996, which broadened review of the policy to additional agencies, subjecting it to further analysis. The full NSTC approved the proposed policy in May 1999, clearing the way for this notice of proposed policy. The notice was developed by OSTP in consultation with OMB, and OMB supports the solicitation of comment on the proposed policy and procedures.

The proposed policy defines the scope of the Federal government's interest in the accuracy and reliability of the research record and the processes involved in its development. It consists of a definition of research misconduct and establishes basic guidelines for responding to allegations of research misconduct, including procedural safeguards. An important objective of this policy is to achieve uniformity across the Federal agencies in the definition of research misconduct they use and consistency in their processes for responding to allegations of research misconduct. It is expected that the final policy will apply to all research funded by the Federal agencies, including intramural research conducted by the Federal agencies, research conducted or managed by contractors, and research performed at universities. Commentators are invited to express their views on the proposed policy and on the premise that a uniform government-wide policy is a desirable goal.

Following consideration of public comments received, agencies will be directed to implement the policy. In some cases, this may require agencies to amend or replace extant regulations addressing research misconduct. In other cases, agencies may need to put new regulations in place or implement the policy through administrative mechanisms.

The proposed policy addresses behavior subject to administrative action and applies only to research misconduct as defined in the policy. It does not supersede government policies or procedures for addressing other matters, such as the unethical treatment of human research subjects or mistreatment of laboratory animals used in research, nor does it supersede criminal or civil law. It does not limit agency or institutional policies and prerogatives in addressing other forms of misconduct, including those that might occur in the course of conducting research, including the misuse of public funds. Agencies will address these other issues as authorized by law and as appropriate to their missions and objectives.

Proposed Policy

The proposed policy consists of the following:

I. Research Misconduct Defined

Research[1] misconduct is defined as fabrication, falsification, or plagiarism in proposing, performing, or reviewing research, or in reporting research results.

- *Fabrication* is making up results and recording or reporting them.
- *Falsification* is manipulating research materials, equipment, or processes, or changing or omitting data or results such that the research is not accurately represented in the research record.[2]
- *Plagiarism* is the appropriation of another person's ideas, processes, results, or words without giving appropriate credit, including those obtained through confidential review of others' research proposals and manuscripts.
- Research misconduct does not include honest error or honest differences of opinion.

II. Findings of Research Misconduct

A finding of research misconduct requires that:

- There be a significant departure from accepted practices of the scientific community for maintaining the integrity of the research record;
- The misconduct be committed intentionally, or knowingly, or in reckless disregard of accepted practices; and
- The allegation be proven by a preponderance of evidence.

III. Responsibilities of Federal Agencies and Research Institutions[3]

Agencies and research institutions are partners who share responsibility for the integrity of the research process. Federal agencies have ultimate oversight authority for Federally funded research, but research institutions bear primary responsibility for prevention and detection of research misconduct, and for the inquiry, investigation, and adjudication of allegations of research misconduct.

- *Agency Policies and Procedures.* Agency policies and procedures with regard to both their intramural as well as their extramural programs must conform to those outlined in this document.
- *Agency Referral to Research Institution.* In most cases, agencies will rely on the researcher's home institution to respond to allegations of research misconduct.
- Agencies will therefore usually direct allegations of research misconduct made directly to them to the appropriate research institution. A Federal agency may elect not to defer to the research institution if it determines the institution is not prepared to handle the allegation in a manner consistent with the definition of research misconduct and procedures outlined herein; if Federal agency involvement is needed to protect the Federal

[1] Research, as defined herein, includes all basic, applied, and demonstration research in all fields of science, engineering, and mathematics.

[2] The research record is defined as the record of data or results that embody the facts resulting fromscientific inquiry, and includes, for example, laboratory records, both physical and electronic, research proposals, progress reports, abstracts, theses, oral presentations, internal reports, and journal articles.

[3] This includes all organizations receiving Federal research funds, including, for example, colleges and universities, intramural Federal research laboratories, Federally funded research and development centers, national user facilities, industrial laboratories, or other research institutes. Independent researchers and small research institutions are covered by this policy but it is understood that they may not have the institutional structures in place to meet the full range of responsibilities outlined in this policy. Under such circumstances the agency may elect not to defer the investigations to the small research institution or independent researcher.

government's or the public's interest, including the necessity to ensure public health and safety; or if the allegation involves an individual or an entity of sufficiently small size that it cannot reasonably conduct the investigation itself. At any time, the Federal agency may proceed with its own inquiry or investigation.

• *Multiple Phases of the Investigation.* An agency's or research institution's response to an allegation of research misconduct will usually consist of several phases, including an *inquiry* to determine if the allegation has substance and if an investigation is warranted; and an *investigation*, the formal examination and evaluation of the relevant facts leading either to dismissal of the case or a recommendation for a finding of research misconduct. If an investigation results in a recommendation for a finding of misconduct, an adjudication phase follows whereby the recommendations are reviewed and appropriate action determined. The subject of the allegation may also *appeal* a Federal agency finding of research misconduct.

• *Separation of Phases.* Adjudication decisions are separated organizationally from the agency's or research institution's inquiry and investigation processes. Any appeals process should likewise be separated organizationally from the inquiry or investigation.

• *Institutional Notification of the Agency.* When research institutions receive allegations of research misconduct, they will notify the relevant responsible agency (or agencies in some cases) of the allegation upon completion of an inquiry, if (1) the allegation involves Federally funded research (or an application for Federal funding) and meets the Federal definition of research misconduct given above, and (2) there is sufficient evidence to proceed to an investigation. Research institutions will keep the agency informed of the progress of the investigation, its outcome, and any actions taken. Upon completion of the investigation, the research institution will forward to the agency a report of the case and recommendations for its disposition.

• *Other Reasons to Notify the Agency.* At any time during an inquiry or investigation, the institution will notify the Federal agency if public health or safety is at risk; if agency resources or interests are threatened; if research activities should be suspended; if there is reasonable indication of possible violations of civil or criminal law; if Federal action is required to protect the interests of those involved in the investigation; if the research institution believes the inquiry or investigation may be made public prematurely so that appropriate steps can be taken to safeguard evidence and protect the rights of those involved; or if the scientific community or public should be informed.

• *Agency Follow-up to Institutional Action.* The agency will review the findings and any corrective actions taken by the research institution, take additional investigative steps if necessary, and determine what actions may be required to protect the government's interests. Upon completion of its review, the agency will take appropriate administrative action in accordance with applicable laws or regulations. When the agency has made a final determination and has closed a case, it will notify the subject of the allegation and the involved institution of the disposition of the case.

• *When more than one agency is involved.* A lead agency should be designated to coordinate responses to allegations of research misconduct when more than one agency is involved in funding activities relevant to the allegation. In cases where the sanction is less than government-wide suspension or debarment, agencies may implement their own administrative actions in accordance with established agency and contractual procedures.

IV. Guidelines for Fair and Timely Procedures

The following guidelines are provided to assist agencies and research institutions in developing fair and timely procedures for responding to allegations of research misconduct. Implementation of these guidelines should provide safeguards for subjects of allegations as well as for informants. Fair and timely procedures include the following:

• *Safeguards for Informants.* Safeguards for informants give individuals the confidence that they can bring good faith allegations of research misconduct to the attention of appropriate authorities or serve as informants to an investigation without suffering retribution;

• *Safeguards for the Subject of the Allegation.* Safeguards for the subjects of allegations give individuals the confidence that their rights are protected and that the mere filing of an allegation of research misconduct against them will not bring their research to a halt or be the basis for other disciplinary or adverse action absent other compelling reasons. Other safeguards include timely written notification of the subject regarding substantive allegations made against him or her; a description of all such allegations; and the opportunity to respond to allegations and to the evidence and findings upon which they are based.

• *Objectivity and Expertise.* The selection of individuals to review allegations and conduct investigations who have appropriate expertise and have no unresolved conflicts of interests, helps to ensure fairness throughout all phases of the process;

• *Timeliness.* Reasonable time limits for the conduct of the inquiry, investigation, adjudication, and appeal phases, with allowances for extensions where appropriate, provide confidence that the process will be well-managed; and

• *Confidentiality During Inquiry and Investigation.* To the extent possible consistent with a fair investigation and as allowed by law, knowledge about the identity of subjects and informants is limited to those who need to know. Records maintained by the agency during the course of responding to an allegation of research misconduct should be exempt from disclosure under the Freedom of Information Act to the extent permitted by law and regulation.

V. Actions

• *Seriousness of the Misconduct.* In deciding what administrative actions are appropriate, the agency should consider the seriousness of the misconduct, including whether the misconduct was intentional or reckless; was an isolated event or part of a pattern; had significant impact on the research record; and had significant impact on other researchers or institutions.

• *Administrative Actions.* Administrative actions available include, but are not limited to, letters of reprimand; the imposition of special certification or assurance requirements to ensure compliance with applicable regulations or terms of an award; suspension or termination of an active award; or suspension and debarment in accordance with the government-wide rule on nonprocurement suspension and debarment, Subpart 9.4 of the Federal Acquisition Regulation. In the event of suspension or debarment, the information is made publicly available through the List of Parties Excluded from Federal Procurement and Nonprocurement Programs maintained by the U.S. General Services Administration.

• *In Case of Criminal Violations.* If the funding agency believes that criminal violations may have occurred,

the agency should refer the matter to the appropriate criminal investigative body.

Dated: October 5, 1999.

Barbara Ann Ferguson,

Administrative Officer, Office of Science and Technology Policy.

[FR Doc. 99–26608 Filed 10–13–99; 8:45 am]

BILLING CODE 3170–01–P

FEDERAL COMMUNICATIONS COMMISSION

Sunshine Act Meeting: Deletion of Agenda Item From October 8th Meeting

October 8, 1999.

The following items has been deleted from the list of agenda items scheduled for consideration at the October 8, 1999, Open Meeting that were previously listed in the Commission's Notice of October 1, 1999. Items 1 and 4 have been adopted by the Commission.

Item No.	Bureau	Subject
1	Common Carrier	Title: Applications of Ameritech Corporation, Transferor, and SBC Communications, Inc., Transferee, for Consent to Transfer Control of Corporations Holding Commission Licenses and Lines Pursuant to sections 214 and 310(d) of the Communications Act and Parts 5, 22, 24, 25, 63, 90, 95 and 101 of the Commission's Rules (CC Docket No. 98–141). Summary: The Commission will consider a Memorandum Opinion and Order concerning applications for approval to transfer control of licenses and lines.
4	Common Carrier Cable Services Engineering and Technology and Wireless Telecommunications.	Title: Local Competition and Broadband Reporting. Summary: The Commission will consider a Notice of Proposed Rulemaking proposing to collect data about the development of local telephone service competition and the deployment of broadband services from telecommunications carriers and others.

Federal Communications Commission.

Magalie Roman Salas,

Secretary.

[FR Doc. 99–26877 Filed 10–8–99; 4:58 pm]

BILLING CODE 6712–01–M

FEDERAL ELECTION COMMISSION

Sunshine Act Meeting

AGENCY: Federal Election Commission.

PREVIOUSLY ANNOUNCED DATE & TIME: Thursday, September 30, 1999, 10 a.m., meeting open to the public.

The following item was added to the agenda: Coordination Rulemaking.

DATE & TIME: Tuesday, October 19, 1999, 10 a.m.

PLACE: 999 E Street, NW., Washington, D.C.

STATUS: This meeting will be closed to the public.

ITEMS TO BE DISCUSSED:

Compliance matters pursuant to 2 U.S.C. 437g.

Audits conducted pursuant to 2 U.S.C. 437g, 438(b), and Title 26, U.S.C.

Matters concerning participation in civil actions or proceedings or arbitration.

Internal personnel rules and procedures or matters affecting a particular employee.

DATE & TIME: Thursday, October 21, 1999 at 10 a.m.

PLACE: 999 E Street, NW., Washington, DC (ninth floor).

STATUS: This meeting will be open to the public.

ITEMS TO BE DISCUSSED:

Correction and Approval of Minutes.

Advisory Opinion 1999–23: Arkansas Bankers, Inc. PAC by Ken D. Hammonds.

Advisory Opinion 1999–26: Virginia Taxpayers Party by counsel, William J. Olson.

Title 26: Draft Final Rules on Audit Procedures, Primary and General Election ''Bright Line,'' and Vice Presidential Committees.

Coordination Rulemaking (continued from September 30, 1999).

OGC Task Priority Recommendations.

Administrative Matters.

PERSON TO CONTACT FOR INFORMATION: Mr. Ron Harris, Press Officer, Telephone: (202) 694–1220.

Mary W. Dove,

Acting Secretary of the Commission.

[FR Doc. 99–27026 Filed 10–12–99; 3:33 pm]

BILLING CODE 6715–01–M

FEDERAL MARITIME COMMISSION

Notice of Agreement(s) Filed

The Commission hereby gives notice of the filing of the following agreement(s) under the Shipping Act of 1984. Interested parties can review or obtain copies of agreements at the Washington, DC offices of the Commission, 800 North Capitol Street, NW., Room 962. Interested parties may submit comments on an agreement to the Secretary, Federal Maritime Commission, Washington, DC 20573, within 10 days of the date this notice appears in the **Federal Register**.

Agreement No.: 203–011678

Title: Hamburg-Sued/Crowley Cooperative Service Contract Agreement

Parties:

Hamburg-Suedamerikanische Dampfschifffahrts-gesellschaft Eggert & Amsinck

Crowley American Transport, Inc.

Synopsis: Under the proposed agreement, Crowley is assigning its rights under certain service contracts to Hamburg-Sued. Further, the agreement authorizes the parties to jointly negotiate and execute service contracts, and amend their joint contracts. The agreement also contains non-compete provisions that are related to Hamburg-Sued's imminent purchase of certain Crowley assets and services. The parties request expedited review.

Agreement No.: 203–011679

Title: ASF/STC Agreement

Parties:

Cosco Container Lines Ltd.

Evergreen Marine Corporation

Hanjin Shipping Co., Ltd.

Hyundai Merchant Marine Co., Ltd.

Kawasaki Kisen Kaisha, Ltd.

Mitsui O.S.K. Lines, Ltd.

Nippon Yusen Kaisha, Ltd.

Yang Ming Marine Transport Corporation

Synopsis: The proposed cooperative working agreement would authorize the parties to exchange information and to reach non-binding agreement on both general issues and economic trends affecting the industry, the general level of rates and rate trends, and membership in other agreements and associations, all on a worldwide basis.

Dated: October 8, 1999.

By Order of the Federal Maritime Commission.

Bryant L. VanBrakle,

Secretary.

[FR Doc. 99–26796 Filed 10–13–99; 8:45 am]

BILLING CODE 6730–01–P

FEDERAL MARITIME COMMISSION

Ocean Transportation Intermediary License Applicants

Notice is hereby given that the following applicants have filed with the Federal Maritime Commission applications for licenses as Non-Vessel Operating Common Carrier and Ocean Freight Forwarder—Ocean Transportation Intermediaries pursuant to section 19 of the Shipping Act of 1984 as amended (46 U.S.C. app. 1718 and 46 CFR part 515).

Persons knowing of any reason why any of the following applicants should not receive a license are requested to contact the Office of Freight Forwarders, Federal Maritime Commission, Washington, DC 20573.

Non-Vessel-Operating Common Carrier Ocean Transportation Intermediary Applicants:

DSM Freight, Inc., 280 SW 99 Terrace, Pembroke Pines, FL 33025; Officers: Dawn Pierce, President (Qualifying Individual) Leslie Alexander, Vice President (Qualifying Individual)

Lukini Shipping Inc., Cargo Building 80, Room 203, JFK International Airport, Jamaica, NY 11430; Officers: Miriam Y. Chen, Director (Qualifying Individual)

Marine Logistics Management, Inc., 398 Mallard Lane, Weston, FL 33327; Officers: Clifford R. Johnson, Treasurer (Qualifying Individual), John L. Sharko, President

Maxx Express, Inc., 917 S. San Julian Street, Los Angeles, CA 90015; Officer: Sang Ho Kim, President (Qualifying Individual)

Ordis Sea Cargo, Inc., 2204 Landmeier Road, Elk Grove Village, IL 60007; Officers: Rolando T. Nino, Vice President of Operations (Qualifying Individual), Isidoreo T. Santos, Jr., President

Non-Vessel-Operating Common Carrier and Ocean Freight Forwarder Transportation Intermediary Applicants

JDB International Inc., 780 Apex Road, Sarasotal, FL 34240; Officers: Karen L. Ambrosia, President (Qualifying Individual), Richard Glanz, Vice President

Ocean Freight Forwarders—Ocean Transportation Intermediary Applicants

S K Logistics, Inc., 1040 Sandy Ridge Road, Doylestown, PA 18901; Officer: Paul J. McGrath, President (Qualifying Individual)

Dated: October 8, 1999.

Bryant L. VanBrakle,

Secretary.

[FR Doc. 99–26798 Filed 10–13–99; 8:45 am]

BILLING CODE 6730–01–P

FEDERAL MARITIME COMMISSION

[Docket No. 99–18]

Stallion Cargo, Inc.—Possible Violations of Sections 10(a)(1) and 10(b)(1) of the Shipping Act of 1984; Notice of Investigation

Notice is given that the Commission, on October 5, 1999, served an Order of Investigation and Hearing on Stallion Cargo, Inc. (''Stallion''), a tariffed and bonded non-vessel operating common carrier (''NVOCC''). The Order institutes a formal investigation to determine whether Stallion violated sections 10(a)(1) and 10(b)(1) of the Shipping Act of 1984, 46 U.S.C. App. Sections 1709(a)(1) and (b)(1), by knowingly and willfully obtaining transportation at less than the rates and charges otherwise applicable through misdescription of the commodities actually shipped, and charging, demanding, collecting or receiving less or different compensation for the transportation of property than the rates and charges shown in its NVOCC tariff. Should violations be found, the proceeding will determine whether to impose civil penalties, suspend Stallion's tariff, suspend or revoke its license, and issue a cease and desist order. The full text of the Order may be viewed on the Commission's home page at www.fmc.gov, or at the Office of the Secretary, Room 1046, 800 N. Capitol Street, NW, Washington, DC. Any person may file a petition for leave to intervene in accordance with 46 CFR 502.72.

Bryant L. VanBrakle,

Secretary.

[FR Doc. 99–26715 Filed 10–13–99; 8:45 am]

BILLING CODE 6730–01–P

FEDERAL RESERVE SYSTEM

Change in Bank Control Notices; Acquisitions of Shares of Banks or Bank Holding Companies

The notificants listed below have applied under the Change in Bank Control Act (12 U.S.C. 1817(j)) and § 225.41 of the Board's Regulation Y (12 CFR 225.41) to acquire a bank or bank holding company. The factors that are considered in acting on the notices are set forth in paragraph 7 of the Act (12 U.S.C. 1817(j)(7)).

The notices are available for immediate inspection at the Federal Reserve Bank indicated. The notices also will be available for inspection at the offices of the Board of Governors. Interested persons may express their views in writing to the Reserve Bank indicated for that notice or to the offices of the Board of Governors. Comments must be received not later than October 27, 1999.

A. Federal Reserve Bank of Chicago (Philip Jackson, Applications Officer) 230 South LaSalle Street, Chicago, Illinois 60690-1413:

1. Jeffrey Martin Dinklage, Wisner, Nebraska; to acquire additional voting shares of D & H Investments Corporation, Cherokee, Iowa, and thereby indirectly acquire Valley Bank & Trust, Cherokee, Iowa.

Board of Governors of the Federal Reserve System, October 7, 1999.

Robert deV. Frierson,

Associate Secretary of the Board.

[FR Doc. 99–26746 Filed 10–13–99; 8:45 am]

BILLING CODE 6210–01–F

FEDERAL RESERVE SYSTEM

Formations of, Acquisitions by, and Mergers of Bank Holding Companies

The companies listed in this notice have applied to the Board for approval, pursuant to the Bank Holding Company Act of 1956 (12 U.S.C. 1841 *et seq.*) (BHC Act), Regulation Y (12 CFR Part 225), and all other applicable statutes and regulations to become a bank holding company and/or to acquire the assets or the ownership of, control of, or the power to vote shares of a bank or bank holding company and all of the banks and nonbanking companies owned by the bank holding company, including the companies listed below.

The applications listed below, as well as other related filings required by the Board, are available for immediate inspection at the Federal Reserve Bank indicated. The application also will be available for inspection at the offices of the Board of Governors. Interested persons may express their views in writing on the standards enumerated in the BHC Act (12 U.S.C. 1842(c)). If the proposal also involves the acquisition of a nonbanking company, the review also includes whether the acquisition of the nonbanking company complies with the standards in section 4 of the BHC Act

(12 U.S.C. 1843). Unless otherwise noted, nonbanking activities will be conducted throughout the United States.

Unless otherwise noted, comments regarding each of these applications must be received at the Reserve Bank indicated or the offices of the Board of Governors not later than November 5, 1999.

A. Federal Reserve Bank of Chicago (Philip Jackson, Applications Officer) 230 South LaSalle Street, Chicago, Illinois 60690-1413:

1. NorthStar Bancshares, Inc., Estherville, Iowa; to become a bank holding company by acquiring 100 percent of the voting shares of NorthStar Bank, Estherville, Iowa.

B. Federal Reserve Bank of Minneapolis (JoAnne F. Lewellen, Assistant Vice President) 90 Hennepin Avenue, P.O. Box 291, Minneapolis, Minnesota 55480-0291:

1. State Bank of Cokato Employee Stock Ownership Plan and Trust, and State Bank of Cokato Employee Stock Ownership Plan and Trust II, Cokato, Minnesota; to become bank holding companies by collectively acquiring 49.94 percent of the voting shares of Cokato Bancshares, Inc., Cokato, Minnesota, and thereby indirectly acquire State Bank of Cokato, Cokato, Minnesota.

C. Federal Reserve Bank of Kansas City (D. Michael Manies, Assistant Vice President) 925 Grand Avenue, Kansas City, Missouri 64198-0001:

1. Graff Family, Inc., McCook, Nebraska; to become a bank holding company by acquiring 80 percent of the voting shares of McCook National Company, McCook, Nebraska; and thereby indirectly acquire McCook National Bank, McCook, Nebraska.

In connection with this application, Applicant also has applied to acquire through McCook National Company, McCook, Nebraska, an 18.75 percent equity interest in Maplewood Apartments, L.L.C., McCook, Nebraska, and thereby engage in community development activities, pursuant to § 225.28(b)(12)(i) of Regulation Y. McCook National Company has applied to retain this interest.

2. Team Financial, Inc. ESOP; Team Financial, Inc.; and Team Financial Acquisition Subsidiary, Inc., all of Paola, Kansas; to acquire 100 percent of the voting shares of ComBankshares, Inc., Prairie Village, Kansas, and thereby indirectly acquire Community Bank, Chapman, Kansas.

D. Federal Reserve Bank of Dallas (W. Arthur Tribble, Vice President) 2200 North Pearl Street, Dallas, Texas 75201-2272:

1. The Employee Stock Ownership Plan and Trust of First Grayson Bancshares, Inc., Celeste, Texas; to become a bank holding company by acquiring 31 percent of the voting shares of First Grayson Bancshares, Inc., Waco, Texas, and thereby indirectly acquire Security Bank, Whitesboro, Texas.

E. Federal Reserve Bank of San Francisco (Maria Villanueva, Manager of Analytical Support, Consumer Regulation Group) 101 Market Street, San Francisco, California 94105-1579:

1. Pacific Crest Capital, Inc., Agoura Hills, California; to become a bank holding company by acquiring 100 percent of the voting shares of Pacific Crest Bank, Agoura Hills, California.

Board of Governors of the Federal Reserve System, October 7, 1999.

Robert deV. Frierson,

Associate Secretary of the Board.

[FR Doc. 99–26747 Filed 10–13–99; 8:45 am]

BILLING CODE 6210–01–F

FEDERAL RESERVE SYSTEM

Sunshine Act Meeting

AGENCY HOLDING THE MEETING: Board of Governors of the Federal Reserve System.

TIME AND DATE: 11:00 a.m., Monday, October 18, 1999.

PLACE: Marriner S. Eccles Federal Reserve Board Building, 20th and C Streets, NW, Washington, DC 20551.

STATUS: Closed.

MATTERS TO BE CONSIDERED:

1. Personnel actions (appointments, promotions, assignments, reassignments, and salary actions) involving individual Federal Reserve System employees.

2. Any items carried forward from a previously announced meeting.

CONTACT PERSON FOR MORE INFORMATION: Lynn S. Fox, Assistant to the Board; 202–452–3204.

SUPPLEMENTARY INFORMATION: You may call 202–452–3206 beginning at approximately 5 p.m. two business days before the meeting for a recorded announcement of bank and bank holding company applications scheduled for the meeting; or you may contact the Board's Web site at http://www.federalreserve.gov for an electronic announcement that not only lists applications, but also indicates procedural and other information about the meeting.

Dated: October 8, 1999.

Robert deV. Frierson,

Associate Secretary of the Board.

[FR Doc. 99–26878 Filed 10–8–99; 4:55 p.m.]

BILLING CODE 6210–01–P

FEDERAL TRADE COMMISSION

[File No. 982–3107]

Shell Oil Company, et al.; Analysis To Aid Public Comment

AGENCY: Federal Trade Commission.

ACTION: Proposed consent agreement.

SUMMARY: The consent agreement in this matter settles alleged violations of federal law prohibiting unfair or deceptive acts or practices or unfair methods of competition. The attached Analysis to Aid Public Comment describes both the allegations in the draft complaint that accompanies the consent agreement and the terms of the consent order—embodied in the consent agreement—that would settle these allegations.

DATES: Comments must be received on or before December 13, 1999.

ADDRESSES: Comments should be directed to: FTC/Office of the Secretary, Room 159, 600 Pennsylvania, Ave., NW, Washington, DC 20580.

FOR FURTHER INFORMATION CONTACT: C. Lee Peeler or Michael Dershowitz, FTC/S–4002, 600 Pennsylvania, Ave., NW, Washington, DC 20580. (202) 326–3090 or 326–3158.

SUPPLEMENTARY INFORMATION: Pursuant to section 6(f) of the Federal Trade Commission Act, 38 Stat. 721, 15 U.S.C. 46 and section 2.34 of the Commission's Rules of Practice (16 CFR 2.34), notice is hereby given that the above-captioned consent agreement containing a consent order to cease and desist, having been filed with and accepted, subject to final approval, by the Commission, has been placed on the public record for a period of sixty (60) days. The following Analysis to Aid Public Comment describes the terms of the consent agreement, and the allegations in the complaint. An electronic copy of the full text of the consent agreement package can be obtained from the FTC Home Page (for September 15, 1999), on the World Wide Web, at ''http://www.ftc.gov/os/actions97.htm.'' A paper copy can be obtained from the FTC Public Reference Room, Room H–130, 600 Pennsylvania Avenue, NW, Washington, DC 20580, either in person or by calling (202) 326–3627.

Public comment is invited. Comments should be directed to: FTC/Office of the

Secretary, Room 159, 600 Pennsylvania. Ave., NW, Washington, DC 20580. Two paper copies of each comment should be filed, and should be accompanied, if possible, by 3½ inch diskette containing an electronic copy of the comment. Such comments or views will be considered by the Commission and will be available for inspection and copying at its principal office in accordance with section 4.9(b)(6)(ii) of the Commission's Rules of Practice (16 CFR 4.9(b)(6)(ii)).

Analysis of Proposed Consent Order To Aid Public Comment

The Federal Trade Commission has accepted, subject to final approval, an agreement containing a consent order from respondents Shell Oil Company and Shell Chemical Company (collectively, ''Shell'').

The proposed consent order has been placed on the public record for sixty (60) days for reception of comments by interested persons. Comments received during this period will become part of the public record. After sixty (60) days, the Commission will again review the agreement and the comments received and will decide whether it should withdraw from the agreement or make final the agreement's proposed order.

Shell has manufactured, tested, advertised, and sold gasoline additives to its trade customers for inclusion in aftermarket fuel system treatment products that they, in turn, sold to the public. The Commission's proposed complaint alleges that by providing its trade customers with allegedly deceptive advertising and promotional materials, as well as with making allegedly false or misleading representations to them about test data, Shell provided the means and instrumentalities to its trade customers to deceive the public. The Commission's proposed complaint alleges the Shell made unsubstantiated representations that Shell gasoline additives significantly improve engine power and acceleration in motor vehicles generally. The complaint also challenges as unsubstantiated the representations that Shell gasoline additives are superior to other fuel system additives in improving engine power and acceleration. The complaint also challenges as false or misleading Shell's representations that scientific tests prove that Shell gasoline additives (a) significantly improve engine power and acceleration, and (b) are superior to other fuel system treatments in improving engine power and acceleration.

Furthermore, the proposed complaint alleges that in reporting test results to its trade customers in regard to tests Shell conducted on its additives and in regard to tests Shell conducted on its customer's aftermarket fuel additive products which contained Shell's additives, Shell made false or misleading representations that such test results (a) constitute scientific proof that Shell gasoline additives and its customer's products that contain Shell additives, significantly improve engine power and acceleration, and (b) constitute scientific proof that Shell gasoline additives, and its customers products that contain Shell additives, are superior to other fuel system additives in improving engine power and acceleration.

The proposed consent order contains provisions designed to prevent respondents from engaging in similar acts and practices in the future.

Part I of the proposed order prohibits respondents claiming that any of their fuel additive products or ingredients improves power or acceleration, or is superior to other products in this regard, unless the claim is substantiated by competent and reliable scientific evidence. It also requires respondents to have substantiation for any representation concerning the performance, benefits, efficacy, attributes or use of any fuel additive product or ingredient.

Part II of the proposed order prohibits respondents from misrepresenting the existence, contents, validity, results, conclusion, or interpretations of any test, study or research done on any fuel additive product or ingredient.

Part III of the proposed order requires respondents to mail copies of the Commission's complaint and order to each trade customer that purchased the fuel additive product or ingredient involved in this matter.

Part IV of the proposed order requires respondents to maintain copies of all materials relied upon in making any representation covered by this order.

Part V of the proposed order requires respondents to distribute copies of the order to its operating divisions and to various officers, agents and employees of respondents.

Part VI of the proposed order requires respondents to notify the Commission of any changes in corporate structure that might affect compliance with the order.

Part VII of the proposed order requires respondents to file with the Commission one or more reports detailing compliance with the order.

Part VIII of the proposed order is a ''sunset'' provision, dictating that the order will terminate twenty years from the date it is issued or twenty years after a complaint is filed in federal court, by either the United States or the FTC, alleging any violation of the order.

The purpose of this analysis is to facilitate public comment on the proposed order. It is not intended to constitute an official interpretation of the agreement and proposed order or to modify in any way their terms.

By direction of the Commission.

Benjamin I. Berman,

Acting Secretary.

[FR Doc. 99–26843 Filed 10–13–99; 8:45 am]

BILLING CODE 6750–01–M

FEDERAL TRADE COMMISSION

[File No. 981 0030]

Ceridian Corporation; Analysis To Aid Public Comment

AGENCY: Federal Trade Commission.

ACTION: Proposed consent agreement.

SUMMARY: The consent agreement in this matter settles alleged violations of federal law prohibiting unfair or deceptive acts or practices or unfair methods of competition. The attached Analysis to Aid Public Comment describes both the allegations in the draft complaint that accompanies the consent agreement and the terms of the consent order—embodied in the consent agreement—that would settle these allegations.

DATES: Comments must be received on or before December 13, 1999.

ADDRESSES: Comments should be directed to: FTC/Office of the Secretary, Room 159, 600 Pennsylvania Ave., NW, Washington, DC 20580.

FOR FURTHER INFORMATION CONTACT: Michael Moiseyev, FTC/S–2308, 600 Pennsylvania Ave., NW, Washington, DC 20580. (202) 326–2682.

SUPPLEMENTARY INFORMATION: Pursuant to section 6(f) of the Federal Trade Commission Act, 38 Stat. 721, 15 U.S.C. 46 and section 2.34 of the Commission's Rules of Practice (16 CFR 2.34), notice is hereby given that the above-captioned consent agreement containing a consent order to cease and desist, having been filed with and accepted subject to final approval, by the Commission, has been placed on the public record for a period of sixty (60) days. The following Analysis to Aid Public Comment describes the terms of the consent agreement, and the allegations in the complaint. An electronic copy of the full text of the consent agreement package can be obtained from the FTC Home Page (for September 29, 1999), on the World Wide Web, at ''http://www.ftc.gov/os/actions97.htm.'' A paper copy can be obtained from the FTC Public Reference Room, Room H–

130, 600 Pennsylvania Avenue, NW, Washington, DC 20580, either in person or by calling (202) 326–3627.

Public comment is invited. Comments should be directed to: FTC/Office of the Secretary, Room 159, 600 Pennsylvania, Ave., NW, Washington, DC 20580. Two paper copies of each comment should be filed, and should be accompanied, if possible, by a 3½ inch diskette containing an electronic copy of the comment. Such comments or views will be considered by the Commission and will be available for inspection and copying at its principal office in accordance with Section 4.9(b)(6)(ii) of the Commission's Rules of Practice (26 CFR 4.9(b)(6)(ii)).

Analysis of Proposed Consent Order To Aid Public Comment

The Federal Trade Commission (''Commission'') has accepted, subject to public comment, an agreement containing a proposed Consent Order from Ceridian Corporation (''Ceridian''), which is designed to remedy the anticompetitive effects resulting from Ceridian's acquisitions of NTS Corporation and Trendar Corporation. Under the terms of the agreement, Ceridian will grant licenses to providers of truck stop fuel desk automation systems to process transactions originated by Ceridian's fleet cards, and will grant licenses to fleet card issuers to have their cards processed through Ceridian's Trendar fuel desk automation system.

The proposed Consent Order has been placed on the public record for sixty (60) days for reception of comments by interested persons. Comments received during this period will become part of the public record. After sixty (60) days, the Commission will again review the proposed Consent Order and the comments received, and will decide whether it should withdraw from the proposed Consent Order or make final the proposed Order.

Pursuant to an asset exchange agreement executed in January, 1998, Ceridian, through its wholly owned subsidiary Comdata Network, Inc. (''Comdata''), acquired substantially all of the assets of NTS. In March, 1995, Comdata Holdings Corporation, a subsidiary of Ceridian, acquired Trendar Corporation. Because the price of Trendar was below $15 million, it was not reportable under the Hart-Scott-Rodino Antitrust Improvements Act. The proposed Complaint alleges that these two acquisitions violated Section 7 of the Clayton Act, as amended, 15 U.S.C. 18, and Section 5 of the Federal Trade Commission Act, as amended, 15 U.S.C. 45, in the market for the provision of fleet card services to over-the-road trucking companies and the market for truck stop fuel desk automation systems.

Fleet Card Services for Over-the-Road Trucking Companies

The services provided by fleet card issuers are of critical importance to over-the-road trucking companies. Fleet cards physically resemble traditional credit cards in that they are plastic laminated cards with embossed numbers on the front and a magnetic stripe on the back. Fleet cards are similar to traditional credit cards in that they provide a means by which cardholders can make purchases at retail locations that accept the card. Fleet cards issued on behalf of trucking companies provide additional services that go beyond the capabilities of traditional credit cards, allowing trucking companies to control the type, volume and frequency of their drivers' purchases, and capture important information relating to the transactions, such as drivers' odometer readings and vehicle identification numbers. Because of the specialized features of these fleet cards, traditional credit cards and other types of fleet cards are not acceptable substitutes. Comdata is the largest provider of fleet card services to over-the-road trucking companies in the United States. At the time Ceridian acquired NTS, NTS and Comdata were substantial, actual competitors in that market.

Fuel Purchase Desk Automation Systems

Fuel purchase desk automation systems are the means by which most truck stops process fleet card transactions. Fuel purchase desk automation systems used by truck stops can process multiple card issuers' fleet cards with a single device, thereby minimizing the physical space truck stops must allocate to point of sale (''POS'') equipment and the training required for fuel purchase desk attendants. Such systems report transactions data and other information to the fleet card issuer, process the approval or rejections of requested transactions, and interface with fueling pumps. Comdata's fuel purchase desk automation system, Trendar, is the dominant means by which truck stops process fleet card transactions.

Fleet cards and fuel purchase desk automation systems are complementary products, and both products exhibit strong network effects. Demand for a fleet card rises with the number of truck stops that accept the card, which in turn depends on the number of fuel purchase desk automation systems that accept the card. Similarly, demand for a fuel purchase desk automation system rises with the number of fleet cards that can use the system. Effective entry into either market alleged in the complaint would be difficult, time consuming and unlikely to be successful without access to a substantial portion of the other market.

Effects of the Acquisitions

The acquisitions of NTS and Trendar resulted in Comdata's having a dominant position in both the fleet card services market and the fuel purchase desk automation systems market. In addition, the acquisitions raised barriers to entry in both markets, because effective entry into either market now requires Comdata's acquiescence. In the absence of the two acquisitions, Comdata would have had strong incentives to ensure that its fleet card was accepted on as many fuel purchase desk automation systems as possible, and Trendar would have maximized its value by accepting as many fleet cards as possible, and Trendar would have maximized its value by accepting as many fleet cards as possible. With the acquisitions, however, these incentives became skewed: Comdata now must consider the impact on its Trendar system of allowing a competing fuel purchase desk automation system to process its card, and the impact on its fleet card business of allowing a rival fleet card to be processed on the Trendar system.

The market for the provision of fleet card services for over-the-road trucking companies is highly concentrated. Comdata controls the majority of that market and, with its acquisition of NTS, is more than five times larger than its nearest competitor. At the time of its acquisition, NTS was Comdata's closest competitor in the market for fleet card services for over-the-road trucking companies. The market for fuel purchase desk automation systems is also highly concentrated. At the time of its acquisition by Comdata, Trendar was the leading supplier of truck stop fuel purchase desk automation systems in the United States. Trendar remains the nation's leading supplier of truck stop fuel purchase desk automation systems.

Ceridian's acquisitions of NTS and Trendar have given Comdata the power to control new entry into, and expansion by incumbent providers in, both the market for the provision of fleet card services to over-the-road trucking companies and the market for truck stop fuel purchase desk automation systems. By acquiring Trendar, Comdata gained control of the predominant means by

which fleet cards are processed by truck stops. Comdata therefore has the ability to preclude or delay new entry into the fleet card market, and to discipline or disadvantage new entrants or incumbent providers of fleet cards who seek to compete effectively with Comdata, by denying them access to Trendar's POS system or by granting access only on discriminatory terms. The investigation revealed evidence that Comdata has delayed or denied some fleet card competitors access to Trendar and Comdata has increased the fees to other firms for Trendar access. Similarly, by acquiring NTS, Comdata enhanced its control over the means by which over-the-road trucking companies purchase fuel.

In addition, both acquisitions increased the difficulty of entry into the fuel purchase desk automated system market. Comdata can defend Trendar's dominant position in that market by denying new entrants access to the fleet card protocols needed to process Comdata and NTS cards, or by granting access only on discriminatory terms. The investigation revealed evidence that Comdata has sought to impede entry. Given Comdata's dominance in the fleet card market, truck stop operators are unlikely to accept a POS system that cannot process Comdata's fleet cards. Because of the complementary nature of the fleet card and fuel purchase desk automation systems products, a new entrant that is unable to secure access to Comdata's products would have to enter both markets simultaneously. Such entry would be time consuming and costly, and is much less likely to be successful.

The Proposed Consent Order

While litigation with a goal of forcing the divestiture of NTS and Trendar was an alternative considered by the Commission, the proposed Consent Order effectively remedies the competitive effects of the two acquisitions without the delay and expenditure of resources that would be incurred with litigation. The proposed Consent Order requires Ceridian to grant fleet card issuers access to Comdata's Trendar fuel purchase desk automation system, and to grant fuel purchase desk automation systems suppliers the right to process Comdata's fleet cards. While access to the Trendar network and the NTS card could also have been accomplished through divestiture, the Commission concluded that divestiture was not necessary to resolve the competitive concerns raised by the two transactions, in part because numerous firms have indicated that they intend to take advantage of the terms of the proposed Consent Order to enter or expand their presence in the two markets.

In order to remedy the concerns in the fleet card services market, the Consent Order requires Comdata, for a period of three years, to grant a ten-year license to effect transactions on the Trendar system to any company providing, or seeking to provide, fleet card services. The order requires Comdata to refer any requests for such a license to a third-party developer approved by the Commission, that will perform all programming or other services necessary to enable the licensee to process transactions on the Trendar system. Once such programming services are completed by the third-party developer, Comdata is required to promptly disseminate the software to all truck stops on the Trendar network. Comdata is further required to provide licensees with equal access to any upgrades or modifications to the Trendar system, and is prohibited from basing any transaction fees charged to truck stops for processing the Comdata card, as well as access to the Comdata card, on whether such truck stops accept any other firm's fleet cards.

In order to remedy concerns in the fuel purchase desk automation systems market, the Consent Order requires Comdata, for a period of three years, to grant a ten-year license to all incumbent suppliers of fuel purchase desk automation systems, and to the first three new system providers that request a license. The license awarded to new system providers shall be transferable, ensuring that if a better positioned entrant emerges in the future, it will be able to acquire a license.

In order to qualify for a license, new system providers must meet certain established criteria. Under the Consent Order, Comdata is required to promptly provide all licensees with all information or assistance necessary to enable the licensee to effect Comdata card transactions in a manner comparable to the way in which those transactions are processed on the Trendar system. The Order permits Comdata to certify that a licensee's system is capable of processing Comdata card transactions using criteria set forth in the Consent Order, and, if Comdata denies such certification, it must provide a compete enumeration for the reasons for such denial. The Order further requires Comdata to grant licensees complete and equal access to all Comdata card functions, upgrades and new developments. Finally, the Order provides that Comdata may not discriminate against any supplier of fuel purchase desk automation systems by charging transaction fees to truck stops that are based on which fuel purchase desk automation system the truck stop uses.

The Consent Order contains additional provisions that are designed to prevent the flow of confidential information obtained from Comdata's competitors between Comdata's fleet card and fuel purchase desk automation system businesses. Under the Order, Comdata is prohibited from providing any non-public information obtained from fuel purchase desk automation system providers to its Trendar business. Likewise, the Order prohibits Comdata from providing any non-public information obtained from fleet card issuers to its Comdata card business.

In order to ensure Comdata's compliance with the terms of the Order, the Commission is allowed to appoint a trustee to monitor any disputes, claims or controversies arising under the Order. The order specifically permits the monitor-trustee to prepare a report for the Commission relating to any failure by Comdata to certify either a fuel purchase desk automation system or a new fleet card and any failure by the third-party developer to provide programming and certification services to fleet card issuers in a timely manner. The trustee is also permitted, where appropriate, to report to the Commission regarding Ceridian's compliance with the Order.

The purpose of this analysis is to facilitate public comment on the proposed Order, and it is not intended to constitute an official interpretation of the agreement and proposed Order or to modify their terms in any way.

By direction of the Commission.

Benjamin I. Berman,

Acting Secretary.

[FR Doc. 99–26845 Filed 10–13–99; 8:45 am]

BILLING CODE 6750–01–M

FEDERAL TRADE COMMISSION

[File No. 982 3046]

Conopco, Inc; Analysis To Aid Public Comment

AGENCY: Federal Trade Commission.

ACTION: Proposed consent agreement.

SUMMARY: The consent agreement in this matter settles alleged violations of federal law prohibiting unfair or deceptive acts or practices or unfair methods of competition. The attached Analysis to Aid Public Comment describes both the allegations in the draft complaint that accompanies the consent agreement and the terms of the

consent order—embodied in the consent agreement—that would settle these allegations.

DATES: Comments must be received on or before December 13, 1999.

ADDRESSES: Comments should be directed to: FTC/Office of the Secretary, Room 159, 600 Pennsylvania Ave., NW, Washington, DC 20580.

FOR FURTHER INFORMATION CONTACT: Linda Badger, Kerry O'Brien or Matthew Gold, Federal Trade Commission, Western Regional Office, 901 Market St., Suite 570, San Francisco, CA 94103. (415) 356–5270.

SUPPLEMENTARY INFORMATION: Pursuant to section 6(f) of the Federal Trade Commission Act, 38 Stat. 721, 15 U.S.C. 46 and section 2.34 of the Commission's Rules of Practice (16 CFR 2.34), notice is hereby given that the above-captioned consent agreement containing a consent order to cease and desist, having been filed with and accepted, subject to final approval, by the Commission, has been placed on the public record for a period of sixty (60) days. The following Analysis to Aid Public Comment describes the terms of the consent agreement, and the allegations in the complaint. An electronic copy of the full text of the consent agreement package can be obtained from the FTC Home Page (for September 15, 1999), on the World Wide Web, at ''htt;://www.ftc.gov/os/actions97.htm.'' A paper copy can be obtained from the FTC Public Reference Room, Room H–130, 600 Pennsylvania Avenue, NW, Washington, DC 20580, either in person or by calling (202) 326–3627.

Public comment is invited. Comments should be directed to: FTC/Office of the Secretary, Room 159, 600 Pennsylvania Ave., NW, Washington, DC 20580. Two paper copies of each comment should be filed, and should be accompanied, if possible, by a 3½ inch diskette containing an electronic copy of the comment. Such comments or views will be considered by the Commission and will be available for inspection and copying at its principal office in accordance with section 4.9(b)(6)(ii) of the Commission's Rules of Practice (16 CFR 4.9(b)(6)(ii)).

Analysis of Proposed Consent Order To Aid Public Comment

The Federal Trade Commission has accepted an agreement, subject to final approval, to a proposed consent order from Conopco, Inc. (''Conopco''). Through its numerous divisions, such as Unilever Home & Personal Care USA, Conopco manufactures and markets a large line of home and personal care products.

The proposed consent order has been placed on the public record for sixty (60) days for the reception of comments by interested persons. Comments received during this period will become part of the public record. After sixty (60) days, the Commission will again review the agreement and any comments received and will decide whether it should withdraw from the agreement and take other appropriate action or make final the agreement's proposed order.

This matter has focused on Conopco's advertisements for Vaseline Brand Intensive Care Antibacterial Hand Lotion (''VOCAL''). The Commission's complaint challenges claims made in television, print, and product label advertisements. Specifically, the complaint alleges that Conopco lacked substantiation for its claims that VICAL: (1) Stops germs on hands longer than washing alone; (2) Provides continuous protection from germs for hours; and (3) Is effective against disease-causing germs, such as cold and flu viruses. According to the complaint, while VICAL can reduce the number of germs on a user's hands, the degree and duration of germ protection have not been scientifically established. Also, according to the complaint, VICAL has not been proven effective against many disease-causing germs, including cold and flu viruses, which are the cause of the most common diseases suffered by consumers.

The proposed consent order contains provisions designed to remedy the violations charged and to prevent the respondent from engaging in similar acts and practices in the future. Part I of the proposed order would require that Conopco possess and rely upon competent and reliable scientific evidence for any claim that VICAL or any other antimicrobial product: (1) Is as effective as, or is more effective than, washing alone in protecting users against germs; (2) has a continuous effect against germs; (3) has any effect on any specific germ; and (4) treats, cures, alleviates the symptoms of, prevents, or reduces the risk of developing any disease or disorder, such as colds, allergies, influenza, or food-borne illnesses. As set out in Part III of the proposed order, Part I will not apply to any product sold or distributed to consumers by third parties under private labeling agreements with Conopco provided, Conopco does not participate in any manner in the funding, preparation or dissemination of the product's advertising.

Part II of the proposed order contains language permitting Conopco to make drug claims that have been approved by the FDA pursuant to either a new drug application or a tentative final or final standard.

The proposed order requires Conopco to maintain materials relied upon to substantiate claims covered by the order; to provide a copy of the consent agreement to all employees or representatives with duties affecting compliance with the terms of the order; to notify the Commission of any changes in corporate structure that might affect compliance with the order; and to file one or more reports detailing compliance with the order.

The purpose of this analysis is to facilitate public comment on the proposed order, and it is not intended to constitute an official interpretation of the agreement and proposed order, or to modify in any way their terms.

By direction of the Commission.

Benjamin I. Berman,

Acting Secretary.

[FR Doc. 99–26844 Filed 10–13–99; 8:45 am]

BILLING CODE 6750–01–M

DEPARTMENT OF HEALTH AND HUMAN SERVICES

Statement of Organization, Functions and Delegations of Authority; Program Support Center

Part P (Program Support Center) of the Statement of Organization, Functions and Delegations of Authority for the Department of Health and Human Services (HHS), (60 FR 51480, October 2, 1995 as amended most recently at 64 FR 34809, June 29, 1999) is amended to reflect changes in Chapter PA within Part P, Program Support Center (PSC), HHS. The PSC is reorganizing to consolidate and streamline functions within the Office of the Director. The *Office of Management Operations* is being abolished and its functions are being realigned within the *Office of Marketing,* the *Office of Budget and Management* (formerly the *Office of Budget and Finance*), and the *Immediate Office of the Director.*

Program Support Center

Under *Part P, Section P–20, Functions,* change the following:

Under *Chapter PA, Office of the Director (PA),* retitle the *Office of Budget and Finance (PA2)* as the *Office of Budget and Management (PAB).* Add the following new items after item (10): ''(11) Develops, coordinates, and implements policies, standards, and procedures governing the administration of the PSC delegations of authority; (12) Develops, coordinates,

and implements policies, standards, and procedures governing the establishment and maintenance of effective organizational structures and functional alignments within the PSC; (13) Administers the Standard Administrative Code (SAC) system for the PSC; (14) Monitors, evaluates, and controls the preparation of PSC responses and proposed HHS responses to PSC-related OIG reports (including internal reviews, analyses and inspections, and investigations); and (15) Coordinates the implementation of the Government Performance and Results Act within the PSC.''

Under the heading, *Office of Marketing (PAC)* (formerly PA3) add the following new items after item (4): ''(5) Coordinates and implements HHS policies and procedures regarding the Privacy Act of 1974, Freedom of Information Act, and the Paperwork Reduction Act of 1995 for the PSC; and (6) Coordinates the PSC-wide policy and procedures system utilizing the PSC Intranet.''

Delete the title and functional statement for the *Office of Management Operations (PA5)* in its entirety.

Dated: October 1, 1999.

Lynnda M. Regan,

Director, Program Support Center.

[FR Doc. 99–26718 Filed 10–13–99; 8:45 am]

BILLING CODE 4168–17–M

DEPARTMENT OF HEALTH AND HUMAN SERVICES

Centers for Disease Control and Prevention

[30DAY–03–00]

Agency Forms Undergoing Paperwork Reduction Act Review

The Centers for Disease Control and Prevention (CDC) publishes a list of information collection requests under review by the Office of Management and Budget (OMB) in compliance with the Paperwork Reduction Act (44 U.S.C. Chapter 35). To request a copy of these requests, call the CDC Reports Clearance Officer at (404) 639–7090. Send written comments to CDC, Desk Officer; Human Resources and Housing Branch, New Executive Office Building, Room 10235; Washington, DC 20503. Written comments should be received within 30 days of this notice.

Proposed Project

1. An Evaluation of Targeted Health Communication Messages: Folic Acid and Neural Tube Defects—NEW—National Center for Environmental Health (NCEH). The Division of Birth Defects and Pediatric Genetics, National Center for Environmental Health, CDC, launched a national education campaign in January 1999 to increase women's knowledge about neural tube birth defects (NTDs) and the beneficial role folic acid, a B vitamin, plays in the prevention of NTDs. Studies show that a 50 to 70 percent reduction in the risk of neural tube birth defects is possible if all women capable of becoming pregnant consume 400 micrograms of folic acid daily both prior to and during early pregnancy.

CDC and the March of Dimes Birth Defects Foundation developed health communication media messages and educational materials targeted to health care providers, as well as to English and Spanish-speaking women. These media messages and educational materials consist of television and radio public service announcements (PSA), brochures and resource manuals.

Information about women's exposure to media messages and educational materials on folic acid information will be collected and measured to determine whether these exposures influenced the women's knowledge and usage of folic acid. Data will be collected via telephone interviews. The number and frequency of women's exposures to the media messages such as television and radio PSAs will be collected from media channels and compared to information collected from survey data, National Council on Folic Acid organizations and the National Clearinghouse on Folic Acid activities. The total annual burden hours are 534.

Respondents	Number of respondents	Number of responses/respondent	Average burden/response (in hours)
Targeted Market for the Folic Acid Messages	2,000	1	.33

Nancy Cheal,

Acting Associate Director for Policy Planning and Evaluation, Centers for Disease Control and Prevention.

[FR Doc. 99–26786 Filed 10–13–99; 8:45 am]

BILLING CODE 4163–18–P

DEPARTMENT OF HEALTH AND HUMAN SERVICES

Centers for Disease Control and Prevention

Citizens Advisory Committee on Public Health Service Activities and Research at Department of Energy (DOE) Sites: Savannah River Site Health Effects Subcommittee

In accordance with section 10(a)(2) of the Federal Advisory Committee Act (Pub. L. 92–463), the Centers for Disease Control and Prevention (CDC) and the Agency for Toxic Substances and Disease Registry (ATSDR) announce the following meeting.

Name: Citizens Advisory Committee on Public Health Service Activities and Research at DOE Sites: Savannah River Site Health Effects Subcommittee (SRSHES).

Times and Dates: 8:30 a.m.–5 p.m., November 4, 1999. 8:30 a.m.–12 noon, November 5, 1999.

Place: Holiday Inn Oceanfront, One South Forest Beach Drive, Hilton Head, South Carolina 29928, telephone 843/785–5126, fax 843/785–7753.

Status: Open to the public, limited only by the space available. The meeting room accommodates approximately 100 people.

Background: Under a Memorandum of Understanding (MOU) signed in December 1990 with DOE and replaced by an MOU signed in 1996, the Department of Health and Human Services (HHS) was given the responsibility and resources for conducting analytic epidemiologic investigations of residents of communities in the vicinity of DOE facilities, workers at DOE facilities, and other persons potentially exposed to radiation or to potential hazards from non-nuclear energy production use. HHS delegated program responsibility to CDC.

In addition, a memo was signed in October 1990 and renewed in November 1992 between ATSDR and DOE. The MOU delineates the responsibilities and procedures for ATSDR's public health activities at DOE sites required under sections 104, 105, 107, and 120 of the Comprehensive Environmental Response, Compensation, and Liability Act (CERCLA or ''Superfund''). These activities include health consultations and public health assessments at DOE sites listed on, or proposed for, the Superfund National Priorities List and at sites that are the subject of petitions from the public; and other health-related activities such as epidemiologic studies, health surveillance, exposure and disease registries, health education, substance-specific applied research, emergency response, and preparation of toxicological profiles.

Purpose: This subcommittee is charged with providing advice and recommendations to the Director, CDC, and the Administrator, ATSDR, regarding community, American

Indian Tribes, and labor concerns pertaining to CDC's and ATSDR's public health activities and research at this DOE site. The purpose of this meeting is to provide a forum for community, American Indian Tribal, and labor interaction, and serve as a vehicle for communities, American Indian Tribes, and labor to express concerns and provide advice to CDC and ATSDR.

Matters To Be Discussed: Agenda items include presentations on community communications, the Production Workers Medical Monitoring Program, a subcommittee discussion of the consolidated Risk Assessment Corporation dose reconstruction report draft review, a report from the Membership Working Group, and the brief report on the progress of the Evaluation Working Group.

Additional agenda items include presentations from the National Center for Environmental Health (NCEH), the National Institute for Occupational Safety and Health (NIOSH), and ATSDR on updates regarding the progress of current studies.

All agenda items are subject to change as priorities dictate.

Contact Person for Additional Information: Paul G. Renard, Radiation Studies Branch, Division of Environmental Hazards and Health Effects, NCEH, CDC, 4770 Buford Highway, NE, M/S F–35, Atlanta, Georgia 30341–3724, telephone 770–488–7040, fax 770–488–7044.

The Director, Management Analysis and Services Office, has been delegated the authority to sign **Federal Register** notices pertaining to announcements of meetings and other committee management activities, for both CDC and ATSDR.

Dated: October 6, 1999.

Carolyn J. Russell,

Director, Management Analysis and Services Office Centers for Disease Control and Prevention.

[FR Doc. 99–26785 Filed 10–13–99; 8:45 am]

BILLING CODE 4163–18–P

DEPARTMENT OF HEALTH AND HUMAN SERVICES

Administration for Children and Families

Proposed Information Collection Activity; Comment Request Proposed Project

Title: Objective Evaluation Report (OER).

OMB No.: 0980–0144.

Description: OER information is collection to provide the Administration for Native Americans with a final report on each discretionary grant project to meet ANA's legislatively required evaluation of grantee locally-determined grant objectives. This collection also complies with Department of Health and Human Services regulations and policies requiring grantees to submit progress reports and agencies to perform grant oversight.

The information is collected in a narrative format without the use of a government form. Grantees provide self-evaluation information to explain the final status and accomplishments related to each funded, grantee-identified project objective(s). Project objectives are listed on an Objective Work Plan (OWP) which is approved and funded for each grant. An enclosure with every grant award provides instructions on completing and submitting the OER.

Native American Program Specialists use the OER information to perform legislatively required Federal program oversight such as evaluate project and grantee performance, identify project outcomes suitable for use in program evaluation and Government Performance and Results Act (GPRA) analysis, and to identify grantees and projects that require more detailed Federal training and/or technical assistance. OERs are used in ANA competitive grant programs such as Social and Economic Development Strategies (SEDS), Native American Languages Preservation, Environmental Regulatory Enhancement, etc.

The Administration for Native Americans simplified the way OER information is collected. Until June 1999, OERs were transcribed onto a government designed form where every project objective was listed; grantees often worked to fill in space under each objective to accommodate the volume of information they believed was required. Grantees now use their letterhead and present the level of detail they deem appropriate.

Respondents: State, Local or Tribal Government.

ANNUAL BURDEN ESTIMATES

Instrument	Number of respondents	Number of responses per respondent	Average burden hours per response	Total burden hours
Objective Evaluation Report (OER):	250	1	2	500

Estimated Total Annual Burden Hours: 500.

In compliance with the requirements of Section 3506(c)(2)(A) of the Paperwork Reduction Act of 1995, the Administration for Children and Families is soliciting public comment on the specific aspects of the information collection described above. Copies of the proposed collection of information can be obtained and comments may be forwarded by writing to the Administration for Children and Families, Office of Information Services, 370 L'Enfant promenade, SW, Washington, DC 20447, Attn: ACF Reports Clearance Officer. All requests should be identified by the title of the information collection.

The Department specifically requests comments on: (a) Whether the proposed collection of information is necessary for the proper performance of the functions of the agency, including whether the information shall have practical utility; (b) the accuracy of the agency's estimate of the burden of the proposed collection of information; (c) the quality, utility, and clarity of the information to be collected; and (d) ways to minimize the burden of the collection of information on respondents, including through the use of automated collection techniques or other forms of information technology. Consideration will be given to comments and suggestions submitted within 60 days of this publication.

Dated: October 5, 1999.

Bob Sargis,

Acting Reports Clearance Officer.

[FR Doc. 99–26726 Filed 10–12–99; 8:45 am]

BILLING CODE 4184–01–M

DEPARTMENT OF HEALTH AND HUMAN SERVICES

Administration for Children and Families

Proposed Information Collection Activity; Comment Request Proposed Project

Title: Objective Progress Report (OPR).

OMB No.: 0980–0155.

Description: OPR information is collected to provide the Administration for Native Americans with programmatic progress reports on discretionary grant projects to meet ANA's legislatively required evaluation of grantee locally-determined grant objectives. This collection also complies with Department of Health and Human Services regulations and policies requiring grantees to submit progress reports and agencies to perform grant oversight.

The information is collected in a narrative format without the use of a government form. Grantees compose a narrative explaining the status of the funded, grantee-identified project objective(s). Project objectives are listed on an Objective Work Plan (OWP) which is approved and funded for each grant. An enclosure with every grant award provides instructions on completing and submitting the OPR.

Native American Program Specialists use the OPR information to perform legislatively required Federal program oversight such as evaluate project and grantee performance, identify project outcomes suitable for use in program evaluation and Government Performance and Results Act (GPRA) analysis, and to identify grantees and projects that require more detailed Federal training and/or technical assistance. OPRs are used in ANA competitive grant programs such as Social and Economic Development Strategies (SEDS), Native American Languages Preservation, Environmental Regulatory Enhancement, etc.

The Administration for Native Americans simplified the way OPR information is collected. Until June 1999, OPRs were transcribed onto a government designed form where every project objective was listed; grantees often worked to fill in space under each objective to accommodate the volume of information they believed was required. Grantees now use their letterhead and present the level of detail they deem appropriate.

Respondents: State, Local or Tribal Government.

ANNUAL BURDEN ESTIMATES

Instrument	Number of respondents	Number of responses per respondent	Average burden hours per response	Total burden hours
Objective Progress Report (OPR):	300.0	2.0	1.5	900.0

Estimated Total Annual Burden Hours: 900.

In compliance with the requirements of Section 3506(c)(2)(A) of the Paperwork Reduction Act of 1995, the Administration for Children and Families is soliciting public comment on the specific aspects of the information collection described above. Copies of the proposed collection of information can be obtained and comments may be forwarded by writing to the Administration for Children and Families, Office of Information Services, 370 L'Enfant Promenade, SW, Washington, DC 20447, Attn: ACF Reports Clearance Officer. All requests should be identified by the title of the information collection.

The Department specifically requests comments on: (a) Whether the proposed collection of information is necessary for the proper performance of the functions of the agency, including whether the information shall have practical utility; (b) the accuracy of the agency's estimate of the burden of the proposed collection of information; (c) the quality, utility, and clarity of the information to be collected; and (d) ways to minimize the burden of the collection of information on respondents, including through the use of automated collection techniques or other forms of information technology. Consideration will be given to comments and suggestions submitted within 60 days of this publication.

Dated: October 7, 1999.

Bob Sargis,

Acting Reports Clearance Officer.

[FR Doc. 99–26727 Filed 10–13–99; 8:45 am]

BILLING CODE 4184–01–M

DEPARTMENT OF HEALTH AND HUMAN SERVICES

Administration for Children and Families

Proposed Information Collection Activity; Comment Request

Proposed Project

Title: Program Narrative Objective Work Plan (OWP).

OMB No.: 0980–0204.

Description: Program Narrative (OWP) information is collected as part of a competitive, discretionary grant application submitted to the Administration for Native Americans (ANA). Included with the OWP are standard, government-wide Federal assistance application forms (e.g., SF–424, 424A, 424B, Non-Constructions Assurances, and various OMB certifications). The OWP provides information used by legislatively mandated project evaluation panels to compete and rank applications. ANA uses the OWP information to perform legislatively mandated project evaluations supporting the basis for recommendations to award or not award ANA grants. After funding, the OWP is used to reflect funded objectives and to administer and monitor ANA grants.

OWP information presents the grant applicants' locally-determined project objectives and plan to achieve those objectives. Economic development projects may attach a business plan. OWP information is presented as narrative and transcribed onto a government form titled, ''ANA Objective Work Plan''. In the past, ANA used two forms to collect the program narrative; i.e., ''Program Narrative Objective Work Plan'' and ''Program Narrative Approach.'' The new, single form combines the two old forms and eliminates some information items.

Instructions for completing the OWP are provided in the ''Administration for Native Americans Application Packet for Financial Assistance.'' Instructions for compiling a complete application are provided in the packet. The OWP and instruction packet are used in all ANA competitive discretionary grant programs such as Social and Economic Development Strategies (SEDS), Native American Languages Preservation, Environmental Regulatory Enhancement, etc.

Respondents: State, Local or Tribal Government.

ANNUAL BURDEN ESTIMATES

Instrument	Number of respondents	Number of responses per respondent	Average burden hours per response	Total burden hours
Program Narrative Objective Work Plan (OWP):	650	1	28	18,200

Estimated Total Annual Burden Hours: 18,200.

In compliance with the requirements of Section 3506(c)(2)(A) of the Paperwork Reduction Act of 1995, the Administration for Children and Families is soliciting public comment on the specific aspects of the information collection described above. Copies of the proposed collection of information can be obtained and comments may be forwarded by writing to the Administration for Children and Families, Office of Information Services, 370 L'Enfant Promenade, SW, Washington, DC 20447, Attn: ACF Reports Clearance Officer. All requests should be identified by the title of the information collection.

The Department specifically requests comments on: (a) Whether the proposed collection of information is necessary for the proper performance of the functions of the agency, including whether the information shall have practical utility; (b) the accuracy of the agency's estimate of the burden of the proposed collection of information; (c) the quality, utility, and clarity of the information to be collected; and (d) ways to minimize the burden of the collection of information on respondents, including through the use of automated collection techniques or other forms of information technology. Consideration will be given to comments and suggestion submitted within 60 days of this publication.

Dated: October 7, 1999.

Bob Sargis,

Acting Reports Clearance Officer.

[FR Doc. 99–26728 Filed 10–13–99; 8:45 am]

BILLING CODE 4184–01–M

DEPARTMENT OF HEALTH AND HUMAN SERVICES

Food and Drug Administration

[Docket No. 99D–4054]

Draft Guidance for Industry on Intraocular Lens; Availability

AGENCY: Food and Drug Administration, HHS.

ACTION: Notice.

SUMMARY: The Food and Drug Administration (FDA) is announcing the availability of the draft guidance entitled ''Intraocular Lens Guidance Document.'' This draft guidance is not final nor is it in effect at this time. This draft guidance describes preclinical and clinical requirements that may be used in support of investigational device exemptions, premarket approval applications, and product development protocols. This draft guidance describes for industry and FDA reviewers the type of information needed to support investigational and marketing applications for intraocular lenses.

DATES: Written comments concerning this guidance must be received by January 12, 2000.

ADDRESSES: Submit written requests for single copies on a 3.5″ diskette of the draft guidance entitled ''Intraocular Lens Guidance Document'' to the Division of Small Manufacturers Assistance (HFZ–220), Center for Devices and Radiological Health, Food and Drug Administration, 1350 Piccard Dr., Rockville, MD 20850. Send two self-addressed adhesive labels to assist that office in processing your request, or fax your request to 301–443–8818. Written comments concerning this draft guidance must be submitted to the Dockets Management Branch (HFA–305), Food and Drug Administration, 5630 Fishers Lane, rm. 1061, Rockville, MD 20852. Comments should be identified with the docket number found in the brackets in the heading of this document. See the **SUPPLEMENTARY INFORMATION** section for information on electronic access to this draft guidance.

FOR FURTHER INFORMATION CONTACT: Donna R. Lochner, Center for Devices and Radiological Health (HFZ–463), Food and Drug Administration, 9200 Corporate Blvd., Rockville, MD 20850, 301–594–2053.

SUPPLEMENTARY INFORMATION:

I. Background

FDA is announcing the availability of a draft guidance entitled ''Intracular Lens Guidance Document.'' This draft guidance provides detailed information about the type of preclinical testing needed to support both a clinical investigation and marketing applications for new intraocular lenses and modifications to intraocular lenses. This draft guidance also provides the basic principles that should be applied in the conduct of a clinical study for new or modified intraocular lenses. Earlier revisions of this draft guidance have been discussed in numerous forums since April of 1997, and industry, clinicians, and other interested parties have participated. These forums have included at least three Ophthalmic Device Panel meetings at which this draft guidance, or parts of the guidance, have been discussed. These Panel discussions began before 1997, and most recently they occurred in October 1997. Both written and verbal comments have been received and discussed thoroughly in these forums.

Although this draft guidance, to a large extent, describes review elements that have been in existence since almost the inception of FDA's review of intraocular lenses, it has been refined and improved through the interactive discussions with the industry, clinicians, panel members, and other interested parties. FDA has made available to all interested parties a summary of all written comments received, and on each version of the guidance FDA has noted the changes from the previous version. This information is available for this most recent release and for previous revisions. Interested persons may obtain this information through the contact person at the address and phone number given above.

II. Significance of Guidance

This draft guidance document represents the agency's current thinking on submissions for intraocular lenses. It does not create or confer any rights for or on any person and does not operate to bind FDA or the public. An alternative approach may be used if such approach satisfies the requirements of the applicable statute, regulations, or both.

The agency has adopted Good Guidance Practices (GGP's), which set forth the agency's policies and procedures for the development, issuance, and use of guidance documents (62 FR 8961, February 27, 1997). This guidance document is

issued as a Level 1 guidance consistent with GGP's.

III. Electronic Access

In order to receive the ''Intraocular Lens Guidance Document'' via your fax machine, call the CDRH Facts–On–Demand (FOD) system at 800–899–0381 or 301–827–0111 from a touch-tone telephone. At the first voice prompt press 1 to access DSMA Facts, at second voice prompt press 2, and then enter the document number (834) followed by the pound sign (#). Then follow the remaining voice prompts to complete your request.

Persons interested in obtaining a copy of the guidance may also do so using the World Wide Web (WWW). The Center for Devices and Radiological Health (CDRH) maintains an entry on the WWW for easy access to information, including text, graphics, and files that may be downloaded to a personal computer with access to the WWW. Updated on a regular basis, the CDRH Home Page includes the ''Intraocular Lens Guidance Document,'' device safety alerts, **Federal Register** reprints, information on premarket submissions (including lists of approved applications and manufacturers' addresses), small manufacturers' assistance, information on video conferencing and electronic submissions, mammography matters, and other device-oriented information. The CDRH home page may be accessed at ''http://www.fda.gov/cdrh''. The ''Intraocular Lens Guidance Document'' will be available at ''http://www.fda.gov/cdrh/ode/iol-guidance.pds''.

IV. Comments

Interested persons may, on or before January 12, 2000, submit to Dockets Management Branch (address above) written comments regarding this draft guidance. Two copies of any comments are to be submitted, except that individuals may submit one copy. Comments are to be identified with the docket number found in brackets in the heading of this document. The draft guidance and received comments may be seen in the Dockets Management Branch between 9 a.m. and 4 p.m., Monday through Friday.

Dated: September 29, 1999.

Linda S. Kahan,

Deputy Director for Regulations Policy, Center for Devices and Radiological Health.

[FR Doc. 99–26719 Filed 10–13–99; 8:45 am]

BILLING CODE 4160–01–F

DEPARTMENT OF HEALTH AND HUMAN SERVICES

Food and Drug Administration

[Docket No. 99D–4052]

Medical Devices; Draft Guidance for the Preparation of a Premarket Notification Application for Processed Human Dura Mater; Availability

AGENCY: Food and Drug Administration, HHS.

ACTION: Notice.

SUMMARY: The Food and Drug Administration (FDA) is announcing the availability of a draft guidance entitled ''Guidance for the Preparation of a Premarket Notification Application for Processed Human Dura Mater.'' This draft guidance document discusses issues that should be addressed in a premarket notification (510(k)) application submitted to establish the substantial equivalence of a proposed processed human dura mater device to other similar products in commercial distribution. This draft guidance document also provides a brief background on processed human dura mater regulation. It is intended to replace the guidance document ''Guide for 510(k) Review of Processed Human Dura Mater'' dated June 26, 1990. This guidance incorporates recommendations from the October 6, 1997, and April 16, 1998, meetings of the FDA Transmissible Spongiform Encephalopathies Advisory Committee (FDA TSE Advisory Committee), which discussed the manufacture and clinical use of processed human dura mater products.

DATES: Written comments concerning this draft guidance must be submitted by January 12, 2000.

ADDRESSES: See the **SUPPLEMENTARY INFORMATION** section for information on electronic access to the draft guidance. Submit written requests for single copies on a 3.5″ diskette of the draft guidance document entitled ''Guidance for the Preparation of a Premarket Notification Application for Processed Human Dura Mater'' to the Division of Small Manufacturers Assistance (HFZ–220), Center for Devices and Radiological Health, Food and Drug Administration, 1350 Piccard Dr., Rockville, MD 20850. Send two self-addressed adhesive labels to assist that office in processing your request, or fax your request to 301–443–8818.

Submit written comments on the draft guidance to the Dockets Management Branch, (HFA–305), Food and Drug Administration, 5630 Fishers Lane, rm. 1061, Rockville, MD 20852.

FOR FURTHER INFORMATION CONTACT: Charles N. Durfor, Center for Devices and Radiological Health (HFZ–410), Food and Drug Administration, 9200 Corporate Blvd., Rockville, MD 20850, 301–594–3090.

SUPPLEMENTARY INFORMATION:

I. Background

Processed human dura mater was in commercial distribution before the enactment of the 1976 Medical Device Amendments to the Federal Food, Drug, and Cosmetic Act. While a classification recommendation was discussed at the February 2, 1990, meeting of the Neurological Devices Advisory Panel, product classification was not finalized. In March 1997, the World Health Organization (WHO) recommended (based on concerns of Creutzfeldt Jakob Disease (CJD) transmission that processed human dura mater no longer be used, especially in neurosurgery, unless no alternative was available. At the same time, the Japanese Health and Welfare Ministry banned the use of processed human dura mater in brain surgery in Japan.

Because FDA established safeguards and guidelines in 1990 to minimize the possibility of CJD transmission by processed human dura mater implantation, and because there were no confirmed cases of CJD transmission related to the use of processed human dura mater in the United States as of March 1997, FDA did not restrict the distribution of processed human dura mater in the United States. However, the decision was made to hold public meetings of the FDA TSE Advisory Committee to reevaluate the safety of processed human dura mater grafts with respect to surgical use and CJD transmission.

On October 6, 1997, the FDA TSE Advisory Committee met to consider information provided by FDA, industry, CDC, National Institutes of Health (NIH), the neurology medical community, and other internationally recognized experts concerning the clinical benefits and risks of CJD transmission associated with processed human dura mater grafts. At the conclusion of this meeting, the committee recommended unanimously that neurosurgeons should avoid the use of processed human dura mater whenever possible. The committee concluded, however, that the final decision to use processed human dura mater should be left to the discretion of the treating neurosurgeon, as long as the human dura mater is procured and processed following certain safety measures.

To improve the safety of processed human dura mater, and based upon the committee's recommendations, on March 6, 1998, FDA sent letters to providers of processed human dura mater requesting that they implement specific measures that may be beyond their standard operating procedures. On April 16, 1998, FDA presented to the FDA TSE Advisory Committee proposed revisions to the committee recommendations from the October 6, 1997, meeting. These revisions took into consideration the responses from the processed human dura mater suppliers to the FDA letter of March 6, 1998. This guidance was prepared to replace the existing FDA guidance ''Guide for 510(k) Review of Processed Human Dura Mater'' dated June 26, 1990, and to incorporate the recommendations received from the FDA TSE Advisory Committee and the responses from manufacturers.

II. Significance of Guidance

This draft guidance document represents the agency's current thinking on the preparation of a premarket notification for processed human dura mater. It does not create or confer any rights for or on any person and does not operate to bind FDA or the public. An alternative approach may be used if such approach satisfies the applicable statute, regulations, or both.

The agency has adopted Good Guidance Practices (GGP's), which set forth the agency's policies and procedures for the development, issuance, and use of guidance documents (62 FR 8961, February 27, 1997). This draft guidance document is issued as a Level 1 guidance consistent with GGP's. Public comment prior to implementation of this guidance document is not required because the guidance is needed to address a significant public health issue. However, the agency did solicit input from the FDA TSE Advisory Committee and processed human dura mater suppliers provided comments on FDA's approach in response to FDA's March 6, 1998, letter.

III. Electronic Access

In order to receive the ''Guidance for the Preparation of a Premarket Notification Application for Processed Human Dura Mater'' via your fax machine, call the CDRH Facts–On–Demand (FOD) system at 800–899–0381 or 301–827–0111 from a touch tone telephone. At the first voice prompt press 1 to access DSMA Facts, at the second voice prompt press 2, and then enter the document number (054) followed by the pound sign(#). Then follow the remaining voice prompts to complete your request.

Persons interested in obtaining a copy of the draft guidance may also do so using the World Wide Web (WWW). CDRH maintains an entry on the WWW for easy access to information including text, graphics, and files that may be downloaded to a personal computer with access to the web. Updated on a regular basis, the CDRH home page includes ''Guidance for the Preparation of a Premarket Notification Application for Processed Human Dura Mater,'' device safety alerts, **Federal Register** reprints, information on premarket submissions (including lists of approved applications and manufacturers' addresses), small manufacturers' assistance, information on video conferencing and electronic submissions, Mammography Matters, and other device-oriented information. The CDRH home page may be accessed at http://www.fda.gov/cdrh. The ''Guidance for the Preparation of a Premarket Notification Application for Process Human Dura Mater'' will be available at http://www.fda.gov/cdrh/ode/054.pdf.

IV. Comments

Interested persons may submit to the Dockets Management Branch (address above) written comments regarding this draft guidance. Two copies of any comments are to be submitted, except individuals may submit one copy. Comments should be identified with the docket number found in brackets in the heading of this document. A copy of the draft guidance and received comments are available for public examination in the Dockets Management Branch between 9 a.m. and 4 p.m., Monday through Friday.

Dated: September 21, 1999.

Linda S. Kahan,

Deputy Director for Regulations Policy, Center for Devices and Radiological Health.

[FR Doc. 99–26720 Filed 10–13–99; 8:45 am]

BILLING CODE 4160–01–F

DEPARTMENT OF HEALTH AND HUMAN SERVICES

Health Care Financing Administration

[Document Identifier: HCFA–R–0262]

Agency Information Collection Activities: Proposed Collection; Comment Request

AGENCY: Health Care Financing Administration.

In compliance with the requirement of section 3506(c)(2)(A) of the Paperwork Reduction Act of 1995, the Health Care Financing Administration (HCFA), Department of Health and Human Services, is publishing the following summary of proposed collections for public comment. Interested persons are invited to send comments regarding this burden estimate or any other aspect of this collection of information, including any of the following subjects: (1) The necessity and utility of the proposed information collection for the proper performance of the agency's functions; (2) the accuracy of the estimated burden; (3) ways to enhance the quality, utility, and clarity of the information to be collected; and (4) the use of automated collection techniques or other forms of information technology to minimize the information collection burden.

Type of Information Collection Request: Extension of a currently approved collection; *Title of Information Collection:* The Adjusted Community Rate Proposal (ACRP) M+C Plan Benefit Package and Supporting Regulations in 42 CFR 417.401, 422.1–.10, 422.50–.80, 422.100–.132, 422.300–.312, 422.400–.404, and 422.560–.622; *Form No.:* HCFA–R–0262 (OMB #0938–0763); *Use:* The plan year 2000 pilot collection effort will be used to verify that the information collection instrument will produce the data HCFA needs to approve M+C plans in the future. Respondents include any M+C organization that intends to offer an M+C plan in calendar year 2000.

This collection will also allow the Agency to provide a totally automated submission and review capability, replace text with data format, establish a standard set of benefit descriptions/definitions, provide a framework to describe benefits, reduce variation in benefit descriptions, collect benefit information and Medicare Compare data with a single instrument, and eliminate the need to validate Medicare Compare data.; *Frequency:* Annual; *Affected Public:* Business or other for-profit, and Not-for-profit institution.; *Number of Respondents:* 300; *Total Annual Responses:* 300; *Total Annual Hours:* 600.

To obtain copies of the supporting statement and any related forms for the proposed paperwork collections referenced above, access HCFA's Web Site address at http://www.hcfa.gov/regs/prdact95.htm, or E-mail your request, including your address, phone number, OMB number, and HCFA document identifier, to Paperwork@hcfa.gov, or call the Reports Clearance Office on (410) 786–1326. Written comments and

recommendations for the proposed information collections must be mailed within 60 days of this notice directly to the HCFA Paperwork Clearance Officer designated at the following address: HCFA, Office of Information Services, Security and Standards Group, Division of HCFA Enterprise Standards; Attention: Julie Brown, Room N2–15–27, 7500 Security Boulevard, Baltimore, Maryland 21244–1850

Dated: October 5, 1999.

John Parmigiani,

HCFA Reports Clearance Officer, HCFA Office of Information Services, Security and Standards Group, Division of HCFA Enterprise Standards.

[FR Doc. 99–26829 Filed 10–13–99; 8:45 am]

BILLING CODE 4120–03–P

DEPARTMENT OF HEALTH AND HUMAN SERVICES

Health Care Financing Administration

[HCFA–1092–N]

Medicare Program; October 29, 1999, Meeting of the Competitive Pricing Advisory Committee

AGENCY: Health Care Financing Administration (HCFA), HHS.

ACTION: Notice of meeting.

SUMMARY: In accordance with section 10(a) of the Federal Advisory Committee Act, this notice announces a meeting of the Competitive Pricing Advisory Committee (the CPAC) on October 29, 1999. The Balanced Budget Act of 1997 (BBA) requires the Secretary of the Department of Health and Human Services (the Secretary) to establish a demonstration project under which payments to Medicare+Choice organizations in designated areas are determined in accordance with a competitive pricing methodology. The BBA requires the Secretary to create the CPAC to make recommendations on demonstration area designation and appropriate research designs for the project. The CPAC meetings are open to the public.

DATES: The meeting is scheduled to meet on October 29, 1999, from 10 a.m. until 4 p.m., e.d.s.t.

ADDRESSES: The meeting will be held at the Marriott Wardman Park Hotel, 2660 Woodley Road, NW, Washington, DC 20008.

FOR FURTHER INFORMATION CONTACT: Sharon Arnold, Ph.D., Executive Director, Competitive Pricing Advisory Committee, Health Care Financing Administration, 7500 Security Boulevard C4–14–17, Baltimore, Maryland 21244–1850, (410) 786–6451.

SUPPLEMENTARY INFORMATION: Section 4011 of the Balanced Budget Act of 1997 (BBA) (Public Law 105–33), requires the Secretary of the Department of Health and Human Services (the Secretary) to establish a demonstration project under which payments to Medicare+Choice organizations in designated areas are determined in accordance with a competitive pricing methodology. Section 4012(a) of the BBA requires the Secretary to appoint a Competitive Pricing Advisory Committee (the CPAC) to meet periodically and make recommendations to the Secretary concerning the designation of areas for inclusion in the project and appropriate research design for implementing the project. The CPAC has previously met on May 7, 1998, June 24 and 25, 1998, September 23 and 24, 1998, October 28, 1998, January 6, 1999, May 13, 1999, July 22, 1999, and September 16, 1999.

The CPAC consists of 15 individuals who are independent actuaries, experts in competitive pricing and the administration of the Federal Employees Health Benefit Program, and representatives of health plans, insurers, employers, unions, and beneficiaries. The CPAC members are: James Cubbin, Executive Director, General Motors Health Care Initiative; Robert Berenson, M.D., Director, Center for Health Plans and Providers, HCFA; John Bertko, Actuary Principal, Reden & Anders Ltd.; David Durenberger, Vice President, Public Policy Partners; Gary Goldstein, M.D., Samuel Havens, Healthcare Consultant; Margaret Jordan, Healthcare Consultant; Chip Kahn, President, The Health Insurance Association of America; Cleve Killingsworth, President and CEO, Health Alliance Plan; Nancy Kichak, Director, Office of Actuaries, Office of Personnel Management; Len Nichols, Principal Research Associate, The Urban Institute; Robert Reischauer, Senior Fellow, The Brookings Institute; John Rother, Director, Legislation and Public Policy, American Association of Retired Persons; Andrew Stern, President, Service Employees International Union, AFL–CIO; and Jay Wolfson, Director, The Florida Information Center, University of South Florida. The chairperson is James Cubbin and the co-chairperson is Robert Berenson, M.D. In accordance with section 4012(a)(5) of the BBA, the CPAC will terminate on December 31, 2004.

The agenda for the October 29, 1999, meeting will include the following:

- A discussion on the status of the Kansas City and Phoenix Area Advisory Committee activities.
- Reports from the CPAC subcommittees.
- A review of the current implementation schedules.
- A discussion of the evaluation of the competitive pricing demonstration.

Individuals or organizations that wish to make 5-minute oral presentations on the agenda issues should contact the Executive Director, by 12 noon, October 26, 1999, to be scheduled. The number of oral presentations may be limited by the time available. A written copy of the oral remarks should be submitted to the Executive Director, no later than 12 noon, October 27, 1999. Anyone who is not scheduled to speak may submit written comments to the Executive Director, by 12 noon, October 27, 1999.

This meeting is open to the public, but attendance is limited to the space available.

(Section 4012 of the Balanced Budget Act of 1997, Public Law 105–33 (42 U.S.C.1395w–23 note) and section 10(a) of Public Law 92–463 (5 U.S.C. App.2, section 10(a))

(Catalog of Federal Domestic Assistance Program No. 93.773, Medicare—Hospital Insurance; and Program No. 93.774, Medicare—Supplementary Medical Insurance Program)

Dated: October 7, 1999.

Michael M. Hash,

Deputy Administrator, Health Care Financing Administration.

[FR Doc. 99–26751 Filed 10–13–99; 8:45 am]

BILLING CODE 4120–01–P

DEPARTMENT OF HEALTH AND HUMAN SERVICES

Health Care Financing Administration

[HCFA–3023–N]

Medicare Program; Meeting of the Laboratory and Diagnostic Services Panel of the Medicare Coverage Advisory Committee—November 15 and 16, 1999

AGENCY: Health Care Financing Administration (HCFA), HHS.

ACTION: Notice of meeting.

SUMMARY: This notice announces a meeting of the Laboratory and Diagnostic Services Panel (the Panel) of the Medicare Coverage Advisory Committee. The Panel will discuss presentations from interested persons regarding human tumor assay systems. This meeting is open to the public and complies with the Federal Advisory Committee Act (5 U.S.C. App. 2, section 10(a)(1) and (a)(2)).

DATES: *The Meeting:* November 15, 1999 from 8 a.m. to 4 p.m. and on November 16, 1999, from 8 a.m. to 12 noon, E.S.T.

Deadline for Presentation Submissions: November 1, 1999.

Deadline for Submission of Final Comments: November 30, 1999.

ADDRESSES: *The Meeting:* The meeting will be held at the Sheraton Inner Harbor at 300 South Charles Street, Baltimore, MD 21201.

Presentations and Comments: Submit written presentations and comments to Katherine Tillman, Executive Secretary; Office of Clinical Standards and Quality, Health Care Financing Administration, 7500 Security Boulevard, Mail Stop S3–02–01, Baltimore, MD 21244.

FOR FURTHER INFORMATION CONTACT: Katherine Tillman, Executive Secretary, (410) 786–9252.

SUPPLEMENTARY INFORMATION: We have established the Medicare Coverage Advisory Committee (MCAC) to provide advice and recommendations to us about clinical coverage issues. The MCAC is composed of an Executive Committee and six panels, each containing members with expertise in one or more of the following fields: clinical and administrative medicine, biologic and physical sciences, public health administration, health care data and information management and analysis, the economics of health care, medical ethics, and other related professions. Each panel is composed of a chairperson, voting members, a nonvoting consumer representative, and a nonvoting industry representative.

Current Members of the Panel

John H. Ferguson, M.D. (Chairperson); Robert L. Murray, Ph.D.; David N. Sundwall, M.D.; George G. Klee, M.D., Ph.D.; Paul D. Mintz, M.D.; Richard J. Hausner, M.D.; Mary E. Kass, M.D.; E. Conyers O'Bryan, M.D.; Cheryl J. Kraft, M.S.; Neysa R. Simmers, M.B.A.; John J.S. Brooks, M.D.; Paul M. Fischer, M.D.; Kathyrn A. Snow, M.H.A.; James (Rod) Barnes, M.B.A.

Topic of the Meeting

The Panel will discuss presentations from interested persons regarding human tumor assay systems.

Procedure and Agenda

On day 1 of the meeting, the Panel will hear oral presentations from the public for approximately 3 hours and 15 minutes. The Panel may limit the number and duration of oral presentations to the time available. If you wish to make a presentation during one of these sessions, you must submit the following to the Executive Secretary before the Deadline for Presentation Submissions date listed in the **DATES** section of this notice: a brief statement of the general nature of the evidence or arguments you wish to present, the names and addresses of proposed participants, and an estimate of the time required to make the presentation. We will request that you declare at the meeting whether or not you have any financial involvement with manufacturers of any items or services being discussed (or with their competitors).

After the public presentation on Day 1 of the meeting, we will make a presentation to the Panel. After our presentation, the Panel will deliberate openly on the topic. Interested persons may observe the deliberations, but the Panel will not hear further comments during this time except at the request of the chairperson. At the end of the Panel deliberations, the Panel will allow a 30-minute open public session for any attendee to address issues specific to the topic.

Submission of Final Comments

Interested persons not scheduled to make an oral presentation, unable to attend the meeting, or wishing to make further remarks, may submit written comments to the Executive Secretary by the Deadline for Submission of Final Comments in the **DATES** section of this notice.

HCFA Home Page

You may access detailed information regarding the agenda and schedule of presentations on our home page www.hcfa.gov/quality/8b.htm the day after the Deadline for Presentation Submissions in the **DATES** section of this notice.

Authority: 5 U.S.C. App. 2, section 10(a)(1) and (a)(2).

(Catalog of Federal Domestic Assistance Program No. 93.774, Medicare—Supplementary Medical Insurance Program)

Dated: October 6, 1999.

Jeffrey L. Kang,

Director, Office of Clinical Standards and Quality, Health Care Financing Administration.

[FR Doc. 99–26752 Filed 10–13–99; 8:45 am]

BILLING CODE 4120–01–P

DEPARTMENT OF HEALTH AND HUMAN SERVICES

Indian Health Service

Request for Public Comment: 30-Day; Proposed Collection: Indian Health Service Loan Repayment Program

Summary: In compliance with Section 3507(a)(1)(D) of the Paperwork Reduction Act of 1995, for opportunity for public comment on proposed information collection projects, the Indian Health Service (IHS) has submitted to the Office of Management and Budget (OMB) a request to review and approve the information collection listed below. This proposed information collection project was published in the March 30, 1999, **Federal Register** (64 FR 15169) and allowed 60 days for public comment. No public comment was received in response to the notice. The purpose of this notice is to allow 30 days for public comment to be submitted to OMB.

Proposed Collection

Title: 09–17–0014, ''Indian Health Service Loan Repayment Program.'' *Type of Information Collection Request:* Extension of a currently approved collection that expires November 30, 1999. *Form Number:* No reporting forms required. *Need and Use of Information Collection:* The IHS Loan Repayment Program (LRP) identifies health professionals with pre-existing financial obligations for educational expenses that meet program criteria and who are qualified and willing to serve at IHS health care facilities that are often remote. Under the program, eligible health professionals sign a contract under which the IHS agrees to repay part or all of their indebtedness for professional training education. In exchange, the health professionals agree to serve for a specified period of time in IHS health care facilities. Eligible health professionals who wish to apply must submit an application to participate in the program. The application requests personal, demographic and educational training information, including information on the educational loans of the individual for whom repayment is being requested (*i.e.*, date, amount, account number, purpose of each loan, interest rate, the current balance, etc.). The data collected is needed and used to evaluate applicant eligibility, to rank and prioritize applicants by specialty, to assign applicants to IHS health care facilities, to determine payment amounts and schedules for paying the lending institutes, and to provide data and statistics for program management review and analysis. *Affected Public:* Individual and households. *Type of Respondents:* Individuals. Table 1 below provides the following types of data collection instruments, estimated number of respondents, number of responses per respondent, annual number of responses, average burden hour per response, and total annual burden hour.

TABLE 1.—ESTIMATED BURDEN HOURS

Data collection instrument	Estimated number of respondents	Response per respondent	Average burden hours per response *	Total annual burden hrs.
Section I	350	1	0.25 (15 min.)	87.5
Section II	350	1	0.50 (30 min.)	175.0
Section III	350	4	0.25 (15 min)	350.0
Contract	350	1	0.33 (20 min)	116.0
Affidavit	350	1	0.17 (min)	58.5
Lender's Certificate	1,400		0.25	350.0
Total	1,750			1,137

* For ease of understanding, burden hours are also provided in actual minutes.

There are no capital costs, operating costs and/or maintenance costs to report.

Request for Comments

Your written comments and/or suggestions are invited on one or more of the following points: (a) Whether the information collection activity is necessary to carry out an agency function; (b) whether the IHS processes the information collected in a useful and timely fashion; (c) the accuracy of the public burden estimate (the estimated amount of time needed for individual respondents to provide the requested information); (d) whether the methodology and assumptions used to determine the estimate are logical; (e) ways to enhance the quality, utility, and clarity of the information being collected; and (f) ways to minimize the public burden through the use of automated, electronic, mechanical, or other technological collection techniques or other forms of information technology.

Direct Comments to OMB

Send your written comments and suggestions regarding the proposed information collection contained in this notice, especially regarding the estimated public burden and associated response time, to: Office of Management and Budget, Office of Regulatory Affairs, New Executive Office Building, Room 10235, Washington, DC 20503, Attention: Desk Officer for IHS.

To request more information on the proposed collection or to obtain a copy of the data collection instrument(s) and/or instruction(s), contact: Mr. Lance Hodahkwen, Sr., M.P.H., IHS Reports Clearance Officer, 12300 Twinbrook Parkway, Suite 450, Rockville, MD 20852–1601, or call non-toll free (301) and return address to: lhodahkw@hqe.ihs.gov.

Comment Due Date: Comments regarding this information collection are best assured of having their full effect if received on or before November 15, 1999.

Dated: October 7, 1999.

Michael H. Trujillo,

Assistant Surgeon General, Director.

[FR Doc. 99–26805 Filed 10–13–99; 8:45 am]

BILLING CODE 4160–16–M

DEPARTMENT OF HEALTH AND HUMAN SERVICES

Office of Inspector General

Program Exclusions: September 1999

AGENCY: Office of Inspector General, HHS.

ACTION: Notice of program exclusions.

During the month of September 1999, the HHS Office of Inspector General imposed exclusions in the cases set forth below. When an exclusion is imposed, no program payment is made to anyone for any items or services (other than an emergency item or service not provided in a hospital emergency room) furnished, ordered or prescribed by an excluded party under the Medicare, Medicaid, and all Federal Health Care programs. In addition, no program payment is made to any business or facility, *e.g.*, a hospital, that submits bills for payment for items or services provided by an excluded party. Program beneficiaries remain free to decide for themselves whether they will continue to use the services of an excluded party even though no program payments will be made for items and services provided by that excluded party. The exclusions have national effect and also apply to all Executive Branch procurement and non-procurement programs and activities.

Subject; city, state	Effective date
PROGRAM-RELATED CONVICTIONS	
A–1 TRANSPORTATION SERVICES; MILWAUKEE, WI	10/20/1999
ACANOVSKI, MARY; NEW YORK, NY	10/20/1999
ACANOVSKI, NEGAT; NEW YORK, NY	10/20/1999
AGUILAR, JAIME; NEW YORK, NY	10/20/1999
AGUILAR, CARLOS; NEW YORK, NY	10/20/1999
AGUILAR PHARMACY; NEW YORK, NY	10/20/1999
ARBORWAY MANOR, INC; HYDE PARK, MA	10/20/1999
BENITEZ, PEDRO R; KEY BISCAYNE, FL	10/20/1999
CANTOR, LEON; BOCA RATON, NY	10/20/1999
CESTARI, ROBERT; ROCKVILLE CENTRE, NY	10/20/1999
COHEN, EDWIN CHARLES; PHOENIX, AZ	10/20/1999
COSTA, NORA MARIA; MIAMI, FL	10/20/1999
CULVER, DIANA A; BONITA SPRINGS, FL	10/20/1999
CUNI, EDUARDO MIGUEL; MIAMI, FL	10/20/1999
D'ANTIGNAC, CHARLOTTE; W LONG BRANCH, NJ	10/20/1999
DEPIETRO, THOMAS J; SCRANTON, PA	10/20/1999
EMERY RETIREMENT & CONVALESCENT; HYDE PARK, MA	10/20/1999
ETTINGER, MARTIN; BOYNTON BEACH, FL	10/20/1999
FLORES, CAROLINE HAGGARD; BRYAND, TX	10/20/1999
HOBGOOD, LAURA; NEW YORK, NY	10/20/1999
HY, SETHA; LONG BEACH, CA	10/20/1999
JACKSON, FRANK D; ROXBURY, MA	10/20/1999
JACKSON, MARGO VALERIE; COLORADO SPRNGS, CO	10/20/1999
JACOBS, ELLYN; OVERLAND PARK, KS	10/20/1999
KENSINGER, JACK W; MIAMI BEACH, FL	10/20/1999
KRONE, JACKI NADOHL; TAMPA, FL	10/20/1999
LAU, DORIS MARIA; ANCHORAGE, AK	10/20/1999
LEIMKUHLER, NIKKI LYNN; PUEBLO, CO	10/20/1999

Subject; city, state	Effective date
LENT, LAWRENCE; VERSAILLES, MO	10/20/1999
LIPSEY, PHILLIP C; OXFORD, WI	10/20/1999
MAHER, MARK A; HYDE PARK, MA	10/20/1999
MOHEBBAN, FARHAD; ROSLYN, NY	10/20/1999
MULLEN, JOHN; MANCHESTER, NH	10/20/1999
NECESSARY, GILBERT; POUND, VA	10/20/1999
OLIVA, JESUS A; MIAMI, FL	10/20/1999
PARROT, CHARLES M; NEW LONDON, CT	10/20/1999
PARZIALE, JEFFREY; TUCSON, AZ	05/21/1999
PERRY, NATHANIEL; WAUPAN, WI	10/20/1999
PITTS, JOHN F; SCRANTON, PA	10/20/1999
RAINEY, ALICE BOSLEY; WALLS, MS	10/20/1999
RICCA, FRANCIS MARTIN; NEW YORK, NY	10/20/1999
ROARK, DENNIS EDWARD; JARRATT, VA	10/20/1999
ROKHSAR, BENJAMIN; FOREST HILLS, NY	10/20/1999
SMITH, CHARLIE FRANK JR; GRAY, TN	10/20/1999
STERLING, LATONYA; BATON ROUGE, LA	10/20/1999
STUART, DENNIS C; BUFFALO, NY	10/20/1999
TRIANA, NICHOLAS J; BRUNSWICK, OH	10/20/1999
VIZCON, LOURDES; MONTICELLO, FL	10/20/1999
WHITENER, BETTY LOU; OAK RIDGE, LA	10/20/1999
WHITNEY, CHARLES LESLIE II; ORANGE, CA	10/20/1999

FELONY CONVICTION FOR HEALTH CARE FRAUD

Subject; city, state	Effective date
KECK, ERIC C; FORT DIX, NJ	10/20/1999
MAFDALI, DAVID; N MIAMI BEACH, FL	10/20/1999
MORANO, RALPH; MONTGOMERY, PA	10/20/1999
WOOD, JAMES DEREK; GLENSIDE, PA	10/20/1999

FELONY CONTROL SUBSTANCE CONVICTION

Subject; city, state	Effective date
ABRAMSON, DOROTHY V; YORK, PA	10/20/1999

PATIENT ABUSE/NEGLECT CONVICTIONS

Subject; city, state	Effective date
ARRUDA, STACY H; DERRY, NH	10/20/1999
BUFFINGTON, MICHAEL L; NORTHRIDGE, CA	10/20/1999
COLLINS, PANDORA; JACKSON, MS	10/20/1999
DEMERSE, JAN EDMUND; AMSTERDAM, NY	10/20/1999
ELLIS, TERESA D; NEWBERRY, SC	10/20/1999
FLEISCHMAN, EDWARD; MOUNT HOLLY, NJ	10/20/1999
FOSTER, LYNETTE; CLEVELAND, OH	10/20/1999
GARCIA, MARTHA; CLEVELAND, OH	10/20/1999
GARCIA, PEDRO NANEZ; PLAINVIEW, TX	10/20/1999
HALPRIN, ARTHUR HENRY; WHEAT RIDGE, CO	10/20/1999
HICKS, SANDRA; CORPUS CHRISTI, TX	10/20/1999
JACKSON, ELIZABETH D; ANDERSON, SC	10/20/1999
KEHOE, MAUREEN T; BEREA, OH	10/20/1999
O'BRIEN, LINDSAY MARIE; LEAVENWORTH, WA	10/20/1999
OKUWOBI, ANTHONIA A; PAWTUCKET, RI	10/20/1999
PHILLIPS, KAREN DENISE; BATON ROUGE, LA	10/20/1999
PORTZ, MYRIAM; DACONO, CO	10/20/1999
RIGGINS, REESE; LITTLETON, CO	10/20/1999
RINEY, DEBORAH A; LITTLE ROCK, AR	10/20/1999
VINET, EMILIE VALDARY; NEW ORLEANS, LA	10/20/1999
WALKER, ANNETTE; SHREVEPORT, LA	10/20/1999
WHARMBY, SHARON L; CANTON, OH	10/20/1999
WHARTON, LAURA CHRISTINE; ROMANCE, AR	10/20/1999

CONVICTION FOR HEALTH CARE FRAUD

Subject; city, state	Effective date
HARPER, PATRICIA JANICE; ASHEVILLE, NC	10/20/1999
LEE, DONNIA; ROCHESTER, NY	10/20/1999

LICENSE REVOCATION/SUSPENSION/SURRENDERED

Subject; city, state	Effective date
ALFONSO, BONITA K; TRAVERSE CITY, MI	10/20/1999
BARRY, LISA R NIEBLING; VALLEY STREAM, NY	10/20/1999
BENNEDY, EDWARD R; CORTLAND, NY	10/20/1999
BERARD, ROBERT ROLAND; SANTA CRUZ, CA	10/20/1999
BOLDEN, JAMES D; FAIRBANKS, AK	10/20/1999
BOSBONIS, MICHAEL PATRICK; IRVINE, CA	10/20/1999
BROUGHMAN, JOHN WILLIAM; FAIRFAX, VA	10/20/1999
BUTTI, THOMAS A; ATTICA, NY	10/20/1999
CARROLL-WALSH, ROBIN L; YPSILANTI, MI	10/20/1999
CARTER, DESWEDA R; COLORADO SPNGS, CO	10/20/1999
CHRISTOPHER, PAMELA CATES; ROANOKE, VA	10/20/1999
CLARK, CHAFFONDA; WOONSOCKET, RI	10/20/1999
COLMAN, VICTORIA LEE; MANCHESTER, NH	10/20/1999
CORDONE, DIANE; NORWALK, CT	10/20/1999
CRAIG, CAROL ELAINE; BERKELEY, CA	10/20/1999
CRANE, DONALD P; JOLIET, IL	10/20/1999
CUDWORTH, GEOFFREY; W HARTFORD, CT	10/20/1999
DAEM, SUSAN DOTSON; TEMPLETON, CA	10/20/1999
DAIGLE, EDMOND L; DOVER, NH	10/20/1999
DARBY, RICARDO LEE; SAN BERNARDINO, CA	10/20/1999
DARNELL, TYLER J; ANCHORAGE, AK	10/20/1999
DELANEY, DARRELL GENE; VIDOR, TX	10/20/1999
DESHAZO, BARRY MARTINEZ; VIRGINIA BEACH, VA	10/20/1999
DOUZE, JOSEPH; GREEN ACRES, FL	10/20/1999
EMIGH, KELLY L; TYRONE, PA	10/20/1999
FALCONER, LYNNE; CAMP VERDE, AZ	10/20/1999
FLYNN, BRIAN P; MANCHESTER, NH	10/20/1999
FOSTER, RICHARD; WETHERSFIELD, CT	10/20/1999
FREDERICK, GAIL; GREENWICH, CT	10/20/1999
GARBISO, CHRISTOPHER ALAN; LOMPOC, CA	10/20/1999
GEBICKI, SUZANNE C; LIGONIER, PA	10/20/1999
GOMEZ, LINDA MARIE; WICHITA FALLS, TX	10/20/1999
GONZALEZ, GLORIA; FORT COLLINS, CO	10/20/1999
GORDON, YOLANDA C; WASHINGTON, DC	10/20/1999
GRAY, PETER J; DOVER, NH	10/20/1999
GRAY, DANA SUE; RIVERSIDE, CA	10/20/1999
GRIMES, VICKI L; CRESTED BUTTE, CO	10/20/1999
GUPTA, RAMESH K; TROY, MI	10/20/1999
HALL, CATHALEN; RICHARDS, TX	10/20/1999
HALL, TERRI MICHELLE; OXNARD, CA	10/20/1999
HAMPTON, ROBYN B; RICHMOND, VA	10/20/1999
HARKINS, JILL; BRIDGEPORT, CT	10/20/1999
HARRINGTON, PENNY MERROW; BENNINGTON, VT	10/20/1999
HASAN, ISA; NORTHVILLE, MI	10/20/1999
HASSELL, MARCUS; FORESTVILLE, CT	10/20/1999
HEIDEL, JERRY L; MIDLOTHIAN, VA	10/20/1999
HENSON, TERRY ARLENE; LUMERTON, TX	10/20/1999
HOFFMAN, LINDA; CARRINGTON, ND	10/20/1999
HUSTON, EDWARD E; FREMONT, CA	10/20/1999

Subject; city, state	Effective date
HYLAND, HILDA SARA; WHITTIER, CA	10/20/1999
JOHNSON, WARREN F; BORGER, TX	10/20/1999
JONES, SHIRLEY K; DENVER, CO	10/20/1999
JURATOVAC, DIANE M; DETROIT, MI	10/20/1999
KELLY, SHERRI E; ROANOKE, VA	10/20/1999
KENOLY, EDWARD L; DENVER, CO	10/20/1999
KIENER, KARL JAY; GEARY, OK	10/20/1999
KLAT, SUSAN VIOLA; FT WORTH, TX	10/20/1999
KUSTER, DAVID E; MARQUETTE, MI	10/20/1999
LABAYEN, ROBERTO F; ARGENTINA, CA	10/20/1999
LANDRUM, TERI ANN; TEMECULA, CA	10/20/1999
LANGLEY, ANDREA LEE; CARMICHAEL, CA	10/20/1999
LEWIS, RAYFIELD; HACIENDA HGTS, CA	10/20/1999
LLOYD, ZACHARY BOYCE; BRONX, NY	10/20/1999
LOVVORN, JOHN R; COUPEVILLE, WA	10/20/1999
LYNCH, LINDA M; ROANOKE, VA	10/20/1999
MAGOLES, MICHAEL STUART; SAN JOSE, CA	10/20/1999
MARASA, ERNEST FRED; GENESEO, NY	10/20/1999
MARTIN, TERESA A; GREELEY, CO	10/20/1999
MATTHEWS, JESSE JR; WATERBURY, CT	10/20/1999
MEAD, MICHELE D; WATERLOO, NY	10/20/1999
METZGER, JAMES ALAN JR; TROY, NY	10/20/1999
MONDRAGON, DIANE; LEDYARD, CT	10/20/1999
MONTGOMERY, DOUGLAS W; YPSILANTI, MI	10/20/1999
MOORE, THOMAS W; BROOKLYN, NY	10/20/1999
MUNGER, LORRAINE; NIANTIC, CT	10/20/1999
NUNEZ, MANUEL ANTONIO; WITTIER, CA	10/20/1999
NUTALL, INGRID CHARMEL; BRYAN, TX	10/20/1999
OLINGER, ANGELA DAWSON; DUBLIN, VA	10/20/1999
ORAFIDIYA, ABAYOMI; NEW CITY, NY	10/20/1999
ORR, TRACY W; KALKASKA, MI	10/20/1999
OSMAN, M FAROUK; INDIO, CA	10/20/1999
PACIFICO, ANNE J; ELWOOD, NY	10/20/1999
PEACOCK, STEPHEN RICHARD; GROTON, NY	10/20/1999
PENNINGTON, JOHN M; PALMETTO, FL	10/20/1999
POWELL, CAROL GROCH; BROOKHAVEN, PA	10/20/1999
PULLEM, ROOSEVELT; ALTADENA, CA	10/20/1999
PURYEAR, CHARLENE C; TRENTON, MI	10/20/1999
REIMER, ROBERT TIMOTHY; WALNUT CREEK, CA	10/20/1999
ROBLES, JANIA E; DENVER, CO	10/20/1999
RODRIGUEZ, JEANNE MARIE; SUNDOWN, TX	10/20/1999
ROSEN, BURTON; NARBETH, PA	10/20/1999
ROSS, ALESIA A; NEWPORT, RI	10/20/1999
ROTH, MICHAEL SCOTT; SYOSSET, NY	10/20/1999
ROUNDS, KELLY M; BRATTLEBORO, VT	10/20/1999
SCOTT, ANITA JO; BRANDYWINE, WV	10/20/1999
SHIRLEY, ANGELA LEIGH; BAYTOWN, TX	10/20/1999
SIDHU, KATHLEEN PARKIN-PAUL; IONIA, MI	10/20/1999
SIGNOR, MITZI G; FORT VALLEY, VA	10/20/1999
SIMSEN, DONALD A; MONMOUTH JUNCTION, NJ	10/20/1999
SMITH, DAVID RALPH; MODESTO, CA	10/20/1999
SOUZA, SHIRLEY A; LOWELL, MA	10/20/1999
SPEIGINER, AUDREY J; PERRIS, CA	10/20/1999
STEIG, HENRY S; FRANKLIN LAKES, NJ	10/20/1999
STONE, JENNIFER L; CEDAR BLUFF, VA	10/20/1999
TAKACH, PATRICIA; MONROE, CT	10/20/1999
TAPERT, RICHARD E; MOUNT CLEMENS, MI	10/20/1999
UNDERWOOD, ARMITA H TILGNER; GRAND PRAIRIE, TX	10/20/1999
VODAK, TONI DANETTE; OAKVIEW, CA	10/20/1999
WHITE, KERRIN L; BRIGHTON, MA	10/20/1999
WILEY, KIMBERLEE ANN; CHICO, CA	10/20/1999
WILSON, ROBERT L; FRANKFORT, IL	10/20/1999
WISELEY, BRUCE VIVIER; BATAVIA, NY	10/20/1999
ZEIGERMAN, AMELIA; POUGHQUAG, NY	10/20/1999
FEDERAL/STATE EXCLUSION/SUSPENSION	
BARASH, MILTON; ABERDEEN, NJ	10/20/1999
CHAND, SANTOSH; FAIRVIEW HGTS, IL	10/20/1999
KHAN, AZAM; NEWARK, NY	10/20/1999
M & G LIVERY & TRANSPORTATION; MOUNTAINSIDE, NJ	10/20/1999
ROZOVSKY, ITAI; CHERRY HILL, NJ	10/20/1999
SVERDLOV, GREGORY; MOUNTAINSIDE, NJ	10/20/1999
FRAUD/KICKBACKS	
LOUIS, ABBOTT A; MONTICELLO, IN	03/01/1999
POBRE, SILVESTRA; PEKIN, IL	06/17/1999
OWNED/CONTROLLED BY CONVICTED/EXCLUDED	
ARTISTIC HOME HEALTH CARE; ST LOUIS, MO	10/20/1999
DOCTOR'S CARE, INC; MIAMI BEACH, FL	10/20/1999
DR MOORE DENTAL OFFICE; DETROIT, MI	10/20/1999
GALAXY MEDICAL & DIAGNOSTIC; EGLIN AFB, FL	10/20/1999
INTERVENTIONS, INC; TAMPA, FL	10/20/1999
LOS DOCTORES MEDICAL & DIAGNOSTIC; EGLIN AFB, FL	10/20/1999
NATURAL HEALTH RESOURCES; BLAINE, MN	10/20/1999
PHYSICAL THERAPY & REHAB; FT WALTON BEACH, FL	10/20/1999
PRICE MEDICAL TRANSPORTATION; BRYAN, TX	10/20/1999
PROFESSIONAL CHIROPRACTIC CTR; KINGSFORD, MI	10/20/1999
RAYMOND NEWSOME, D C; DE SOTO, TX	10/20/1999
SUPER-MED CARE MEDICAL & DIAGN; EGLIN AFB, FL	10/20/1999
TREATMENT DIMENSIONS, INC; TAMPA, FL	10/20/1999
VILAS MEDICAL & DIAGNOSTIC CTR; EGLIN AFB, FL	10/20/1999
YOUTH ENHANCEMENT SERVICES; BEAUMONT, TX	10/20/1999
DEFAULT ON HEAL LOAN	
ANN, GRACE Y; DES PLAINES, IL	10/20/1999
BEHRMAN, GLENN D; LAKE ALFRED, FL	10/20/1999
BERRY, RUSH H; GALESBURG, IL	10/20/1999
BISSANTI, MICHAEL A; QUINCY, MA	10/20/1999
BLITMAN, FAITH M; PHILADELPHIA, PA	10/20/1999
BONDURANT, TERESA M; YELLOW SPRINGS, OH	10/20/1999
BROWN, SHERYL D; JAMESTOWN, NY	10/20/1999
BRUNTON, THOMAS A; THREE LAKES, WI	10/20/1999
BRYANT, JOHN W; ALEXANDRIA, VA	10/20/1999
BUTLER, EDDIE J; SOUTHFIELD, MI	10/20/1999
CALLENDER, RALPH A; EUREKA, CA	10/20/1999
CAMP, CLARENCE L JR; DETROIT, MI	10/20/1999

Subject; city, state	Effective date
CAMPBELL, STEVEN P; SAN FRANCISCO, CA	10/20/1999
COLLINS, ROBERT D; INDIANAPOLIS, IN	10/20/1999
COPELAND, JAMES H; HARRISMAN, TN	10/20/1999
COTHRAN, LONNIE A; POTEAU, OK	10/20/1999
ELACHI, MOHAMED N; PATERSON, NJ	10/20/1999
ESSMAN, RICK A; ASHEVILLE, NC	10/20/1999
GALLEBERG, DAVID A; WYOMING, MN	10/20/1999
GOLDSTEIN, BRAD M; BOCA RATON, FL	10/20/1999
GOLDSTEIN, MARK S; CENTREVILLE, VA	10/20/1999
HAMPTON, JUBAL; LONG BEACH, CA	10/20/1999
HAWKINS, DAVID E; SANDY, UT	10/20/1999
HENRY, DAVID A JR; GALVESTON, TX	10/20/1999
JETT, SIGURD A; FAIRFIELD, CA	10/20/1999
JOHNSON, MARGIE N; MILWAUKEE, WI	10/20/1999
KRAUSE, MARYCATHERINE L; RIVERSIDE, CT	10/20/1999
LAGONEGRO, ANN L; GLOUCESTER, VA	10/20/1999
LAWTON, MICHAEL D; ANAHEIM, CA	10/20/1999
LEVINSON, SCOTT F; CHICAGO, IL	10/20/1999
LIEB, RONEN FOREST HILLS, NY;	10/20/1999
MAKRIDAKIS, NIKOLAOS N; FORT WAYNE, IN	10/20/1999
MARTIN, SUSAN L; CHICAGO, IL	10/20/1999
MARTS, RICHARD A; LOS ANGELES, CA	10/20/1999
MERCADO, RAFAEL L; SAN ANTONIO, TX	10/20/1999
MITNOWSKY, ELLEN J; ASHFIELD, MA	10/20/1999
MOORE-EVANS, JACQUELINE D; HOUSTON, TX	10/20/1999
MOSS, CHERYTA A; SAN DIEGO, CA	10/20/1999
NICOLAIDES, HENRY D; CARBONDALE, IL	10/20/1999
OLAJIDE, GBOLAHAN A; LOS ANGELES, CA	10/20/1999
ONEIL, LORI L; LA PORTE, IN	10/20/1999
OWUSU, VICTOR I; KALAMAZOO, MI	10/20/1999
PERRYMAN, RICHARD L; PHOENIX, AZ	10/20/1999
PHILIPSON, DAVID; HUNTINGTON BCH, CA	10/20/1999
POLLACK, MARK A; JAMAICA, NY	10/20/1999
POWELL, JONATHAN P; POTTSTOWN, PA	10/20/1999
PRESSMAN, DAVID; LORTON, VA	10/20/1999
RAFII, AHMAD R; SAN JOSE, CA	10/20/1999
RAVINSKI, DEBORAH G; PLYMOUTH, MA	10/20/1999
SAMBOR, DAVID H; LOCKPORT, NY	10/20/1999
SANDERS, DONALD E; INDIAN HARBOUR BCH, FL	10/20/1999
SCHUM, DAVID K; BROWNWOOD, TX	10/20/1999
SEKULITS, NELLY M; MAYAGUEZ, PR	10/20/1999
SIMS–FORD, CHERYL D; ELMORE CITY, OK	10/20/1999
SMITH, DAVID R; WICHITA, KS	10/20/1999
TEIXEIRA, JULIO A; NEW ROCHELLE, NY	10/20/1999
TENNANT, MICHAEL D; WHEATRIDGE, CO	10/20/1999
TILLOTSON, MARK; CHAPEL HILL, NC	10/20/1999
TUEL, MARC A; NEWARK, NJ	10/20/1999
TURNER-WHITE, SHARON V; MIAMI, FL	10/20/1999
WALSH, GREGORY A; S DAYTONA BEACH, FL	10/20/1999
WILLIAMS, RUSSELL C; VACAVILLE, CA	10/20/1999
WILLIAMS, MATTHEW T; SAN ANTONIO, TX	10/20/1999
WILSON, MICHAEL F; TOPEKA, KS	10/20/1999
YORK, WILLIAM C; GREEN COVE SPNGS, FL	10/20/1999

Dated: October 5, 1999.

Joanne Lanahan,

Director, Health Care Administrative Sanctions, Office of Inspector General.

[FR Doc. 99–26828 Filed 10–13–99; 8:45 am]

BILLING CODE 4150–04–P

DEPARTMENT OF THE INTERIOR

Fish and Wildlife Service

Notice of Receipt of Applications for Permit

The following applicants have applied for a permit to conduct certain activities with endangered species. This notice is provided pursuant to section 10(c) of the Endangered Species Act of 1973, *as amended* (16 U.S.C. 1531, *et seq.*):

PRT–018124

Applicant: Walter F. Broich, Edina, MN

The applicant requests a permit to import the sport-hunted trophy of one male bontebok (*Damaliscus pygargus dorcas*) culled from a captive herd maintained under the management program of the Republic of South Africa, for the purpose of enhancement of the survival of the species.

PRT–17898

Applicant: Utah's Hogle Zoo/Utah Zoological Society, Salt Lake City, UT

The applicant requests a permit to import one female captive-born Siberian Tiger, (*Panthera tigris altaica*) from Metro Toronto Zoo, Toronto, Canada for breeding purposes and public display.

PRT–017646

Applicant: Hector Gonzalez, Dorado, PR

The applicant requests a permit to import the sport-hunted trophy of one male bontebok (*Damaliscus pygargus dorcas*) culled from a captive herd maintained under the management program of the Republic of South Africa, for the purpose of enhancement of the survival of the species.

PRT–016660

Applicant: USGS/National Wildlife Health Center, Madison, WI

The applicant requests a permit to export egg yolks taken from infertile eggs of captive-born Puerto Rican parrots (*Amazona vittata*) to Scottish Agricultural College, Scotland, United Kingdom for the purpose of enhancement of the survival of the species through scientific research. This notification covers activities conducted by the applicant over a five-year period.

Written data or comments should be submitted to the Director, U.S. Fish and Wildlife Service, Office of Management Authority, 4401 North Fairfax Drive, Room 700, Arlington, Virginia 22203 and must be received by the Director within 30 days of the date of this publication.

Documents and other information submitted with these applications are available for review, *subject to the requirements of the Privacy Act and Freedom of Information Act,* by any party who submits a written request for a copy of such documents to the following office within 30 days of the date of publication of this notice: U.S. Fish and Wildlife Service, Office of Management Authority, 4401 North Fairfax Drive, Room 700, Arlington, Virginia 22203. Phone: (703/358-2104); FAX: (703/358–2281).

Dated: October 8, 1999.

Kristen Nelson,

Acting Chief, Branch of Permits, Office of Management Authority.

[FR Doc. 99–26836 Filed 10–13–99; 8:45 am]

BILLING CODE 4310–55–P

DEPARTMENT OF THE INTERIOR

Fish and Wildlife Service

Issuance of Permit for Marine Mammals

On July 8, 1999, a notice was published in the **Federal Register**, Vol. 64, No. 130, Page 36891, that an application had been filed with the Fish and Wildlife Service by Mike H. Boyd, Cartersville, GA for a permit (PRT–014003) to import one polar bear (*Ursus maritimus*) trophy taken from the Lancaster Sound population, Canada for personal use.

Notice is hereby given that on August 16, 1999, as authorized by the provisions of the Marine Mammal Protection Act of 1972, *as amended* (16 U.S.C. 1361 *et seq.*) the Fish and Wildlife Service authorized the requested permit subject to certain conditions set forth therein.

Documents and other information submitted for these applications are available for review by any party who submits a written request to the U.S. Fish and Wildlife Service, Office of Management Authority, 4401 North Fairfax Drive, Room 700, Arlington, Virginia 22203. Phone (703) 358–2104, or Fax (703) 358–2281.

Dated: October 8, 1999.

Kristen Nelson,

Acting Chief, Branch of Permits, Office of Management Authority.

Documents and other information submitted with the application are available for review, *subject to the requirements of the Privacy Act and Freedom of Information Act,* by any party who submits a written request for a copy of such documents to the above address within 30 days of the date of publication of this notice.

[FR Doc. 99–26835 Filed 10–13–99; 8:45 am]

BILLING CODE 4310–55–P

DEPARTMENT OF THE INTERIOR

Geological Survey

Notice of Availability of Information

AGENCY: U.S. Geological Survey, Department of the Interior.

ACTION: Notice of availability of information.

SUMMARY: The U.S. Geological Survey (USGS) is proposing to change a long-standing policy regarding access to documents compiled by the Defense Minerals Administration, the Defense Minerals Exploration Administration, and the Office of Minerals Exploration. Previously, only the record title holder of the underlying property or a person with written permission from the record title holder had access to the documents. The USGS purposes to make this information available to any requester.

EFFECTIVE DATE: December 1, 1999.

ADDRESSES: Kathleen M. Johnson, U.S. Geological Survey, 913 National Center, Reston, VA 20192.

FOR FURTHER INFORMATION CONTACT: Kathleen M. Johnson, 703–648–6110.

SUPPLEMENTARY INFORMATION: In 1950, Congress enacted the Defense Production Act, 50 U.S.C. App. § 2061 *et seq.* authorizing the President to ''make provision * * * for the encouragement of exploration, development, and mining of critical and strategic minerals, metals, and materials.'' *Id.* § 2093. The President delegated his authority under the Act to various Federal agencies, including the Department of the Interior. Exec. Order No. 10,161, 15 FR 6105 (1950). Under this delegated authority, the Secretary of the Interior established the Defense Minerals Administration (DMA). Sec. Order No. 2605, 15 FR 8718 (1950). The DMA's purpose was to maintain production from existing mineral sources, to expand production from known but inactive sources, and to provide Government support for exploration of new mineral deposits. GEORGE F. HOWE, UNITED STATES DEPARTMENT OF THE INTERIOR, HISTORY OF DEFENSE AGENCIES, Part IV (1953). To further the third stated purpose, the DMA started a program to provide funds for exploration projects for ''unknown or undeveloped sources of strategic or critical metals and minerals.'' Mineral Order No. 5, 16 FR 3183 (1951). Before its termination on November 20, 1951, the DMA received 1,015 requests for assistance. *Id.* at 77. Of these, as of October 30, 1951, 153 had resulted in contracts, 324 had been denied, 40 had been withdrawn by the applicant, and 489 were pending. *Id.* at Appendix VI, Part IV.

Although the DMA had been terminated, the Department of the Interior continued the program for exploration assistance with the formulation of the Defense Minerals Exploration Administration (DMEA). Secretarial Order No. 2726, 18 FR 3804 (1953). The DMEA operated similarly to the DMA. See DMEA Order No. 1, 17 FR 2090 (1952). The DMEA was terminated on June 30, 1958. 23 FR 4003 (1958). Before its termination, the DMEA received 3,888 applications for assistance, and 1,159 applications were approved and executed into contracts. H.R. Rep. No. 85–2276, 1958 U.S.C.C.A.N. 3701. Of the applications executed into contract, 337 were certified as having discovered a significant amount of ore. *Id.* At the time the DMEA was terminated, there were 170 contracts in force. *Id.*

In August of 1958, Congress enacted Public Law 85–701, 72 Stat. 700 (1958), authorizing the Secretary of the Interior to enter into exploration contracts providing for Government financial assistance for the discovery of domestic mineral reserves. 30 U.S.C. 641 *et seq.* Under this authority, the Secretary of the Interior established the Office of Minerals Exploration (OME). Secretarial Order No. 2834, 23 FR 7555 (1958). The program for exploration assistance under the OME was similar to that under the DMA and DMEA. See 30 CFR part 301 (1958).

In 1965, OME and its functions were transferred to the USGS. 30 FR 2865 (1965). After fiscal year 1974, USGS did not request appropriations for new contract funds, and in 1979, Congress discontinued funding for the OME program.

These programs produced a variety of technical information in the proposed work plans, monthly progress reports, inspection reports, final reports (final reports were prepared by both the Government and the contractor), and audits, among other routine correspondence between the application and the Government. The Government entered into contracts with entities in 44 States; the 6 States that did not have contracts are Delaware, Indiana, Nebraska, North Dakota, Ohio, and Rhode Island. The files from these contracts were stored in various Federal archival locations. However, in 1996, the USGS consolidated all of the DMA, DMEA, and OME files in its office in Spokane, Washington.

Access to the information contained in the files was limited to either the current property owner or to anyone with a letter of authorization from the current property owner. USGS had limited access to these documents because of the business-sensitive nature of some information contained within them. USGS recently reviewed both its authority to withhold the information contained in these files and the policy of withholding the information. As a result of this review, USGS believes that because the exploration assistance programs are no longer in existence, and the vast majority of the properties and companies described no longer exist in their original forms, release of this information will not harm the business interests of the companies or

individuals who submitted it. For these reasons, USGS believes it is no longer necessary to withhold this information, and is seeking comments on this proposed change in its policy.

Dated: October 7, 1999.

P. Patrick Leahy,

Chief Geologist, U.S. Geological Survey.

[FR Doc. 99–26759 Filed 10–13–99; 8:45 am]

BILLING CODE 4310–Y7–M

DEPARTMENT OF THE INTERIOR

Geological Survey

Digital Earth Interagency Working Group; Meeting

AGENCY: U.S. Geological Survey.

ACTION: Notice of meeting.

SUMMARY: The Digital Earth Interagency Working Group, chaired by NASA with representatives from other Federal departments and agencies, will hold an open meeting at the USGS facility in Reston, Virginia, to discuss options for a near-term demonstration of the Digital Earth vision (for details visit *www.digitalearth.gov*). Throughout Federal, State, and local government, the private sector, and other public sector interests, there exist data, infrastructure, partnerships, and capability to support the exploitation of geospatial information to answer questions of concern to students, researchers, community leaders, and others. The goal of this meeting will be to identify existing and emerging data, infrastructure, and tools that can be brought together to provide an ''alpha version'' of the Digital Earth vision in a limited number of use contexts (e.g., students asking a question about the effects of pollution on their community). The results of this discussion may lead to subsequent Commerce Business Daily requests for proposals.

DATES: The meeting will be held in the USGS main Auditorium on Monday, October 25, 1999, commencing at 8 a.m. and adjourning at 1 p.m.

FOR FURTHER INFORMATION CONTACT: To reserve a space at the meeting, please contact Mr. Mark Reichardt at (703) 648–5742, or via e-mail at *mreichardt@usgs.gov*. Although the meeting is open to all interested parties, space is limited and will be allocated on a first come basis. Please limit requests to one member of your organization.

Dated: October 6, 1999.

John A. Kelmelis,

Acting Chief, National Mapping Division.

[FR Doc. 99–26758 Filed 10–13–99; 8:45 am]

BILLING CODE 4310–Y7–M

DEPARTMENT OF THE INTERIOR

Bureau of Land Management

[MT–010–1430–01; MTM–88157]

Notice of Closure of Public Land to Certain Uses in Yellowstone County, MT

AGENCY: Bureau of Land Management, Interior

ACTION: Closure of 765 acres of public land to the use of motorized vehicles and mechanized vehicles, the discharge of firearms, horseback riding, hang gliding, and rock climbing.

SUMMARY: Notice is served that public land located approximately one mile directly east of downtown Billings, Montana, known as the Four Dances Natural Area (formerly known as Sacrifice Cliff or the Larsen property), is closed to the use of off-highway vehicles (OHVs) and mechanized vehicles including mountain bicycles, the discharge of any firearms including pellet guns, horseback riding, hang gliding, and rock climbing. The closure will be in effect beginning on November 1, 1999, and remain in effect until public consultation is completed and an activity plan for the area is approved. OHV use includes all types of motor vehicles except for those authorized for administration operations, law enforcement, and property maintenance or other BLM management programs. This closure is necessary to protect public land and adjacent private property, and for public safety. More detailed information, the legal land description and survey plats of the area are on file at the Billings Field Office.

Also, effective November 1, 1999, the Four Dances Natural Area will be open for restricted use as a walk-in area for hiking, picnicking, cross country skiing, and wildlife viewing. The area will be open daily to the public from 30 minutes before sunrise to 30 minutes after sunset. Camping will be allowed by permit only. Dogs must be leashed and under the control of the owner. Fires and firewood cutting are prohibited.

FOR FURTHER INFORMATION CONTACT: Sandra S. Brooks, Field Manager, BLM, Billings Field Office, P.O. Box 36800, 5001 Southgate Drive, Billings, MT 59107-6800 or call 406–896–5013.

SUPPLEMENTARY INFORMATION: Authority for this action is outlined in sections 302, 303, and 310 of the Federal Land Policy and Management Act of October 21, 1976, (43 U.S.C. 1716) and Title 43 Code of Federal Regulations Subject 8341 (43 CFR 8341.2) and 8364 (43 CFR 8364.1). Any person who fails to comply with this closure is subject to citation or arrest and a fine up to $1,000 or imprisonment not to exceed 12 months, or both. This closure applies to all persons except persons authorized by the Bureau of Land Management.

Dated: October 6, 1999.

Sandra S. Brooks,

Field Manager.

[FR Doc. 99–26873 Filed 10–13–99; 8:45 am]

BILLING CODE 4310–84–P

DEPARTMENT OF THE INTERIOR

Bureau of Land Management

[CA–930–5410–00–ZBKC; CACA 41100]

Conveyance of Mineral Interests in California

AGENCY: Bureau of Land Management, Interior.

ACTION: Notice of segregation.

SUMMARY: The private land described in this notice, aggregating 51.00 acres, is segregated and made unavailable for filings under the general mining laws and the mineral leasing laws to determine its suitability for conveyance of the reserved mineral interest pursuant to section 209 of the Federal Land Policy and Management Act of October 21, 1976. The mineral interests will be conveyed in whole or in part upon favorable mineral examination. The purpose is to allow consolidation of surface and subsurface of minerals ownership where there are no known mineral values or in those instances where the reservation interferes with or precludes appropriate nonmineral development and such development is a more beneficial use of the land than the mineral development.

FOR FURTHER INFORMATION CONTACT: Kathy Gary, Bureau of Land Management, California State Office, 2800 Cottage Way, Sacramento, California 95825, (916) 978–4677.

Mount Diablo Meridian

T. 26 S., R. 37 E.,
Sec. 7, NE¼SW¼, N½SE¼SW¼.
County—Kern
As Reservation—All coal and other minerals.

Upon publication of this Notice of Segregation in the **Federal Register** as

provided in 43 CFR 2720.1–1(b), the mineral interests owned by the United States in the private lands covered by the application shall be segregated to the extent that they will not be subject to appropriation under the mining and mineral leasing laws. The segregative effect of the application shall terminate by publication of an opening order in the **Federal Register** specifying the date and time of opening; upon issuance of a patent or other document of conveyance to such mineral interest; or two years from the date of publication of this notice, whichever occurs first.

Dated: September 30, 1999.

David McIlnay,

Chief, Branch of Lands.

[FR Doc. 99–26830 Filed 10–13–99; 8:45 am]

BILLING CODE 4310–40–P

DEPARTMENT OF THE INTERIOR

National Park Service

Notice of Availability of the Reference Manual #32 for Use With Director's Order #32 Concerning Relationships Between the National Park Service and Cooperating Associations

AGENCY: National Park Service, Interior.

ACTION: Public Notice.

SUMMARY: The National Park Service (NPS) is converting and updating its current system of internal instructions to a three-level system consisting of: (1) NPS Management Policies; (2) Director's Orders; and (3) Reference Manuals/Handbooks and other helpful information. When these documents contain new policy or procedural requirements that may affect parties outside the NPS, this information is being made available for public comment. Previously, Directors' Order #32 was released and Reference Manual #32 is an operational guide for implementing this previous document that establishes operational policies and procedural guidance concerning relationships between the NPS and Cooperating Associations. Cooperating Associations are private non-profit organizations that provide interpretive and educational services in many areas of the National Park System.

DATES: Written comments will be accepted until November 15, 1999.

ADDRESSES: Send comments to Glenn Clark, Servicewide Cooperating Association Coordinator, Room 7312, National Park Service, 1849 C Street NW., Washington, DC.

FOR FURTHER INFORMATION CONTACT: Glenn Clark at 202–565–1058.

Glen Clark,

Servicewide Coordinator for Cooperating Association.

[FR Doc. 99–26863 Filed 10–13–99; 8:45 am]

BILLING CODE 4310–70–M

DEPARTMENT OF THE INTERIOR

Bureau of Reclamation

INT–DES–99–39

Bostwick Division, Frenchman-Cambridge Division, and Kanaska Division, Almena Unit

AGENCY: Bureau of Reclamation, Interior.

ACTION: Notice of availability and public hearing on draft environmental impact statement (DEIS).

SUMMARY: Pursuant to section 102(2)(C) of the National Environmental Policy Act of 1969, as amended, the Department of the Interior, Bureau of Reclamation, has prepared a DEIS on the proposed renewal of long-term water supply contracts for irrigation water from Federal projects in the Republican River basin in Nebraska and Kansas. The DEIS describes five alternatives, including no action, and evaluates the environmental consequences of renewing the long-term water supply contracts and of modifications to reservoir operations. Public hearings have been scheduled to provide interested parties an opportunity to provide oral or written comments on the proposed renewal of long-term water supply contracts.

DATES: A 60-day public review and comment period commences with the publication of this notice. Written comments on the DEIS should be submitted by December 13, 1999.

Written comments from interested parties unable to attend the hearings, those not wanting to make oral presentations, or those wishing to supplement their oral presentations at the public hearing should be transmitted to the Nebraska-Kansas Area Office by December 13, 1999, for inclusion in the public record.

Public hearings have been scheduled from 6:30 to 9:30 p.m. on the following dates:

- November 2, 1999, Belleville, Kansas.
- November 3, 1999, Alma, Nebraska.
- November 4, 1999, McCook, Nebraska.

ADDRESSES: The public hearing locations are:

- Harvester Room in the Jensik Insurance Building, 1309 Eighteenth Street, Belleville, Kansas.
- Johnson Community Center, 509 Main Street, Alma, Nebraska.
- Community Building, West Fifth and O Streets, McCook, Nebraska.

Written comments on the DEIS should be submitted to the Area Manager (Attention: Judy O'Sullivan), Nebraska-Kansas Area Office, P.O. Box 1607, Grand Island NE 68802.

You may request a Summary of the DEIS or the entire DEIS (with appendices) in printed copy or on computer disk. Copies may be obtained from the above address or by telephone (308) 389–4622 x211. Copies are also available for public inspection and review on the Internet at ''www.gp.usbr.gov'' in the ''Current Activities'' section under ''Environmental Activities.''

See Supplementary Information section for additional addresses where the DEIS is available for public inspection and review.

FOR FURTHER INFORMATION CONTACT: Jill Manring, Basin Study Coordinator, Nebraska-Kansas Area Office, P.O. Box 1607, Grand Island NE 68802—telephone (308) 389–4622 x214.

SUPPLEMENTARY INFORMATION:

DEIS Public Inspection and Review Locations

Offices

- Bureau of Reclamation, Nebraska-Kansas Area Office, 203 West Second Street, Grand Island NE 68801—telephone (308) 389–4622
- Bureau of Reclamation, Great Plains Regional Office, 316 North 26th Street, Billings MT 59101—telephone (406) 247–7638
- Bureau of Reclamation, Reclamation Service Center Library, Building 67, Room 167, Denver Federal Center, Sixth and Kipling, Denver CO 80225—telephone (303) 445–2072
- Bureau of Reclamation, Program Analysis Office, Room 7456, 1849 C Street NW, Washington DC 20240—telephone (202) 208–4662
- Bostwick Irrigation District in Nebraska, Red Cloud NE
- Kansas Bostwick Irrigation District No. 2, Courtland KS
- Frenchman-Cambridge Irrigation District, Cambridge NE
- Frenchman Valley and H&RW Irrigation District, Culbertson NE
- Almena Irrigation District, Almena KS

Libraries

- Alma Public Library, West Second Street, Alma NE 68920–3378

• Blue Hill Public Library, 317 West Gage Street, Blue Hill NE 68930–2068
• Butler Memorial Library, 621 Pennsylvania, Cambridge NE 69022
• Franklin Public Library, 1502 P Street, Franklin NE 68939–1200
• Hastings Public Library, 517 West Fourth Street, Hastings NE 68901–7560
• Imperial Public Library, 703 Broadway Street, Imperial NE 69033–4017
• Kearney Public Library, 2020 First Avenue, Kearney NE 68847–5306
• McCook Library, 802 Norris Avenue, McCook NE 69001–3143
• Nelson Public Library, 10 West Third Street, Nelson NE 68961–1246
• Red Cloud Public Library, 537 North Webster Street, Red Cloud NE 68970–2421
• Carnegie Public Library, 449 North Kansas Street, Superior NE 68978–1852
• Trenton Village Library, 406 East First Street, Trenton NE 69044
• Wauneta City Library, 319 North Tecumseh, Wauneta NE 69045–2011
• Almena Public Library, 415 Main, Almena KS 67622
• Belleville Public Library, 1327 Nineteenth Street, Belleville KS 66935
• Courtland City Library, 403 Main Street, Courtland KS 66939
• Northwest Kansas Library System, 2 Washington Square, Norton KS 67654

Hearing Process Information

Organizations and individuals wishing to present oral statements are strongly encouraged to contact Judy O'Sullivan, Bureau of Reclamation, Nebraska-Kansas Area Office, at the address above or telephone (308) 389–4622 x211 to announce their intention to participate in the public hearing. Requests to make presentations will also be accepted at the hearings. Written statements may also be submitted at the hearings.

Oral statements at the public hearings will be limited to 5 minutes. If time permits, the hearing officer may allow speakers to extend their oral statement after all persons wishing to comment have been heard. Whenever possible, speakers will be scheduled according to the time preference requested in their letter or telephone request. Scheduled speakers not present at the public hearing when called will lose their privilege in the scheduled order and will be recalled at the end of all the scheduled speakers. Those registering at the meetings may choose from the remaining time slots.

Please notify Reclamation at least 2 weeks in advance of the scheduled hearing if you require special needs in order to participate in the public hearing. Those having special needs should contact Judy O'Sullivan at (308) 389–4622 x211 or through the Federal Relay System at (800) 877–8339 or via e-mail at ''josullivan@gp.usbr.gov''. Smoking will be prohibited in the hearing room and surrounding area.

Dated: September 25, 1999

Fred R.Ore,

Area Manager, Nebraska-Kansas Area Office.

[FR Doc. 99–26633 Filed 10–13–99; 8:45 am]

BILLING CODE 4310–94–P

DEPARTMENT OF JUSTICE

Notice of Lodging of Consent Decree Pursuant to the Comprehensive Environmental Response, Compensation and Liability Act

In accordance with the policy of the Department of Justice, 28 U.S.C. 50.7, and pursuant to Section 122(d)(2) of the Comprehensive Environmental Response Compsenation and Liability Act, 42 U.S.C. 9601 *et seq.*, (''CERCLA''), notice is hereby given that a proposed consent decree in *United States* v. *Akzo Nobel A.B.*, Civ. No. 1:99–CV–731, was lodged with the United States District Court for the Western District of Michigan, on September 22, 1999. The action was brought by the United States against fourteen defendants seeking the performance of a remedial action at the Bofors Noble Superfund Site in Muskegon, Michigan, and reimbursement of response costs incurred in connection with site.

The settling parties are Akzo Nobel A.B., American Cyanamid Company, Bissel, Inc., E.I. DuPont DeNemours and Company, Dow Agrosciences LLC, Eli Lilly Company, General Electric Company, IBM Corporation, Lomac, Inc., Mallinckrodt, Inc., Monsanto Company, Shell Oil Company, Smithkline Beecham Corporation, and Union Carbide Corporation.

Under the proposed settlement, eight of the settlors will be responsible for performing the response action at the Bofors Nobel site. The remaining parties will contribute funds in the amounts set forth in the proposed decree which will be used to finance the work, reimburse response costs incurred by the United States Environmental Protection Agency in connection with the site, and pay natural resource damages arising from releases of hazardous substances at the site. Under the proposed consent decree, the Environmental Protection Agency will provide mixed funding, up to an amount of $7.2 million, to assist in financing the remedial action at the site.

The proposed consent decree may be examined at: (1) The Office of the United States Attorney for the Western District of Michigan, The Law Building, 330 Ionia Avenue, N.W., 5th Floor, Grand Rapids, Michigan, 49503, (616–456–2404); (2) the United States Environmental Protection Agency (Region 5), 77 West Jackson Boulevard, Chicago, Illinois 60604–3590 (contact Thomas Kruegar (312–886–0562); and, (3) a copy of the proposed Consent Decree may be obtained by mail from the Department of Justice Consent Decree Library, P.O. Box 7611, Ben Franklin Station, Washington DC 20044. When requesting a copy, please refer to *United States* v. *Akzo Nobel, A.B. et al.* D.J. Ref. 90–11–3–191A, and enclose a check in the amount of $38.75 for the consent decree only (155 pages at 25 cents per page reproduction costs), or $251.50 for the consent decree and all appendices (1006 pages), made payable to the Consent Decree Library.

Joel M. Gross,

Chief, Environmental Enforcement Section, Environmental and Natural Resources Division.

[FR Doc. 99–26822 Filed 10–13–99; 8:45 am]

BILLING CODE 4410–15–M

DEPARTMENT OF JUSTICE

Notice of Lodging of Consent Decree Pursuant to the Clean Air Act

Notice is hereby given that on October 4, 1999, the United States lodged a proposed consent decree with the United States District Court for the Western District of Michigan, in *United States* **v.** *Georgie Boy Manufacturing, Inc.*, Civil No. 1:99–CV–772, under section 113(b) of the Clean Air Act, 42 U.S.C. 7413(b). The proposed consent decree resolves certain claims of the United States against Georgie Boy, Manufacturing Inc. (''Georgie Boy''), arising out of its recreational vehicle manufacturing facility located in Edwardsburg, Cass County, Michigan. Under the proposed Consent Decree Georgie Boy will pay the United States a $99,000 penalty and perform a Supplemental Environmental Project (''SEP'').

The Department of Justice will receive comments relating to the proposed Consent Decree for 30 days following publication of this Notice. Comments should be addressed to the Assistant Attorney General, Environment and Natural Resources Division, United States Department of Justice, P.O. Box 7611, Ben Franklin Station, Washington, DC 20044–7611, and should refer to *United States* v. *Georgie Boy*

Manufacturing, Inc., Civil No. 1:99–CV–772, 90–5–2–1–2259. The proposed Consent Decree may be examined at the Office of the United States Attorney for the Western District of Michigan, Grand Rapids, Michigan; the Region V Office of the United States Environmental Protection Agency, 77 West Jackson Boulevard, Chicago, Illinois 60604. A copy of the proposed Consent Decree may be obtained by mail from the Department of Justice Consent Decree Library, P.O. Box 7611, Washington, DC 20044. In requesting a copy, please enclose a check for reproduction costs (at 25 cents per page) in the amount of $5.00 for the Decree, payable to the Consent Decree Library.

Joel M. Gross,

Chief, Environmental Enforcement Section, Environment and Natural Resources Division.

[FR Doc. 99–26825 Filed 10–13–99; 8:45 am]

BILLING CODE 4410–15–M

DEPARTMENT OF JUSTICE

Notice of Lodging of Consent Decree Pursuant to the Comprehensive Environmental Response, Compensation and Liability Act

Notice is hereby given that on October 4, 1999, the United States lodged with the Court a proposed Fourth Consent Decree under the Comprehensive Environmental Response, Compensation, and Liability Act, as amended (''CERCLA''), 42 U.S.C. 9601 *et seq.* in *United States* v. *Brown Co., et al.,* No. 1:96–CV–949 (W.D. Mich). The Consent Decree resolves certain claims of the United States against Exide Corporation, Fisher Steel & Supply Company, the H. Brown Co., Inc., Tessie Brown and Tessie Brown as the Independent Personal representative of the Estate of Herman Brown (''Owner Settling Defendants''), Padnos Iron & Metal Company (''Padnos''), and General Motors Company (''GM''). GM will conduct the Remedial Action, as well as pay future costs of overseeing the implementation of the remedial action, under Sections 106 and 107(a) of CERCLA, 42 U.S.C. 9607(a), at the H. Brown Superfund Site (''Site'') located in Walker, Kent County, Michigan. The other settling defendants under this Consent Decree will pay an additional $204,500.

The Department of Justice will receive comments relating to the proposed Consent Decree for 30 days following publication of this Notice. Comments should be addressed to the Assistant Attorney General, Environmental and Natural Resources Division, United States Department of Justice, P.O. Box 7611, Ben Franklin Station, Washington, DC 20044–7611, and should refer to *United States* v. *H. Brown Co., et al.,* D.J. Ref. No. 90–11–2–835A. The proposed Consent Decree may be examined at the Office of the United States Attorney for the Western District of Michigan; the Region V Office of the United States Environmental Protection Agency, 77 West Jackson Boulevard, Chicago, Illinois 60604. A copy of the proposed Consent Decree may be obtained by mail from the Department of Justice Consent Decree Library, P.O. Box 7611, Washington, DC 20044. In requesting a copy, please enclose a check for reproduction costs (at 25 cents per page) in the amount of $20.25 for the Decree without appendices, payable to the Consent Decree Library. Appendices will be an additional $20.75 (total: $41.00).

Joel M. Gross,

Chief, Environmental Enforcement Section, Environment and Natural Resources Division.

[FR Doc. 99–26823 Filed 10–13–99; 8:45 am]

BILLING CODE 4410–15–M

DEPARTMENT OF JUSTICE

Notice of Lodging Consent Decree Pursuant to the Clean Water Act

In accordance with Departmental Policy, 28 CFR 50.7, notice is hereby given that a proposed Consent Decree in *United States* v. *Interstate General Company, et al.,* Civ. No. AW–96–1112 (D. Md., So. Div.), was lodged with the United States District Court for the District of Maryland, Southern Division, on August 26, 1999. This Consent Decree has been entered into by the Plaintiff United States and Defendants Interstate General Company, L.P., and St. Charles Associates, L.P., pursuant to Section 309 (b) and (d) of the Clean Water Act, 33 U.S.C. 1319 (b) & (d), providing for injunctive relief and imposing civil penalties upon the Defendants for discharge of dredged or fill material in violation of section 301(a) of the Clean Water Act, 33 U.S.C. 1311(a), at four sites in St. Charles, a planned community near Waldorf, Charles County, Maryland.

The Consent Decree prohibits additional illegal discharges by the Defendants, and requires Defendants to, among other things: (1) Pay a $360,000 civil penalty to the United States; (2) escrow $40,000 to be used for additional wetland plantings in open spaces on one of the parcels located in Dorchester Neighborhood; (3) carry out remediation plans at two parcels, Parcel L and Town Center South, that will result in the restitution of fourteen (14) acres of wetlands and the creation of new wetlands and wetland buffers on fifty-seven (57) acres; and (4) place deed restrictions or conservation easements on all remediation sites identified in the consent decree.

The Department of Justice will accept written comments relating to this proposed Consent Decree for thirty (30) days from the date of publication of this notice. Please address comments to Lynne A. Battaglia, United States Attorney for the District of Maryland, United States Department of Justice, Attention: W. Warren Hamel, AUSA, 101 W. Lombard Street, Baltimore, Maryland 21012, and refer to *United States* v. *Interstate General Company,* Civ. No. AW–96–1112 and USAO No. 96–00096.

The proposed Consent Decree may be examined at the Clerk's Office, United States District Court for the District of Maryland, Southern Division, 6500 Cherrywood Lane, Greenbelt, Maryland 20770.

W. Warren Hamel,

Chief, Environmental Crimes and Enforcement Section, U.S. Attorney's Office, District of Maryland.

[FR Doc. 99–26826 Filed 10–13–99; 8:45 am]

BILLING CODE 4410–15–M

DEPARTMENT OF JUSTICE

Notice of Lodging of Consent Decree Pursuant to the Comprehensive Environmental Response, Compensation, and Liability Act of 1980, as Amended

Consistent with Departmental policy 28 CFR 50.7, 38 FR 19029, and 42 U.S.C. 9622(d), notice is hereby given that on October 4, 1999, a proposed Consent Decree in *United States* v. *Richard Mottolo, K.J. Quinn & Co., Inc., et al.,* Civil Action No. 83–547–B, was lodged with the United States District Court for the District of New Hampshire. The proposed Consent Decree will resolve the United States' claims under the Comprehensive Environmental Response, Compensation, and Liability Act (''CERCLA''), 42 U.S.C. 9601, *et seq.,* on behalf of the U.S. Environmental Protection Agency (''EPA'') against the K.J. Quinn & Co., Inc., relating to the Mottolo Superfund Site (''Site'') located in Raymond, New Hampshire. The K.J. Quinn & Co., Inc., was previously adjudicated liable under Section 107(a) of CERCLA, 42 U.S.C. 96097(a).

Pursuant to the Consent Decree, the K.J. Quinn & Co., Inc., has agreed to reimburse to the United States $2,000,000 for costs incurred and to be

incurred by the DPA at the Mottolo Site after May 1, 1990. Costs that were incurred by the DPA prior to May 1, 1990, were addressed in a previous consent decree with the K.J. Quinn & Co., Inc. The K.J. Quinn & Co., Inc., has already paid $1,445,949 of the $2,000,000 amount and is to make the remaining payment of $554,051, along with interest from October 16, 1998, within 7 days of entry of this Consent Decree.

The Department of Justice will receive for a period of thirty (30) days from the date of this publication comments relating to the proposed consent decree. Any comments should be addressed to the Assistant Attorney General of the Environment and Natural Resources Division, Department of Justice, Washington, D.C. 20530, and should refer to *United States* v. *Richard Mottolo, K.J. Quinn & Co., Inc., et al.*, Civil Action No. 83–545–B, D.J. Ref. 90–11–2–17.

The proposed consent decree may be examined at the Office of the United States Attorney, District of New Hampshire, 55 Pleasant Street, Concord, New Hampshire 03301 and at Region I, Office of the Environmental Protection Agency, One Congress St., Boston, MA 02203. A copy of the proposed consent decree may also be obtained by mail from the Department of Justice Consent Decree Library, P.O. Box 7611, Washington, D.C. 20044. In requesting a copy, please enclose a check (there is a 25 cent per page reproduction cost) in the amount of $6.50 payable to the Consent Decree Library.

Bruce Belber,

Deputy Chief, Environmental Enforcement Section, Environment and Natural Resources Division.

[FR Doc. 99–26824 Filed 10–13–99; 8:45 am]

BILLING CODE 4410–15–M

DEPARTMENT OF JUSTICE

Notice of Lodging of Settlement Stipulation Pursuant to the Clean Air Act

Under 28 CFR 50.7, notice is hereby given that a proposed Stipulation and Order for Dismissal in *United States* v. *State of Wisconsin Inc.*, Civ. No. 98–C–0517–C., was lodged with the United States District Court for the Western District of Wisconsin, on September 27, 1999. That action was brought against defendant pursuant to sections 112 and 113 of the Clean Air Act (''the Act''), 42 U.S.C. 7412, 7413, and associated regulations, for violations occurring at the University of Wisconsin, Madison campus. Specifically, the amended compliant alleged that defendant violated the Act and the National Emission Standards for Hazardous Air Pollutants for asbestos, 40 CFR Part 61, subpart M, by failing to keep adequately wet and properly dispose of asbestos-containing material during a renovation of two buildings on the campus. The settlement stipulation requires defendant to pay $36,000 to resolve the claims alleged in the complaint.

The Department of Justice will receive comments relating to the proposed settlement stipulation for a period of 30 days from the date of this publication. Comments should be addressed to the Assistant Attorney General of the Environment and Natural Resources Division, Department of Justice, Washington, DC 20530. All comments should refer to *United States* v. *State of Wisconsin*, D.J. Ref. 90–5–2–1–2106.

The proposed settlement stipulation may be examined at the office of the United States Attorney for the Western District of Wisconsin, 660 West Washington Avenue, Madison, Wisconsin 53701–1585; and at the Region V office of the Environmental Protection Agency, 77 West Jackson Blvd., Chicago, Illinois 60604. A copy of the proposed stipulation may also be obtained by mail from the Department of Justice Consent Decree Library, P.O. Box 7611, Washington, DC. 20044. In requesting a copy, please enclose a check in the amount of $2.75 for the stipulation (25 cents per page reproduction costs) payable to the Consent Decree Library. When requesting a copy, please refer to the *United States* v. *State of Wisconsin*, D.J. Ref. 90–5–2–1–2106.

Joel M. Gross,

Chief, Environmental Enforcement Section, Environment and Natural Resources Division.

[FR Doc. 99–26827 Filed 10–13–99; 8:45 am]

BILLING CODE 4410–15–M

DEPARTMENT OF LABOR

Employment and Training Administration

Notice of Determinations Regarding Eligibility To Apply for Worker Adjustment Assistance and NAFTA Transitional Adjustment Assistance

In accordance with section 223 of the Trade Act of 1974, as amended, the Department of Labor herein presents summaries of determinations regarding eligibility to apply for trade adjustment assistance for workers (TA–W) issued during the period of September, 1999.

In order for an affirmative determination to be made and a certification of eligibility to apply for worker adjustment assistance to be issued, each of the group eligibility requirements of section 222 of the Act must be met.

(1) That a significant number or proportion of the workers in the workers' firm, or an appropriate subdivision thereof, have become totally or partially separated,

(2) That sales or production, or both, of the firm or subdivision have decreased absolutely, and

(3) That increases of imports of articles like or directly competitive with articles produced by the firm or appropriate subdivision have contributed importantly to the separations, or threat thereof, and to the absolute decline in sales or production.

Negative Determinations for Worker Adjustment Assistance

In each of the following cases the investigation revealed that criterion (3) has not been met. A survey of customers indicated that increased imports did not contribute importantly to worker separations at the firm.

TA–W–36,306; Blount, Inc., Owatonna, MN

TA–W–36,534 & A, B, C; Thomaston Mill, Inc., Thomaston, GA, Zebulon, GA New York, NY and Los Angeles, CA

TA–W–36,438; Maine Envelope Co., Belgrade, ME

TA–W–36,483; Brookman Cast Industries, Inc., Salem, OR

TA–W–36,454; Sonat Exploration Co., Houston, TX

TA–W–36,700, & A, B, C; Downing Wellhead Equipment, Inc., Oklahoma Cty, OK, Midland, TX, Houston, TX and Corpus Christi, TX

TA–W–36,580; Scientific Drilling International, Oklahoma City, OK

TA–W–36,375; Allied Signal, Inc., Ironton, OH

TA–W–36,025; Conoco, Inc., Natural Gas and Gas Products Div., Houston, TX & Operating at Various Locations: A; LA, B; NM, C; OK, D; TX, E; VA, and F; WV

TA–W–36,388; Heel Rite Corp., Wright City, MO

TA–W–36,227; R & M Energy Systems, a/k/a/ Flow Control Equipment, Borger, TX

TA–W–36,548; Caterpillar Work Tools, Dallas, TX

TA–W–36,608; Western Gas Resources, Inc., Midland, TX

TA–W–36,597; Pelton Co., Inc., Ponca City, OK

TA–W–36,612; Buffalo Color Corp., Buffalo, NY

TA–W–36,707; Consolidation Coal Co., Loveridge Mine #22, Fairview, WV

TA–W–36,806; Rexam Medical Packaging, Madison, WI

In the following cases, the investigation revealed that the criteria for eligibility have not been met for the reasons specified.

TA–W–36,767; Diesel Recon Co., Santa Fe Springs, CA

TA–W–36,539; Veco Pacific, Inc., Formerly Vecco Engineering, Inc., Bellingham, WA

TA–W–36,678 & A; Samedan Oil Corp., Denver, CO and Oklahoma City, OK

TA–W–36,661; American and Efird, Inc., Meridian, MS

TA–W–36,469; Insurdata Imaging Service, Price, UT

TA–W–36,437; Buffalo Jeans/David Bitton, Secaucus, NJ

TA–W–36,740; Animas Public School System, Animas, NM

TA–W–36,676; Koch Industries, Inc., Wichita, KS

TA–W–36,749; Midwestern Oilfield Service, Inc., Tioga, ND

TA–W–36,818; Chevron Pipeline Co., New Orleans, LA

TA–W–36,646; J and R Consulting Service, Inc., Tioga, ND

TA–W–35,675; Oilfield Safety, Inc., Williston, ND

TA–W–36,751; CGG–TLC Data Processing Center, Inc., Richardson, TX Houston, TX

TA–W–36,609; Western Geophysical/ Baker Hughes, Houston, TX

TA–W–36,407; Centrilift, Div. of Baker Hughes, Denver, CO

TA–W–36,639; American International/ Airways, Inc., Oscoda, MI

TA–W–36,671; Pride Refining, Inc., Abilene, TX

TA–W–36,536; Martin County Residential Service Inc., d/b/a/ Martin Enterprises, Williamston, NC

TA–W–36,455; Energy Group, Inc., Hobbs, NM

TA–W–36,493; Apex Engineering, d/b/a Mora Inc., Evanston, WY

The workers firm does not produce an article as required for certification under Section 222 of the Trade Act of 1974.

TA–W–36,610; Weldon Machine Tool, Inc., York, PA

TA–W–36,359; Motorola—Semiconductor Product Sector, Auston, TX

TA–W–36,269; Continental Apparel Sales, De Funiak Springs, FL

TA–W–36,784; Dura Automotive Systems, Inc., Spring Lake, MI

TA–W–36,823; Furst Mc-Ness Co., Longview, TX

TA–W–36,728; Wellman, Inc.,—Wool Div., Johnsonville, SC

TA–W–36,797; *Regional Recycling LLC, Attalla, AL*

TA–W–36,701; Michael Foods, Inc., Monark Egg Div., Kansas City, MO

TA–W–36,795; Dresser Equipment Group, Roots Div., Connersville, IN

TA–W–36,807; Island Creek Coal Co., VP #8 Mine and Preparation Plant, Oakwood, VA

TA–W–36,692; Smith Tool, Ponca City, OK

TA–W–36,508; Trico Industries, Inc., San Marcos, TX

TA–W–35,530; Newcom, Inc., Westlake Village, CA

TA–W–36,144; Liz Claiborne, Sample Making Dept. North Bergen, NJ

TA–W–36,352; Bain Industries, Fort Worth, TX

TA–W–36,627; American National Can, Longview, TX

TA–W–36,059; Kaiser Aluminum Castings, Canton, OH

TA–W–36,173; Quality Veneer and Lumber, Young and Morgan Lumber Div., Lyons, OR

TA–W–36,769; American Meter Co., Industrial Products Business Unit, Erie, PA

TA–W–36,651; Chief Supply Corp., American Resources Div., Eugene, OR

TA–W–36,680; Fairfield Machine Co., Inc., Columbiana, OH

TA–W–36,577; Statoil Exploration (US), Inc., Houston, TX

TA–W–36,745; Muskin Leisure Products, Inc., Wilkes-Barre, PA

TA–W–36,403; Evans Machine Works, Inc., Hobbs, NM

TA–W–36,442; Philips Lighting Co., Fairmont, WV

TA–W–36,754; Lucas Varity, North American Light Vehicle Braking Systems, Mount Vernon, OH

TA–W–36,521 & A; Permac, Inc., Bluefield, VA and Oakwood, VA

Increased imports did not contribute importantly to worker separations at the firm.

TA–W–36,369; Wyman Gordon, Albany Div., Albany, OR

The investigation revealed that criteria (1) and criteria (2) have not been met. A significant number or proportion of the workers did not become totally or partially separated from employment as required for certification. Sales or production did not decline during the relevant period as required for certification.

TA–W–36,607; Big ''6'' Drilling Co., Houston, TX

The investigation revealed that criteria (1) has not been met. A significant number or proportion of the workers did not become totally or partially separated from employment as required for certification.

TA–W–36,712; Harken Energy Corp., Houston, TX

TA–W–36,423; Ovalstrapping, Inc., Hoquiam, WA

The investigation revealed that criteria (2) has not been met. Sales or production did not decline during the relevant period as required for certification.

TA–W–36,747; Enron Oil and Gas Co., Corpus Christi, TX

The investigation revealed that criteria (2) and criteria (3) have not been met. Sales or production did not decline during the relevant period as required for certification. Increases of imports or articles like or directly competitive with articles produced by the firm or an appropriate subdivision have not contributed importantly to the separations or threat thereof, and the absolute decline in sales or production.

Affirmative Determinations for Worker Adjustment Assistance

The following certifications have been issued; the date following the company name and location of each determination references the impact date for all workers of such determination.

TA–W–36,647; Cluett, Peabody & Co., Inc., The Enterprise plant, Enterprise, AL, The Austell Plant, Austell, GA and New York NY: August 10, 1998

TA–W–36,416; Baldwin Piano & Orgon Co., Assembly Dept, Conway, AR June 3, 1998

TA–W–36,464; Giro Sport Design, Santa Cruz, CA: June 15, 1998

TA–W–36,615; Lynn Fashion, Hobokin, NJ: July 2, 1998

TA–W–36,399; Anderson Bros & Johnson Co., Inc., Wausau, WI: May 21, 1998

TA–W–36,621 & A, B; Dart Energy Corp., Beckman Production Service, Kalkalska, MI, Dart Oil and Gas Corp., Mason, MI and Dart Energy Corp., Sharp Trucking and Construction, Mt. Pleasant, MI: July 20, 1998

TA–W–36,522 & A; Inter-National Childrenswear, Snead, AL and Birmingham, AL: June 9, 1998

TA–W–36,564; Vision Ease Lens, Inc., St. Cloud, MN: July 7, 1998

TA–W–36,421; Jones Apparel Group, Inc., Bristol, PA: May 21, 1998

TA–W–36,657; Modine Aftermarket Holdings, Inc., Merced, CA: July 19, 1998

TA–W–36,475; Unitog, Concordia, MO: June 7, 1998

TA–W–36,669; Apparel Sales and Printing, Inc., Alabama Cut and Sew Factory, Prattville, AL: July 28, 1998.

TA–W–36,636; Southwestern Cutting Service, EL Paso, TX: July 21, 1998.

TA–W–36,406; Baker Hughes Centrilift, Anchorage, AK: May 21, 1998
TA–W–36,665; Supreme Tooling, Inc., Freemont, IN: July 23, 1998.
TA–W–36,565; Husky Injection Molding Systems, Pittsfield, MA: June 28, 1998
TA–W–36,659 & A, B; Janner Sayre, Inc., d/b/a Sayre Knits, Plant #3, Sayre, PA and Plant #2, South Montrose, PA and Plant #1, Orwigsburg, PA: July 26, 1998
TA–W–36,742; John Crane, Inc., Crystal Falls, MI: August 11, 1998
TA–W–36,736; Water Valley Manufacturing, Water Valley, MS: August 9, 1998
TA–W–36,734; Jennings Mft. Co., Inc., Jennings, LA: August 10, 1998
TA–W–35,772; Cross Country Apparel, Inc., Savannah, TN: August 5, 1998.
TA–W–36,690; Globe Tailoring, Cincinnati, OH: July 30, 1998
TA–W–36,553; Buster Rich, d/b/a JPN Service Co., Denver City, TX: July 1, 1998
TA–W–36,780; Vans, Inc., Santa Fe Springs, CA: July 30, 1998
TA–W–36,682; S. Schwab Co., Cumberland, MD: April 4, 1999
TA–W–36,711; Petroplex Acidizing, Midland, TX: July 28, 1998
TA–W–36,504; Galax Apparel Corp., Galax, VA: June 23, 1998
TA–W–36,581; Phelps Dodge Hidalgo, Inc., Playas, NM: July 19, 1998
TA–W–36,645; Jet Composites, Inc., Bluffton, IN: July 23, 1998
TA–W–36,448; Wales Fabrics, Knitting Plant, Dye/Finishing Plant, Gastonia, NC: June 8, 1998
TA–W–36,460; Maine RuBber Int'l RIM Shop, Scarborough, ME: June 12, 1998
TA–W–36,501; Becton-Dickinson, Hancock, NY: June 21, 1998
TA–W–35,426; Technifoam Mirror Craft, Ferrum, VA: June 3, 1998
TA–W–36,549; F & M Manufacturing, Inc., Westminster, MD: June 25, 1998
TA–W–36,716; Philadelphia Glass Bending, Inc., Philadelphia, PA: August 12, 1998
TA–W–36,155; Athens Furniture Industries, Inc., Statesville, NC: April 14, 1998
TA–W–36,758; Blount, Inc., Spencer Cylinders, Spencer, WI: August 9, 1998
TA–W–36,402; BWD Automotive of Alabama, Selma, AL: June 2, 1998
TA–W–36,726; Lone Star Mud, Inc., Midland, TX: August 5, 1998
TA–W–36,653; URI, Inc., Kingsville, TX: July 21, 1998
TA–W–36,488; Overly-Raker, Inc., McConnelsburg, PA: June 17, 1998
TA–W–36,478; Weatherford Arrow Completion Systems, Midland, TX: June 14, 1998
TA–W–36,802 & A; U.S. Sports, Inc., Huntingdon, PA and Lake Worth, FL: August 20, 1998
TA–W–36,748; Capitan Corp., Odessa, TX: August 12, 1998
TA–W–36,606; Phillips Petroleum Co, Exploration & Production (E & P), Bartlesville, OK and Operating at Various Locations in The Following States; A; CO, B; KS, C; LA, D; OK, E; NM, F; TX, G; UT: July 16, 1998
TA–W–36,527; PGS Tensor, Inc., Houston, TX: June 28, 1998
TA–W–36,625; Phelps Dodge Refining Corp., a/k/a Phelps Dodge Industries, Inc., El Paso, TX: June 22, 1998
TA–W–36,630; Tower Automotive, Inc., Rockford, IL: July 23, 1998
TA–W–36,258; Burlen Corp., Fitzgerald, GA: May 14, 1998
TA–W–36,414; Harrison Alloys, Inc., Harrison, NJ: June 3, 1998
TA–W–36,485, Emhart Glass Manufacturing, Inc., Windsor, CT: June 14, 1999.
TA–W–36,424; Regiana Fashions, West New York, NJ: June 4, 1998
TA–W–36,544; Guidon, Inc., Muskegon, MI: July 7, 1998
TA–W–36,576; Texas Pipe Coupling, Div. of PMC Industries, Hughes Spring TX: July 7, 1998
TA–W–36,551; Winer Industries, Inc., Paterson, NJ: July 2, 1998
TA–W–36,346; Green River Steel, Owensboro, KY: May 3, 1998
TA–W–36,467; Kimberly-Clark Corp., Pulp Mill and Southeast Timberlands, Mobile, AL: June 14, 1998
TA–W–36,080; Mead Corp., Binder Dept., Mead School and Office Products, Saint Joseph, MO: March 25, 1998
TA–W–36,587; 5B's, Inc., Martinsville, VA: June 28, 1998
TA–W–36,590; Biochem Immunosystems, Inc., Allentown, PA: July 12, 1998
TA–W–36,561; Oxford International Ltd., Chicago, IL: June 29, 1998
TA–W–36,151; Adflex Solutions, Inc., Chandler, AZ: April 20, 1998
TA–W–36,599 & A; Plymouth Mills, Staten Island, NY and Brazos Embroidery, Millersburg, PA: July 10, 1998
TA–W–36,753; Sarah's Attic, Chesaning, MI: August 18, 1998
TA–W–36,640; Huck Jacobson, Kenilworth, NJ: July 19, 1998
TA–W–36,547; Spalding Sport Worldwide, Inc., Gloversville, NY: June 29, 1998
TA–W–36,756; Walkin Shoe Co., Schuylkill Haven, PA: August 17, 1998
TA–W–36,761; Hunter Sadler, Tupelo, MS: August 18, 1998
TA–W–36,683; Honeywell, Inc., Industrial Automation and Control Div., Phoenix, AZ: July 16, 1999.
TA–W–36,790; Geissler Knitting Mills, Inc., Hazelton, PA: August 18, 1998
TA–W–36,731 & A; Stone Manufacturing Co., Johnston, SC and Columbia, SC: August 11, 1998
TA–W–36,722 & TA–W–36,723; Pleasant Hill Manufacturing Co., Cutting & Warehousing Dept., Baxter Spring, KS and Sewing Dept., Adair, OK: August 13, 1998
TA–W–36,766; Foremost Mobile Drilling Co., Indianapolis, IN: August 17, 1998
TA–W–36,679; ARCO Permian, Longview Gas Plant, Longview, TX: July 22, 1998
TA–W–36,569; West Texas Drilling Fluids, Inc., Midland, TX: August 12, 1998

Also, pursuant to Title V of the North American Free Trade Agreement Implementation Act (P.L. 103–182) concerning transitional adjustment assistance hereinafter called (NAFTA–TAA) and in accordance with Section 250(a), Subchapter D, Chapter 2, Title II, of the Trade Act as amended, the Department of Labor presents summaries of determinations regarding eligibility to apply for NAFTA–TAA issued during the month of September, 1999.

In order for an affirmative determination to be made and a certification of eligibility to apply for NAFTA–TAA the following group eligibility requirements of Section 250 of the Trade Act must be met:

(1) That a significant number or proportion of the workers in the workers' firm, or an appropriate subdivision thereof, (including workers in any agricultural firm or appropriate subdivision thereof) have become totally or partially separated from employment and either—

(2) That sales or production, or both, of such firm or subdivision have decreased absolutely,

(3) That imports from Mexico or Canada of articles like or directly competitive with articles produced by such firm or subdivision have increased, and that the increases in imports contributed importantly to such workers' separations or threat of separation and to the decline in sales or production of such firm or subdivision; or

(4) That there has been a shift in production by such workers' firm or

subdivision to Mexico or Canada of articles like or directly competitive with articles which are produced by the firm or subdivision.

Negative Determinations NAFTA–TAA

In each of the following cases the investigation revealed that criteria (3) and (4) were not met. Imports from Canada or Mexico did not contribute importantly to workers' separations. There was no shift in production from the subject firm to Canada or Mexico during the relevant period.

NAFTA–TAA–03391; Marion Mills, LLC, Marion, NC
NAFTA–TAA–03348; AMP, Inc., Clearwater, FL
NAFTA–TAA–03172; California Webbing Industries, Inc., Los Angeles, CA
NAFTA–TAA–03211; Ayers Manufacturing Co., Inc., Coward, SC
NAFTA–TAA–03357; AMP, Inc., Pringed Circuit Board (PCB) Div., Loganville West Plant, Building 143, Loganville, PA
NAFTA–TAA–03417; Salem Lumber Services, A Div. of Woodward and Dickerson, Salem, OR
NAFTA–TAA–03409; AMP, Polymer Processing Center, Glen Rock, PA
NAFTA–TAA–03400; Ratholes, Inc., Snyder, TX
NAFTA–TAA–03356; Michael Foods, Inc., Monark Eff Div., Kansas City, MO
NAFTA–TAA–03384; Greif Bros. Corp., Westfield, MA
NAFTA–TAA–03312; Western Gas Resources, Inc., Midland, TX
NAFTA–TAA–03354; Placer Dome Corp., Bald Mountain Mine, Elko, NY
NAFTA–TAA–03288; Martin County Residential Services, Inc., d/b/a Martin Enterprises, Williamston, NC
NAFTA–TAA–03333; Biochem Immunosystems, Inc., Allentown, PA
NAFTA–TAA–03396; West Texas Drilling Fluids, Inc., Midland, TX
NAFTA–TAA–03355; Livingston Engineers, Inc., Sulphur, LA
NAFTA–TAA–03428; S & B Engineers & Constructors, Ltd, Odessa, TX
NAFTA–TAA–03338; Huck Jacobson, Kenilworth, NJ
NAFTA–TAA–03419; Milco Industries, Inc., Bloomsburg, PA
NAFTA–TAA–03381; Pleasant Hill Manufacturing Co., Cutting and Warehouse Dept., Baxter Springs, KS
NAFTA–TAA–03380; Pleasant Hill Manufacturing Co., Sewing Dept., Adair, OK
NAFTA–TAA–03168; Continental Apparel Sales, De Funiak, Springs, FL
NAFTA–TAA–03430; Diesel Recon Co., Santa Fe Springs, CA
NAFTA–TAA–03335; Ransom Industries, Tyler Pipe Industries, Tyler, TX
NAFTA–TAA–03280; Caterpillar Work Tools, Dallas, OR
NAFTA–TAA–03372; Muskin Leisure Products, Inc., Wilkes-Barre, PA
NAFTA–TAA–03253; Wales Fabrics, Knitting Plant, Dye/Finishing Plant, Gastonia, NC
NAFTA–TAA–03368; American Meter Co, Industrial Products Business Unit, Erie, PA
NAFTA–TAA–03133; Quality Veneer and Lumber, Young and Morgan Lumber Div., Lyons, OR
NAFTA–TAA–03350; Cross Country Apparel, Inc., Savannah, TN
NAFTA–TAA–03321; American National Can, Longview, TX
NAFTA–TAA–03411; Dresser Equipment Group, Roots Div., Connersville, IN
NAFTA–TAA–03252; Ovalstrapping, Inc., Hoquiam, WA
NAFTA–TAA–03436; Sarah's Attic, Chesaning, MI
NAFTA–TAA–03139; R & M Energy Systems, a/k/a flow Control Equipment, Borger, TX
NAFTA–TAA–03309; Newcom, Inc., Westlake Village, CA
NAFTA–TAA–03364; Dura Automotive Systems, Inc., Spring Lake, MI
NAFTA–TAA–03228; Heel Rite Corp., Wright City, MO
NAFTA–TAA–03279 & A, B, C; Thomaston Mills, Inc., Thomaston, GA, Zebulon, GA, New York, NY, Los Angeles, CA

The investigation revealed that the criteria for eligibility have not been met for the reasons specified.

NAFTA–TAA–03430; Diesel Recon Co., Santa Fe Springs, CA
NAFTA–TAA–03399; John E. Fox, Inc., El Paso, TX
NAFTA–TAA–03461; Scovill Fasteners, Inc., El Paso, TX
NAFTA–TAA–03371; Liz Claiborne, Inc., El Paso, TX
NAFTA–TAA–03346; Fastrac Railroad Construction, Ely, NV
NAFTA–TAA–03341; Western States Minerals Corp., Reno, NV
NAFTA–TAA–03412; Doyon Universal Services, Inc., Anchorage, AK

The investigation revealed that the workers of the subject firm did not produce an article within the meaning of Section 250(a) of the Trade Act, as amended.

Affirmative Determinations NAFTA–TAA

NAFTA–TAA–03219 & A; Warnaco, Inc., Stratford, CT and Bridgeport, CT: May 1, 1998
NAFTA–TAA–03314; Southwestern Cutting Service, El Paso, TX, CA: July 1, 1998
NAFTA–TAA–03331; Invensys Appliance Controls, New Stanton, PA: July 23, 1998
NAFTA–TAA–03463; GKN Sinter Metals, Van Wert, OH: September 14, 1998
NAFTA–TAA–03115; D and E Wood Products, Prineville, OR: April 20, 1998
NAFTA–TAA–03431; John Crane, Inc., Crystal Falls, MI: August 11, 1998
NAFTA–TAA–03394; C.R. Bard, Bard Access Systems Div., Salt Lake City, UT: July 9, 1998
NAFTA–TAA–03462; Comptec, Inc., Custer, WA: September 3, 1998
NAFTA–TAA–03385; MK Contract Service, Inc., El Paso, TX: August 19, 1998
NAFTA–TAA–03283; International Business Machines Corp. (IBM), Storage Systems Div., San Jose, CA: June 21, 1998. ''All workers engaged in activities related to the production of RMSS products and sliders.'' And ''All workers engaged in activities related to the production of HDD products and activities of the HGA/HSA group are denied eligibility to apply of NAFTA–TAA''
NAFTA–TAA–03395; Ikon Office Solutions, Remanufacturing Div., Jefferson City, MO: August 24, 1998
NAFTA–TAA–03413 & A; Louisiana Pacific Corp., Chilco Sawmill, Chilco, ID and Sandpoint Planer Mill, Sandpoint, ID: August 31, 1998
NAFTA–TAA–03432; Amco Convertible Fabrics, Adrian, MI: September 3, 1998
NAFTA–TAA–03358; Brake Parts, Inc., Amherst, NY: July 16, 1998
NAFTA–TAA–03452; Kanthal Globar, Niagara Falls, NY; September 13, 1998
NAFTA–TAA–03244; Midwestco Enterprises, Inc., Chicago, IL: May 26, 1998
NAFTA–TAA–03392; Rexam Medical Packaging, Madison, WI: August 24, 1998
NAFTA–TAA–03401; Hunter Sadler, Tupelo, MS: August 19, 1998
NAFTA–TAA–03458; Rama Group of Companies, Inc., Charm Graphics, Cheektowaga, NY: August 11, 1998
NAFTA–TAA–03337; Vision-Ease Lens, Inc., St. CLoud, MN: June 30, 1998

''All workers who produced plastic lenses'' and ''All workers who were engaged in the production of glass lenses are denied eligibility to apply for NAFTA–TAA''

NAFTA–TAA–03200; Anderson Bros. & Johnson Co., Inc., Wausau, WI: May 21, 1998

NAFTA–TAA–03370; Fahnos Apparel, Inc., El Paso, TX: August 18, 1998

NAFTA–TAA–03373; Foremost Mobile Drilling Co., Indianapolis, IN: August 17, 1998

NAFTA–TAA–03353 & A, B; Sara Lee Sock Co., Finishing Plant, High Point, NC and Mt. Airy, NC, Seaming Dept., Kernersville, NC: August 16, 1998

NAFTA–TAA–03322; Jet Composites, Inc., Bluffton Plant, Bluffton, IN: July 23, 1998

NAFTA–TAA–03366; Tandycrafts, Inc., d/b/a Tandy Leather Co., Ft. Worth, TX: August 18, 1998

NAFTA–TAA–03313; Bunger Steel, Inc., Phoenix, AZ: July 19, 1998

NAFTA–TAA–03264; Maine Rubber Int'l RIM Shop, Scarborough, ME: June 12, 1998

NAFTA–TAA–03259; Unitog, Concordia, MO: June 7, 1998

NAFTA–TAA–03362; Blount, Inc., Spencer Cylinders, Spencer, WI: August 9, 1998

NAFTA–TAA–03329; Ultramar Diamond Shamrock, Total Petroleum Products Div. (TPI), Alma, MI: June 8, 1998

NAFTA–TAA–03050; Mead Corp., Mead School and Office Products, Binder Dept., Saint Joseph, MO: March 24, 1998

NAFTA–TAA–03422; Crescent/U.S. Mat, LLC, Seattle, WA: August 27, 1998

NAFTA–TAA–03315; Justin Boot Co., Fort Worth, TX: July 21, 1998

NAFTA–TAA–03383; Glenoit Corp., Jacksboro, TN: August 23, 1998

I hereby certify that the aforementioned determinations were issued during the month of September, 1999. Copies of these determinations are available for inspection in Room C–4318, U.S. Department of Labor, 200 Constitution Avenue, NW, Washington, DC 20210 during normal business hours or will be mailed to persons who write to the above address.

Dated: October 7, 1999.

Grant D. Beale,

Program Manager, Office of Trade Adjustment Assistance.

[FR Doc. 99–26767 Filed 10–13–99; 8:45 am]

BILLING CODE 4510–30–M

DEPARTMENT OF LABOR

Employment and Training Administration

[TA–W–36,825]

Chahta Enterprise, Dekalb, MS; Notice of Termination of Investigation

Pursuant to section 221 of the Trade Act of 1974, an investigation was initiated on September 13, 1999 in response to a worker petition which was filed on behalf of workers at Chahta Enterprise, Dekalb, Mississippi.

All workers of the subject film are included under an investigation currently in process (TA–W–36,641). Consequently, further investigation in this case would serve no purpose, and the investigation has been terminated.

Signed at Washington, D.C. this 28th day of September 1999.

Grant D. Beale,

Program Manager, Office of Trade Adjustment Assistance.

[FR Doc. 99–26763 Filed 10–13–99; 8:45 am]

BILLING CODE 4510–30–M

DEPARTMENT OF LABOR

Employment and Training Administration

[TA–W–36,793/

McWilliam Forge, Rockaway, NJ; Notice of Termination of Investigation

Pursuant to section 221 of the Trade Act of 1974, an investigation was initiated on September 7, 1999, in response to a worker petition which was filed on behalf of workers at McWilliam Forge, Rockaway, New Jersey.

The petition seeking Trade Adjustment Assistance was signed by only one person, who was not authorized by the subject firm to file the petition as a company official, and who was not an authorized representative of the workers, two requirements of the regulations at 29 CFR 90.11(b). Consequently, the petition is invalid and the investigation has been terminated.

Signed at Washington, D.C. this 21st day of September, 1999.

Grant D. Beale,

Program Manager, Office of Trade Adjustment Assistance.

[FR Doc. 99–26762 Filed 10–13–99; 8:45 am]

BILLING CODE 4510–30–M

DEPARTMENT OF LABOR

Employment and Training Administration

[TA–W–36,733]

Pabst Engineering, Onalaska, WI; Notice of Termination of Investigation

Pursuant to section 221 of the Trade Act of 1974, an investigation was initiated on August 23, 1999 in response to a worker petition which was filed on behalf of workers at Pabst Engineering, Onalaska, Wisconsin.

All workers of the subject firm are included under an investigation currently in process (TA–W–36,638). Consequently, further investigation in this case would serve no purpose, and the investigation has been terminated.

Signed at Washington, D.C. this 24th day of September 1999.

Grant D. Beale,

Program Manager, Office of Trade Adjustment Assistance.

[FR Doc. 99–26764 Filed 10–13–99; 8:45 am]

BILLING CODE 4510–30–M

DEPARTMENT OF LABOR

Employment and Training Administration

[TA–W–36,813]

Thomson Financial Company Investext Group, Boston, MA; Notice of Termination of Investigation

Pursuant to section 221 of the Trade Act of 1974, an investigation was initiated on September 7, 1999 in response to a worker petition which was filed on behalf of workers and former workers at the Investext Group of Thomson Financial Company, located in Boston, Massachusetts (TA–W–36,813).

The petitioning group of workers are subject to an ongoing investigation for which a determination has not yet been issued (TA–W–36,616).

Consequently, further investigation in this case would serve no purpose, and the investigation has been terminated.

Signed at Washington, DC this 16th day of September 1999.

Grant D. Beale,

Program Manager, Office of Trade Adjustment Assistance.

[FR Doc. 99–26765 Filed 10–13–99; 8:45 am]

BILLING CODE 4510–30–M

DEPARTMENT OF LABOR

Employment and Training Administration

Job Corps: Preliminary Finding of No Significant Impact (FONSI) for the New Job Corps Center Located off of Schoolland Woods Road in Exeter, RI

AGENCY: Employment and Training Administration, Labor.

ACTION: Preliminary Finding of No Significant Impact (FONSI) for the New Job Corps Center to be located off of Schoolland Woods Road in Exeter, Rhode Island.

SUMMARY: Pursuant to the Council on Environmental Quality Regulation (40 CFR Part 1500–08) implementing procedural provisions of the National Environmental Policy Act (NEPA), and the Department of Labor, Employment and Training Administration, Office of Job Corps, in accordance with 29 CFR 11.11(d), gives notice that an Environmental Assessment (EA) has been prepared and the proposed plans for a new Job Corps Center will have no significant environmental impact. This Preliminary Finding of No Significant Impact (FONSI) will be made available for public review and comment for a period of 30 days.

DATES: Comments must be submitted by November 15, 1999.

ADDRESSES: Any comment(s) are to be submitted to Michael O'Malley, Employment and Training Administration, Department of Labor, 200 Constitution Avenue, NW, Room N–4659, Washington, DC, 20210, (202) 219–5468 ext. 115 (this is not a toll-free number).

FOR FURTHER INFORMATION CONTACT: Copies of the EA and additional information are available to interested parties by contacting Marcus Gray, Regional Director, Office of Job Corps—Region I, JFK Federal Building, Room E–350, Boston, MA 02203, (617) 565–2179 (this is not a toll-free number).

SUPPLEMENTARY INFORMATION: This Environmental Assessment (EA) addresses the proposed re-use of a small portion of the former Ladd Center for the proposed Exeter Job Corps Center. The EA identifies the subject property for the proposed facility as an approximately 19.65-acre site located on Schoolland Woods Road, west of South County Trail Route 2, in Map ID 67, Block 4, Lot 1, in the City of Exeter, Washington County, Rhode Island. The proposal is to refurbish selected buildings of the former Ladd Center and construct additional buildings to create a campus setting in a rural location. The remainder portion of the former Ladd Center (approximately 270 acres) is targeted for commercial property development by the Rhode Island Economic Development Corporation (EDC).

The site of the proposed Exeter Job Corps Center is located in a rural area in northern Washington County, which lies in the southern portion of the State of Rhode Island. The site is currently developed with facilities from the former Ladd Center, which served as an institution for the care and rehabilitation of developmentally disabled persons of the State of Rhode Island. The State of Rhode Island has owned the site since at least 1907. The facilities were constructed between the years of 1914 and 1965. All of the buildings have been abandoned for the past eight to ten years. These buildings will require extensive renovation but were built for specific uses that will mirror the Job Corps' needs.

The proposed Exeter Job Corps Center will be a partially new and partially refurbished facility utilizing a campus setting. The facility will consist of several buildings which will support a proposed capacity of 200 Resident Students. The buildings will include dormitories, vocational shops, maintenance and warehouse facilities, a cafeteria, a physical fitness center, administration and support facilities, and classroom facilities. The gross area of the facility will be approximately 111,110 square feet (This square footage does not include the proposed outdoor recreation areas). The developed site will be approximately 19.65-acres of land, which will be leased for a 50-year term by the Department of Labor from the State of Rhode Island.

The construction/renovation of the Job Corps Center on this abandoned, developed site would be a positive asset to the area in terms of environmental and socioeconomic improvements, and long-term productivity. The proposed Job Corps Center will be a new source of employment opportunity for people in the Exeter, Rhode Island area. The Job Corps program provides basic education, vocational skills training, work experience, counseling, health care and related support services. This program is designed to graduate students who are ready to participate in the local economy.

The proposed project will not have any significant adverse impact on any natural system or resource. All construction or development activities that will possibly impact jurisdictional wetland areas will be in compliance with all federal and state requirements. No state or federal, proposed or listed, threatened or endangered species have been located on the subject property.

The site will require an archaeological assessment in order to conform with the National Historic Preservation Act. According to the Rhode Island Historic Preservation & Heritage Commission, the site lies in a very sensitive area concerning cultural resources. One (1) known pre-colonial Indian site (RI–931) is located at the northwest corner of the Former Ladd Center parcel. Another known site, (RI–962), lies nearby. Neither of these known historic sites is located on or adjacent to the proposed Job Corps Center. The environmental characteristics of the location (well-drained soils, level topography and abundance of freshwater wetlands) strongly suggest the presence of additional archaeological sites. The EDC is currently conducting an archeological assessment for the overall Ladd Center redevelopment. The construction and operation of the proposed facility will be conducted to minimize adverse impacts to historically significant or archeologically sensitive areas. The Department of Labor will design and develop the project in compliance with all State and Tribal Historic Preservation requirements.

Air quality and noise levels should not be affected by the proposed development project in this Special Zoning District in Exeter, Rhode Island. Due to the nature of the proposed project, it would not be a source of air pollutants or additional noise, except possibly during construction of the facility. The proposed Job Corps Center will not significantly increase the vehicle traffic in the vicinity. If air and noise pollution permits are required, all pollution sources will be permitted in compliance with applicable pollution control requirements.

The proposed project will not have any significant adverse impact on the surrounding water utility infrastructure, represented by water, sewer, and storm water systems. Water will be provided by the existing on-site wells and distribution system. The Rhode Island Department of Health provides water quality testing of public drinking water. The groundwater classification is GA/GAA groundwater, which is suitable for direct human consumption. On-site systems include three (3) wells, two (2) pumping stations and two (2) storage tanks. The site is currently equipped with an eight (8) inch loop that is reportedly adequate for the proposed usage. The condition of the distribution systems will require testing and possible upgrading by the EDC as necessary.

The Rhode Island Department of Environmental Management (RIDEM)

has indicated to the Department of Labor that an on-site sewage treatment and disposal system will be required for the proposed Job Corps Center. The sewage treatment and disposal system for the Job Corps Center will be constructed in accordance with all applicable RIDEM design, permitting, and modeling requirements. The sewage treatment and disposal system will be designed and constructed to minimize impacts to the local ground water overlay district. The EDC has indicated that the abandoned off-site sewage digester will be de-commissioned as necessary to comply with all applicable State and Federal regulations.

Storm water runoff from parking lots, sidewalks, and other structures will be managed in accordance with the requirements of the RIDEM Office of Water Resources/Permitting and the EPA program, and is not anticipated to adversely impact area surface-water quality. Currently, the proposed site is minimally equipped with storm sewers and catch basins. The majority of the site is composed of a natural surface (unpaved) which does not contribute significant run-off to the nearby jurisdictional wetlands. Additional storm sewers will be built as necessary to manage storm water flow from the Job Corps Center.

The State of Rhode Island and the Rhode Island Resource Recovery Inc. jointly operate the State Central Landfill. The State of Rhode Island is in the process of closing the smaller local landfills and centralizing all solid waste to the Central Landfill location. Representatives of the RIDEM Solid Waste Program reported that the Central Landfill has no specific estimated remaining life due to phased expansions of the landfill. Each city, such as the City of Exeter, has transfer stations where private citizens must bring all solid waste. Private transporters can be hired to transport waste to these stations or the Central Landfill. The majority of commercial operations hire private transporters and this will be the case for the proposed Job Corps facility.

The State of Rhode Island has a current recycling program called the ''OSCAR'' or ''Blue-Basket '' Program. Statewide participation in the recycling program is mandatory. The above-mentioned private transporters will also transport recyclable materials. The Job Corps Center will participate in all mandated recycling programs.

Narragansett Electric provides electric service to the project area. Providence Gas Company provides natural gas to the area, and Diamond State Telephone Company provides telephone service. All of these utilities have facilities in the vicinity, which are adequate to provide the required service. The proposed demands on the building utilities are not expected to have a significant adverse affect on the environment.

This portion of Washington County has a variety of transportation resources. Three interstate highways, U.S. Interstate-95, U.S. Interstate-4, and U.S. Interstate-1, and a system of state highways serve the subject property area. The West Kingston Amtrak Station is located approximately three (3) miles from the subject property. Commercial air service is found at the T. F. Green Airport in Warwick, Rhode Island, which is approximately twelve (12) miles from the subject property. The Rhode Island Public Transit (RIPT) which operates a bus system statewide provides public transportation. Seven days a week service is provided on one of the routes running along Route 2, which is a state route with a boarding point approximately 0.7-miles from the proposed center.

The proposed project will have no significant adverse affects on the local medical, emergency, fire and police services. The primary medical provider located closest to the subject property is South County Hospital. This facility is located approximately ten (10) miles from the subject property. Security services at the Exeter Job Corps will be provided by the center's staff with two (2) personnel on the day shift, three (3) on evening shift, and two (2) on the night shift. The proposed Center will be between the cities of Exeter and Fisherville, Rhode Island. The police department providing police services to the proposed subject property is the Rhode Island State Police, which is located approximately five (5) miles from the subject property.

The closest fire station to the project site is Station #1, located approximately one (1) mile south of the subject property on State Route 2. The Exeter Fire Department is a full time emergency response agency providing 24-hour service. The Exeter area utilizes the 911 emergency call system for all emergencies including fire and police. All emergency services are adequate for the project.

The alternatives considered in the preparation of the EA were as follows: (1) No Action; (2) Construction at an Alternate Site; and (3) Continue Construction as Proposed. The ''No Action'' alternative was not selected. The ''Alternate Site'' alternative was not selected. The U. S. Department of Labor, Employment and Training Administration (DOL/ETA) solicited proposals for alternative properties on March 10, 1998, and received five proposals. Of the five proposed sites evaluated by the Department of Labor, the subject property off of Schoolland Woods Road was the only site within the state of Rhode Island. Due to the adaptability of the existing structures on the site, the lack of alternative construction sites, and the absence of any identified adverse environmental impacts from locating a Job Corps Center at the subject property, the ''Continue Construction as Proposed'' alternative was selected.

Based on the information gathered during the preparation of the EA, no environmental liabilities, current or historical, were found to exist on the proposed Job Corps Center site. The construction of a Job Corps Center on the undeveloped parcel located off of Schoolland Woods Road in Exeter, Rhode Island will not create any significant adverse impacts on the environment.

Dated at Washington, DC, this 6th day of October, 1999.

Mary Silva,

Director of Job Corps.

[FR Doc. 99–26760 Filed 10–13–99; 8:45 am]

BILLING CODE 4510–30–P

DEPARTMENT OF LABOR

Employment and Training Administration

Job Corps: Preliminary Finding of No Significant Impact (FONSI) for the New Job Corps Center Located off of Overlook Terrace within the Charter Oak Business Park in Hartford, CT

AGENCY: Employment and Training Administration, Labor.

ACTION: Preliminary Finding of No Significant Impact (FONSI) for the New Job Corps Center to be located off of Overlook Terrace within the Charter Oak Business Park in Hartford, Connecticut.

SUMMARY: Pursuant to the Council on Environmental Quality Regulation (40 CFR part 1500–08) implementing procedural provisions of the National Environmental Policy Act (NEPA), and the Department of Labor, Employment and Training Administration, Office of Job Corps, in accordance with 29 CFR 11.11(d), gives notice that an Environmental Assessment (EA) has been prepared and the proposed plans for a new Job Corps Center will have no significant environmental impact. This Preliminary Finding of No Significant Impact (FONSI) will be made available

for public review and comment for a period of 30 days.

DATES: Comments must be submitted by November 15, 1999.

ADDRESSES: Any comment(s) are to be submitted to Michael O'Malley, Employment and Training Administration, Department of Labor, 200 Constitution Avenue, NW, Room N–4659, Washington, DC, 20210, (202) 219–5468 ext. 115 (this is not a toll-free number).

FOR FURTHER INFORMATION CONTACT: Copies of the EA and additional information are available to interested parties by contacting Marcus Gray, Regional Director, Region I (One) Office of Job Corps, JFK Federal Building, Room E–350, Boston, MA 02203, (617) 565–2179 (this is not a toll-free number).

SUPPLEMENTARY INFORMATION: The subject property is within the Charter Oak Business Park in Hartford, Hartford County, Connecticut. The subject property can be accessed via Overlook Terrace, a paved roadway. The EA indicates the subject property consists of an approximately 12-acre parcel of land, identified by the Hartford County Property Identification Number 0299, located in Map 105, Block 002, Lot 001. The subject property is undeveloped, recently cleared land (former public housing). The vicinity (one eight mile) around the subject property has undeveloped parcels (demolished public housing) of land as well as land developed with commercial, industrial, and residential properties.

The proposed site of the Hartford Job Corps Center is located in an area characterized by a suburban setting southwest of downtown Hartford. The site lies on the former location of the Charter Oak Terrace public housing project, which was built in 1941–1942. The public housing project has recently been demolished. The site is currently undeveloped and consists of sparsely scattered evergreen and deciduous clusters.

The proposed Hartford Job Corps Center will be a totally new facility utilizing a campus setting. The facility will consist of several buildings which will support 200 Non-resident Students. Classroom space will be provided in an education building. There will also be a vocational education building, a cafeteria/culinary arts building, a recreation building, an administration and medical/dental building, and a maintenance/warehouse building. The gross area of the facility will be 60,160 square feet (This square footage does not include the proposed outdoor recreation areas). The developed site will be approximately twelve (12) acres of land purchased by the Department of Labor from the State of Connecticut.

The construction of the Job Corps Center on this undeveloped parcel would be a positive asset to the area in terms of environmental and socioeconomic improvements, and long-term productivity. The proposed Job Corps Center will be a source of employment opportunity for people in the Hartford, Connecticut area. The Job Corps program provides basic education, vocational skills training, work experience, counseling, health care and related support services. This program is designed to graduate students who are ready to participate in the local economy.

The proposed project will not have any significant adverse impact on any natural system or resource. Construction and development activities will not impact jurisdictional wetlands. There are no ''historically significant'' buildings on the site and no areas of archaeological significance. No state or federal, proposed or listed, threatened or endangered species have been located on the subject property.

Air quality and noise levels should not be affected by the proposed development project in Hartford, Connecticut., except possibly temporarily during construction of the facility. If air and noise pollution permits are required, all pollution sources will be permitted in compliance with applicable pollution control requirements. The proposed Job Corps Center will not significantly increase vehicle traffic in the vicinity.

The proposed project will not have any significant adverse impact on the surrounding water infrastructure, represented by water, sanitary sewer, and storm water systems. The Metropolitan District Committee will provide a new eight-inch water main. The new water main will have a flow/pressure of 100 pounds per square inch (psi). The new water main and distribution systems will be designed to meet the needs of the Job Corps Facility and future developments that may arise in the vicinity.

The new southwest sanitary sewer interceptor (57-inch gravity sewer line) lies east of the site and will provide sewer service for the proposed Job Corps Center. This line continues approximately two miles north until it reaches the Pope Park Highway #4 siphon structure. At this point, the line merges with the Jefferson Street interceptor (54-inch gravity sewer line). This line merges with the Connecticut River interceptor (78-inch gravity sewer line) and continues to the Hartford Water Pollution Control Plant. The Hartford Water Pollution Control Plant has sufficient excess capacity to handle the wastewater flow from the proposed center.

The capacity of the existing storm drainage distribution system at the site is considered adequate for the proposed use. There are no retention/detention requirements for this property, and there are adequate storm water outfalls. No impact to downstream properties or surface waters is expected from storm water run-off from this site. Storm water runoff from parking lots, sidewalks, and other structures on the proposed Job Corps Center will be managed in accordance with the requirements of the Connecticut Department of Environmental Protection (CDEP), Bureau of Water Management.

The City of Hartford Resource Recovery Authority operates the Hartford Landfill. The estimated life remaining at the landfill is 3–5 years for by-pass waste, and 10–12 years for ash from the waste energy plant. The Resource Recovery Authority operates the waste energy plant to reduce solid waste entering the landfill. The City of Hartford collects residential solid waste, and private transporters collect commercial solid waste. All solid waste generated during construction and operation of the center will be disposed of in accordance with applicable waste management regulations.

Connecticut Light and Power provides electric service services to the project area. Natural gas is provided to the area by Connecticut Natural Gas, and telephone service is provided by Southern New England Telephone. All of the utilities have facilities and infrastructure which are adequate to provide the required service. The proposed increased demand on the building utilities is not expected to have a significant adverse affect on the environment.

The Hartford area has a variety of transportation resources. Five interstate highways, U.S. Interstate-84, U.S. Interstate-91, U.S. Interstate-2, I–3 and U.S. Interstate-5; several major federal routes; and a system of state highways serve the Hartford area. Passenger rail service is provided by Amtrak, which has a station located approximately 3-miles from the subject property at Church Street and Union Street. Commercial air service is found at Rentschler Airport, which is approximately 4.5 miles from the subject property. The Connecticut Transit Authority (CTA) operates a bus system providing public transportation in Hartford. Daily service is provided on one of the routes running along Flatbush

Avenue and Newfield Avenue to downtown Hartford. The nearest boarding point is on Flatbush Avenue approximately 800 feet from the subject property. The proposed project will have no significant adverse impacts on transportation services in the community.

There will be no significant increase in demand for local medical, emergency, fire and police services from the proposed project. The primary care facility located closest to the subject property is the St. Francis Memorial Hospital. There are also private medical facilities located throughout the Hartford area. Security services at the Hartford Job Corps will be provided by the center's staff, with two personnel on the day shift, three on evening shift, and two on the night shift. Police services to the proposed subject property will be provided by the Hartford Police Department, which is located approximately six (6) miles from the subject property. The state police assist the city police and county sheriff as necessary.

The City of Hartford will provide fire protection. The closest fire station to the project site is the Hartford Fire Department Station located at Pearl Street, which is approximately 0.25 miles from the project site. Backup assistance will be provided by the fire station at 611 Liberty Street. The Hartford Fire Department is a full time emergency response agency providing 24-hour service. The Hartford area utilizes the 911 emergency call system for all emergencies including fire and police. All emergency services in the area are adequate to meet the needs of the proposed Job Corps Center.

The proposed project will not have a significant adverse sociological effect on the City of Hartford community. The area is characterized by a fairly diverse ethnicity, and offers numerous educational and recreational opportunities. Similarly, the proposed project will not have a significant adverse affect on demographic and socioeconomic characteristics of the area.

The alternatives considered in the preparation of this EA were as follows: (1) No Action; (2) Construction at an Alternate Site; and (3) Continue Construction as Proposed. The ''No Action'' alternative was not selected. The ''Alternate Site'' alternative was not selected. The U. S. Department of Labor solicited proposals for new Job Corps Center sites on March 10, 1998, and received five proposals. Of the five site proposals, the only site within the State of Connecticut was the subject property on Overlook Terrace. Due to the suburban location, the lack of alternative construction sites, and the absence of any identified adverse environmental impacts from locating a Job Corps Center at the subject property, the ''Continue Construction as Proposed'' alternative was selected.

Based on the information gathered during the preparation of the EA, no environmental liabilities, current or historical, were found to exist on the proposed Job Corps Center site. The construction of a Job Corps Center on the undeveloped parcel located off of Overlook Terrace within the Charter Oak Business Park in Hartford, Connecticut, will not create any significant adverse impacts on the environment.

Dated at Washington, DC, this 6th day of October, 1999.

Mary Silva,

Director of Job Corps.

[FR Doc. 99–26761 Filed 10–13–99; 8:45 am]

BILLING CODE 4510–30–P

DEPARTMENT OF LABOR

Employment and Training Administration

Investigations Regarding Certifications of Eligibility To Apply for NAFTA Transitional Adjustment Assistance

Petitions for transitional adjustment assistance under the North American Free Trade Agreement—Transitional Adjustment Assistance Implementation Act (Pub. L. 103–182), hereinafter called (NAFTA–TAA), have been filed with State Governors under Section 250(b)(1) of Subchapter D, Chapter 2, Title II, of the Trade Act of 1974, as amended, are identified in the Appendix to this Notice. Upon notice from a Governor that a NAFTA–TAA petition has been received, the Director of the Office of Trade Adjustment Assistance (OTAA), Employment and Training Administration (ETA), Department of Labor (DOL), announces the filing of the petition and takes action pursuant to paragraphs (c) and (e) of Section 250 of the Trade Act.

The purpose of the Governor's actions and the Labor Department's investigations are to determine whether the workers separated from employment on or after December 8, 1993 (date of enactment of Pub. L. 103–182) are eligible to apply for NAFTA–TAA under Subchapter D of the Trade Act because of increased imports from or the shift in production to Mexico or Canada.

The petitioners or any other persons showing a substantial interest in the subject matter of the investigations may request a public hearing with the Director of OTAA at the U.S. Department of Labor (DOL) in Washington, D.C. provided such request if filed in writing with the Director of OTAA not later than October 25, 1999.

Also, interested persons are invited to submit written comments regarding the subject matter of the petitions to the Director of OTTA at the address shown below not later than October 25, 1999.

Petitions filed with the Governors are available for inspection at the Office of the Director, OTAA, ETA, DOL, Room C–4318, 200 Constitution Avenue, NW, Washington, DC 20210.

Signed at Washington, DC this 4th day of October, 1999.

Grant D. Beale,

Program Manager, Office of Trade Adjustment Assistance.

Appendix

Subject firm	Location	Date received at Governor's Office	Petition No.	Articles produced
Blount (Co.)	Spencer, WI	08/16/1999	NAFTA–3,362	Hydraulic cylidners.
Amron L.L.C. (Wkrs)	Waukesha, WI	08/16/1999	NAFTA–3,363	Air bags
Dura Automotive Systems (Co.)	Spring Lake,MI	08/11/1999	NAFTA–3,364	Spare Tire Carriers.
Wellman (UNITE)	Johnsonville, SC	08/11/1999	NAFTA–3,365	Wool.
Tandycrafts (Co.)	Ft. Worth, TX	08/20/1999	NAFTA–3,366	Leather goods.
Jennings Manufacturing (Co.)	Jennings, LA	08/17/1999	NAFTA–3,367	Men's dress slacks.
American Meter (IUE)	Erie, PA	08/19/1999	NAFTA–3,368	Machining of parts for meters.
Superior Essex—Essex Group (USA).	Pauline, KS	08/19/1999	NAFTA–3,369	Finished copper rod.

Subject firm	Location	Date received at Governor's Office	Petition No.	Articles produced
Fahnos Apparel (Co.)	El Paso, TX	08/18/1999	NAFTA–3,370	Jeans, skirts and shirts.
Liz Claiborne (UNITE)	El Paso, TX	08/18/1999	NAFTA–3,371	Technical inspection.
Muskin Leisure Products (IUE)	Wilkes-Barre, PA	08/17/1999	NAFTA–3,372	Above ground swimming pools, etc.
Foremost Mobile Drilling (Wkrs)	Indianapolis, IN	08/17/1999	NAFTA–3,373	Earth boring equipment.
High View Church Farm—Jolly Farmer (Wkrs).	Lempster, NH	08/11/1999	NAFTA–3,374	Greenhouse.
Brubaker Tool (USWA)	Millersburg, PA	08/19/1999	NAFTA–3,375	Cutting tools, taps and end mills.
Darex (Wkrs)	Ashland, OR	08/20/1999	NAFTA–3,376	Drill sharpeners.
General Electric (IUE)	Tell City, IN	08/16/1999	NAFTA–3,377	Motor parts.
Xerox Corporation (Wkrs)	La Palma, CA	08/23/1999	NAFTA–3,378	Telephone customer services.
Sun Country (Wkrs)	Albuquerque, NM	08/10/1999	NAFTA–3,379	Jet engine parts.
Pleasant Hill (Wkrs)	Adair, OK	08/23/1999	NAFTA–3,380	Men's and women's casual jackets.
Pleasant Hill (UFCW)	Baxter Springs, KA	08/21/1999	NAFTA–3,381	Men's and women's casual jackets.
Durkopp Adler American (Co.)	Norcross, GA	08/23/1999	NAFTA–3,382	Sewing equipment replacement parts.
Glenoit (Co.)	Jacksboro, TN	08/23/1999	NAFTA–3,383	Silver knit pile fabric.
MK Contract Service	El Paso, TX	08/24/1999	NAFTA–3,385	Cutting.
Dyersburg (Co.)	Elizabethtown, NC	08/24/1999	NAFTA–3,386	Knit fabric.
Garan (Wkrs)	Adamsville, TN	08/12/1999	NAFTA–3,387	Girls and boys shirts.
Deerlodge Apparel (Wkrs)	Deerlodge, TN	08/24/1999	NAFTA–3,388	Ladies apparel.
BHP Minerals (Wkrs)	Reno, NV	08/27/1999	NAFTA–3,389	Mineral and ore sample analysis.
Rama Group—Charm Graphics (Wkrs).	Checktowaga, NY	08/18/1999	NAFTA–3,390	Newspaper inserts and printed ads.
Marion Mills (Wkrs)	Marion, NC	08/25/1999	NAFTA–3,391	Textile woven cloth.
Rexam Medical Packaging (Wkrs).	Madison, WI	08/24/1999	NAFTA–3,392	preform bags.
Turnkey International—Monitor Division.	Durham, NC	08/25/1999	NAFTA–3,393	
Bard Access Systems Division (Co.).	Salt Lake City, UT	07/09/1999	NAFTA–3,394	Medical catheters.
Ikon Office Solutions (Wkrs)	Jefferson City, MO	08/24/1999	NAFTA–3,395	Copy machines, sorters and document feeder.
West Texas Drilling Fluids (Wkrs).	Midland, TX	08/24/1999	NAFTA–3,396	Oil and gas.
L.B. Russell Chemicals (Co.)	Piscataway, NJ	08/30/1999	NAFTA–3,397	Photographic chemicial solutions.
Dor-O-Matic—Ingersoll Rand (Wkrs).	Harwood, IL	08/27/1999	NAFTA–3,398	Hardware.
John E. Fox (Wkrs)	El Paso, TX	08/24/1999	NAFTA–3,399	Sewing and cutting machine distributors.
Ratholes (Co.)	Snyder, TX	08/17/1999	NAFTA–3,400	Drilling for crude oil.
Hunter Sadler (Co.)	Tupelo, MS	08/19/1999	NAFTA–3,401	Men's suits.
Van Leer (Wkrs)	Jersey City, NJ	08/20/1999	NAFTA–3,402	Chocolate products.
CTI Ancor (Wkrs)	Greenbay, WI	08/30/1999	NAFTA–3,403	Poly crete unicells.
Thomas and Betts (Co.)	Ken, WA	08/30/1999	NAFTA–3,404	Megaflex product.
Lapine Forestry Services (Co.)	La Pine, OR	08/25/1999	NAFTA–3,405	Post and poles.
Funtime Sportswear (Wkrs)	Moscow, PA	08/30/1999	NAFTA–3,406	Sports bars and shorts.
General Electric (IUE)	Tell City, IN	08/26/1999	NAFTA–3,407	Induction motors.
L.D. McFarland (Wkrs)	Sandpoint, ID	08/23/1999	NAFTA–3,408	Cedar poles.
AMP, Inc (Wkrs)	Glen Rock, PA	08/31/1999	NAFTA–3,409	Thermo Plastics.
Ray Ban Sun Optics (Comp)	Rochester, NY	08/31/1999	NAFTA–3,410	Sunglasses.
Dresser Equipment Group (UAW).	Connersville, IN	08/31/1999	NAFTA–3,411	Rotary blower.
Doyon Universal Services, Inc (Wkrs).	Anchorage, AK	08/30/1999	NAFTA–3,412	Oil Drilling.
Louisiana Pacific (Wrks)	Sandpoint, ID	08/31/1999	NAFTA–3,413	Dimension lumber.
Ketchikan Pulp Co. (Wrks)	Ketchikan, AK	08/31/1999	NAFTA–3,414	Lumber.
AMP, Inc (Wrks)	Middletown, PA	09/02/1999	NAFTA–3,415	Fiber Optic Connectors.
Diversified Trucking (Comp)	Opelika, AL	09/02/1999	NAFTA–3,416	Trucking Service.
Woodward and Dickerson (Wrks).	Salem, OR	09/01/1999	NAFTA–3,417	Door and Window Components.
F.G. Montabert Co.	Midland Park, NJ	08/16/1999	NAFTA–3,418	Woven Labels for Clothing.
Milco Industries, Inc (TGWA)	Bloomsburg, PA	09/07/1999	NAFTA–3,419	Ladies' intimate apparel.
Millennium Textiles (Wrks)	Buchanan, GA	09/07/1999	NAFTA–3,420	Linens, Tableclothes, Napkins.
UNITOG Co	Warrensburg, MO	06/16/1999	NAFTA–3,421	Uniforms.
Crescent/US Mat, LLC (KCRSC)	Seattle, WA	08/31/1999	NAFTA–3,422	Matboards for picture frames.
Trinity Industries, Inc	Greenville, PA	09/13/1999	NAFTA–3,423	Rail Road Cars, Grain Cars.
Oremet-Wah Chang (Wrks)	Albany, OR	09/07/1999	NAFTA–3,424	Stainless Steel Products.
Cooper Cameron (Wrks)	Ville Platte, LA	09/13/1999	NAFTA–3,425	Oil Field Equipment.
Kinetic Concepts, Inc (Wrks)	San Antonio, TX	09/13/1999	NAFTA–3,426	High Tech Products.
Fleetwood Shirt Corp	Fleetwood, PA	09/07/1999	NAFTA–3,427	Men's Dress and Sport Shirts.
S and B Engineers and Construction (Wrks).	Odessa, TX	09/13/1999	NAFTA–3,428	Petrochemical plants & refineries.

Subject firm	Location	Date received at Governor's Office	Petition No.	Articles produced
Cooper Industries, Inc	Syracuse, NY	09/09/1999	NAFTA–3,429	Commercial and Industrial Fittings.
Diesel Recon (Co.)	Santa Fe Springs, CA	09/04/1999	NAFTA–3,430	Diesel engines components.
John Crane, Inc (Comp)	Crystal Falls, MI	08/18/1999	NAFTA–3,431	Automotive Seals.
Amco Convertible Fabrics (Comp).	Adrian, MI	09/08/1999	NAFTA–3,432	Automobile Convertible Top Fabrics.
Dura Convertible Systems, Inc	Adrian, MI	09/03/1999	NAFTA–3,433	Automobile Assembly Operations.
TRW, Inc (Wrks)	Washington, MI	09/08/1999	NAFTA–3,434	Module Housing Stampings.
ITW (Comp)	Arlington, TX	09/13/1999	NAFTA–3,435	Packaging Tubes and Tape.
Sarah's Attic (Wrks)	Chesaning, MI	08/24/1999	NAFTA–3,436	Figurines.
North American Refractories Co	Curwensville, PA	09/13/1999	NAFTA–3,437	Refractories.
Ross Mould, Inc (Comp)	Washington, PA	09/14/1999	NAFTA–3,438	Moulds, Blanks for Glass Containers.
General Assembly Corp (Wrks)	El Paso, TX	09/14/1999	NAFTA–3,439	Cut Wire to Mfg Wire Harnesses.
Rio Grande Cutters (Wrks)	El Paso, TX	09/14/1999	NAFTA–3,440	Cut Jeans.
Carmet Co (Comp)	Bad Axe, MI	09/20/1999	NAFTA–3,441	Tungston Carbide for Metals.
Unitog Co	Warsaw, MO	09/20/1999	NAFTA–3,442	Uniforms.
Ametek, Inc. (Comp)	Ambridge, OH	09/20/1999	NAFTA–3,443	Electric Motors.
Jones and Vining, Inc	Troy, MI	09/20/1999	NAFTA–3,444	Shoes.
Grant City Manufacturing (Comp).	Grant City, MO	09/20/1999	NAFTA–3,445	Caps.
Iron Horse Productions, Inc (Comp).	Port Huron, MI	09/20/1999	NAFTA–3,446	Wheelchairs and Accessories.
Grand Rapids Die Cast	Grand Rapids, MI	09/15/1999	NAFTA–3,447	Plated Die Cast Plumbing Parts.
Kerr McGee Chemical Corp (Wrkrs).	The Dallas, OR	09/20/1999	NAFTA–3,448	Raw Lumber.
General Instrument (Wrks)	Horsham, PA	09/20/1999	NAFTA–3,449	Broadband Amplifiers.
VF Knitwear, Inc./Bassett-Walker (Comp).	Brookneal, VA	09/14/1999	NAFTA–3,450	Fleece.
NEC Technologies, Inc. (Wrks)	McDonough, GA	09/17/1999	NAFTA–3,451	Computer Monitors.
Kanthal Globar (Comp)	Niagara Falls, NY	09/17/1999	NAFTA–3,452	Axial Leaded Bulk Ceramic Resistors.
Williamson Dickie Mfg (Wrks)	Eagle Pass, TX	09/16/1999	NAFTA–3,453	Material.
Tektronix, Inc (Wrks)	Willsonville, OR	09/15/1999	NAFTA–3,454	Digital Editing Products.
Mexmil Co (The) (Comp)	Everett, WA	09/15/1999	NAFTA–3,455	Blankets for Commercial Aircrafts.
TAB (Wrks)	Turlock, CA	09/13/1999	NAFTA–3,456	Paper File Folders.
Converse, Inc (Comp)	Lumberton, NC	09/10/1999	NAFTA–3,457	Assemblers and Packers of Tennis Shoes.
RAMA Group of Companies (Wkrs).	Cheektowaga, NY	08/18/1999	NAFTA–3,458	Grocery ads.
VF Knitwear (Co.)	Sparta, NC	09/23/1999	NAFTA–3,459	T-shirts.
Prewash and Pressing Services (Co.).	El Paso, TX	09/21/1999	NAFTA–3,460	Stonewash and pres jeans.
Scovill Fasteners (Wkrs)	El Paso, TX	09/22/1999	NAFTA–3,461	Apparel fasteners.
Comptec (Co.)	Custer, WA	09/23/1999	NAFTA–3,462	Telephone keys and key pads.
GKN Sinter Metals (Wkrs)	Van Wert, OH	09/20/1999	NAFTA–3,463	Automotive powdered metal parts.
Standard Motor (Wkrs)	Dyersburg, TN	09/24/1999	NAFTA–3,464	Distribution center.
Chadbourn Curtain (Co.)	Chadbourn, NC	09/21/1999	NAFTA–3,465	Curtains.
Unifi (Wkrs)	Greensboro, NC	09/30/1999	NAFTA–3,466	Yarns.
General Electric (IUE)	Bucyrus, OH	09/23/1999	NAFTA–3,467	Fluorescent lamps.
Quaker Rubber Company (QRC) (Wkrs).	Philadelphia, PA	09/20/1999	NAFTA–3,468	Escalator handrails.
CTI Communications (Wkrs)	Piqua, OH	09/22/1999	NAFTA–3,469	Cellular phones.
Highland Forest Products (Wkrs)	Sweet Home, OR	09/22/1999	NAFTA–3,470	Morel mushrooms.
Topcraft Precision Molders (Wkrs).	Warminster, PA	09/21/1999	NAFTA–3,471	Injection molded plastics.
Seco—Warwick (Wkrs)	Meadville, PA	09/28/1999	NAFTA–3,472	Metal and thermal processing furnaces.
Corpon Processing (Wkrs)	EL Paso, TX	09/27/1999	NAFTA–3,473	Corpon processing.

[FR Doc. 99–26766 Filed 10–13–99; 8:45 am]

BILLING CODE 4510–30–M

DEPARTMENT OF LABOR

Pension and Welfare Benefits Administration

Working Group Studying Issues Surrounding the Trend in the Defined Benefit Plan Market With a Focus on Employer-Sponsored Hybrid Plans, Advisory Council on Employee Welfare and Pension Benefits Plans; Notice of Meeting

Pursuant to the authority contained in section 512 of the Employee Retirement Income Security Act of 1974 (ERISA), 29 U.S.C. 1142, a public meeting by teleconference will be held on October 28, 1999, by the Working Group Studying Issues Surrounding the Trend in the Defined Benefit Plan Market With a Focus on Employer-Sponsored Hybrid Plans of the Advisory Council on Employee Welfare and Pension Benefit Plans.

The purpose of the open meeting by teleconference, which will run from 9:30 a.m. to approximately 11:00 a.m. in the Conference Room N–5677, U.S. Department of Labor Building, Second and Constitution Avenue, NW, Washington, DC 20210, is for Working Group members to review the group's draft report to the Secretary of Labor before it meets again in Washington for its full and final session for the year on November 9.

Members of the public are encouraged to file a written statement pertaining to the topic by submitting 20 copies on or before October 21, 1999, to Sharon Morrissey, Executive Secretary, ERISA Advisory Council, U.S. Department of Labor, Room N–5677, 200 Constitution Avenue, NW, Washington, DC 20210. Individuals or representatives of organizations wishing to address the Working Group should forward their request to the Executive Secretary or telephone (202) 219–8753. Oral presentations will be limited to 10 minutes, but an extended statement may be submitted for the record. Individuals with disabilities, who need special accommodations, should contact Sharon Morrissey by October 21, at the address indicated in this notice.

Organizations or individuals also may submit statements for the record without testifying. Twenty (20) copies of such statements should be sent to the Executive Secretary of the Advisory Council at the above address. Papers will be accepted and included in the record of the meeting if received on or before October 21.

Signed at Washington, DC this 7th day of September 1999.

Richard McGahey,

Assistant Secretary, Pension and Welfare Benefits Administration.

[FR Doc. 99–26768 Filed 10–13–99; 8:45 am]

BILLING CODE 4510–29–M

NATIONAL COMMISSION ON LIBRARIES AND INFORMATION SCIENCE

Sunshine Act Meeting

The U.S. National Commission on Libraries and Information Science (NCLIS) Sunshine Act Meeting:

Date: November 4, 1999.
Time: 12:30 a.m.–5:00 p.m.
Location: Ronald Reagan Building, Room 6.4b, U.S. Customs Service entrance, 14th and Constitution Avenue, NW, Washington, DC.

Matters to be discussed:
Administrative Matters
Status of current programs and projects
Progam plans, FY 2000–01
Executive Committee Report; NCLIS Committee Reports
Discussion, National Forum on Library and Information Services
Update, Library Statistics Program
Update, Sister Libraries: A White House Millennium Council Project
Discussion, National Award for Library Service

Date: November 5, 1999.
Time: 9:00 a.m.–12:00 noon.
Location: 1575 I Street, NW, Washington, DC.
Matters to be discussed: NCLIS/National Museum Services Board Annual Joint Meeting.

For security reasons, the Ronald Reagan Building requires pre-registration for attendance. To attend the meeting on November 4, please notify Barbara Whiteleather no later than November 1, 1999.

To request further information, please contact Barbara Whiteleather. To make special arrangements for persons with disabilities, contact Barbara Whiteleather (202–606–9200; fax 202–606–9203; e-mail <bwhiteleather@nclis.gov>) no later than November 1, 1999.

Dated: October 6, 1999.

Robert S. Willard,

NCLIS Executive Director.

[FR Doc. 99–26879 Filed 10–8–99; 5:00 pm]

BILLING CODE 7527–$$–M

NATIONAL CREDIT UNION ADMINISTRATION

Federal Credit Union Bylaws

AGENCY: National Credit Union Administration (NCUA).

ACTION: Notice of Federal Credit Union Bylaws.

SUMMARY: This notice advises the public of the final changes to the federal credit union (FCU) bylaws. The changes consolidate the two manuals which currently contain the FCU bylaws into one manual and eliminate or modernize several bylaws. This action is necessary because several of the bylaws had become outdated or obsolete.

DATES: The Federal Credit Union Bylaws are effective October 14, 1999.

FOR FURTHER INFORMATION CONTACT: Mary F. Rupp, Staff Attorney, Office of General Counsel, National Credit Union Administration, 1775 Duke Street, Alexandria, Virginia 22314–3428 or telephone: (703) 518–6553.

SUPPLEMENTARY INFORMATION:

Background

On December 17, 1998, the NCUA Board issued a Notice and Request for Comment on proposed Federal Credit Union (FCU) Bylaws. 64 FR 187 (January 4, 1999). The proposed bylaws were drafted after reviewing comments in response to a Request for Comment. 62 FR 11778 (March 13, 1997). Those commenters supported the bylaws being published as a manual rather than a regulation, consolidating the bylaws into one publication, deleting outdated and obsolete bylaws, and not requiring FCUs to adopt the revised bylaws.

The proposal was drafted in accordance with those comments. As a result, the proposed bylaws are more user friendly for FCUs. All of the information is now in one place; plain English is used; provisions that are outdated are deleted; and provisions that are operational or covered in the Accounting Manual or regulations are deleted, unless it was determined that because of their importance they should also be included in the bylaws.

Summary of Comments

The Board received 24 comments in response to its proposal. The seven commenters that specifically comment on the revised format of consolidating the bylaws in one publication applaud the Board's effort to make the bylaws more user friendly. Several commenters also comment favorably on the Board's decision to remove operational issues from the bylaws. Some of those commenters suggest other areas that could be removed because they are operational. These are discussed below. Overall the comments were favorable.

Article by Article Analysis of Comments

Article I, Name—Purposes

Section 2. This provision states the purpose of the credit union is ''to

promote thrift among its members * * * and to create for them a source of credit for provident or productive purposes.'' One commenter suggests changing it to ''provident, productive or business purposes'' because the member business loan rule exempts from its limitations credit unions that are chartered for the purpose of making business loans.

The Board agrees that, if an FCU determines that in compliance with the Federal Credit Union Act (the Act) one of its purposes is to make member business loans, it should be permitted to add this language to its bylaws. 12 U.S.C. 1757a(b)(1). This provision is optional. The final bylaws indicate that FCUs wishing to include the ''business purposes'' language in their bylaws may do so.

Article II, Qualifications for Membership

Sections 2 and 3. These provisions discuss application for membership and withdrawal from membership. Four commenters state that these provisions are operational and should be deleted. One commenter objects to the withdrawal from membership provision on the basis that it is inconsistent with the Federal Credit Union Act which states two grounds for expulsion. 12 U.S.C. 1764(a) and (b). The commenter fails to distinguish between withdrawal and expulsion. One commenter wants the provision expanded to include the criteria for membership in the Chartering Manual.

Although operational, the Board believes that including these provisions in the bylaws offers useful guidance to FCUs and their members without placing any additional burdens on them.

Section 5. This provision was deleted because the ''once a member always a member'' policy is now addressed in the Act. 12 U.S.C. 1759(e)(2). Two commenters suggest that the bylaw be retained with language allowing FCUs to restrict services to members no longer within the field of membership.

The Board agrees that the bylaws are an appropriate place for this provision to be included. The bylaw will repeat the statutory language and note that FCUs that want to restrict services should state the restrictions in this bylaw provision. This provision is now Article II, Section 4.

Article III, Shares of Members

Sections 1 and 3. One commenter likes the proposal's approach of allowing the FCU to fill in the par value amount of a share and the time frame to complete payment of one share.

Section 2. One commenter suggests that the requirement that the ''maximum amount of shares that may be held by any one member shall be established from time to time by resolution of the board'' should say ''may'' instead of ''shall.'' The commenter notes that large FCUs have no need for the limitation. The Act requires the board to set the maximum amount and so, this provision must remain. 12 U.S.C. 1761b(7).

One commenter suggests that the requirement that both owners of a joint account each purchase a share if they both want to be a member should be stated in the bylaw. The Board agrees that the bylaws are the appropriate place to clarify that for joint account holders to both be members, the account must have at least two shares in it. This provision is added as Section 7 of this Article.

Section 4. This section permits transfer from one member to another by ''a written instrument'' and requires the transfer to ''carry dividend credits with it.'' Five commenters state that this provision is confusing because membership shares generally can't be transferred. The intent of this provision is to show that a member can only transfer shares to members and that the shares function like stock in a corporation.

Some commenters note that the requirement that it be written is outdated. The Board agrees and is deleting the ''written'' requirement.

Section 5. This section sets forth the requirements for withdrawing shares from a member's account. Three commenters note that several of these provisions are operational and should be deleted. One of the commenters notes that, although section 5(d) allowing deceased members' accounts to remain open for a period of four years is operational, it should remain because there is no other authority for it. The Board agrees that all of the Section 5 provisions are operational but they provide useful guidance to the FCU and notice to the member and so, the Board will retain them.

Two commenters suggest that the bylaws include a provision for statutory liens because NCUA's proposed rule on statutory liens references a bylaw as authority for a statutory lien. 63 FR 57943 (October 29, 1998). The bylaws do contain a provision for statutory liens. It is proposed section 5(c) which is currently Article III, Section 5(d) of the FCU Bylaws.

Four commenters object to deleting Section 5(f). This provision allows boards to impose fees for excessive share withdrawals. Commenters note that although the Truth in Savings Act (TISA) requires FCUs to disclose fees it does not authorize fees. The Board agrees and will reinstate this provision in the final bylaws as Section 5(e).

Article IV, Meetings of Members

Section 1. This section requires the annual meeting to be held within 100 miles of the office of the credit union. Four commenters suggest adding ''any'' before office to allow FCUs greater flexibility. The Board agrees that since the intent is to allow FCUs the maximum flexibility possible that ''any'' should be placed before office. One commenter suggests that the requirement of an annual meeting be eliminated. This requirement is statutory and cannot be eliminated. 12 U.S.C. 1760.

Section 2. This section states the time frames for notice of annual and special meetings. Under the current bylaws, notice of the annual meeting must be given at least 7 days prior to the annual meeting. The proposal changes the time to at least 30 days but not more than 75 days. Five commenters object to the change. The reasons cited were that there is more flexibility with 7 days and the new time frame may require an additional mailing which would be costly because, in the past, the notice was sent with the quarterly statement. The Board believes that the requirement of at least 30 days notice to the member is not an undue hardship on an FCU and that the notice can still be mailed with the quarterly statement. However, 7 days notice could be an undue hardship on the membership and does not facilitate maximum member participation at the annual meeting. The notice requirements for a special meeting are still only 7 days because there is often a need to act promptly when scheduling a special meeting. However, that same need is not generally associated with the scheduling of the annual meeting.

Section 3. This section states the number of members necessary to request a special meeting. The current bylaws require 25 members or 5%, whichever is greater, not to exceed 200. The proposal only changes the not-to-exceed number from 200 to 500. Three commenters object to the change. It is unclear whether the commenters understood the change since one said a percentage is fairer and two said small credit unions are penalized. All three commenters ignored the fact that the 5% limit still exists. The Board is going to keep the 500 maximum. The intent of the increase is to prevent a small number of members in a very large credit union from requesting a special meeting every time they don't agree with management. The increase has no effect on a small credit union.

Section 4. This section sets forth the order of business at the annual meeting. Two commenters suggest moving the elections to after the report by the supervisory committee and one commenter suggests deleting this provision because it is operational. The Board agrees that this provision is operational, but rather than delete the provision, the order of business will no longer be required, but rather suggested, with the requirement that, whatever order of business an FCU chooses, it must comply with ''Robert's Rules of Order.''

One commenter suggests that proxy voting be allowed. This is prohibited by the Act. 12 U.S.C. 1760.

Article V, Elections

The proposal lists four election options: (1) In person elections with nominating committee and nominations from floor; (2) In person elections with nominating committee and nominations by petition; (3) Ballot boxes or voting machines with nominating committee and nominations by petition; and (4) Electronic device or mail ballot with nominating committee and nominations by petition. One commenter suggests a fifth option that would allow an individual to place himself on the ballot in lieu of nominations from the floor or nomination by petition. The Board rejects this suggestion because it is contrary to standard business practice. One commenter likes the four options and the guidance they offer.

Two commenters suggest nominations from the floor be deleted because they're archaic and one of those commenters also suggests that nominations by petition be deleted. The Board recognizes that very few FCUs still have nominations from the floor but sees no reason to preclude FCUs from conducting their elections in that manner if they choose to.

One commenter opposes FCUs checking a box to select their voting method. The commenter is concerned that an FCU may forget to check a box or check too many boxes. The commenter suggests that all FCUs reprint the bylaws with only the method selected printed. The Board believes that FCUs will take the responsibility of selecting their bylaws seriously and will follow the appropriate instructions. Therefore, FCUs have the option of adopting their bylaws by checking the appropriate boxes or reprinting the bylaws with only the provisions that apply to them.

Two commenters note that the revised bylaws allow a combined ballot and identification form but require the ballot and identification form to be kept in separate places. The commenters are correct that these provisions are inconsistent and so, the requirement that the ballot and identification form be kept in separate places has been deleted.

One commenter objects to the requirement for prepaid postage with the mail and absentee ballots. The Board has required this in the past and will continue to require it. The rationale behind the requirement is to elicit as large of a response as possible. In addition, depending on the type of postage, an FCU is often not required to pay if the prepaid envelope is not returned.

One commenter objects to the requirement that electronic ballots be received 5 calendar days prior to the meeting because other ballots are not handled in the same manner. The commenter is wrong. Mail and absentee ballots have the same requirements. This enables the FCU to tally the votes prior to the annual meeting when the results are announced.

Section 3. Two commenters suggest deleting the order of nominations because they are operational. The Board agrees, but rather than delete the order because it provides guidance to some FCUs, it has replaced ''shall'' with ''may.''

Two commenters suggest adding to the nominating committee's responsibilities the duty to determine that the nominees meet the criteria for the position. The Board does not agree that this requirement should be part of the FCU Bylaws but rather, the board of directors in its discretion could make that a responsibility of the nominating committee.

Article VI, Board of Directors

Section 2. The proposal allows an FCU to limit the number of directors and their immediate family members that can be paid employees of the FCU to 0, 1 or 2. The current bylaws place no limits and the standard amendments allow an FCU to select any number. Two commenters object to the two limitation. They suggest the number be left to the discretion of the FCU. Two other commenters suggest NCUA prohibit any director or their immediate family member from being a paid employee. Although the Board would prefer to see an FCU limit the number of directors and immediate family members that can be paid employees of the FCU, the Board agrees with the commenters that the ultimate decision should be made by the board of directors. The final bylaws allow the FCU to select the number of paid employees that may serve on the board or are relatives of board members but retain the limitation in the proposal that it is not a majority of the board.

Section 4. This provision directs the board to fill any vacancies on the board, credit committee or supervisory committee ''within a reasonable time.'' Four commenters object to ''within a reasonable time.'' Some suggestions were to define ''reasonable time,'' put a time certain in the bylaw or leave it to the board's discretion.

The final bylaw will maintain the ''within a reasonable time requirement.'' This provision allows the board the flexibility to deal with different situations and determine what is reasonable under the circumstances.

Section 5. This section requires one face-to-face board meeting a quarter. Six commenters object to this requirement and two commenters noted their approval. The objectors state that NCUA should allow the board to determine how it wishes to conduct its meetings. The Board agrees that NCUA should not dictate how a board conducts its meetings. However, the Board does believe that it is important for a board to have personal interaction at least once a year, and so, will require one face-to-face meeting a year. The only requirement for the annual face-to-face meeting is that a quorum be physically present. Board members not necessary to obtain a quorum, who wish to participate, may do so by one of the other approved methods.

Two commenters suggest that the bylaws allow telephone and notation voting. The revised bylaws allow audio teleconference meetings which is the same as telephone voting.

Section 6(c). One commenter suggests that this provision be clarified to state that the board is required to charge off uncollectible loans. The Board believes this bylaw is self explanatory and does not need further clarification.

Section 8. This section addresses removal of directors and credit committee members for missing 3 consecutive meetings or 4 meetings in a calendar year. One commenter suggests adding ''unexcused'' before meeting. This is not necessary because the bylaw does not require removal, but says the board may remove.

Article VII, Board Officers, Management Officials and Executive Committee

Section 3. This section provides that the chair presides at all meetings of the board unless suspended by the supervisory committee. The commenter suggests a 2/3 majority of the board also have the power to suspend the chair. The Board does not agree. There is no authority for the board to suspend the chair. There is statutory authority for

the supervisory committee to suspend any board member. 12 U.S.C. 1761d.

Section 4. This section states that the board must approve all individuals who are authorized to sign notes, checks, drafts and other orders of disbursement. The commenter suggests that the board have the authority to delegate approval authority to the Chief Executive Officer. The Board believes that this function should remain within the purview of the board of directors.

Section 6. One commenter objects to the use of the term ''general manager.'' The commenter suggested a more modern term such as, CEO or president. The Addendum to this Article of the bylaws allows an FCU to determine the title and rank of each management official and to use those titles throughout its bylaws. There is no need to modify this provision.

Section 6(c). This section requires the FCU to post in its office in a conspicuous place the FCU's monthly financial statement. Two commenters object to this requirement. One said it should be deleted because it's operational and the other suggested that the FCU may want to post it on the Internet. An FCU may, in addition to posting the monthly financial statement in its office, post it on the Internet but because not everyone has access to the Internet, the Board is going to keep the requirement of posting in the FCU's offices. One commenter likes the increase from 7 to 20 days to prepare the financial statement.

Section 6(f). One commenter recommends changing the language in this section that authorizes the board to ''employ'' to ''the board may designate, appoint or elect.'' The Board prefers the term ''employ'' to the suggested language and notes that the bylaw authorizes the financial officer and not the board as stated by the commenter.

One commenter suggests adding a provision that authorizes the board to appoint a committee of not less than 3 directors to serve at its pleasure. This addition is not necessary because section 10 of this Article allows the board to appoint an executive committee that serves the same function as the commenter has suggested.

One commenter commends NCUA for allowing FCUs to determine the title and rank of each board officer and management official.

Article VIII, Option 1 Credit Committee or Option 2 Loan Officers (No Credit Committee)

Option 1, Section 8 and Option 2, Section 4. These sections require preference be given to smaller loans if all other factors are nearly equal. Two commenters object to this provision because FCUs should be able to make this decision on a case-by-case basis. Although, there is no specific statute or regulation requiring a preference for small loans, one of the purposes of an FCU is ''creating a source of credit for provident or productive purposes.'' 12 U.S.C. 1752(1). Because this provision enables small credit unions to serve more members, the Board is retaining it, but changing the language from ''will'' to ''should'' in recognition that it is voluntary.

Option 1, Section 6 and Option 2, Section 2. Two commenters object to the requirement that the credit committee and loan officers ''endeavor diligently to assist applicants in solving their financial problems.'' Commenters state that the requirement sets a standard that is difficult to quantify or achieve and unnecessary and out of place in the bylaws. Recognizing that one of the purposes of an FCU is to promote thrift among its members, the Board is retaining this provision but changing the language from ''will'' to ''should'' in recognition that it is voluntary. 12 U.S.C. 1752(1).

Article IX, Supervisory Committee

Section 1. This provision states that the supervisory committee shall consist of not less than 3 nor more than the maximum number permitted by the Act. One commenter suggests that it say ''5'' since that's the maximum number permitted by the Act. The Board agrees and has changed the language in the bylaw to ''5.''

Section 4. This section requires the supervisory committee to verify the accounts of all members. One commenter suggests it require the supervisory committee to ''cause the verification.'' The Board agrees and has modified the language so that it is consistent with the Act. 12 U.S.C. 1761d. In addition, the commenter suggested ''all accounts'' may be unnecessary and that a ''representative sampling'' may be more appropriate.

Since NCUA's regulations set forth the specific requirements for the supervisory committee audit and verification, they do not need to be repeated in the bylaws. 12 CFR 701.12.

Section 5. One commenter objects to the requirement that the supervisory committee call a special meeting to vote on the removal of a suspended director. This requirement is statutory. 12 U.S.C. 1761d.

One commenter suggests holding supervisory committee members to the same attendance requirements as directors and credit committee members. Unlike the board of directors and credit committee, there is no requirement that the supervisory committee hold monthly meetings and so, the same attendance requirements are not appropriate.

Article XI, Loans and Lines of Credit to Members

Section 1. The proposal tracks the current FCU bylaws and requires that a loan to a nonnatural person be either share secured or personally guaranteed. Fourteen commenters object to this requirement. The commenters note that loans to nonnatural persons are currently covered in the business loan regulation and that there is no need or justification for additional requirements in the bylaw. The commenters note that because of this bylaw federally-insured state-chartered credit unions have an unfair advantage over FCUs in this area.

The Board agrees that because the requirements for loans to nonnatural persons are set forth in NCUA's regulations there is no justification for placing additional requirements for these loans in the bylaws. 12 CFR part 723. This provision is deleted from the final bylaws.

Section 2. Five commenters state that this section should be eliminated because it repeats the requirement in section 1 that the credit union follow all applicable law and regulations. The Board agrees and has deleted this provision.

Section 3. This section requires members to pay a late charge as determined by the board. One commenter suggests that it be deleted. The Act requires this section to be in the bylaws. 12 U.S.C. 1757(10).

Article XIII, Deposit of Funds

Two commenters object to including this provision in the bylaws because it's operational. One commenter approves of this provision because it grants an FCU the discretion to select the number of days within which to make its deposits. Although this provision is operational, the Board believes it is helpful for smaller credit unions and so, it will remain.

Article XV, Minors

This provision states that shares may be issued in the name of a minor. One commenter states that it should be deleted because it's already in the Act. 12 U.S.C. 1765. The Board thinks this provision is important and should be repeated in the bylaws.

Article XVI, Definitions

Four commenters suggest that the definitions be moved to the front because it's more user friendly. The

Board agrees that the definitions should not be in the middle of the bylaws, but rather than place them in the front where they are a distraction to the reader, the Board has placed them at the end for easy reference.

Section 1(f). One commenter suggests that ''applicable law and regulations'' also include ''state law.'' The Board agrees and has changed the definition to include ''state law.''

Article XVII, General

Section 2. This provision states the requirements for officers, directors, committee members and employees of the FCU to keep member transactions confidential. The provision lists some specific exceptions to the confidentiality requirements. Seven commenters object to this provision as it's currently drafted. It should be noted that Congress is currently considering financial reform legislation that will require NCUA and the other financial institution regulators to issue regulations governing release of financial information. The commenters suggest that rather than list specific exceptions that may become outdated in light of the changing law in this area or may not include all permissible exceptions, the bylaw should prohibit disclosure except when permitted by state or federal law. The Board agrees and has modified the bylaw accordingly.

Section 3. This provision states the authority of the members to remove officers, committee members and directors. Several commenters like the deletion of the authority of members to remove employees. Four commenters suggest that the bylaws either delete the authority of members to remove officers or define the term ''officer.'' The Board agrees that the term ''officer'' should be deleted.

Two commenters suggest that a higher number than 15 be required for a quorum at a special meeting to remove officers and directors. The Board believes that the number required for a quorum for a meeting of the members should be consistent throughout the bylaws and has retained 15.

Section 7. One commenter suggests eliminating the requirement that members keep the FCU informed of their current address. The Board believes that the bylaws are an appropriate place for this requirement.

Section 8. One commenter suggests using the indemnification language from the Ohio indemnification statute. The proposal allows an FCU to indemnify to the extent allowed by state law or the Model Business Corporation Act. The Board sees no reason to limit an FCU to one state's law.

Miscellaneous

Two commenters suggest that the bylaws be redrafted to remove all gender specific references. The Board agrees and has made the appropriate changes throughout the bylaws.

Two commenters suggest that the bylaws contain the requirement that an FCU's organization certificate and field of membership amendments be an appendix to the bylaws. Although Article XVII, Section 5 of the proposal requires that the FCU keep these documents in a place of safekeeping, the Board agrees that these documents should be kept with the bylaws. Section 5 is revised to include this requirement.

Six commenters suggest that the definitions of ''immediate family member'' and ''household'' be included in the bylaws. The commenters note that this is particularly important for FCUs that choose to have more restrictive definitions than those in the regulation. The Board agrees and has added these terms to the definition section of the bylaws.

FCUs Adopting Revised Bylaws

There is some confusion about whether the revised bylaws will be mandatory. Although the proposal stated that ''[b]ecause of the overwhelming opposition to this requirement, FCUs although strongly encouraged to adopt the revised bylaws, are not required to do so and may continue to use their previously approved bylaws,'' a few commenters objected to the revised bylaws being mandatory. 64 FR at 187. The Board reiterates that the revised FCU Bylaws are not mandatory.

An issue that has not been addressed is whether FCUs will be allowed to adopt just part of the revised bylaws. This is particularly important for FCUs that have nonstandard amendments that are not addressed in the revised bylaws. The Board, in an effort to achieve maximum participation by FCUs, will allow them to adopt portions of the revised bylaws, if an FCU finds that adoption of the entire revised bylaws is impracticable. The Board cautions FCUs adopting only a portion of the revised bylaws to use extreme care because they run the risk of having inconsistent or conflicting bylaw provisions.

In addition, although the Act requires FCUs to use the bylaws published by NCUA, FCUs will continue to have the flexibility to request a nonstandard bylaw amendment if the need arises. 12 U.S.C. 1758.

Final Bylaws

The final bylaws are identical to the proposed bylaws unless noted above in the summary of comments. They will be published as a manual entitled Federal Credit Union Bylaws. The document will contain an index that will make it easier to use than the current bylaws that only have an index for the FCU Bylaws and not the Standard Amendments.

By the National Credit Union Administration Board on October 6, 1999.

Becky Baker,

Secretary of the Board.

Bylaws

Federal Credit Union, Charter No. _____ (A corporation chartered under the laws of the United States)

Article I. Name—Purposes

Section 1. The name of this credit union is as stated in section 1 of the charter (approved organization certificate) of this credit union.

Section 2. The purpose of this credit union is to promote thrift among its members by affording them an opportunity to accumulate their savings and to create for them a source of credit for provident or productive purposes. **The credit union may add business as one of its purposes by placing a comma after ''provident'' and inserting ''business.''**

Article II. Qualifications for Membership

Section 1. The field of membership of this credit union is limited to that stated in section 5 of its charter.

Section 2. Applications for membership from persons eligible for membership under section 5 of the charter must be signed by the applicant on forms approved by the board. Upon approval of an application by a majority of the directors, or a majority of the members of a duly authorized executive committee or by a membership officer, and upon subscription to at least one share of this credit union and the payment of the initial installment, and the payment of a uniform entrance fee if required by the board, the applicant is admitted to membership. If a membership application is denied, the reasons must be furnished in writing to the person whose application is denied, upon written request.

Section 3. A member who withdraws all shareholdings or fails to comply with the time requirements in article III, section 3, ceases to be a member. By resolution, the board may require persons readmitted to membership to pay another entrance fee.

Section 4. Once a member becomes a member that person may remain a member until the person or organization chooses to withdraw or is expelled in accordance with the Act. **A credit union that wishes to restrict services to members no longer within the field of membership should specify the restrictions in this section.**

Article III. Shares of Members

Section 1. The par value of each share will be $_____. Subscription to shares are payable at the time of subscription, or in installments of at least $_____ per month.

Section 2. The maximum amount of shares that may be held by any one member will be established from time to time by resolution of the board.

Section 3. A member who fails to complete payment of one share within _____ of admission to membership, or within _____ from the increase in the par value of shares, or a member who reduces the share balance below the par value of one share and does not increase the balance to at least the par value of one share within _____ of the reduction may be terminated from membership.

Section 4. Shares may only be transferred from one member to another by an instrument in a form as the board may prescribe. Such transfer will carry dividend credits with it.

Section 5. Money paid in on shares or installments of shares may be withdrawn as provided in these bylaws or regulation on any day when payment on shares may be made: provided, however, that

(a) The board has the right, at any time, to require members to give, in writing, not more than 60 days notice of intention to withdraw the whole or any part of the amounts paid in by them.

(b) The board may determine that, if shares are paid in under an accumulated payroll deduction plan as prescribed in the Accounting Manual for Federal Credit Unions, they may not be withdrawn until credited to members' accounts.

(c) No member may withdraw any shareholdings below the amount of the member's primary or contingent liability to the credit union if the member is delinquent as a borrower, or if borrowers for whom the member is comaker, endorser, or guarantor are delinquent, without the written approval of the credit committee or loan officer; except that shares issued in an irrevocable trust as provided in section 6 of this article are not subject to restrictions upon withdrawal except as stated in the trust agreement.

(d) The share account of a deceased member (other than one held in joint tenancy with another member) may be continued until the close of the dividend period in which the administration of the deceased's estate is completed, but not to exceed a period of 4 years.

(e) The board will have the right, at any time, to impose a fee for excessive share withdrawals from regular share accounts. The number of withdrawals not subject to a fee and the amount of the fee will be established by board resolution and will be subject to regulations applicable to the advertising and disclosure of terms and conditions on member accounts.

Section 6. Shares may be issued in a revocable or irrevocable trust, subject to the following: When shares are issued in a revocable trust, the settlor must be a member of this credit union in his own right. When shares are issued in an irrevocable trust, either the settlor or the beneficiary must be a member of this credit union. The name of the beneficiary must be stated in both a revocable and irrevocable trust. For purposes of this section, shares issued pursuant to a pension plan authorized by the rules and regulations will be treated as an irrevocable trust unless otherwise indicated in the rules and regulations.

Section 7. Owners of a joint account may both be members of the credit union without opening separate accounts. For joint membership, both owners are required to fulfill all of the membership requirements including each member purchasing and maintaining at least one share in the account.

Article IV. Meetings of Members

Section 1. The annual meeting of the members must be held within the period authorized in the Act, in the county in which any office of the credit union is located or within a radius of 100 miles of such office, at the time and place as the board determines and announces in the notice of the annual meeting.

Section 2. At least 30 but no more than 75 days before the date of any annual meeting or at least 7 days before the date of any special meeting of the members, the secretary must give written notice to each member by in person delivery, or by mailing the written notice to each member at the address that appears on the records of this credit union. Notice of the annual meeting may be given by posting the notice in a conspicuous place in the office of this credit union where it may be read by the members, at least 30 days prior to such meeting, if the annual meeting is to be held during the same month as that of the previous annual meeting and if this credit union maintains an office that is readily accessible to members where regular business hours are maintained. Any meeting of the members, whether annual or special, may be held without prior notice, at any place or time, if all the members entitled to vote, who are not present at the meeting, waive notice in writing, before, during, or after the meeting.

Notice of any special meeting must state the purpose for which it is to be held, and no business other than that related to this purpose may be transacted at the meeting.

Section 3. Special meetings of the members may be called by the chair or the board of directors upon a majority vote, or by the supervisory committee as provided in these bylaws, and may be held at any location permitted for the annual meeting. A special meeting must be called by the chair within 30 days of the receipt of a written request of 25 members or 5% of the members as of the date of the request, whichever number is larger. However, a request of no more than 500 members may be required for such meeting. The notice of a special meeting must be given as provided in section 2 of this article.

Section 4. The suggested order of business at annual meetings of members is—

(a) Ascertainment that a quorum is present.

(b) Reading and approval or correction of the minutes of the last meeting.

(c) Report of directors, if there is one.

(d) Report of the financial officer or the chief management official.

(e) Report of the credit committee, if there is one.

(f) Report of the supervisory committee.

(g) Unfinished business.

(h) New business other than elections.

(i) Elections.

(j) Adjournment.

The order of business must comply with ''Robert's Rules of Order.''

Section 5. Except as otherwise provided, 15 members constitute a quorum at annual or special meetings. If no quorum is present, an adjournment may be taken to a date not fewer than 7 nor more than 14 days thereafter. The members present at any such adjourned meeting will constitute a quorum, regardless of the number of members present. The same notice must be given for the adjourned meeting as is prescribed in section 2 of this article for the original meeting, except that such notice must be given not fewer than 5

days previous to the date of the meeting as fixed in the adjournment.

Article V. Elections

The Credit Union must select one of the four voting options. This may be done by printing the credit union's bylaws with the option selected or retaining this copy and checking the box of the option selected.

☐ Option A1—In-Person Elections; Nominating Committee and Nominations From Floor

Section 1. At least 30 days prior to each annual meeting, the chair will appoint a nominating committee of not fewer than three members. It is the duty of the nominating committee to nominate at least one member for each vacancy, including any unexpired term vacancy, for which elections are being held, and to determine that the members nominated are agreeable to the placing of their names in nomination and will accept office if elected.

Section 2. After the nominations of the nominating committee have been placed before the members, the chair calls for nominations from the floor. When nominations are closed, tellers are appointed by the chair, ballots are distributed, the vote is taken and tallied by the tellers, and the results announced. All elections are determined by plurality vote and will be by ballot except where there is only one nominee for the office.

☐ Option A2—In-Person Elections; Nominating Committee and Nominations by Petition

Section 1. At least 120 days prior to each annual meeting the chair will appoint a nominating committee of not fewer than three members. It is the duty of the nominating committee to nominate at least one member for each vacancy, including any unexpired term vacancy, for which elections are being held, and to determine that the members nominated are agreeable to the placing of their names in nomination and will accept office if elected. The nominating committee files its nominations with the secretary of the credit union at least 90 days prior to the annual meeting, and the secretary notifies in writing all members eligible to vote at least 75 days prior to the annual meeting that nominations for vacancies may also be made by petition signed by 1% of the members with a minimum of 20 and a maximum of 500.

The written notice must indicate that the election will not be conducted by ballot and there will be no nominations from the floor when there is only one nominee for each position to be filled. A brief statement of qualifications and biographical data in a form approved by the board of directors will be included for each nominee submitted by the nominating committee with the written notice to all eligible members. Each nominee by petition must submit a similar statement of qualifications and biographical data with the petition. The written notice must state the closing date for receiving nominations by petition. In all cases, the period for receiving nominations by petition must extend at least 30 days from the date that the petition requirement and the list of nominating committee's nominees are mailed to all members. To be effective, such nominations must be accompanied by a signed certificate from the nominee or nominees stating that they are agreeable to nomination and will serve if elected to office. Such nominations must be filed with the secretary of the credit union at least 40 days prior to the annual meeting and the secretary will ensure that nominations by petition along with those of the nominating committee are posted in a conspicuous place in each credit union office at least 35 days prior to the annual meeting.

Section 2. All persons nominated by either the nominating committee or by petition must be placed before the members. When nominations are closed, tellers are appointed by the chair, ballots are distributed, the vote is taken and tallied by the tellers, and the results announced. All elections are determined by plurality vote and will be by ballot except where there is only one nominee for each position to be filled.

Nominations cannot be made from the floor unless insufficient nominations have been made by the nominating committee or by petition to provide for one nominee for each position to be filled or circumstances prevent the candidacy of the one nominee for a position to be filled. Only those positions without a nominee are subject to nominations from the floor. In the event nominations from the floor are permitted and result in more than one nominee for a position to be filled, when nominations have been closed, tellers are appointed by the chair, ballots are distributed, the vote is taken and tallied by the tellers, and the results announced. When only one member is nominated for each position to be filled, the chair may take a voice vote or declare each nominee elected by general consent or acclamation at the annual meeting.

☐ Option A3—Election by Ballot Boxes or Voting Machine; Nominating Committee and Nomination by Petition

Section 1. At least 120 days prior to each annual meeting, the chair will appoint a nominating committee of not fewer than three members. It is the duty of the nominating committee to nominate at least one member for each vacancy, including any unexpired term vacancy, for which elections are being held, and to determine that the members nominated are agreeable to the placing of their names in nomination and will accept office if elected. The nominating committee files its nominations with the secretary of the credit union at least 90 days prior to the annual meeting, and the secretary notifies in writing all members eligible to vote at least 75 days prior to the annual meeting that nominations for vacancies may also be made by petition signed by 1% of the members with a minimum of 20 and a maximum of 500.

The written notice must indicate that the election will not be conducted by ballot and there will be no nominations from the floor when there is only one nominee for each position to be filled. A brief statement of qualifications and biographical data in a form approved by the board of directors will be included for each nominee submitted by the nominating committee with the written notice to all eligible members. Each nominee by petition must submit a similar statement of qualifications and biographical data with the petition. The written notice must state the closing date for receiving nominations by petition. In all cases, the period for receiving nominations by petition must extend at least 30 days from the date of the petition requirement and the list of nominating committee's nominees are mailed to all members. To be effective, such nominations must be accompanied by a signed certificate from the nominee or nominees stating that they are agreeable to nomination and will serve if elected to office. Such nominations must be filed with the secretary of the credit union at least 40 days prior to the annual meeting and the secretary will ensure that nominations by petition along with those of the nominating committee are posted in a conspicuous place in each credit union office at least 35 days prior to the annual meeting.

Section 2. All elections are determined by plurality vote. The election will be conducted by ballot boxes or voting machines, subject to the following conditions:

(a) The election tellers will be appointed by the board of directors;

(b) If sufficient nominations are made by the nominating committee or by petition to provide more than one nominee for any position to be filled, the secretary, at least 10 days prior to the annual meeting, will cause ballot boxes and printed ballots, or voting machines, to be placed in conspicuous locations, as determined by the board of directors with the names of the candidates posted near the boxes or voting machines. The name of each candidate will be followed by a brief statement of qualifications and biographical data in a form approved by the board of directors;

(c) After the members have been given 24 hours to vote at conspicuous locations as determined by the board of directors, the ballot boxes or voting machines will be opened, the vote tallied by the tellers, the tallies placed in the ballot boxes, and the ballot boxes resealed. The tellers are responsible at all times for the ballot boxes or voting machines and the integrity of the vote. A record must be kept of all persons voting and the tellers must assure themselves that each person so voting is entitled to vote; and

(d) The ballot boxes will be taken to the annual meeting by the tellers. At the annual meeting, printed ballots will be distributed to those in attendance who have not voted and their votes will be deposited in the ballot boxes placed by the tellers, before the beginning of the meeting, in conspicuous locations with the names of the candidates posted near them. After such members have been given an opportunity to vote at the annual meeting, balloting will be closed, the ballot boxes opened, the vote tallied by the tellers and added to the previous count, and the chair will announce the result of the vote.

☐ Option A4—Election by Electronic Device (Including But Not Limited to Telephone and Electronic Mail) or Mail Ballot; Nominating Committee and Nominations by Petition

Section 1. At least 120 days prior to each annual meeting, the chair will appoint a nominating committee of not fewer than three members. It is the duty of the nominating committee to nominate at least one member for each vacancy, including any unexpired term vacancy, for which elections are being held, and to determine that the members nominated are agreeable to the placing of their names in nomination and will accept office if elected. The nominating committee files its nominations with the secretary of the credit union at least 90 days prior to the annual meeting, and the secretary notifies in writing all members eligible to vote at least 75 days prior to the annual meeting that nominations for vacancies may also be made by petition signed by 1% of the members with a minimum of 20 and a maximum of 500.

The written notice must indicate that the election will not be conducted by ballot and there will be no nominations from the floor when there is only one nominee for each position to be filled. A brief statement of qualifications and biographical data in a form approved by the board of directors will be included for each nominee submitted by the nominating committee with the written notice to all eligible members. Each nominee by petition must submit a similar statement of qualifications and biographical data with the petition. The written notice must state the closing date for receiving nominations by petition. In all cases, the period for receiving nominations by petition must extend at least 30 days from the date of the petition requirement and the list of nominating committee's nominees are mailed to all members. To be effective, such nominations must be accompanied by a signed certificate from the nominee or nominees stating that they are agreeable to nomination and will serve if elected to office. Such nominations must be filed with the secretary of the credit union at least 40 days prior to the annual meeting and the secretary will ensure that nominations by petition along with those of the nominating committee are posted in a conspicuous place in each credit union office at least 35 days prior to the annual meeting.

Section 2. All elections will be by electronic device or mail ballot, subject to the following conditions:

(a) The election tellers will be appointed by the board of directors;

(b) If sufficient nominations are made by the nominating committee or by petition to provide more than one nominee for any position to be filled, the secretary, at least 30 days prior to the annual meeting, will cause either a printed ballot or notice of ballot to be mailed to all members eligible to vote;

(c) If the credit union is conducting its elections electronically, the secretary will cause the following materials to be mailed to each eligible voter and the following procedures will be followed:

(1) One notice of balloting stating the names of the candidates for the board of directors and the candidates for other separately identified offices or committees. The name of each candidate must be followed by a brief statement of qualifications and biographical data in a form approved by the board of directors.

(2) One instruction sheet stating specific instructions for the electronic election procedure, including how to access and use the system, and the period of time in which votes will be taken. The instruction will state that members without the requisite electronic device necessary to vote on the system may vote by mail ballot upon written or telephone request and specify the date the request must be received by the credit union.

(3) It is the duty of the tellers of election to verify, or cause to be verified the name of the voter and the credit union account number as they are registered in the electronic balloting system. It is the duty of the teller to test the integrity of the balloting system at regular intervals during the election period.

(4) Ballots must be received no later than midnight 5 calendar days prior to the annual meeting.

(5) Voting will be closed at the midnight deadline specified in subsection (4) hereof and the vote will be tallied by the tellers. The result must be verified at the annual meeting and the chair will make the result of the vote public at the annual meeting.

(6) In the event of malfunction of the electronic balloting system, the board of directors may in its discretion order elections be held by mail ballot only. Such mail ballots must conform to section 2(d) of this Article and must be mailed to all eligible members 30 days prior to the annual meeting. The board may make reasonable adjustments to the voting time frames above, or postpone the annual meeting when necessary, to complete the elections prior to the annual meeting.

(d) If the credit union is conducting its election by mail ballot, the secretary will cause the following materials to be mailed to each member and the following procedures will be followed:

(1) One ballot, clearly identified as such, on which the names of the candidates for the board of directors and the candidates for other separately identified offices or committees are printed in order as determined by the draw of lots. The name of each candidate will be followed by a brief statement of qualifications and biographical data in a form approved by the board of directors;

(2) One ballot envelope clearly marked with instructions that the completed ballot must be placed in that envelope and sealed;

(3) One identification form to be completed so as to include the name, address, signature and credit union account number of the voter;

(4) One mailing envelope in which the voter, pursuant to instructions provided with the mailing envelope,

must insert the sealed ballot envelope and the identification form, and which must have postage prepaid and be preaddressed for return to the tellers;

(5) When properly designed, one form can be printed that represents a combined ballot and identification form, and postage prepaid and preaddressed return envelope;

(6) It is the duty of the tellers to verify, or cause to be verified, the name and credit union account number of the voter as appearing on the identification form; to place the verified identification form and the sealed ballot envelope in a place of safekeeping pending the count of the vote; in the case of a questionable or challenged identification form, to retain the identification form and sealed ballot envelope together until the verification or challenge has been resolved;

(7) Ballots mailed to the tellers must be received by the tellers no later than midnight 5 days prior to the date of the annual meeting;

(8) Voting will be closed at the midnight deadline specified in subsection (7) hereof and the vote will be tallied by the tellers. The result will be verified at the annual meeting and the chair will make the result of the vote public at the annual meeting.

Section 3. Nominations may be in the following order:

(a) Nominations for directors.

(b) Nominations for credit committee members, if applicable. Elections may be by separate ballots following the same order as the above nominations or, if preferred, may be by one ballot for all offices.

Section 4. Members cannot vote by proxy, but a member other than a natural person may vote through an agent designated in writing for the purpose. A trustee, or other person acting in a representative capacity, is not, as such, entitled to vote.

Section 5. Irrespective of the number of shares, no member has more than one vote.

Section 6. The names and addresses of members of the board, board officers, executive committee, and members of the credit committee, if applicable, and supervisory committees must be forwarded to the Administration in accordance with the Act and regulations in the manner as may be required by the Administration.

Section 7. The board may establish by resolution a minimum age, not greater than 18 years of age, as a qualification for eligibility to vote at meetings of the members, or to hold elective or appointive office, or both.

The Credit Union may select the absentee ballot provision in conjunction with the voting procedure it has selected. This may be done by printing the credit union's bylaws with this provision or by retaining this copy and checking the box.

☐ Section 8 The board of directors may authorize the use of absentee ballots in conjunction with the other procedures authorized in this article, subject to the following conditions:

(a) The election tellers will be appointed by the board of directors;

(b) If sufficient nominations are made by the nominating committee or by petition to provide more than one nominee for any position to be filled, the secretary, at least 30 days prior to the annual meeting, will cause printed ballots to be mailed to all members of the credit union who are eligible to vote and who have submitted a written request for an absentee ballot;

(c) The secretary will cause the following materials to be mailed to each such eligible voter who has submitted a written request for an absentee ballot:

(1) One ballot, clearly identified as such, on which the names of the candidates for the board of directors and the candidates for other separately identified offices or committees are printed in order as determined by the draw of the lots. The name of each candidate will be followed by a brief statement of qualifications and biographical data in a form approved by the board of directors;

(2) One ballot envelope clearly marked with instructions that the completed ballot must be placed in that envelope and sealed;

(3) One identification form to be completed so as to include the name, address, signature and credit union account number of the voter;

(4) One mailing envelope in which the voter, pursuant to instructions provided with the envelope, must insert the sealed ballot envelope and the identification form, and which must have postage prepaid and be preaddressed for return to the tellers;

(5) When properly designed, one form can be printed that represents a combined ballot and identification form, and postage prepaid and preaddressed return envelope;

(d) It is the duty of the tellers of election to verify, or cause to be verified, the name and credit union account number of the voter as appearing on the identification form; to place the verified identification and the sealed ballot envelope in a place of safekeeping pending the count of the vote; in the case of a questionable or challenged identification form, to retain the identification form and the sealed ballot envelope together until the verification or challenge has been resolved; and in the event that more than one voting procedure is used, to verify that no eligible voter has voted more than one time;

(e) Ballots mailed to the tellers pursuant to subsection (b) hereof, must be received by the tellers no later than midnight 5 days prior to the date of the annual meeting; and

(f) After the expiration of the period of time specified in the preceding subsection (e), the voting by absentee ballot will be closed and absentee ballots deposited in the ballot boxes to be taken to the annual meeting or included in a precount in accordance with procedures specified in Article V, Section 2.

Article VI. Board of Directors

Section 1. The board consists of _____ members, all of whom must be members of this credit union. The number of directors may be changed to an odd number not fewer than 5 nor more than 15 by resolution of the board. No reduction in the number of directors may be made unless corresponding vacancies exist as a result of deaths, resignations, expiration of terms of office, or other actions provided by these bylaws. A copy of the resolution of the board covering any increase or decrease in the number of directors must be filed with the official copy of the bylaws of this credit union.

Section 2. _____ (Fill in the number) directors or committee members may be a paid employee of the credit union. _____ (Fill in the number) immediate family members of a director or committee member may be a paid employee of the credit union. In no case may employees and family members constitute a majority of the board. The board may appoint a management official who _____ (may or may not) be a member of the board and one or more assistant management officials who _____ (may or may not) be a member of the board. If the management official or assistant management official is permitted to serve on the board, he or she may not serve as the chair.

Section 3. Regular terms of office for directors must be for periods of either 2 or 3 years as the board determines: provided, however, that all regular terms must be for the same number of years and until the election and qualification of successors. The regular terms must be fixed at the beginning, or upon any increase or decrease in the number of directors, that approximately an equal number of regular terms must expire at each annual meeting.

Section 4. Any vacancy on the board, credit committee, if applicable, or supervisory committee will be filled within a reasonable time by vote of a majority of the directors then holding office. Directors and credit committee members so appointed will hold office only until the next annual meeting, at which any unexpired terms will be filled by vote of the members, and until the qualification of their successors. Members of the supervisory committee so appointed will hold office until the first regular meeting of the board following the next annual meeting of members, at which the regular term expires, and until the appointment and qualification of their successors.

Section 5. A regular meeting of the board must be held each month at the time and place fixed by resolution of the board. One regular meeting each calendar year must be conducted in person. If a quorum is present in person for the annual in person meeting, the remaining board members may participate using audio or video teleconference methods. The other regular meetings may be conducted using audio or video teleconference methods. The chair, or in the chair's absence the ranking vice chair, may call a special meeting of the board at any time and must do so upon written request of a majority of the directors then holding office. Unless the board prescribes otherwise, the chair, or in the chair's absence the ranking vice chair, will fix the time and place of special meetings. Notice of all meetings will be given in such manner as the board may from time to time by resolution prescribe. Special meetings may be conducted using audio or video teleconference methods.

Section 6. The board has the general direction and control of the affairs of this credit union and is responsible for performing all the duties customarily performed by boards of directors. This includes but is not limited to the following:

(a) Directing the affairs of the credit union in accordance with the Act, these bylaws, the rules and regulations and sound business practices.

(b) Establishing programs to achieve the purposes of this credit union as stated in Article 1, section 2, of these bylaws.

(c) Establishing a loan collection program and authorizing the chargeoff of uncollectible loans.

(d) Determining that all persons appointed or elected by this credit union to any position requiring the receipt, payment or custody of money or other property of this credit union, or in its custody or control as collateral or otherwise, are properly bonded in accordance with the Act and regulations.

(e) Performing additional acts and exercising additional powers as may be required or authorized by applicable law.

If the credit union has an elected credit committee, you do not need to check a box. If the credit union has no credit committee check Option 1 and if it has an appointed credit committee check Option 2.

☐ Option 1—No Credit Committee

(f) Reviewing denied loan applications of members who file written requests for such review.

(g) Appointing one or more loan officers and delegating to those officers the power to approve or disapprove loans, lines of credit or advances from lines of credit.

(h) In its discretion, appointing a loan review committee to review loan denials and delegating to the committee the power to overturn denials of loan applications. The committee will function as a mid-level appeal committee for the board. Any denial of a loan by the committee must be reviewed by the board upon written request of the member. The committee must consist of three members and the regular term of office of the committee member will be for two years. Not more than one member of the committee may be appointed as a loan officer.

☐ Option 2—Appointed Credit Committee.

(f) Appointing an odd number of credit committee members as provided in Article VIII of these bylaws.

Section 7. A majority of the number of directors, including any vacant positions, constitutes a quorum for the transaction of business at any meeting; but fewer than a quorum may adjourn from time to time until a quorum is in attendance.

Section 8. If a director or a credit committee member, if applicable, fails to attend regular meetings of the board or credit committee, respectively, for 3 consecutive months, or 4 meetings within a calendar year, or otherwise fails to perform any of the duties as a director or a credit committee member, the office may be declared vacant by the board and the vacancy filled as provided in the bylaws. The board may remove any board officer from office for failure to perform the duties thereof, after giving the officer reasonable notice and opportunity to be heard.

When any board officer, membership officer, executive committee member or investment committee member is absent, disqualified, or otherwise unable to perform the duties of the office, the board may by resolution designate another member of this credit union to fill the position temporarily. The board may also, by resolution, designate another member or members of this credit union to act on the credit committee when necessary in order to obtain a quorum.

Section 9. Any member of the supervisory committee may be suspended by a majority vote of the board of directors. The members of this credit union will decide, at a special meeting held not fewer than 7 nor more than 14 days after any such suspension, whether the suspended committee member will be removed from or restored to the supervisory committee.

Article VII. Board Officers, Management Officials and Executive Committee

Section 1. The board officers of this credit union are comprised of a chair, one or more vice chairs, a financial officer, and a secretary, all of whom are elected by the board and from their number. The board determines the title and rank of each board officer and records them in the addendum to this Article. One board officer, the _____, may be compensated for services as determined by the board. If more than one vice chair is elected, the board determines their rank as first vice chair, second vice chair, and so on. The offices of the financial officer and secretary may be held by the same person. Unless removed as provided in these bylaws, the board officers elected at the first meeting of the board hold office until the first meeting of the board following the first annual meeting of the members and until the election and qualification of their respective successors.

Section 2. Board officers elected at the meeting of the board next following the annual meeting of the members, which must be held not later than 7 days after the annual meeting, hold office for a term of 1 year and until the election and qualification of their respective successors: provided, however, that any person elected to fill a vacancy caused by the death, resignation, or removal of an officer is elected by the board to serve only for the unexpired term of such officer and until a successor is duly elected and qualified.

Section 3. The chair presides at all meetings of the members and at all meetings of the board, unless disqualified through suspension by the supervisory committee. The chair also performs such other duties as customarily appertain to the office of

the chair or as may be directed to perform by resolution of the board not inconsistent with the Act and regulations and these bylaws.

Section 4. The board must approve all individuals who are authorized to sign all notes of this credit union and all checks, drafts and other orders for disbursement of credit union funds.

Section 5. The ranking vice chair has and may exercise all the powers, authority, and duties of the chair during the chair's absence or inability to act.

Section 6. The financial officer manages this credit union under the control and direction of the board unless the board has appointed a management official to act as general manager. Subject to such limitations, controls and delegations as may be imposed by the board, the financial officer will:

(a) Have custody of all funds, securities, valuable papers and other assets of this credit union.

(b) Provide and maintain full and complete records of all the assets and liabilities of this credit union in accordance with forms and procedures prescribed in the Accounting Manual for Federal Credit Unions or otherwise approved by the Administration.

(c) Within 20 days after the close of each month, ensure that a financial statement showing the condition of this credit union as of the end of the month, including a summary of delinquent loans is prepared and submitted to the board and post a copy of such statement in a conspicuous place in the office of the credit union where it will remain until replaced by the financial statement for the next succeeding month.

(d) Ensure that such financial and other reports as the Administration may require are prepared and sent.

(e) Within standards and limitations prescribed by the board, employ tellers, clerks, bookkeepers, and other office employees, and have the power to remove such employees.

(f) Perform such other duties as customarily appertain to the office of the financial officer or as may be directed to perform by resolution of the board not inconsistent with the Act, regulations and these bylaws.

The board may employ one or more assistant financial officers, none of whom may also hold office as chair or vice chair, and may authorize them, under the direction of the financial officer, to perform any of the duties devolving on the financial officer, including the signing of checks. When designated by the board, any assistant financial officer may also act as financial officer during the financial officer's temporary absence or temporary inability to act.

Section 7. The board may appoint a management official who is under the direction and control of the board or of the financial officer as determined by the board. The management official may be assigned any or all of the responsibilities of the financial officer described in section 6 of this article. The board will determine the title and rank of each management official and record them in the addendum to this article. The board may employ one or more assistant management officials. The board may authorize assistant management officials under the direction of the management official, to perform any of the duties devolving on the management official, including the signing of checks. When designated by the board, any assistant management official may also act as management official during the management official's temporary absence or temporary inability to act.

Section 8. The board employs, fixes the compensation, and prescribes the duties of such employees as may in the discretion of the board be necessary, and has the power to remove such employees, unless it has delegated these powers to the financial officer or management official. Neither the board, the financial officer, nor the management official has the power or duty to employ, prescribe the duties of, or remove necessary clerical and auditing assistance employed or utilized by the supervisory committee and, if there is a credit committee, the power or duty to employ, prescribe the duties of, or remove any loan officer appointed by the credit committee.

Section 9. The secretary prepares and maintains full and correct records of all meetings of the members and of the board, which records will be prepared within 7 days after the respective meetings. The secretary must promptly inform the Administration in writing of any change in the address of the office of this credit union or the location of its principal records. The secretary will give or cause to be given, in the manner prescribed in these bylaws, proper notice of all meetings of the members, and perform such other duties as may be directed to perform by resolution of the board not inconsistent with the Act, regulations and these bylaws. The board may employ one or more assistant secretaries, none of whom may also hold office as chair, vice chair, or financial officer, and may authorize them under direction of the secretary to perform any of the duties devolving on the secretary.

Section 10. The board may appoint an executive committee of not fewer than three directors to serve at its pleasure, to act for it with respect to specifically delegated functions authorized by the Act and regulations. The board may also authorize such executive committee or a membership officer(s) appointed by the board from the membership other than a board member paid as an officer, the financial officer, any assistant to the paid officer of the board or to the financial officer or any loan officer, to serve at its pleasure to approve applications for membership under such conditions as the board and these bylaws may prescribe. No executive committee member or membership officer may be compensated as such.

Section 11. The board may appoint an investment committee composed of not less than two, to serve at its pleasure to have charge of making investments under rules and procedures established by the board. No member of the investment committee may be compensated as such.

Addendum: The board must list the positions of the board officers and management officials of this credit union. They are as follows:

Select Option 1 if the credit union has a credit committee and Option 2 if it does not have a credit committee.

☐ Option 1—Article VIII. Credit Committee

Section 1. The credit committee consists of _____ members. All the members of the credit committee must be members of this credit union. The number of members of the credit committee must be an odd number and may be changed to not fewer than 3 nor more than 7 by resolution of the board. No reduction in the number of members may be made unless corresponding vacancies exist as a result of deaths, resignations, expiration of terms of office, or other actions provided by these bylaws. A copy of the resolution of the board covering any increase or decrease in the number of committee members must be filed with the official copy of the bylaws of this credit union.

Section 2. Regular terms of office for elected credit committee members are for periods of either 2 or 3 years as the board determines: provided, however, that all regular terms are for the same number of years and until the election and qualification of successors. The regular terms are fixed at the beginning, or upon any increase or decrease in the number of committee members, that approximately an equal number of regular terms expire at each annual meeting.

Regular terms of office for appointed credit committee members are for periods as determined by the board and as noted in the board's minutes.

Section 3. The credit committee chooses from their number a chair and a secretary. The secretary of the committee prepares and maintains full and correct records of all actions taken by it, and such records must be prepared within 3 days after the action. The offices of the chair and secretary may be held by the same person.

Section 4. The credit committee may, by majority vote of its members, appoint one or more loan officers to serve at its pleasure, and delegate to them the power to approve application for loans or lines of credit, share withdrawals, releases and substitutions of security, within limits specified by the committee and within limits of applicable law and regulations. Not more than one member of the committee may be appointed as a loan officer. Each loan officer must furnish to the committee a record of each approved or not approved transaction within 7 days of the date of the filing of the application or request, and such record becomes a part of the records of the committee. All applications or requests not approved by a loan officer must be acted upon by the committee. No individual may disburse funds of this credit union for any application or share withdrawal which the individual has approved as a loan officer.

Section 5. The credit committee holds meetings as the business of this credit union may require, and not less frequently than once a month. Notice of such meetings will be given to members of the committee in a manner as the committee may from time to time, by resolution, prescribe.

Section 6. The credit committee or loan officer must for each loan or line of credit inquire into the character and financial condition of the applicant and the applicant's sureties, if any, to ascertain their ability to repay fully and promptly the obligations incurred by them and to determine whether the loan or line of credit will be of probable benefit to the borrower. The credit committee and its appointed loan officers should endeavor diligently to assist applicants in solving their financial problems.

Section 7. No loan or line of credit may be made unless approved by the committee or a loan officer in accordance with applicable law and regulations.

Section 8. Subject to the limits imposed by applicable law and regulations, these bylaws, and the general policies of the board, the credit committee, or a loan officer, determines the security, if any, required for each application and the terms of repayment. The security furnished must be adequate in quality and character and consistent with sound lending practices. When funds are not available to make all the loans and lines of credit for which there are applications, preference should be given, in all cases, to the smaller applications if the need and credit factors are nearly equal.

☐ Option 2—Article VIII. Loan Officers (No Credit Committee)

Section 1. Each loan officer must maintain a record of each approved or not approved transaction within 7 days of the filing of the application or request, and such record becomes a part of the records of the credit union. No individual may disburse funds of this credit union for any application or share withdrawal which the individual has approved as a loan officer.

Section 2. The loan officer must for each loan or line of credit inquire into the character and financial condition of the applicant and the applicant's sureties, if any, to ascertain their ability to repay fully and promptly the obligations incurred by them and to determine whether the loan or line of credit will be of probable benefit to the borrower. The loan officers should endeavor diligently to assist applicants in solving their financial problems.

Section 3. No loan or line of credit may be made unless approved by a loan officer in accordance with applicable law and regulations.

Section 4. Subject to the limits imposed by applicable law and regulations, these bylaws, and the general policies of the board, a loan officer determines the security if any required for each application and the terms of repayment. The security furnished must be adequate in quality and character and consistent with sound lending practices. When funds are not available to make all the loans and lines of credit for which there are applications, preference should be given, in all cases, to the smaller applications if the need and credit factors are nearly equal.

Article IX. Supervisory Committee

Section 1. The supervisory committee is appointed by the board from among the members of this credit union, one of whom may be a director other than the financial officer. The board determines the number of members on the committee, which may not be fewer than 3 nor more than 5. No member of the credit committee, if applicable, or any employee of this credit union may be appointed to the committee. Regular terms of committee members are for periods of 1, 2, or 3 years as the board determines: provided, however, that all regular terms are for the same number of years and until the appointment and qualification of successors. The regular terms are fixed at the beginning, or upon any increase or decrease in the number of committee members, so that approximately an equal number of regular terms expires at each annual meeting.

Section 2. The supervisory committee members choose from among their number a chair and a secretary. The secretary of the supervisory committee prepares, maintains, and has custody of full and correct records of all actions taken by it. The offices of chair and secretary may be held by the same person.

Section 3. The supervisory committee makes, or causes to be made, such audits, and prepares and submits such written reports, as are required by the Act and regulations. The committee may employ and use such clerical and auditing assistance as may be required to carry out its responsibilities prescribed by this article, and may request the board to provide compensation for such assistance. It will prepare and forward to the Administration such reports as may be required.

Section 4. The supervisory committee will cause the verification of the accounts of all members with the records of the financial officer from time to time and not less frequently than as required by the Act and regulations. The committee must maintain a record of such verification.

Section 5. By unanimous vote, the supervisory committee may suspend until the next meeting of the members any director, board officer, or member of the credit committee. In the event of any such suspension, the supervisory committee must call a special meeting of the members to act on the suspension, which meeting must be held not fewer than 7 nor more than 14 days after the suspension. The chair of the committee acts as chair of the meeting unless the members select another person to act as chair.

Section 6. By the affirmative vote of a majority of its members, the supervisory committee may call a special meeting of the members to consider any violation of the provisions of the Act, the regulations, or of the charter or the bylaws of this credit union, or to consider any practice of this credit union which the committee deems to be unsafe or unauthorized.

Article X. Organization Meeting

Section 1. At the time application is made for a federal credit union charter, the subscribers to the organization certificate must meet for the purpose of electing a board of directors and a credit committee, if applicable. Failure to commence operations within 60 days following receipt of the approved organization certificate is cause for revocation of the charter unless a request for an extension of time has been submitted to and approved by the Regional Director.

Section 2. The subcribers elect a chair and a secretary for the meeting. The subscribers then elect from their number, or from those eligible to become members of this credit union, a board of directors and a credit committee, if applicable, all to hold office until the first annual meeting of the members and until the election and qualification of their respective successors. If not already a member, every person elected under this section or appointed under section 3 of this article, must qualify within 30 days by becoming a member. If any person elected as a director or committee member or appointed as a supervisory committee member does not qualify as a member within 30 days of such an election or appointment, the office will automatically become vacant and be filled by the board.

Section 3. Promptly following the elections held under the provisions of section 2 of this article, the board must meet and elect the board officers who will hold office until the first meeting of the board of directors following the first annual meeting of the members and until the election and qualification of their respective successors. The board also appoints a supervisory committee at this meeting as provided in Article IX, section 1, of these bylaws and a credit committee, if applicable. The members so appointed hold office until the first regular meeting of the board following the first annual meeting of the members and until the appointment and qualification of their respective successors.

Article XI. Loans and Lines of Credit to Members

Section 1. Loans may only be made to members and for provident or productive purposes in accordance with applicable law and regulations.

Section 2. Any member whose loan is delinquent may be required to pay a late charge as determined by the board of directors.

Article XII. Dividends

Section 1. The board establishes dividend periods and declares dividends as permitted by the Act and applicable regulations.

Article XIII. Deposit of Funds

Section 1. All funds of this credit union, except for petty cash and cash change funds, must be deposited in such qualified depository or depositories from among those authorized by applicable law and regulations as the board may from time to time by resolution designate; and must be so deposited not later than the _____ (fill in number) banking day after their receipt: provided, however, that receipts in the aggregate of $_____ (fill in number) or less may be held as long as 1 week before they are deposited.

Article XIV. Expulsion and Withdrawal

Section 1. A member may be expelled only in the manner provided by the Act. Expulsion or withdrawal will not operate to relieve a member of any liability to this credit union. All amounts paid in on shares by expelled or withdrawing members, prior to their expulsion or withdrawal, will be paid to them in the order of their withdrawal or expulsion, but only as funds become available and only after deducting any amounts due to this credit union.

Article XV. Minors

Section 1. Shares may be issued in the name of a minor.

Article XVI. General

Section 1. All power, authority, duties, and functions of the members, directors, officers, and employees of this credit union, pursuant to the provisions of these bylaws, must be exercised in strict conformity with the provisions of applicable law and regulations, and of the charter and the bylaws of this credit union.

Section 2. The officers, directors, members of committees and employees of this credit union must hold in confidence all transactions of this credit union with its members and all information respecting their personal affairs, except when permitted by state or federal law.

Section 3. Notwithstanding any other provisions in these bylaws, any director or committee member of this credit union may be removed from office by the affirmative vote of a majority of the members present at a special meeting called for the purpose, but only after an opportunity has been given to be heard.

Section 4. No director, committee member, officer, agent, or employee of this credit union may participate in any manner, directly or indirectly, in the deliberation upon or the determination of any question affecting his or her pecuniary or personal interest or the pecuniary interest of any corporation, partnership, or association (other than this credit union) in which he or she is directly or indirectly interested. In the event of the disqualification of any director respecting any matter presented to the board for deliberation or determination, such director must withdraw from such deliberation or determination; and in such event the remaining qualified directors present at the meeting, if constituting a quorum with the disqualified director or directors, may exercise with respect to this matter, by majority vote, all the powers of the board. In the event of the disqualification of any member of the credit committee, if applicable, or the supervisory committee, such committee member must withdraw from such deliberation or determination.

Section 5. Copies of the organization certificate of this credit union, its bylaws and any amendments thereof, and any special authorizations by the Administration must be preserved in a place of safekeeping. Copies of the organization certificate and field of membership amendments should be attached as an appendix to these bylaws. Returns of nominations and elections and proceedings of all regular and special meetings of the members and directors must be recorded in the minute books of this credit union. The minutes of the meetings of the members, the board, and the committees must be signed by their respective chairmen or presiding officers and by the persons who serve as secretaries of such meetings.

Section 6. All books of account and other records of this credit union must be available at all times to the directors and committee members of this credit union. The charter and bylaws of this credit union must be made available for inspection by any member and, if the member requests a copy, it will be provided for a reasonable fee.

Section 7. Members must keep the credit union informed of their current address.

Section 8. (a) The credit union may elect to indemnify to the extent authorized by (check one)

[ ] law of the state of _____:

[ ] Model Business Corporation Act:

the following individuals from any liability asserted against them and expenses reasonably incurred by them in connection with judicial or administrative proceedings to which

they are or may become parties by reason of the performance of their official duties (check as appropriate).

[ ] current officials
[ ] former officials
[ ] current employees
[ ] former employees

(b) The credit union may purchase and maintain insurance on behalf of the individuals indicated in (a) above against any liability asserted against them and expenses reasonably incurred by them in their official capacities and arising out of the performance of their official duties to the extent such insurance is permitted by the applicable state law or the Model Business Corporation Act.

(c) The term ''official'' in this bylaw means a person who is a member of the board of directors, credit committee, supervisory committee, other volunteer committee (including elected or appointed loan officers or membership officers), established by the board of directors.

Article XVII. Amendments of Bylaws and Charter

Section 1. Amendments of these bylaws may be adopted and amendments of the charter requested by the affirmative vote of two-thirds of the authorized number of members of the board at any duly held meeting of the board if the members of the board have been given prior written notice of the meeting and the notice has contained a copy of the proposed amendment or amendments. No amendment of these bylaws or of the charter may become effective, however, until approved in writing by the NCUA Board.

Article XVIII. Definitions

Section 1. When used in these bylaws the terms:

(a) ''Act'' means the Federal Credit Union Act, as amended.

(b) ''Administration'' means the National Credit Union Administration.

(c) ''Board'' means board of directors of the federal credit union.

(d) ''NCUA Board'' means the Board of the National Credit Union Administration.

(e) ''Regulation'' or ''regulations'' means rules and regulations issued by the NCUA Board.

(f) ''Applicable law and regulations'' means the Federal Credit Union Act and rules and regulations issued thereunder or other applicable federal and state statutes and rules and regulations issued thereunder as the context indicates (such as The Higher Education Act of 1965).

(g) ''Paid in and unimpaired capital,'' as of a given date, means the balance of the paid-in share accounts as of such date, less any losses that may have been incurred for which there is no reserve or which have not been charged against undivided earnings.

(h) ''Surplus,'' as of a given date, means the credit balance of the undivided earnings account on such date, after all losses have been provided for and net earnings or net losses have been added thereto or deducted therefrom, as the case may be. Reserves are not considered as a part of the surplus.

(i) ''Share'' or ''shares'' means all classes of shares and share certificates that may be held in accordance with applicable law and regulations.

Section 2. If included in the definition of the field of membership in the organization certificate charter of this credit union, the term or expressions:

(a) ''Organizations of such persons'' means an organization or organizations composed exclusively of persons who are within the field of membership of this credit union.

(b) ''Immediate family member'' eligibility is limited to spouse, child, sibling, parent, grandparent or grandchild. For the purposes of this definition, immediate family member includes stepparents, stepchildren, stepsiblings, and adoptive relationships. **A credit union may adopt a more restrictive definition of this term by deleting this definition from its bylaws and replacing it with its own more restrictive definition.**

(c) ''Household'' is defined as persons living in the same residence maintaining a single economic unit. **A credit union may adopt a more restrictive definition of this term by deleting this definition from its bylaws and replacing it with its own more restrictive definition**.

[FR Doc. 99–26716 Filed 10–13–99; 8:45 am]

BILLING CODE 7535–01–P

NATIONAL FOUNDATION ON THE ARTS AND THE HUMANITIES

Sunshine Act Meeting

Meeting of the National Museum Services Board

AGENCY: Institute of Museum and Library Services.

ACTION: Notice of meeting.

SUMMARY: This notice sets forth the agenda of a forthcoming meeting of the National Museum Services Board. This notice also describes the function of the board. Notice of this meeting is required under the Government through the Sunshine Act (Public Law 94–409) and regulations of the Institute of Museum and Library Services, 45 CFR 1180.84.

TIME/DATE: 1:30–3:30 pm on Friday, November 5, 1999.

STATUS: Open.

ADDRESSES: The Board Room of American Society of Association Executives, 1575 I Street, NW, Washington, DC 20005–1168, (202) 626–2723.

FOR FURTHER INFORMATION CONTACT: Elizabeth Lyons, Special Assistant to the Director, Institute of Museum and Library Services, 1100 Pennsylvania Avenue, NW, Room 510, Washington, DC 20506, (202) 606–4649.

SUPPLEMENTARY INFORMATION: The National Museum Services Board is established under the Museum Services Act, Title II of the Arts, Humanities, and Cultural Affairs Act of 1976, Public Law 94–462. The Board has responsibility for the general policies with respect to the powers, duties, and authorities vested in the Institute under the Museum Services Act.

The meeting on Friday, November 5, 1999 will be open to the public. If you need special accommodations due to a disability, please contact: Institute of Museum and Library Services, 1100 Pennsylvania Avenue, NW, Washington, DC 20506—(202) 606–8536—TDD (202) 606–8636 at least seven (7) days prior to the meeting date.

Agenda—76th Meeting of the National Museum Services Board

The Board Room of American Society of Association Executives, 1575 I Street, NW, Washington, DC 20005–1168

Friday, November 5, 1999

1:30—3:30pm

I. Chairperson's Welcome and Minutes of the 75th NMSB Meeting—May 14, 1999
II. Director's Report
III. Appropriations Report
IV. Legislative/Public Affairs Report
V. Office of Research and Technology Report
VI. Office of Museum Services Program Reports
VII. Office of Library Services Program Reports

Dated: October 7, 1999.

Linda Bell,

Director of Policy, Planning and Budget, National Foundation of the Arts and Humanities, Institute of Museum and Library Services.

[FR Doc. 99–26973 Filed 10–12–99; 1:00 pm]

BILLING CODE 7036–01–M

NATIONAL SCIENCE FOUNDATION

Special Emphasis Panel in Bioengineering and Environmental Systems; Notice of Meeting

In accordance with the Federal Advisory Committee Act (Pub. L. 92–463, as amended), the National Science Foundation announces the following meeting.

Name: Special Emphasis Panel in Bioengineering and Environmental System (1189).

Date and Time: November 2, 1999; 8:00 AM—5:00 PM.

Place: National Science Foundation, 4201 Wilson Boulevard; Arlington, Virginia, Room 530.

Type of Meeting: Closed.

Contact Person: Edward H. Bryan, Program Director, Division of Bioengineering and Environmental Systems, National Science Foundation; 4201 Wilson Boulevard; Arlington, Virginia 22230; Telephone: (703) 306–1318.

Purpose of Meeting: To provide advice and recommendations concerning proposals submitted to NSF for financial support.

Agenda: To review and evaluate proposals as part of the selection process for awards.

Reason for Closing: The Proposals being reviewed include information of a proprietary or confidential nature, including technical information; financial data, such as salaries; and personal information concerning individuals associated with the proposals. These matters are exempt under 5 U.S.C. 552b(c), (4) and (6) of the Government in the Sunshine Act.

Dated: October 7, 1999.

Karen J. York,

Committee Management Officer.

[FR Doc. 99–26736 Filed 10–13–99; 8:45 am]

BILLING CODE 7555–01–M

NATIONAL SCIENCE FOUNDATION

Special Emphasis Panel in Bioengineering and Environmental Systems; Notice of Meeting

In accordance with the Federal Advisory Committee Act (Pub. L. 92–463, as amended), the National Science Foundation announces the following meeting.

Name: Special Emphasis Panel in Bioengineering and Environmental Systems (1189).

Date and Time: November 5, 1999; 8:00 AM–5:00 PM.

Place: National Science Foundation, 4201 Wilson Boulevard; Arlington, Virginia Room 530.

Type of Meeting: Closed.

Contact Person: Edward H. Bryan, Program Director, Division of Bioengineering and Environmental Systems, National Science Foundation; 4201 Wilson Boulevard; Arlington, Virginia 22230; Telephone: (703) 306–1318.

Purpose of Meeting: To provide advice and recommendations concerning proposals submitted to NSF for financial support.

Agenda: To review and evaluate proposals as part of the selection process for awards.

Reason for Closing: The proposals being reviewed include information of a proprietary or confidential nature, including technical information; financial data, such as salaries; and personal information concerning individuals associated with the proposals. These matters are exempt under 5 U.S.C. 552b(c), (4) and (6) of the Government in the Sunshine Act.

Dated: October 7, 1999.

Karen J. York,

Committee Management Officer.

[FR Doc. 99–26737 Filed 10–13–99; 8:45 am]

BILLING CODE 7555–01–M

NATIONAL SCIENCE FOUNDATION

Special Emphasis Panel in Bioengineering and Environmental Systems; Notice of Meeting

In accordance with the Federal Advisory Committee Act (Pub. L. 92–463, as amended), the National Science Foundation announces the following meeting.

Name: Special Emphasis Panel in Bioengineering and Environmental Systems (1189).

Date and Time: October 20–21, 1999 8:00 AM–5:00 PM.

Place: National Science Foundation, 4201 Wilson Boulevard, Arlington, VA 22230, Room 330.

Type of Meeting: Closed.

Contact Person: Fred G. Heineken, Program Director, Division of Bioengineering and Environmental Systems, National Science Foundation, 4201 Wilson Boulevard, Arlington, VA 22230, Telephone: (703) 306–1318.

Purpose of Meeting: To provide advice and recommendations concerning proposals submitted to NSF for financial support.

Agenda: To review and evaluate proposals as part of the selection process for awards. Technology for a Sustainable Environmental (NSF/EPA) Proposal Review Panel.

Reason for Closing: The proposals being reviewed include information of a proprietary or confidential nature, including technical information; financial data, such as salaries; and person Information concerning individuals associated with the proposals. These matters are exempt under 5 U.S.C. 552b(c), (4) and (6) of the Government in the Sunshine Act.

Dated: October 7, 1999.

Karen J. York,

Committee Management Officer.

[FR Doc. 99–26738 Filed 10–13–99; 8:45 am]

BILLING CODE 7555–01–M

NATIONAL SCIENCE FOUNDATION

Advisory Panel for Biological Infrastructure; Notice of Meeting

In accordance with the Federal Advisory Committee Act (Pub. L. 92–463, as amended), The National Science Foundation announces the following meeting:

Name: Advisory Panel for Biological Infrastructure (1215).

Date and Time: November 15–17, 1999; 8:30 a.m. until 6 p.m.

Place: Room 380, NSF, 4201 Wilson Boulevard, Arlington, Virginia.

Type of Meeting: Closed.

Contact Person: Dr. William R. Gordon, Program Director, Research Experiences for Undergraduate, Division of Biological Infrastructure, Room 615, NSF, 4201 Wilson Boulevard, Arlington, VA 22230, (703) 306–1469.

Purpose of Meeting: To provide advice and recommendations concerning proposals submitted to NSF for financial support.

Agenda: To review and evaluate Research Experiences for Undergraduate Sites proposals as part of the selection process for awards.

Reason for Closing: The proposals being reviewed include informaton of a proprietary or confidential nature, including technical information; financial data, such as salaries; and personal information concerning individuals associated with the proposals. These matters are exempt under 5 U.S.C. 552b(c)(4) and (6) of the Government in the Sunshine Act.

Dated: October 7, 1999.

Karen J. York,

Committee Management Officer.

[FR Doc. 99–26735 Filed 10–13–99; 8:45 am]

BILLING CODE 7555–01–M

NATIONAL SCIENCE FOUNDATION

Special Emphasis Panel in Chemical and Transport Systems; Notice of Meeting

In accordance with the Federal Advisory Committee Act (Pub. L. 92–463, as amended), the National Science Foundation announces the following meeting:

Name: Special Emphasis Panel in Chemical and Transport Systems (1190).

Date and Time: November 16, 1999, 8:30 a.m. to 5:30 p.m. (Room 120); November 17, 1999, 8:00 a.m. to 12:00 Noon (Room 770).

Place: National Science Foundation, 4201 Wilson Boulevard, Arlington, VA 22230, (703) 306–1371.

Type of Meeting: Closed.

Contact Person: Dr. M.C. Roco, Program Director, Division of Chemical and Transport Systems (CTS), Room 525, (703) 306–1371.

Purpose of Meeting: To provide advice and recommendations concerning proposals submitted to NSF for financial support.

Agenda: To review and evaluate nominations for the FY99 Nanobiosystems

Panel, Section B proposals as part of the selection process for awards.

Reason for Closing: The proposals being reviewed include information of a proprietary or confidential nature, including technical information; financial data, such as salaries and personal information concerning individuals associated with the proposals. These matters are exempt under 5 U.S.C. 552b(c)(4) and (6) of the Government in the Sunshine Act.

Dated: October 7, 1999.

Karen J. York,

Committee Management Officer.

[FR Doc. 99–26744 Filed 10–13–99; 8:45 am]

BILLING CODE 7555–01–M

NATIONAL SCIENCE FOUNDATION

Special Emphasis Panel in Chemical and Transport Systems; Notice of Meeting

In accordance with the Federal Advisory Committee Act (Pub. L. 92–463, as amended), the National Science Foundation announces the following meeting:

Name: Special Emphasis Panel in Chemical and Transport Systems (1190).

Date and Time: November 20, 1999, 8:00 a.m. to 5:00 p.m.

Place: Opryland Hotel, 2800 Opryland Drive, Nashville, TN 37214–1297.

Type of Meeting: Closed.

Contact Person: Dr. Stefan Thynell, Program Director, Division of Chemical and Transport Systems (CTS), Room 525, (703) 306–1371.

Purpose of Meeting: To provide advice and recommendations concerning proposals submitted to NSF for financial support.

Agenda: To review and evaluate nominations for the FY99 Thermal Transport & Thermal Processing Career Panel proposals as part of the selection process for awards.

Reason for Closing: The proposals being reviewed include information of a proprietary or confidential nature, including technical information; financial data, such as salaries and personal information concerning individuals associated with the proposals. These matters are exempt under 5 U.S.C. 552b(c) (4) and (6) of the Government in the Sunshine Act.

Dated: October 7, 1999.

Karen J. York,

Committee Management Officer.

[FR Doc. 99–26745 Filed 10–13–99; 8:45 am]

BILLING CODE 7555–01–M

NATIONAL SCIENCE FOUNDATION

Advisory Committee for Education and Human Resources; Notice of Meeting

In accordance with the Federal Advisory Committee Act (Pub. L. 92–463, as amended), the National Science Foundation announces the following meeting.

Name: Advisory Committee for Education and Human Resources (#1119).

Date and Time:

November 4: 8:30 am–6:15 pm.
November 5: 8:30 am–3:00 pm.

Place: Arlington Hilton Hotel, 950 N. Stafford Street, Arlington, VA 22230.

Type of Meeting:

Part Open
Closed: November 4: 5:15 pm–6:15 pm
Discussion of Personnel Issues.

Contact Person: John B. Hunt, Senior Liaison, ACEHR, Directorate for Education and Human Resources, National Science Foundation, 4201 Wilson Boulevard, Room 805, Arlington, VA 22230, 703–306–1602.

Summary Minutes: May be obtained from contact person listed above.

Purpose of Meeting: To provide advice and recommendations concerning NSF support for Education and Human Resources.

Agenda: Review of FY2000 Programs and strategic planning for FY 2000 and beyond.

Reason for Closing: The information being discussed includes personnel issues involving specific individuals. These matters are exempt under 5 U.S.C. 552b(c)(6) of the Government in the Sunshine Act.

Dated: October 7, 1999.

Karen J. York,

Committee Management Officer, HRM.

[FR Doc. 99–26742 Filed 10–13–99; 8:45 am]

BILLING CODE 4555–01–M

NATIONAL SCIENCE FOUNDATION

Advisory Committee for Engineering; Notice of Meeting

In accordance with the Federal Advisory Committee Act (Pub. L. 92–463, as amended) the National Science Foundation announces the following meeting.

Name and Committee Code: Advisory Committee for Engineering (#1170).

Date and Time:

November 3, 1999/8:30 a.m.–5:00 p.m.
November 4, 1999/8:30 a.m.–1:00 p.m.

Place: Holiday Inn Arlington at Ballston, 4610 North Fairfax Drive (1–66 and Glebe Road), Arlington, Virginia 22203.

Type of Meeting: Open.

Contact Person: Dr. Elbert L. Marsh, Deputy Assistant Director for Engineering, National Science Foundation, Suite 505, 4201 Wilson Boulevard, Arlington, VA 22230; Telephone: (703) 306–1301. For easier building access, individuals planning to attend should contact Maxine Byrd at 703–306–1300 or at *mbyrd@nsf.gov* so that your name can be added to the building access list.

Minutes: May be obtained from the contact person listed above.

Purpose of Meeting: To provide advice, recommendations and counsel on major goals and policies pertaining to Engineering programs and activities.

Agenda: The principal focus of the forthcoming meeting will be on strategic issues, both for the Directorate and the Foundation as a whole.

Dated: October 7, 1999.

Karen J. York,

Committee Management Officer.

[FR Doc. 99–26740 Filed 10–13–99; 8:45 am]

BILLING CODE 7555–01–M

NATIONAL SCIENCE FOUNDATION

Special Emphasis Panel in Engineering Education and Centers; Notice of Meeting

In accordance with the Federal Advisory Committee Act (Pub. L. 92–463, as amended), the National Science Foundation announces the following meeting:

Name: Special Emphasis Panel in Engineering Education and Centers (#173).

Date and Time: November 1 and 2, 1999, 9:00 AM–5:00 PM.

Place: National Science Foundation, Room 330, 4201 Wilson Boulevard, Arlington, VA 22230.

Type of Meeting: Closed.

Contact Persons: Dr. Theresa A. Maldonado, Program Director, Engineering Education and Centers Division, National Science Foundation, Room 585, 4201 Wilson Boulevard, Arlington, VA 22230.

Purpose of Meeting: To provide advice and recommendations concerning proposals submitted to NSF for financial support.

Agenda: To review and evaluate proposals submitted to the Research Experience for Undergraduate Program as part of the selection process for awards.

Reason for Closing: The proposals being reviewed include information of a proprietary or confidential nature, including technical information, financial data, such as salaries; and personal information concerning individuals associated with the proposals. These matters are exempt under 5 U.S.C. 552b(c)(4) and (6) of the Government in the Sunshine Act.

Dated: October 7, 1999.

Karen J. York,

Committee Management Officer.

[FR Doc. 99–26739 Filed 10–13–99; 8:45 am]

BILLING CODE 7555–01–M

NATIONAL SCIENCE FOUNDATION

Advisory Panel for Methods, Cross-Directorate, and Science and Society Programs; Notice of Meeting

In accordance with the Federal Advisory Committee Act (Pub. L. 92–463, as amended), the National Science Foundation (NSF) announces the following 4 meetings of the Advisory Panel for Infrastructure, Methods & Science Studies (#1760);

1. Date and Time: November 11–12, 1999; 8:30 a.m.–5:00 p.m.

Place: National Science Foundation, 4201 Wilson Blvd., Arlington, VA 22230.

Contact Person: Rachelle Hollander, Program Director for SDEST, National Science Foundation, 4201 Wilson Boulevard, Arlington, VA 22230. Telephone: (703) 306–1743.

Agenda: To review and evaluate SDEST proposals as part of the selection process for awards.

2. Date and Time: November 12–13, 1998; 8:30 a.m.–5:00 p.m.

Room: National Science Foundation, 4201 Wilson Blvd., Room 365, Arlington, VA 22230.

Contact Person: Dr. Michael M. Sokal, Program Director for Science & Technology Studies, National Science Foundation, 4201 Wilson Boulevard, Arlington, VA 22230. Telephone: (703) 306–1742.

Agenda: To review and evaluate STS proposals as part of its selection process for awards.

3. Date and Time: December 3, 1999, 8:30 a.m.–5:00 p.m.

Room: National Science Foundation, 4201 Wilson Blvd., Room 130, Arlington, VA 22230.

Contact Person: Dr. Cheryl L. Eavey, Program Director for Methods, Measurement & Statistics, National Science Foundation, 4201 Wilson Boulevard, Arlington, VA 22230. Telephone: (703) 306–1729.

Agenda: To review and evaluate MMS proposals as part of its selection process for awards.

4. Date and Time: November 15, 1999; 8:30 a.m.–5:00 p.m.

Room: National Science Foundation, 4201 Wilson Blvd., Room 390, Arlington, VA 22230.

Contact Person: Bonney Sheaham, Program Director for Cross Disciplinary Activities, National Science Foundation, 4201 Wilson Boulevard, Arlington, VA 22230. Telephone: (703) 306–1733.

Agenda: To review and evaluate REU Site proposals as part of the selection process for awards.

Purpose of Meetings: To provide advice and recommendations concerning support for research proposals submitted to the NSF for financial support.

Reason for Closing: The proposals being reviewed include information of a proprietary or confidential nature, including technical information data, such as salaries, and personal information concerning individuals associated with the proposals. These matters are exempt under 5 U.S.C. 552b(c)(4) and (6) of the Government in the Sunshine Act.

Dated: October 7, 1999.

Karen J. York,

Committee Management Officer.

[FR Doc. 99–26734 Filed 10–13–99; 8:45 am]

BILLING CODE 7555–01–M

NATIONAL SCIENCE FOUNDATION

Special Emphasis Panel in Materials Research; Notice of Meeting

In accordance with the Federal Advisory Committee Act (Pub. L. 92–463, as amended), the National Science Foundation announces the following meeting.

This notice of meeting scheduled for October 12, 1999. The new meeting is scheduled for November 9, 1999.

Name: Special Emphasis Panel in Materials Research (1203).

Date and Time: November 9, 1999 8:00 a.m.–5:00 p.m.

Place: National Science Foundation, 4201 Wilson Blvd., Room 1060, Arlington, VA 22230.

Type of Meeting: Closed.

Contact Person: Dr. Liselotte J. Schioler, Program Director, Ceramics Program, Division of Materials Research, Room 1065, National Science Foundation, 4201 Wilson Boulevard, Arlington, VA 22230, Telephone: (703) 306–1836.

Purpose of Meeting: To provide advice and recommendations concerning proposals submitted to NSF for financial support.

Agenda: To review and evaluate proposals as part of the selection process to determine finalists considered for Ceramic Program awards.

Reason for Closing: The proposals being reviewed include information of a proprietary or confidential nature, including technical information, financial data, such as salaries; and personal information concerning individuals associated with the proposals. These matters are exempt under 5 U.S.C. 552b.(c)(4) and (6) of the Government in the Sunshine Act.

Dated: October 7, 1999.

Karen J. York,

Committee Management Officer.

[FR Doc. 99–26743 Filed 10–13–99; 8:45 am]

BILLING CODE 7555–01–M

NATIONAL SCIENCE FOUNDATION

Advisory Committee for Social, Behavioral, and Economic Sciences; Notice of Meeting

In accordance with the Federal Advisory Committee Act (Pub. L. 92–463, as amended), the National Science Foundation announces the following meeting.

Name: Advisory Committee for Social, Behavioral, and Economic Sciences (1171).

Date and Time:

November 4, 1999 8:30 am–5:30 pm.

November 4, 1999 8:30 am–2:30 pm.

Place: NSF, Room 1235, 4201 Wilson Blvd., Arlington, VA 22230.

Type of Meeting: Open.

Contact Person: Dr. Kenneth M. Brown, Executive Secretary; Directorate for Social Behavioral, and Economic Sciences, NSF, Suite 905; 4201 Wilson Blvd., Arlington, VA 22230, Telephone: (703) 306–1741.

Minutes: May be obtained from the contact person listed above.

Purpose of Meeting: To provide advice and recommendations to the National Science Foundation on major goals and policies pertaining to SBE programs and activities.

Agenda: discussions on issues, role and future direction of the NSF Directorate for Social Behavioral, and Economic Sciences.

Dated: October 7, 1999.

Karen J. York,

Committee Management Officer.

[FR Doc. 99–26741 Filed 10–13–99; 8:45 am]

BILLING CODE 7555–01–M

NATIONAL TRANSPORTATION SAFETY BOARD

Public Hearing

The National Transportation Safety Board will convene a public hearing beginning at 9 a.m., local time on Wednesday, October 20–22, 1999, at the Hilton Los Angeles Airport, 5711 West Century Boulevard, Los Angeles, California 90045 concerning *Highway Transportation Safety Aspects of the North American Free Trade Agreement*. For more information, contact Jeanmarie Poole, NTSB Office of Highway Safety at (202) 314–6448 or Lauren Peduzzi, NTSB Office of Public Affairs at (202) 314–6100.

Individuals requesting specific accommodation should contact Mrs. Carolyn Dargan on 202–314–6305 by Friday October 15, 1999.

Dated: October 8, 1999.

Rhonda Underwood,

Federal Register Liaison Officer.

[FR Doc. 99–26847 Filed 10–13–99; 8:45 am]

BILLING CODE 7533–01–M

NUCLEAR REGULATORY COMMISSION

[Docket No. 40–9027–MLA; ASLBP No. 99–757–01–MLA]

Cabot Performance Materials; Notice of Reconstitution

Pursuant to the authority contained in 10 CFR 2.721 and 2.1207, the Presiding Officer in the captioned 10 CFR part 2, Subpart L proceeding is hereby replaced by appointing Administrative Judge Alan S. Rosenthal as Presiding Officer in place of Administrative Judge Peter B. Bloch.

All correspondence, documents, and other material shall be filed with the Presiding Officer in accordance with 10 CFR 2.1203. The address of the new Presiding Officer is: Administrative

Judge Alan S. Rosenthal, Atomic Safety and Licensing Board Panel, U.S. Nuclear Regulatory Commission, Washington, DC 20555–0001.

Issued at Rockville, Maryland, this 7th day of October 1999.

G. Paul Bollwerk III,

Chief Administrative Judge, Atomic Safety and Licensing Board Panel.

[FR Doc. 99–26776 Filed 10–13–99; 8:45 am]

BILLING CODE 7590–01–P

NUCLEAR REGULATORY COMMISSION

[Docket No. 50–400–LA; ASLBP No. 99–762–02–LA]

In the Matter of Carolina Power & Light Company (Shearon Harris Nuclear Power Plant) ; Notice (Opportunity To Make Oral or Written Limited Appearance Statements)

October 7, 1999.

In accordance with 10 CFR 2.715(a), the Atomic Safety and Licensing Board will entertain oral limited appearance statements in connection with this proceeding regarding the December 23, 1998 request of Carolina Power & Light Company (CP&L) under 10 CFR 50.90 for a license amendment to increase the spent fuel storage capacity at its Shearon Harris Nuclear Power Plant (Harris), located in Wake and Chatham Counties, North Carolina. In its amendment request, CP&L seeks authorization to add rack modules to spent fuel pools ''C'' and ''D'' and place the pools in service.

A. Date, Time, and Location of Oral Limited Appearance Statement Sessions

The Board will hear oral limited appearance statements on the following dates at the specified locations and times:

Date: Tuesday, December 7, 1999.

Times: Afternoon Session—1:00 p.m. to 4:00 p.m.; Eastern Standard Time (EST); Evening Session—7:00 p.m. to 9:30 p.m. EST.

Location: Jane S. McKimmon Conference Center, North Carolina State University, Corner of Gorman Street and Western Avenue, Raleigh, North Carolina.

Date: Wednesday, December 8, 1999.

Times: Afternoon Session—1:00 p.m. to 4:00 p.m. EST; Evening Session—7:00 p.m. to 9:30 p.m. EST.

Location: Southern Human Resources Center, Main Meeting Room 2505 Homestead Road, Chapel Hill, North Carolina.

B. Participation Guidelines for Oral Limited Appearance Statements

Any person not a party to the proceeding will be permitted to make an oral statement setting forth his or her position on matters of concern relating to this proceeding. These statements do not constitute testimony or evidence, but may help the Board and/or the parties in their deliberations in connection with the issues to be considered in this proceeding.

Oral limited appearance statements will be entertained during the hours specified above, or during such lesser time as may be necessary to accommodate the speakers who are present. The time allotted for each statement normally will be no more than five minutes, but may be further limited depending on the number of written requests to make an oral statement that are submitted in accordance with section C below and/or the number of persons present at the designated times.

C. Submitting Request To Make an Oral Limited Appearance Statement

Persons wishing to make an oral statement who have submitted a timely written request to do so will be given priority over those who have not filed such a request. In order to be considered timely, a written request to make an oral statement must be mailed, faxed, or sent by e-mail so as to be received by close of business (4:30 p.m. EST) on *Monday, November 29, 1999.* The request must specify the date (Tuesday, December 7, or Wednesday, December 8) and the session on that day (afternoon or evening) during which the requester wishes to make an oral statement.

Written requests to make an oral statement should be submitted to: Mail: Office of the Secretary, Rulemakings and Adjudications Staff, U.S. Nuclear Regulatory Commission, Washington, D.C. 20555–0001; Fax: (301) 415–1101 (verification (301) 415–1966); E-mail: hearingdocket@nrc.gov.

In addition, using the same method of service, a copy of the written request to make an oral statement should be sent to the Chairman of this Licensing Board as follows: Mail: Administrative Judge G. Paul Bollwerk, III, Atomic Safety and Licensing Board Panel, Mail Stop T–3F23, U.S. Nuclear Regulatory Commission, Washington, D.C. 20555–0001; Fax: (301) 415–5599 (verification (301) 415–7550); E-mail: gpb@nrc.gov.

D. Submitting Written Limited Appearance Statements

As the Board has noted previously, a written limited appearance statement can be submitted at any time. Such a statement should be sent to the Office of the Secretary by mail at the address given in section C above, with a copy to the Licensing Board Chairman at the address given in section C.

Documents relating to this application currently are on file at the Cameron Village Regional Library, 1930 Clark Avenue, Raleigh, North Carolina 27605.

Rockville, Maryland, October 7, 1999.

For the Atomic Safety and Licensing Board.[1]

G. Paul Bollwerk III,

Administrative Judge.

[FR Doc. 99–26779 Filed 10–13–99; 8:45 am]

BILLING CODE 7590–01–P

NUCLEAR REGULATORY COMMISSION

[Docket No. 50–247]

Consolidated Edison Company of New York, Inc.; Notice of Consideration of Issuance of Amendment to Facility Operating License, Proposed No Significant Hazards Consideration Determination, and Opportunity for a Hearing

The U.S. Nuclear Regulatory Commission (the Commission) is considering issuance of an amendment to Facility Operating License No. DPR–26 issued to Consolidated Edison Company of New York, Inc. (the licensee) for operation of the Indian Point Nuclear Generating Unit No. 2, located in Westchester County, New York.

The proposed amendment would allow a one-time extension of several calibrations and test of instrument channels from 30 months to 37 months. Specifically the proposed amendment would affect (a) reactor coolant flow transmitters; (b) containment sump level (discrete) Recirculation sump level (discrete); (c) Pressurizer level transmitters; (d) 480 volt undervoltage; (e) 6.9 kv undervoltage relays and 6.9 kv underfrequency relays; (f) Steam generator level—transmitters; (g) residual heat removal (RHR) flow calibration—transmitters; (h) Accumulator level transmitters; (i) Accumulator pressure transmitters; (j) Steam line pressure transmitters; (k) Containment sump, Recirculation sump, Reactor cavity level (continuous), and Containment sump (continuous); (l) Volume control tank level; (m) Fan

[1] Copies of this notice were sent this date by Internet e-mail transmission to counsel for (1) applicant CP&L; (2) intervenor Board of Commissioners of Orange County, North Carolina; and (3) the NRC staff.

cooler unit (FCU) cooling flow transmitters; (n) overpressure protection pressure transmitters (field) Pressurizer power operated relief valve's; (o) Pressurizer pressure—transmitters; (p) OT[Delta]T and OP[Delta]T setpoint generators. Exigent circumstances exist because the 30-month surveillance interval for some of these instruments expires on October 31, 1999.

Before issuance of the proposed license amendment, the Commission will have made findings required by the Atomic Energy Act of 1954, as amended (the Act) and the Commission's regulations.

Pursuant to 10 CFR 50.91(a)(6) for amendments to be granted under exigent circumstances, the NRC staff must determine that the amendment request involves no significant hazards consideration. Under the Commission's regulations in 10 CFR 50.92, this means that operation of the facility in accordance with the proposed amendment would not (1) involve a significant increase in the probability or consequences of an accident previously evaluated; or (2) create the possibility of a new or different kind of accident from any accident previously evaluated; or (3) involve a significant reduction in a margin of safety. As required by 10 CFR 50.91(a), the licensee has provided its analysis of the issue of no significant hazards consideration, which is presented below:

(1) Does the proposed license amendment involve a significant increase in the probability or consequences of an accident previously evaluated?

(A) The proposed license amendment does not involve a significant increase in the probability or consequences of an accident previously evaluated. A statistical analysis of uncertainties for the RCS [reactor coolant system] flow channels for a 30-month operating cycle was performed. A corresponding statistical evaluation of the projected drift over a 37-month operating cycle has also been performed. The drift and bias thus calculated has been evaluated with regard to RCS flow CSA [channel statistical allowance] versus the Safety Analysis limits and it has been determined that the drift can be accommodated within the existing related Safety Analysis limits. It has also been determined that there is no general impact upon any Technical Specification requirements or the related Safety Analysis limits.

The existing margin between the Technical Specification limits and the Safety Analysis limits provides assurance that plant protective functions will occur as required. It is therefore concluded that changing the surveillance interval from 24 months (plus 25%) to 37 months for the transmitter will not result in a significant increase in the probability or consequences of an accident previously evaluated.

(B) The proposed license amendment does not involve a significant increase in the probability or consequences of an accident previously evaluated. It has been concluded that there will be no impact upon any Technical Specification Requirement or Safety Analysis Limits. Of the surveillance anomalies identified since 1986, only one impacted an instrument channel. In this instance, level indication continued to be maintained due to redundancy.

As added assurance, the current Indian Point Unit 2 Technical Specifications require a channel check be performed every shift, providing a means to monitor the channels for gross failure.

The existing margin between the Technical Specification limits and the Safety Analysis limits remains unchanged and provides assurance that plant protective functions will occur as required. It is therefore concluded that changing the surveillance interval from 24 months (plus 25%) to 37 months for the channels will not result in a significant increase in the probability or consequences of an accident previously evaluated.

(C) The proposed license amendment does not involve a significant increase in the probability or consequences of an accident previously evaluated. A statistical analysis of channel uncertainty for a 30 month operating cycle was previously performed. A corresponding statistical evaluation of the projected drift of the transmitter over a 37-month operating cycle has currently been performed. Subsequently, when drift of the remainder of the channel (calibrated at the Technical Specification frequency of 24 months) is combined with the drift and bias of the transmitter projected at 37 months, the sum is accommodated by the channel uncertainty calculations. Therefore, the channel uncertainty derived for 30 months is valid for a 37-month operating cycle providing the rack is calibrated at the 24-month (plus 25%) frequency and the transmitter is calibrated at 37 months.

It can also be concluded that sufficient allowance exists between the existing Technical Specification limits and the licensing basis Safety Analysis limits to accommodate the channel statistical error resulting from a 37 month operating cycle (with a rack calibration at 24 months plus 25%).

The existing allowance between the Technical Specification limits and the Safety Analysis limits provides assurance that plant protective functions will occur as required. Thus, the Channel Statistical Allowance for 37 months can be accommodated without impacting the Incensing basis Safety Analysis.

It is therefore concluded that changing the surveillance interval from 24 months (plus 25%) to 37 months for the transmitter will not result in a significant increase in the probability or consequences of an accident previously evaluated.

(D) The proposed license amendment does not involve a significant increase in the probability or consequences of an accident previously evaluated. A statistical analysis of uncertainties for the 480 volt under voltage and degraded voltage relay channels for a 30-month operating cycle was performed. A corresponding statistical evaluation of the projected drift over a 37-month operating cycle has also been performed. The drift thus calculated has been evaluated with regard to the original CSA and has been found to be bounded by the CSA value. In addition, the relay setpoints have been compared with the Safety Analysis limits and it has been determined that the drift and bias can be accommodated within the existing related Safety Analysis limits. It has also been determined that there is no general impact upon any Technical Specification requirements or the related Safety Analysis limits.

The existing margin between the Technical Specification limits and the Safety Analysis limits provides assurance that plant protective functions will occur as required. It is therefore concluded that changing the surveillance interval from 24 months (plus 25%) to 37 months for the 480 volt under voltage and degraded voltage relays will not result in a significant increase in the probability or consequences of an accident previously evaluated.

(E) The proposed license amendment does not involve a significant increase in the probability or consequences of an accident previously evaluated. A statistical analysis of uncertainties for the 6.9 kV under voltage and Under Frequency relay channels for a 30-month operating cycle was performed. Corresponding statistical evaluations of the projected drifts over a 37-month operating cycle has also been performed. It has been confirmed that the drifts for 37 months will be no greater than the drifts projected for 30 months. The drifts thus calculated have been evaluated with regard to under voltage and under frequency set points versus the Safety Analysis limits and it has been determined that the drift can be accommodated within the existing related Safety Analysis limits with no decrease in margin. It has also been determined that there is no general impact upon any Technical Specification requirements of the related Safety Analysis limits.

The existing margin between the Technical Specification limits and the Safety Analysis limits provides assurance that plant protective functions will occur as required. It is therefore concluded that hanging the surveillance interval from 24 months (plus 25%) to 37 months for the under voltage and under frequency relays will not result in a significant increase in the probability or consequences of an accident previously evaluated.

(F) The proposed license amendment does not involve a significant increase in the probability or consequences of an accident previously evaluated. A statistical analysis of channel uncertainty for a 30 month operating cycle was previously performed. A corresponding statistical evaluation of the projected drift of the transmitters over a 37-month operating cycle has currently been performed. Subsequently, when drift of the remainder of the channel (calibrated at the Technical Specification frequency of 24 months) is combined with the drift and bias of the transmitter projected at 37 months, the sum does not exceed the original CSA at 30 months. Therefore, the channel uncertainty

derived for 30 months is valid for a 37-month operating cycle providing the rack is calibrated at the 24-month (plus 25%) frequency and the transmitter is calibrated at 37 months. It has been demonstrated that sufficient allowance exists between the existing Technical Specification limits and the licensing basis Safety Analysis limits to accommodate the channel statistical error resulting from a 37 month operating cycle (with a rack calibration at 24 months plus 25%).

The existing allowance between the Technical Specification limits and the Safety Analysis limits provides assurance that plant protective functions will occur as required. It is therefore concluded that changing the surveillance interval from 24 months (plus 25%) to 37 months for the transmitters will not result in a significant increase in the probability or consequences of an accident previously evaluated.

(G) The proposed license amendment does not involve a significant increase in the probability or consequences of an accident previously evaluated. A statistical analysis of channel uncertainty for a 30 month operating cycle was previously performed. A corresponding statistical evaluation of the projected drift of the transmitter over a 37-month operating cycle has currently been performed. Subsequently, when drift of the remainder of the channel (calibrated at the Technical Specification frequency of 24 months) is combined with the drift and bias of the transmitter projected at 37 months, the sum does not exceed the original projection at 30 months. Therefore, the channel uncertainty derived for 30 months is valid for a 37-month operating cycle providing the rack is calibrated at the 24-month (plus 25%) frequency and the transmitter is calibrated at 37 months.

The proposed change does not affect the existing Safety Analysis limit nor any Technical Specification limits. Plant equipment will function as before, in order to preserve Safety Analysis limits.

It is therefore concluded that changing the surveillance interval from 24 months (plus 25%) to 37 months for the transmitters will not result in a significant increase in the probability or consequences of an accident previously evaluated.

(H) The proposed license amendment does not involve a significant increase in the probability or consequences of an accident previously evaluated. A statistical analysis of uncertainties for the accumulator level channels for a 30-month operating cycle was performed. A corresponding statistical evaluation of the projected drift over a 37-month operating cycle has also been performed. It has been confirmed that the drift, including bias, for 37 months will be bounded by the CSA originally calculated for 30 months. The drift thus calculated has been evaluated with regard to level setpoints, versus the Safety Analysis limits and it has been determined that the drift, including bias, can be accommodated within the existing related Safety Analysis limits. It has also been determined that there is no general impact upon any Technical Specification requirements or the related Safety Analysis limits.

The existing margin between the Technical Specification limits and the Safety Analysis limits provides assurance that plant protective functions will occur as required. It is therefore concluded that changing the surveillance interval from 24 months (plus 25%) to 37 months for the transmitter will not result in a significant increase in the probability or consequences of an accident previously evaluated.

(I) The proposed license amendment does not involve a significant increase in the probability or consequences of an accident previously evaluated. A statistical analysis of uncertainties for the accumulator pressure channels for a 30-month operating cycle was performed. A corresponding statistical evaluation of the projected drift over a 37-month operating cycle has also been performed. It has been confirmed that the drift for 37 months will be no greater than the drift projected for 30 months. The drift thus calculated has been evaluated with regard to accumulator pressure setpoints versus the Safety Analysis limits and it has been determined that the drift can be accommodated within the existing related Safety Analysis limits. It has also been determined that there is no general impact upon any Technical Specification requirements or the related Safety Analysis limits.

The accumulators are passive engineered safety features since gas forces injection and no external source of power or signal transmission is needed to obtain fast-acting, high-flow capability when injection is required. One accumulator is attached to each of the four cold legs of the reactor coolant system.

The existing margin between the Technical Specification limits and the Safety Analysis limits provides assurance that plant protective functions will occur as required. It is therefore concluded that changing the surveillance interval from 24 months (plus 25%) to 37 months for the transmitter will not result in a significant increase in the probability or consequences of an accident previously evaluated.

(J) The proposed license amendment does not involve a significant increase in the probability or consequences of an accident previously evaluated. A statistical analysis of uncertainties for the steam line pressure channels for a 30-month operating cycle was performed. A corresponding statistical evaluation of the projected drift over a 37-month operating cycle has also been performed. It has been confirmed that the drift for 37 months will be no greater than the drift projected for 30 months. The drift thus calculated has been evaluated with regard to steam line pressure setpoints versus the Safety Analysis limits and it has been determined that the drift can be accommodated within the existing related Safety Analysis limits. It has also been determined that there is no general impact upon any Technical Specification requirements or the related Safety Analysis limits. The existing margin between the Technical Specification limits and the Safety Analysis limits provides assurance that plant protective functions will occur as required. It is therefore concluded that changing the surveillance interval from 24 months (plus 25%) to 37 months for the transmitter will not result in a significant increase in the probability or consequences of an accident previously evaluated.

(K) The proposed license amendment does not involve a significant increase in the probability or consequences of an accident previously evaluated. A statistical analysis of channel uncertainty for a 30 month operating cycle was previously performed. A corresponding statistical evaluation of the projected drift and bias of the transmitters over a 37-month operating cycle has currently been performed. Subsequently, when drift of the remainder of the channels (calibrated at the Technical Specification frequency of 24 months is combined with the drift and bias of the transmitters projected at 37 months, the sum does not exceed the original projections at 30 months. Therefore, the channel uncertainty derived for 30 months is valid for a 37-month operating cycle providing the rack is calibrated at the 24-month (plus 25%) frequency and the transmitters are calibrated at 37 months. The sump level indications are provided to the control room by both magnetic switch/float-type detectors (series of 5 lights provide discrete level indication) and differential pressure transmitter (continuous level indication) which encompasses redundancy and diversity associated with containment sump level monitoring.

The existing allowance between the Technical Specification limits and the Safety Analysis limits provides assurance that plant protective functions will occur as required. No change in these allowances has occurred due to the proposed revision in surveillance interval of the transmitters.

It is therefore concluded that changing the surveillance interval from 24 months (plus 25%) to 37 months for the transmitter will not result in a significant increase in the probability or consequences of an accident previously evaluated.

(L) The proposed license amendment does not involve a significant increase in the probability or consequences of an accident previously evaluated. A statistical analysis of channel uncertainty for a 30 month operating cycle was previously performed. A corresponding statistical evaluation of the projected drift of the channel over a 37-month operating cycle has currently been performed. It has been confirmed that the channel drift for a 37-month interval is bounded by the existing drift allowance used in the current uncertainty calculations. Therefore, the channel uncertainty derived for 30 months is valid for a 37-month operating cycle. There are no nominal setpoints within the Technical Specifications for the level of the Volume Control Tank nor are there any applicable Safety Analysis Limits. Thus, the Channel Statistical Allowance for 37 months can be accommodated without impacting the licensing basis Safety Analysis.

It is therefore concluded that changing the surveillance interval from 24 months (plus 25%) to 37 months for the transmitter will not result in a significant increase in the probability or consequences of an accident previously evaluated.

(M) The proposed license amendment does not involve a significant increase in the probability or consequences of an accident previously evaluated. A statistical analysis of uncertainties for the FCU [fan cooler unit] flow channels for a 30-month operating cycle was performed. A corresponding statistical evaluation of the projected drift of the transmitters over a 37-month operating cycle has also been performed. When drift of the remainder of the channel (calibrated at 24 months) is combined with the drift and bias of the transmitter at 37 months, the sum does not exceed the original projection at 30 months. Therefore, the channel uncertainty derived for 30 months is valid for a 37 month operating cycle providing the rack is calibrated at the 24 month (plus 25%) frequency and the transmitter is calibrated at 37 months. In addition, the flow controllers to the Fan Cooling Units have had their low flow setpoints raised to provide operators with earlier alarms associated with FCU system flow degradation.

It has been determined that there is no general impact upon any Technical Specification requirements or related Safety Analysis limits. The Indian Point Unit 2 Technical Specification does not specify a specific setpoint. It is therefore concluded that changing the surveillance interval from 24 months (plus 25%) to 37 months for the transmitter will not result in a significant increase in the probability or consequences of an accident previously evaluated.

(N) The proposed license amendment does not involve a significant increase in the probability or consequences of an accident previously evaluated. Statistical analyses of OPS [over pressure protection] pressure and PORV [power operated relief valve] channel uncertainties for a 30 month operating cycle were previously performed.

A corresponding statistical evaluation of the projected drift of the OPS pressure transmitter over a 37-month operating cycle has currently been performed. It has been confirmed that when the transmitter drift for a 37-month interval is determined it is bounded by the existing drift allowance used in the uncertainty calculations. Subsequently, when drift of the remainder of the channel (calibrated at the Technical Specification frequency of 24 months) is combined with the drift of the transmitter projected at 37 months, the sum does not exceed the original projection at 30 months. Therefore, the channel uncertainty derived for 30 months is valid for a 37-month operating cycle providing the rack is calibrated at the 24-month (plus 25%) frequency and the transmitter is calibrated at 37 months.

Similarly, a statistical evaluation of the projected drift of the PORV channel over a 37 month operating cycle has currently been performed. It has been confirmed that the channel drift for a 37-month interval is bounded by the existing drift allowance used in the current uncertainty calculations. Therefore, the channel uncertainty derived for thirty months is valid for a 37 month-operating cycle.

It can also be concluded that sufficient allowance exists between the existing Technical Specification limits and the licensing basis Safety Analysis limits to accommodate the channel statistical errors resulting from a 37 month operating cycle.

The existing allowance between the Technical Specification limits and the Safety Analysis limits provides assurance that plant protective functions will occur as required. It is therefore concluded that changing the surveillance interval from 24 months (plus 25%) to 37 months for the OPS pressure transmitter and the PORV channels will not result in a significant increase in the probability or consequences of any accident previously evaluated.

(O) The proposed license amendment does not involve a significant increase in the probability or consequences of an accident previously evaluated. A statistical analysis of channel uncertainty for a 30 month operating cycle was previously performed. A corresponding statistical evaluation of the projected drift of the transmitter over a 37-month operating cycle has currently been performed. Subsequently, when drift of the remainder of the channel (calibrated at the Technical Specification frequency of 24 months) is combined with the drift and bias of the transmitters projected at 37 months, the sum does not exceed the original projection at 30 months. Therefore, the channel uncertainty derived for 30 months is valid for a 37-month operating cycle providing the rack is calibrated at the 24-month (plus 25%) frequency and the transmitter is calibrated at 37 months. It can also be concluded that sufficient allowance exists between the existing Technical Specification limits and the licensing basis Safety Analysis limits to accommodate the channel statistical error resulting from a 37 month operating cycle (with a rack calibration at 24 months plus 25%).

The existing allowance between the Technical Specification limits and the Safety Analysis limits provides assurance that plant protective functions will occur as required. It is therefore concluded that changing the surveillance interval from 24 months (plus 25%) to 37 months for the transmitter will not result in a significant increase in the probability or consequences of an accident previously evaluated.

(P) The proposed license amendment does not involve a significant increase in the probability or consequences of an accident previously evaluated. A statistical analysis of channel uncertainty for a 30 month operating cycle was previously performed. The OT[Delta]T/OP[Delta]T uncertainty calculations of record for Con Ed are derived from PC–R1A, PC–R1B, and PT–Q52. Of these, the quarterly surveillance performed via PT–Q52 provides the governing uncertainty allowances because it performs a functional check of the complete channel from rack input through output (bistable) every 90 days. This includes the R/E converters, E/I converters, I/I converters, OT[Delta]T setpoint generators, OP[Delta]T setpoint generators, OP[Delta]T impulse lag modules, and the bistables. If a problem is detected in PT–Q52, other procedures (PC–RIA, PC–RIB, PT–VIIA) are invoked to perform thorough evaluation and recalibration, as necessary. Therefore, the rack drift allowance incorporated in the OT[Delta]T and OP[Delta]T setpoint calculations are based on the performance of PT–Q52. Thus, continued performance of PT–Q52 on a quarterly basis, even in conjunction with the one time extension of PC–EM37, provides assurance that all modules are performing correctly.

Therefore, the channel uncertainty derived for 30 months is valid for a 37-month operating cycle since the rack components are checked on a quarterly frequency. It can also be concluded that sufficient margin exists between the existing Technical Specification limits and the licensing basis Safety Analysis limits to accommodate the channel statistical error resulting from a 37 month operating cycle (with a rack calibration at 24 months plus 25%).

The existing margin between the Technical Specification limits and the Safety Analysis limits provides assurance that plant protective functions will occur as required. It is therefore concluded that changing the surveillance interval from 24 months (plus 25%) to 37 months for the transmitter will not result in a significant increase in the probability or consequences of an accident previously evaluated.

(2) Does the proposed license amendment create the possibility of a new or different kind of accident from any accident previously evaluated?

(A) The proposed license amendment does not create the possibility of a new or different kind of accident from any previously evaluated. The proposed change does not involve the addition of any new or different type of equipment, nor does it involve operating equipment required for safe operation of the facility in a manner that is different from that addressed in the Updated Final Safety Analysis Report. Also, the increased surveillance interval (one-time only) will not adversely affect the reactor coolant system flow instrumentation functions. The proposed change in operating cycle length due to an increased surveillance interval for the transmitters will not result in a channel statistical allowance which exceeds the current margin and therefore the margin between the existing Technical Specification limits and the Safety Analysis limits. Plant equipment, which will be nominally set at (or more conservatively than) Technical Specification limits, will provide protective functions to assure that Safety Analysis limits are not exceeded. This will prevent the possibility of a new or different kind of accident from any previously evaluated from occurring.

(B) The proposed license amendment does not create the possibility of a new or different kind of accident from any previously evaluated. The proposed change does not involve the addition of any new or different type of equipment, nor does it involve operating equipment required for safe operation of the facility in a manner that is different from that addressed in the Updated Final Safety Analysis Report. The increased surveillance interval (one-time only) will not adversely affect the Containment sump level and Recirculation Sump Level instrumentation functions. Plant equipment, which will be nominally set at (or more conservatively than) Technical Specification

limits, will provide protective functions to assure that Safety Analysis limits are not exceeded. This will prevent the possibility of a new or different kind of accident from any previously evaluated from occurring.

(C) The proposed license amendment does not create the possibility of a new or different kind of accident from any previously evaluated. The proposed change does not involve the addition of any new or different type of equipment, nor does it involve operating equipment required for safe operation of the facility in a manner that is different from that addressed in the Updated Final Safety Analysis Report. Also, the increased surveillance, interval (one-time only) will not adversely affect the Pressurizer Level instrumentation functions. The proposed change in operating cycle length due to an increased surveillance interval for the transmitters will not result in a channel statistical allowance which exceeds the current margin and therefore the margin between the existing Technical Specification limits and the Safety Analysis limits. Plant equipment, which will be nominally set at (or more conservatively than) Technical Specification limits, will provide protective functions to assure that Safety Analysis limits are not exceeded.

This will prevent the possibility of a new or different kind of accident from any previously evaluated from occurring.

(D) The proposed license amendment does not create the possibility of a new or different kind of accident from any previously evaluated. The proposed change does not involve the addition of any new or different type of equipment, nor does it involve operating equipment required for safe operation of the facility in a manner that is different from that addressed in the Updated Final Safety Analysis Report. Also, the increased surveillance interval (one-time only) will not adversely affect the 480 Volt under voltage or degraded voltage instrumentation functions. The proposed change in operating cycle length due to an increased surveillance interval for the relays will not result in a channel statistical allowance which exceeds the current margin and therefore the margin between the existing Technical Specification limits and the Safety Analysis limits. Plant equipment, which will be nominally set at (or more conservatively than) Technical Specification limits, will provide protective functions to assure that Safety Analysis limits are not exceeded. This will prevent the possibility of a new or different kind of accident from any previously evaluated from occurring.

(E) The proposed license amendment does not create the possibility of a new or different kind of accident from any previously evaluated. The proposed change does not involve the addition of any new or different type of equipment, nor does it involve operating equipment required for safe operation of the facility in a manner that is different from that addressed in the Updated Final Safety Analysis Report. The increased surveillance interval (one-time only) will not adversely affect the 6.9 kV Under Voltage and Under Frequency instrumentation functions. The proposed change in operating cycle length due to an increased surveillance interval for the relays will not result in a channel statistical allowance which reduces the margin between the existing Technical Specification limits and the Safety Analysis limits. Plant equipment, which will be nominally set at (or more conservatively than) Technical Specification limits, will provide protective functions to assure that Safety Analysis limits are not exceeded. This will prevent the possibility of a new or different kind of accident from any previously evaluated from occurring.

(F) The proposed license amendment does not create the possibility of a new or different kind of accident from any previously evaluated. The proposed change does not involve the addition of any new or different type of equipment, nor does it involve operating equipment required for safe operation of the facility in a manner that is different from that addressed in the Updated Final Safety Analysis Report. Also, the increased surveillance interval (one-time only) will not adversely affect the steam generator level instrumentation functions. The proposed change in operating cycle length due to an increased surveillance interval for the transmitter will not result in a channel statistical allowance which exceeds the current margin and therefore will not exceed the margin between the existing Technical Specification limits and the Safety Analysis limits. Plant equipment, which will be nominally set at (or more conservatively than) Technical Specification limits, will provide protective functions to assure that Safety Analysis limits are not exceeded. This will prevent the possibility of a new or different kind of accident from any previously evaluated from occurring.

(G) The proposed license amendment does not create the possibility of a new or different kind of accident from any previously evaluated. The proposed change does not involve the addition of any new or different type of equipment, nor does it involve operating equipment required for safe operation of the facility in a manner that is different from that addressed in the Updated Finial Safety Analysis Report. Also, the increased surveillance interval (one-time only) will not adversely affect the RHR [Residual Heat Removal] Flow instrumentation functions. The proposed change in operating cycle length due to an increased surveillance interval for the transmitter will not impact any Technical Specification limit or Safety Analysis limit. Plant protective functions will occur as designed.

This will prevent the possibility of a new or different kind of accident from any previously evaluated from occurring.

(H) The proposed license amendment does not create the possibility of a new or different kind of accident from any previously evaluated. The proposed change does not involve the addition of any new or different type of equipment, nor does it involve operating equipment required for safe operation of the facility in a manner that is different from that addressed in the Updated Final Safety Analysis Report. Also, the increased surveillance interval (one-time only) will not adversely affect the accumulator level instrumentation functions. The proposed change in operating cycle length due to an increased surveillance interval for the level transmitters will not result in a channel statistical allowance which exceeds the current margin and therefore the margin between the existing Technical Specification limits and the Safety Analysis limits. Plant equipment, which will be nominally set at (or more conservatively than) Technical Specification limits, will provide protective functions to assure that Safety Analysis limits are not exceeded. This will prevent the possibility of a new or different kind of accident from any previously evaluated from occurring.

(I) The proposed license amendment does not create the possibility of a new or different kind of accident from any previously evaluated. The proposed change does not involve the addition of any new or different type of equipment, nor does it involve operating equipment required for safe operation of the facility in a manner that is different from that addressed in the Updated Final Safety Analysis Report. Also, the increased surveillance interval (one-time only) will not adversely affect the accumulator pressure instrumentation functions. The proposed change in operating cycle length due to an increased surveillance interval for the transmitters will not result in a channel statistical allowance which exceeds the current margin and therefore the margin between the existing Technical Specification limits and the Safety Analysis limits. Plant equipment, which will be nominally set at (or more conservatively than) Technical Specification limits, will provide protective functions to assure that Safety Analysis limits are not exceeded. This will prevent the possibility of a new or different kind of accident from any previously evaluated from occurring.

(J) The proposed license amendment does not create the possibility of a new or different kind of accident from any previously evaluated. The proposed change does not involve the addition of any new or different type of equipment, nor does it involve operating equipment required for safe operation of the facility in a manner that is different from that addressed in the Updated Final Safety Analysis Report. Also, the increased surveillance interval (one-time only) will not adversely affect the steam line pressure instrumentation functions. The proposed change in operating cycle length due to an increased surveillance interval for the relays will not result in a channel statistical allowance which exceeds the current margin and therefore the margin between the existing Technical Specification limits and the Safety Analysis limits. Plant equipment, which will be nominally set at (or more conservatively than) Technical Specification limits, will provide protective functions to assure that Safety Analysis limits are not exceeded. This will prevent the possibility of a new or different kind of accident from any previously evaluated from occurring.

(K) The proposed license amendment does not create the possibility of a new or different kind of accident from any previously evaluated. The proposed change does not involve the addition of any new or different

type of equipment, nor does it involve operating equipment required for safe operation of the facility in a manner that is different from that addressed in the Updated Final Safety Analysis Report. The proposed change in operating cycle length due to an increased surveillance interval for the transmitters will not result in a channel statistical allowance which impacts the current margin between the existing Technical Specification limits and the Safety Analysis limits. Plant equipment, which will be nominally set at (or more conservatively than) Technical Specification limits, will provide protective functions to assure that Safety Analysis limits are not exceeded.

This will prevent the possibility of a new or different kind of accident from any previously evaluated from occurring.

(L) The proposed license amendment does not create the possibility of a new or different kind of accident from any previously evaluated. The proposed change does not involve the addition of any new or different type of equipment, nor does it involve operating equipment required for safe operation of the facility in a manner that is different from that addressed in the Updated Final Safety Analysis Report. There are no nominal setpoints within the Technical Specifications for the level of the Volume Control Tank nor are there any applicable Safety Analysis Limits. Thus, the Channel Statistical Allowance for 37 months can be accommodated without impacting the licensing basis Safety Analysis.

Other Plant equipment, which will be nominally set at (or more conservatively than) Technical Specification limits, will continue to provide protective functions to assure that Safety Analysis limits are riot exceeded. This will prevent the possibility of a new or different kind of accident from any previously evaluated from occurring.

(M) The proposed license amendment does not create the possibility of a new or different kind of accident from any previously evaluated. The proposed change does not involve the addition of any new or different type of equipment, nor does it involve operating equipment required for safe operation of the facility in a manner that is different from that addressed in the Updated Final Safety Analysis Report.

The proposed change in surveillance interval for the transmitter will not result in any impact upon existing Technical Specifications or Safety Analysis. Therefore, plant equipment will continue to provide protective functions to assure that Safety Analysis limits are not exceeded.

This will prevent the possibility a new or different kind of accident from any previously evaluated from occurring.

(N) The proposed license amendment does not create the possibility of a new or different kind of accident from any previously evaluated. The proposed change does not involve the addition of any new or different type of equipment, nor does it involve operating equipment required for safe operation of the facility in a manner that is different from that addressed in the Updated Final Safety Analysis Report. The increased surveillance interval (one-time only) will not adversely affect the PORV Actuation/ Reclosure and Overpressure Protection System (OPS) instrumentation functions. The proposed change in operating cycle length due to an increased surveillance interval will not result in channel statistical allowance which exceeds current margins and therefore, the margins between existing Technical Specification limits and Safety Analysis limits. Plant equipment, which will be nominally set at (or more conservatively than) Technical Specification limits, will provide protective functions to assure that Safety Analysis limits are not exceeded. This will prevent the possibility of a new or different kind of accident from any previously evaluated from occurring.

(O) The proposed license amendment does not create the possibility of a new or different kind of accident from any previously evaluated. The proposed change does not involve the addition of any new or different type of equipment, nor does it involve operating equipment required for safe operation of the facility in a manner that is different from that addressed in the Updated Final Safety Analysis Report. Also, the increased surveillance interval (one-time only) will not adversely affect the Pressurizer Pressure channel instrumentation functions. The proposed change in operating cycle length due to an increased surveillance interval for the transmitter will not result in a channel statistical allowance which exceeds the current margin and therefore the margin between the existing Technical Specification limits and the Safety Analysis limits. Plant equipment, which will be nominally set at (or more conservatively than) Technical Specification limits, will provide protective functions to assure that Safety Analysis limits are not exceeded. This will prevent the possibility of a new or different kind of accident from any previously evaluated from occurring.

(P) The proposed license amendment does not create the possibility of a new or different kind of accident from any previously evaluated. The proposed change does not involve the addition of any new or different type of equipment, nor does it involve operating equipment required for safe operation of the facility in a manner that is different from that addressed in the Updated Final Safety Analysis Report. The increased surveillance interval (one-time only) will not adversely affect the OP/OT [Delta]T instrumentation functions since these loop functions are checked on a quarterly basis under PT–Q52. The proposed change in operating cycle length due to an increased surveillance interval for the setpoint generators will not result in a channel statistical allowance which exceeds the current margin. It can also be concluded that sufficient margin exists between the existing Technical Specification limits and the licensing basis Safety Analysis limits to accommodate the channel statistical error resulting from a 37 month operating cycle (with a rack calibration at 24 months plus 25%).

This will prevent the possibility of a new or different kind of accident from any previously evaluated from occurring.

(3) Does the proposed amendment involve a significant reduction in a margin of safety?

(A) The proposed license amendment does not involve a significant reduction in a margin of safety. Because the change in surveillance interval resulting from an increased operating cycle will not result in a channel statistical allowance which exceeds the margin which exists between the current Technical Specification limit and the licensing basis Safety Analysis limit, protective functions will occur so that Safety Analysis limits are not exceeded. Therefore, the proposed change for a one-time extension of the test interval does not adversely affect the performance of any safety related system, component or structure and does not result in increased severity of any of the accidents considered in the Updated Final Safety Analysis Report. Based on past test results, the one-time extension of the surveillance interval for the transmitters by seven months does not involve a significant reduction in a margin of safety.

(B) The proposed license amendment does not involve a significant reduction in a margin of safety. The surveillance anomalies noted did not render the level indication system non-operational. Therefore, based on the redundancy and the reliability of the system, extension of the surveillance interval for a maximum of seven months for these tests would have little affect on the reliability of the discrete level indication systems. The historical data supports the conclusion that the margin of safety will not be compromised by extending the interval between tests on a one-time basis to a maximum of 37 months. Based on past test results, the one-time extension of six months does not involve a significant reduction in a margin of safety.

(C) The proposed license amendment does not involve a significant reduction in a margin of safety. Because the change in surveillance interval resulting from an increased operating cycle will not result in a channel statistical allowance which exceeds any margin which exists between the current Technical Specification limit and the licensing basis Safety Analysis limit, protective functions will occur so that Safety Analysis limits are not exceeded. Thus, the Channel Statistical Allowance for 37 months can be accommodated without impacting the licensing basis Safety Analysis. Therefore, the proposed change for a one-time extension of the test interval does not adversely affect the performance of any safety related system, component or structure and does not result in increased severity of any of the accidents considered in the Updated Final Safety Analysis Report. Based on past test results, the one-time extension of the surveillance interval for the transmitters by six months does not involve a significant reduction in a margin of safety.

(D) The proposed license amendment does not involve a significant reduction in a margin of safety. Because the change in surveillance interval resulting from an increased operating cycle will not result in a channel statistical allowance which exceeds the margin which exists between the current Technical Specification limit and the licensing basis Safety Analysis limit, protective functions will occur so that Safety Analysis limits are not exceeded. Therefore, the proposed change for a one-time extension

of the test interval does not adversely affect the performance of any safety related system, component or structure and does not result in increased severity of any of the accidents considered in the Updated Final Safety Analysis Report. Based on past test results, the one'-time extension of six months does not involve a significant reduction in a margin of safety.

(E) The proposed license amendment does not involve a significant reduction in a margin of safety. Because the change in surveillance interval resulting from an increased operating cycle will not result in a channel statistical allowance which impacts the margin which exists between the current Technical Specification limit and the licensing basis Safety Analysis limit, protective functions will occur so that Safety Analysis limits are not exceeded. Therefore, the proposed change for a one-time extension of the test interval does not adversely affect the performance of any safety related system, component or structure and does not result in increased severity of any of the accidents considered in the Updated Final Safety Analysis Report. Based on past test results, the one-time extension of seven months does not involve a significant reduction in a margin of safety.

(F) The proposed license amendment does not involve a significant reduction in a margin of safety. Because the change in surveillance interval resulting from an increased operating cycle will not result in a channel statistical allowance which exceeds the margin which exists between the current Technical Specification limit and the licensing basis Safety Analysis limit, protective functions will occur so that Safety Analysis limits are not exceeded. Therefore, the proposed change for a one-time extension of the test interval does not adversely affect the performance of any safety related system, component or structure and does not result in increased severity of any of the accidents considered in the Updated Final Safety Analysis Report. Based on past test results, the one-time extension of the surveillance interval for the transmitters by seven months does not involve a significant reduction in a margin of safety.

(G) The proposed license amendment does not involve a significant reduction in a margin of safety. Because the change in surveillance interval resulting from an increased operating cycle will not result in a channel statistical allowance which affects the margin between any current Technical Specification limit and any licensing basis Safety Analysis limit, protective functions will occur so that Safety Analysis limits are not exceeded. Therefore, the proposed change for a one-time extension of the test interval does not adversely affect the performance of any safety related system, component or structure and does not result in increased severity of any of the accidents considered in the Updated Final Safety Analysis Report. In conclusion, based upon the recently completed 37 month drift value being less than the existing 24 month drift value, the one-time extension of the surveillance interval for the transmitter for seven months does not involve a significant increase in a margin of safety.

(H) The proposed license amendment does not involve a significant reduction in a margin of safety. Because the change in surveillance interval resulting from an increased operating cycle will not result in a channel statistical allowance which exceeds the margin which exists between the current Technical Specification limit and the licensing basis Safety Analysis limit, protective functions will occur so that Safety Analysis limits are not exceeded. Therefore, the proposed change for a one-time extension of the test interval does not adversely affect the performance of any safety related system, component or structure and does not result in increased severity of any of the accidents considered in the Updated Final Safety Analysis Report. Based on past test results, the one-time extension of the surveillance interval for the transmitter by seven months does not involve a significant reduction in a margin of safety.

(I) The proposed license amendment does not involve a significant reduction in a margin of safety. Because the change in surveillance interval resulting from an increased operating cycle will not result in a channel statistical allowance which exceeds the margin existing between the current Technical Specification limit and the licensing basis Safety Analysis limit, protective functions will occur so that Safety Analysis limits are not exceeded. Therefore, the proposed change for a one-time extension of the test interval does not adversely affect the performance of any safety related system, component or structure and does not result in increased severity of any of the accidents considered in the Updated Final Safety Analysis Report. Based on past test results, the one-time extension of the surveillance interval for the transmitter by seven months does not involve a significant reduction in a margin of safety.

(J) The proposed license amendment does not involve a significant reduction in a margin of safety. Because the change in surveillance interval resulting from an increased operating cycle will not result in a channel statistical allowance which exceeds the margin which exists between the current Technical Specification limit and the licensing basis Safety Analysis limit, protective functions will occur so that Safety Analysis limits are not exceeded. Therefore, the proposed change for a one-time extension of the test interval does not adversely affect the performance of any safety related system, component or structure and does not result in increased severity of any of the accidents considered in the Updated Final Safety Analysis Report. Based on past test results, the one-time extension of the surveillance interval for the transmitter by six months does not involve a significant reduction in a margin of safety.

(K) The proposed license amendment does not involve a significant reduction in a margin of safety. The change in surveillance interval resulting from an increased operating cycle will not result in a channel statistical allowance which impacts any margin which exits between the current Technical Specification limits and the licensing basis Safety Analysis Limits. Therefore, protective functions will continue to occur unchanged so that Safety Analysis limits are not exceeded. There is no reduction in the margin between any existing Technical Specification limit and its related Safety Analysis limit. Therefore, the proposed change for a one-time extension of the calibration and test interval does not adversely affect the performance of any safety related system, component or structure and does result in increased severity of any of the accidents considered in the Updated Final Safety Analysis Report. Based on past test results, the one-time extension of the surveillance frequency for the channel transmitters does not involve a significant reduction in a margin of safety.

(L) The proposed license amendment does not involve a significant reduction in a margin of safety. The change in surveillance interval resulting from an increased operating cycle will not result in a channel statistical allowance which impacts any Technical Specification limits nor any licensing basis Safety Analysis limit. Protective functions will continue to occur so that Safety Analysis limits are not exceeded. There are no nominal setpoints within the Technical Specifications for the level of the Volume Control Tank nor are there any applicable Safety Analysis Limits.

Therefore, the proposed change for a one-time extension of the test interval does not adversely affect the performance of any safety related system, component or structure and does not result in increased severity of any of the accidents considered in the Updated Final Safety Analysis Report. Based on past test results, the one-time extension of seven months for calibration of the channel does not involve a significant reduction in a margin of safety.

(M) The proposed license amendment does not involve a significant reduction in a margin of safety.

Because the change in surveillance interval resulting from an increased operating cycle will not impact the margin which exists between current Technical Specification limits and licensing basis Safety Analysis limits, protective functions will continue to occur so that Safety Analysis limits are not affected. In addition, the flow controllers to the Fan Cooling Units have had their low flow setpoints raised to provide operators with an earlier warning associated with FCU system flow degradation. Therefore, the proposed change for a one-time extension of the transmitter surveillance interval does not adversely affect the performance of any safety related system, component or structure and does not result in increased severity of any of the accidents considered in the Updated Final Safety Analysis Report.

(N) The proposed license amendment does not involve a significant reduction in a margin of safety. Because the change in surveillance interval resulting from an increased operating cycle will not result in a channel statistical allowance which exceeds the margin existing between the current Technical Specification limit and the licensing basis Safety Analysis limit, protective functions will occur so that Safety Analysis limits are not exceeded. Therefore, the proposed change for a one-time extension of the calibration intervals does not adversely

affect the performance of any safety related system, component or structure and does not result in increased severity of any of the accidents considered in the Updated Final Safety Analysis Report. Based on past test results, the one-time extension of seven months for the OPS transmitters and six months for PORV set point calibrations does not involve a significant reduction in a margin of safety.

(O) The proposed license amendment does not involve a significant reduction in a margin of safety. Because the change in surveillance interval resulting from an increased operating cycle will not result in a channel statistical allowance which exceeds the margin which exists between the current Technical Specification limit and the licensing basis Safety Analysis limit, protective functions will occur so that Safety Analysis limits are not exceeded. Therefore, the proposed change for a one-time extension of the test interval does not adversely affect the performance of any safety related system, component or structure and does not result in increased severity of any of the accidents considered in the Updated Final Safety Analysis Report. Based on past test results, the one-time extension of the surveillance interval for the transmitters by seven months does not involve a significant reduction in a margin of safety.

(P) The proposed license amendment does not involve a significant reduction in a margin of safety. Because the change in surveillance interval resulting from an increased operating cycle will not result in a channel statistical allowance which exceeds the margin which exists between the current Technical Specification limit and the licensing basis Safety Analysis limit, protective functions will occur so that Safety Analysis limits are not exceeded. Therefore, the proposed change for a one-time extension of the test interval does not adversely affect the performance of any safety related system, component or structure and does not result in increased severity of any of the accidents considered in the Updated Final Safety Analysis Report. The OP/OT [Delta]T instrumentation loop functions are checked on a quarterly basis under PT-Q52. Based on past test results, the one-time extension of six months does not involve a significant reduction in a margin of safety.

The NRC staff has reviewed the licensee's analysis and, based on this review, it appears that the three standards of 10 CFR 50.92(c) are satisfied. Therefore, the NRC staff proposes to determine that the amendment request involves no significant hazards consideration.

The Commission is seeking public comments on this proposed determination. Any comments received within 14 days after the date of publication of this notice will be considered in making any final determination.

Normally, the Commission will not issue the amendment until the expiration of the 14-day notice period. However, should circumstances change during the notice period such that failure to act in a timely way would result, for example, in derating or shutdown of the facility, the Commission may issue the license amendment before the expiration of the 14-day notice period, provided that its final determination is that the amendment involves no significant hazards consideration. The final determination will consider all public and State comments received. Should the Commission take this action, it will publish in the **Federal Register** a notice of issuance and provide for opportunity for a hearing after issuance. The Commission expects that the need to take this action will occur very infrequently.

Written comments may be submitted by mail to the Chief, Rules and Directives Branch, Division of Administrative Services, Office of Administration, U.S. Nuclear Regulatory Commission, Washington, DC 20555–0001, and should cite the publication date and page number of this **Federal Register** notice. Written comments may also be delivered to Room 6D59, Two White Flint North, 11545 Rockville Pike, Rockville, Maryland, from 7:30 a.m. to 4:15 p.m. Federal workdays. Copies of written comments received may be examined at the NRC Public Document Room, the Gelman Building, 2120 L Street, NW., Washington, DC.

The filing of requests for hearing and petitions for leave to intervene is discussed below.

By November 15, 1999, the licensee may file a request for a hearing with respect to issuance of the amendment to the subject facility operating license and any person whose interest may be affected by this proceeding and who wishes to participate as a party in the proceeding must file a written request for a hearing and a petition for leave to intervene. Requests for a hearing and a petition for leave to intervene shall be filed in accordance with the Commission's ''Rules of Practice for Domestic Licensing Proceedings'' in 10 CFR part 2. Interested persons should consult a current copy of 10 CFR 2.714 which is available at the Commission's Public Document Room, the Gelman Building, 2120 L Street, NW., Washington, DC, and at the local public document room located at the White Plains Library, 100 Martin Avenue, White Plains, New York 10610. If a request for a hearing or petition for leave to intervene is filed by the above date, the Commission or an Atomic Safety and Licensing Board, designated by the Commission or by the Chairman of the Atomic Safety and Licensing Board Panel, will rule on the request and/or petition; and the Secretary or the designated Atomic Safety and Licensing Board will issue a notice of hearing or an appropriate order.

As required by 10 CFR 2.714, a petition for leave to intervene shall set forth with particularity the interest of the petitioner in the proceeding, and how that interest may be affected by the results of the proceeding. The petition should specifically explain the reasons why intervention should be permitted with particular reference to the following factors: (1) the nature of the petitioner's right under the Act to be made party to the proceeding; (2) the nature and extent of the petitioner's property, financial, or other interest in the proceeding; and (3) the possible effect of any order which may be entered in the proceeding on the petitioner's interest. The petition should also identify the specific aspect(s) of the subject matter of the proceeding as to which petitioner wishes to intervene. Any person who has filed a petition for leave to intervene or who has been admitted as a party may amend the petition without requesting leave of the Board up to 15 days prior to the first prehearing conference scheduled in the proceeding, but such an amended petition must satisfy the specificity requirements described above.

Not later than 15 days prior to the first prehearing conference scheduled in the proceeding, a petitioner shall file a supplement to the petition to intervene which must include a list of the contentions which are sought to be litigated in the matter. Each contention must consist of a specific statement of the issue of law or fact to be raised or controverted. In addition, the petitioner shall provide a brief explanation of the bases of the contention and a concise statement of the alleged facts or expert opinion which support the contention and on which the petitioner intends to rely in proving the contention at the hearing. The petitioner must also provide references to those specific sources and documents of which the petitioner is aware and on which the petitioner intends to rely to establish those facts or expert opinion. Petitioner must provide sufficient information to show that a genuine dispute exists with the applicant on a material issue of law or fact. Contentions shall be limited to matters within the scope of the amendment under consideration. The contention must be one which, if proven, would entitle the petitioner to relief. A petitioner who fails to file such a supplement which satisfies these requirements with respect to at least one contention will not be permitted to participate as a party.

Those permitted to intervene become parties to the proceeding, subject to any limitations in the order granting leave to intervene, and have the opportunity to participate fully in the conduct of the hearing, including the opportunity to present evidence and cross-examine witnesses.

If a hearing is requested, the Commission will make a final determination on the issue of no significant hazards consideration. The final determination will serve to decide when the hearing is held.

If the final determination is that the amendment request involves no significant hazards consideration, the Commission may issue the amendment and make it immediately effective, notwithstanding the request for a hearing. Any hearing held would take place after issuance of the amendment.

If the final determination is that the amendment request involves a significant hazards consideration, any hearing held would take place before the issuance of any amendment.

A request for a hearing or a petition for leave to intervene must be filed with the Secretary of the Commission, U.S. Nuclear Regulatory Commission, Washington, DC 20555–0001, Attention: Rulemakings and Adjudications Staff, or may be delivered to the Commission's Public Document Room, the Gelman Building, 2120 L Street, NW., Washington, DC, by the above date. A copy of the petition should also be sent to the Office of the General Counsel, U.S. Nuclear Regulatory Commission, Washington, DC 20555–0001, and to Brent L. Brandenburg, Esq., 4 Irving Place, New York, New York 10003, attorney for the licensee.

Nontimely filings of petitions for leave to intervene, amended petitions, supplemental petitions and/or requests for hearing will not be entertained absent a determination by the Commission, the presiding officer or the presiding Atomic Safety and Licensing Board that the petition and/or request should be granted based upon a balancing of the factors specified in 10 CFR 2.714(a)(1)(i)–(v) and 2.714(d).

For further details with respect to this action, see the application for amendment dated April 21, 1999, which is available for public inspection at the Commission's Public Document Room, the Gelman Building, 2120 L Street, NW., Washington, DC, and at the local public document room located at the White Plains Library, 100 Martine Avenue, White Plains, New York 10610.

Dated at Rockville, Maryland, this 7th day of October 1999.

For the Nuclear Regulatory Commission.

Jefferey F. Harold,

Project Manager, Section 1, Project Directorate I, Division of Licensing Project Management, Office of Nuclear Reactor Regulation.

[FR Doc. 99–26780 Filed 10–13–99; 8:45 am]

BILLING CODE 7590–01–P

NUCLEAR REGULATORY COMMISSION

[Docket No. 50–155–ML and ASLBP No. 79–423–11–ML]

Consumers Power (Big Rock Point); Notice of Reconstitution

Pursuant to the authority contained in 10 CFR 2.721, the Atomic Safety and Licensing Board in the captioned 10 CFR part 2, Subpart G proceeding is hereby reconstituted by appointing Administrative Judge G. Paul Bollwerk, III, as Chairman in place of Administrative Judge Peter B. Bloch.

All correspondence, documents and other material shall be filed with the new Board Chairman in accordance with 10 CFR 2.701. The address of the new Chairman is: Administrative Judge G. Paul Bollwerk, III, Atomic Safety and Licensing Board Panel, U.S. Nuclear Regulatory Commission, Washington, DC 20555–0001.

Issued at Rockville, Maryland, this 7th day of October 1999.

G. Paul Bollwerk III,

Chief Administrative Judge, Atomic Safety and Licensing Board Panel.

[FR Doc. 99–26772 Filed 10–13–99; 8:45 am]

BILLING CODE 7590–01–P

NUCLEAR REGULATORY COMMISSION

[Docket No. 40–8681-MLA–5; ASLBP No. 99–758–02–MLA]

International Uranium (USA) Corporation; Notice of Reconstitution

Pursuant to the authority contained in 10 CFR 2.721 and 2.1207, the Presiding Officer in the captioned 10 CFR part 2, Subpart L proceeding is hereby replaced by appointing Administrative Judge G. Paul Bollwerk, III as Presiding Officer in place of Administrative Judge Peter B. Bloch.

All correspondence, documents, and other material shall be filed with the Presiding Officer in accordance with 10 CFR 2.1203. The address of the new Presiding Officer is: Administrative Judge G. Paul Bollwerk, III, Atomic Safety and Licensing Board Panel, U.S. Nuclear Regulatory Commission, Washington, DC 20555–0001.

Issued at Rockville, Maryland, this 7th day of October 1999.

G. Paul Bollwerk III,

Chief Administrative Judge, Atomic Safety and Licensing Board Panel.

[FR Doc. 99–26775 Filed 10–13–99; 8:45 am]

BILLING CODE 7590–01–P

NUCLEAR REGULATORY COMMISSION

[Docket Nos. 40–8794–MLA and 40–8778–MLA; ASLBP No. 99–769–08–MLA]

Molycorp, Inc.; Notice of Reconstitution

Pursuant to the authority contained in 10 CFR 2.721 and 2.1207, the Presiding Officer in the captioned 10 CFR Part 2, Subpart L proceeding is hereby replaced by appointing Administrative Judge Charles Bechhoefer as Presiding Officer in place of Administrative Judge Peter B. Bloch.

All correspondence, documents, and other material shall be filed with the Presiding Officer in accordance with 10 CFR 2.1203. The address of the new Presiding Officer is: Administrative Judge Charles Bechhoefer; Atomic Safety and Licensing Board Panel, U.S. Nuclear Regulatory Commission, Washington, D.C. 20555–0001.

Issued at Rockville, Maryland, this 7th day of October 1999.

G. Paul Bollwerk III,

Chief Administrative Judge, Atomic Safety and Licensing Board Panel.

[FR Doc. 99–26774 Filed 10–13–99; 8:45 am]

BILLING CODE 7590–01–P

NUCLEAR REGULATORY COMMISSION

[Docket No. 50–344]

Portland General Electric Company, et al.; Trojan Nuclear Plant; Notice of Receipt, Availability for Comment, and Meeting To Discuss License Termination Plan

The Nuclear Regulatory Commission (NRC) is in receipt of and is making available for public inspection and comment the License Termination Plan (LTP) for the Trojan Nuclear Plant (TNP) located in Columbia County, Oregon, on the west bank of the Columbia River.

Portland General Electric Company (PGE, or the licensee) announced permanent cessation of power operations of TNP on January 4, 1993. In accordance with NRC regulations in effect at that time, PGE submitted a decommissioning plan for TNP to the NRC in January 1995, which was approved by the NRC on April 15, 1996.

The facility is undergoing active decontamination and dismantlement.

In accordance with 10 CFR 50.82(a)(9), all power reactor licensees must submit an application for termination of their license. The application for termination of license must be accompanied or preceded by an LTP to be submitted for NRC approval. If found acceptable by the NRC staff, the LTP is approved by license amendment, subject to such conditions and limitations as the NRC staff deems appropriate and necessary. PGE submitted the proposed LTP for TNP by application dated August 5, 1999. In accordance with 10 CFR 20.1405 and 10 CFR 50.82(a)(9)(iii), the NRC is providing notice to individuals in the vicinity of the site that the NRC is in receipt of the TNP LTP, and will accept comments from affected parties. In accordance with 10 CFR 50.82(a)(9)(iii), the NRC is also providing notice that the NRC staff will conduct a meeting to discuss the TNP LTP on Tuesday, December 7, 1999, at 7:00 p.m. at the Best Western—Oak Meadows Inn, located at 585 South Columbia River Highway, St Helens, Oregon.

The TNP LTP is available for public inspection at the TNP local public document room, located at the Branford Price Millar Library, Portland State University, 934 SW Harrison Street, P.O. Box 1151, Portland, Oregon 97202, and at the Commission's Public Document Room, The Gelman Building, 2120 L Street, NW, Washington, DC 20037.

Comments regarding the TNP LTP may be submitted in writing and addressed to Mr. Lee Thonus, Mail Stop O–11–D19, Project Directorate IV and Decommissioning, Division of Licensing Project Management, Office of Nuclear Reactor Regulation, U.S. Nuclear Regulatory Commission, Washington, DC 20555–0001, telephone (717) 948–1161 or e-mail LHT@nrc.gov.

Dated at Rockville, Maryland, this 6th day of October 1999.

For the Nuclear Regulatory Commission.

Richard F. Dudley,

Acting Chief, Decommissioning Section, Project Directorate IV and Decommissioning, Division of Licensing Project Management, Office of Nuclear Reactor Regulation.

[FR Doc. 99–26782 Filed 10–13–99; 8:45 am]

BILLING CODE 7590–01–P

NUCLEAR REGULATORY COMMISSION

[Docket No. 50–460–OL and ASLBP No. 82–479–06–OL]

Washington Public Power Supply System; Notice of Reconstitution

Pursuant to the authority contained in 10 CFR 2.721, the Atomic Safety and Licensing Board in the captioned 10 CFR part 2, Subpart G proceeding is hereby reconstituted by appointing Administrative Judge G. Paul Bollwerk, III, as Chairman in place of Administrative Judge Peter B. Bloch.

All correspondence, documents, and other material shall be filed with the new Board Chairman in accordance with 10 CFR 2.701. The address of the new Chairman is: Administrative Judge G. Paul Bollwerk, III, Atomic Safety and Licensing Board Panel, U.S. Nuclear Regulatory Commission, Washington, DC 20555–0001.

Issued at Rockville, Maryland, this 7th day of October 1999.

G. Paul Bollwerk III,

Chief Administrative Judge, Atomic Safety and Licensing Board Panel.

[FR Doc. 99–26773 Filed 10–13–99; 8:45 am]

BILLING CODE 7590–01–P

NUCLEAR REGULATORY COMMISSION

[Docket Nos. 50–317 and 50–318]

Baltimore Gas and Electric Company; Notice of Availability of the Final Supplement 1 to the Generic Environmental Impact Statement for the License Renewal of Calvert Cliffs Nuclear Power Plant, Unit Nos. 1 and 2

Notice is hereby given that the U.S. Nuclear Regulatory Commission (the Commission) has published a final plant-specific Supplement 1 to the Generic Environmental Impact Statement (GEIS) (NUREG–1437) regarding the renewal of operating licenses DPR–53 and DPR–69 for an additional 20 years of operation at the Calvert Cliffs Nuclear Power Plant (CCNPP), Unit Nos. 1 and 2, respectively. CCNPP is located in Calvert County, Maryland. Possible alternatives to the proposed action (license renewal) include no action and reasonable alternative energy sources.

In Section 9.3 of the report, the staff concludes: Based on (1) the analysis and findings in the Generic Environmental Impact Statement for License Renewal of Nuclear Power Plants, NUREG–1437, (2) the ER [Environmental Report] submitted by BGE, (3) consultation with other Federal, State, and local agencies, (4) its own independent review, and (5) its consideration of public comments, the staff recommends that the Commission determine that the adverse environmental impacts of license renewal for Calvert Cliffs Nuclear Power Plant Unit 1 and Unit 2 are not so great that preserving the option of license renewal for energy planning decisionmakers would be unreasonable.

The final supplement to the GEIS for CCNPP is available for public inspection and copying at the Commission's Public Document Room at the Gelman Building, 2120 L Street NW., Washington, DC, and the Local Public Document Room located in the Calvert County Public Library, 30 Duke Street, Prince Frederick, MD 20678.

FOR FURTHER INFORMATION, CONTACT: Mr. Thomas J. Kenyon, Generic Issues, Environmental, Financial, and Rulemaking Branch, Division of Regulatory Improvement Programs, U.S. Nuclear Regulatory Commission, Washington, DC 20555. Mr. Kenyon can be contacted at (301) 415–1120 or by writing to: Thomas J. Kenyon, U.S. Nuclear Regulatory Commission, MS 0–11 F1, Washington, DC 20555.

Dated at Rockville, Maryland, this 5th day of October, 1999.

For the Nuclear Regulatory Commission.

Scott F. Newberry,

Acting Director, Division of Regulatory Improvement Programs, Office of Nuclear Reactor Regulation.

[FR Doc. 99–26781 Filed 10–13–99; 8:45 am]

BILLING CODE 7590–01–P

NUCLEAR REGULATORY COMMISSION

Advisory Committee on Reactor Safeguards; Meeting of the Subcommittee on Human Factors; Notice of Meeting

The ACRS Subcommittee meeting on Human Factors scheduled to be held on Friday, October 22, 1999, has been *rescheduled for Friday, November 19, 1999, 8:30 a.m., in Room T–2B3, 11545 Rockville Pike, Rockville, Maryland.* Notice of this meeting was published in the **Federal Register** on Friday, October 1, 1999 (64 FR 53423). All other items pertaining to this meeting remain the same as previously published.

For further information contact the cognizant ACRS staff engineers, Mr. Noel F. Dudley (telephone 301/415–6888) or Mr. Juan Peralta (telephone 301/415–6855) between 7:30 a.m. and 4:15 p.m. (EDT).

Dated: October 7, 1999.

John T. Larkins,

Executive Director, ACRS/ACNW.

[FR Doc. 99–26777 Filed 10–13–99; 8:45 am]

BILLING CODE 7590–01–P

NUCLEAR REGULATORY COMMISSION

Advisory Committee on Reactor Safeguards; Meeting Notice

In accordance with the purposes of sections 29 and 182b. of the Atomic Energy Act (42 U.S.C. 2039, 2232b), the Advisory Committee on Reactor Safeguards will hold a meeting on November 4–6, 1999, in Conference Room T–2B3, 11545 Rockville Pike, Rockville, Maryland. The date of this meeting was previously published in the **Federal Register** on Wednesday, November 18, 1998 (63 FR 64105).

Thursday, November 4, 1999

8:30 A.M.–9:15 A.M.: Preparation for Meeting with the Commission (Open)—The Committee will discuss topics proposed for meeting with the NRC Commissioners: Risk-Informing 10 CFR part 50; Risk-Informing 10 CFR 50.59; Relationship and Balance Between PRA Results and Defense-in-Depth; Strategy for Reviewing License Renewal Applications; NRC Safety Research Program; Multiple Structures, Systems, and Components (SSCs) out of Service During Maintenance; High Burnup Fuel Phenomena Identification and Ranking; and Low-Power and Shutdown Operations Risk.

9:30 A.M.–11:30 A.M.: Meeting with the Commission (Open)—The Committee will meet with the NRC Commissioners at the Commissioners' Conference Room, One White Flint North, to discuss the items noted above.

1:00 P.M.–1:15 P.M.: Opening Remarks by the ACRS Chairman (Open)—The ACRS Chairman will make opening remarks regarding the conduct of the meeting.

1:15 P.M.–2:45 P.M.: Proposed Revision to Section 11 of NUMARC 93–01, Assessment of Risk Resulting from Performance of Maintenance Activities (Open)—The Committee will hear presentations by and hold discussions with representatives of the Nuclear Energy Institute (NEI) and NRC staff regarding proposed revision to Section 11 of NUMARC 93–01.

3:00 P.M.–5:00 P.M.: NRC Safety Research Program Report to the Commission (Open)—The Committee will discuss the proposed ACRS report to the Commission on the NRC Safety Research Program and related matters.

5:00 P.M.–6:00 P.M.: Break and Preparation of Draft ACRS Reports (Open)—Cognizant ACRS members will prepare draft reports for consideration by the full Committee.

6:00 P.M.–7:00 P.M.: Discussion of Proposed ACRS Reports (Open)—The Committee will discuss proposed ACRS reports, including those on: Proposed Resolution of Generic Safety Issue-148, ''Smoke Control and Manual Fire Fighting Effectiveness''; and Proposed Regulatory Guide on Design Bases Information; as well as the Joint ACRS/ACNW Report on the Proposed Framework for Risk-Informed Regulation in the Office of Nuclear Material Safety and Safeguards.

Friday, November 5, 1999

8:30 A.M.–8:35 A.M.: Opening Remarks by the ACRS Chairman (Open)—The ACRS Chairman will make opening remarks regarding the conduct of the meeting.

8:35 A.M.–10:00 A.M.: Proposed Changes to the Design Control Document Associated with the AP600 Design (Open)—The Committee will hear presentations by and hold discussions with representatives of the NRC staff and Westinghouse Electric Company regarding proposed changes to the Design Control Document related to the AP600 design and the associated NRC staff's evaluation.

10:15 A.M.–11:45 A.M.: Spent Fuel Fire Risk Associated with Decommissioning (Open)—The Committee will hear presentations by and hold discussions with representatives of the NRC staff regarding the status of staff activities related to assessing the spent fuel fire risk associated with decommissioning, spent fuel pool risk assessment study, and related matters.

12:45 P.M.–1:45 P.M.: Status of Resolution of Issues Associated with the Design Bases Information (Open)—The Committee will hear presentations by and hold discussions with representatives of the NRC staff and Nuclear Energy Institute (NEI) regarding the status of resolution of the differences between the NRC staff and NEI related to NEI 97–04 document, ''Design Bases Program Guidelines.''

1:45 P.M.–2:15 P.M.: Future ACRS Activities (Open)—The Committee will discuss the recommendations of the Planning and Procedures Subcommittee regarding items proposed for consideration by the full Committee during future meetings.

2:30 P.M.–3:00 P.M.: Report of the Planning and Procedures Subcommittee (Open)—The Committee will hear a report of the Planning and Procedures Subcommittee on matters related to the conduct of ACRS business.

3:00 P.M.–3:15 P.M.: Reconciliation of ACRS Comments and Recommendations (Open)—The Committee will discuss the responses from the NRC Executive Director for Operations (EDO) to comments and recommendations included in recent ACRS reports and letters. The EDO responses are expected to be made available to the Committee prior to the meeting.

3:15 P.M.–4:15 P.M.: Break and Preparation of Draft ACRS Reports (Open)—Cognizant ACRS members will prepare draft reports for consideration by the full Committee.

4:15 P.M.–7:00 P.M.: Discussion of Proposed ACRS Reports (Open)—The Committee will discuss proposed ACRS reports.

Saturday, November 6, 1999

8:30 A.M.–2:00 P.M.: Discussion of Proposed ACRS Reports (Open)—The Committee will continue its discussion of proposed ACRS reports.

2:00 P.M.–2:30 P.M.: Miscellaneous (Open)—The Committee will discuss matters related to the conduct of Committee activities and matters and specific issues that were not completed during previous meetings, as time and availability of information permit.

Procedures for the conduct of and participation in ACRS meetings were published in the **Federal Register** on September 28, 1999 (64 FR 52353). In accordance with these procedures, oral or written views may be presented by members of the public, including representatives of the nuclear industry. Electronic recordings will be permitted only during the open portions of the meeting and questions may be asked only by members of the Committee, its consultants, and staff. Persons desiring to make oral statements should notify Mr. Sam Duraiswamy, ACRS, five days before the meeting, if possible, so that appropriate arrangements can be made to allow necessary time during the meeting for such statements. Use of still, motion picture, and television cameras during this meeting may be limited to selected portions of the meeting as determined by the Chairman. Information regarding the time to be set aside for this purpose may be obtained by contacting Mr. Sam Duraiswamy prior to the meeting. In view of the possibility that the schedule for ACRS meetings may be adjusted by the Chairman as necessary to facilitate the conduct of the meeting, persons planning to attend should check with Mr. Sam Duraiswamy if such

rescheduling would result in major inconvenience.

Further information regarding topics to be discussed, whether the meeting has been canceled or rescheduled, the Chairman's ruling on requests for the opportunity to present oral statements and the time allotted therefor, can be obtained by contacting Mr. Sam Duraiswamy (telephone 301/415–7364), between 7:30 a.m. and 4:15 p.m., EDT.

ACRS meeting agenda, meeting transcripts, and letter reports are available for downloading or viewing on the internet at http://www.nrc.gov/ACRSACNW.

Videoteleconferencing service is available for observing open sessions of ACRS meetings. Those wishing to use this service for observing ACRS meetings should contact Mr. Theron Brown, ACRS Audio Visual Technician (301–415–8066), between 7:30 a.m. and 3:45 p.m. EDT at least 10 days before the meeting to ensure the availability of this service. Individuals or organizations requesting this service will be responsible for telephone line charges and for providing the equipment facilities that they use to establish the videoteleconferencing link. The availability of videoteleconferencing services is not guaranteed.

The ACRS meeting dates for Calendar Year 2000 are provided below:

ACRS Meeting No. and Meeting Date

— January 2000—No meeting
469 February 3–5, 2000
470 March 2–4, 2000
471 April 6–8, 2000
472 May 11–13, 2000
473 June 7–9, 2000
474 July 12–14, 2000
— August 2000—No meeting
475 August 30—September 1, 2000
476 October 5–7, 2000
477 November 2–4, 2000
478 December 7–9, 2000

Dated: October 7, 1999.

Andrew L. Bates,

Advisory Committee Management Officer.

[FR Doc. 99–26778 Filed 10–18–99; 8:45 am]

BILLING CODE 7590–01–P

NUCLEAR REGULATORY COMMISSION

Sunshine Act Meeting

AGENCY HOLDING THE MEETING: Nuclear Regulatory Commission.

DATE: Weeks of October 11, 18, 25, and November 1, 1999.

PLACE: Commissioners' Conference Room, 11555 Rockville Pike, Rockville, Maryland.

STATUS: Public and Closed.

MATTERS TO BE CONSIDERED:

Week of October 11

Thursday, October 14

11:30 a.m. Affirmation Session (Public Meeting) (if needed).

Week of October 18—Tentative

Wednesday, October 20

9:25 a.m. Affirmation Session (Public Meeting) (if needed).

9:30 a.m. Meeting with Organization of Agreement States (OAS) and Conference of Radiation Control Program Directors (CRCPD) (Public Meeting) (Contact: Paul Lohaus, 301–415–3340).

Thursday, October 21

9:30 a.m. Briefing on Part 35—Rule on Medical Use of Byproduct Material (Public Meeting) (Contact: Cathy Haney, 301–415–6825) (SECY–99–201, *Draft Final Rule—10 CFR Part 35, Medical Use of Byproduct Material*, is available in the NRC Public Document Room or on NRC web site at: ''www.prc.gov/NRC/COMMISSION/SECYS/index.html'' Download the zipped version to obtain all attachments).

Week of October 25—Tentative

There are no meetings scheduled for the Week of October 25.

Week of November 1—Tentative

Thursday, November 4

9:25 a.m. Affirmation Session (Public Meeting) (if needed).

9:30 a.m. Meeting with Advisory Committee on Reactor Safeguards (ACRS) (Public Meeting) (Contact: John Larkins, 301–415–7360).

* The schedule for commission meetings is subject to change on short notice. To verify the status of meetings call (recording)—(301) 415–1292.

CONTACT PERSON FOR MORE INFORMATION: Bill Hill (301) 415–1661.

* * * * *

The NRC Commission Meeting Schedule can be found on the Internet at: http://www.nrc.gov/SECY/smj/schedule.htm.

* * * * *

This notice is distributed by mail to several hundred subscribers; if you no longer wish to receive it, or would like to be added to it, please contact the Office of the Secretary, Attn: Operations Branch, Washington, DC 20555 (301–415–1661). In addition, distribution of this meeting notice over the Internet system is available. If you are interested in receiving this Commission meeting schedule electronically, please send an electronic message to wmh@nrc.gov or dkw@nrc.gov.

Dated: October 8, 1999.

William M. Hill, Jr.,

SECY Tracking Officer, Office of the Secretary.

[FR Doc. 99–26929 Filed 10–12–99; 11:26 am]

BILLING CODE 7590–01–M

OFFICE OF MANAGEMENT AND BUDGET

Office of Information and Regulatory Affairs; Estimating Paperwork Burden

AGENCY: Office of Information and Regulatory Affairs, Office of Management and Budget.

ACTION: Notice of reevaluation of OMB guidance on estimating paperwork burden.

SUMMARY: The Paperwork Reduction Act (PRA) seeks to ensure that Federal agencies balance their need to collect information with the paperwork burden imposed on the public in complying with the collection. Agencies must estimate the burdens that their individual collections impose on the public. The public learns of these burden estimates by PRA notices that agencies publish in the **Federal Register** and with the forms used for collection.

The Office of Management and Budget (OMB) has begun a preliminary reevaluation of its guidance to agencies on estimating and reporting paperwork burden. As part of this effort, OMB seeks comment on how to increase the uniformity, accuracy, and comprehensiveness of agency burden measurement. Based on comments that OMB receives, as well as its experience in evaluating agency burden estimates, OMB will prepare (and seek additional comment on) a more detailed proposal to revise its guidance to agencies on estimating and reporting paperwork burden. OMB will consider comments on its proposal before finalizing its burden guidance.

DATES: Written comments are encouraged and must be received on or before January 12, 2000.

ADDRESSES: Comments should be submitted to the Office of Information and Regulatory Affairs, Office of Management and Budget, New Executive Office Building, Room 10202, 725 17th Street, NW, Washington, DC, 20503. Comments received on this notice will be available for public inspection and copying at the Office of Information and Regulatory Affairs

Docket Library, New Executive Office Building, Room 10102, 725 17th Street, NW, Washington, DC, 20503. To make an appointment to inspect comments, please call (202) 395–6881.

FOR FURTHER INFORMATION CONTACT: Alexander T. Hunt, Policy Analyst, Commerce and Lands Branch, Office of Information and Regulatory Affairs, at (202) 395-7860 or *ahunt@omb.eop.gov*.

SUPPLEMENTARY INFORMATION:

I. Background

Under the 1995 PRA (44 U.S.C. Chapter 35) and OMB's implementing regulations (5 CFR part 1320), we measure PRA paperwork burden in terms of the time and financial resources the public devotes annually to meet one-time and recurring information requests. The term ''burden'' means the ''time, effort, or financial resources'' the public expends to provide information to or for a Federal agency, or otherwise fulfill statutory or regulatory requirements. 44 U.S.C. 3502(2); 5 CFR 1320.3(b). This includes:

- Reviewing instructions;
- Using technology to collect, process, and disclose information;
- Adjusting existing practices to comply with requirements;
- Searching data sources;
- Completing and reviewing the response; and
- Transmitting or disclosing information.

Under the Paperwork Reduction Act, agencies must take into account the burden that their information collections impose on the public. This burden is balanced with the ''practical utility'' of the information to be collected. In earlier decades, when information was maintained manually rather than through automation, paperwork burden could be captured by estimating the ''burden hours'' that an individual, a company, or other entity would have to expend in filling out a form or otherwise responding to an agency collection. Over the succeeding years, as computers and other automated systems have assumed an ever-increasing role in society, paperwork burden has increasingly come to be represented by the financial costs associated with information technology. The financial costs imposed by a Federal collection have been included as ''burden'' in the Paperwork Reduction Act and in OMB's implementing regulations. See 44 U.S.C. 3502(2) (1995 PRA); 44 U.S.C. 3502(3) (1980 PRA); 5 CFR 1320.3(b) (regulations issued in 1995); 5 CFR 1320.7(b) (regulations in effect during 1983–95).

Currently, agencies separately estimate the ''hour burden'' and ''cost burden'' of each particular information collection. This ensures that all types of burden are taken into account, but requires two calculations of burden, one in the form of ''burden hours'' and the other in the form of ''dollars.'' This approach also poses difficulties for evaluating over the years a particular collection's overall burden. For example, as respondents move from manual to automated information processing, a collection's ''hour burden'' would typically decrease. Its ''cost burden'' might increase or decrease, depending on the level of offsetting ''cost burden'' reductions from electronic recordkeeping and reporting. While the use of automation can decrease overall burden, the current reliance on separate categories of burden poses difficulties for arriving at precise comparisons over time of a collection's overall burden. For similar reasons, the current reliance on separate burden categories can sometimes pose difficulties for comparing the overall burden imposed by different collections of information, since collections can involve significantly different mixes of ''hour burden'' and ''cost burden.'' For example, in the case of collections involving household respondents, overall burden would typically consist primarily of ''burden hours.'' In the case of collections involving large business respondents, ''cost burden'' would assume a larger significance, due to the greater reliance on automation.

Given these complexities, agency estimation methodologies can produce imprecise and inconsistent burden estimates. A detailed description and assessment of current burden estimation practices is provided in the FY 1999 Information Collection Budget. See Information Collection Budget of the United States Government, Fiscal Year 1999, Office of Management and Budget, pp. 31–36 (available at *http://www.whitehouse.gov/OMB/inforeg/icb-fy99.pdf*).

II. Burden Measurement

In reevaluating its guidance on estimating burden, OMB has relied on a number of principles:

- Consistency. Burden estimation techniques should be applied consistently to help ensure that a burden hour reported by one agency represents a burden hour equal to that of a burden hour reported by any other agency. Since the value of precise burden estimates increases with the size of information collections, we must use competent professional judgment to balance the thoroughness of the analysis with its practical limits.
- Accuracy. Burden measurement should incorporate recent developments in methodological, data collection, and estimation techniques and reflect changes in the collection, storage, processing, preparation, and transmission of information.
- Integrity. Measurement should provide proper incentives to agencies to undertake initiatives that actually reduce burden, as opposed to initiatives that simply reduce burden estimates. Such measures, for example, would not rely exclusively on proxies for burden, such as the number of lines on a form.
- Sensitivity. A burden measure should allow agencies to assess the impact of ongoing improvements in procedures and customer service that are not measured by current methodologies.
- Comprehensiveness. The measurement of burden must capture all burden (time and out-of-pocket expenses) without double-counting and must reflect the real costs imposed on the public.
- Practicality. Agency personnel must be able to implement measurement methods in a practical and straightforward way.
- Transparency. Improved burden estimates should improve our understanding of the tradeoffs among burden, customer satisfaction, and the utility of collected information.

In relying on these principles, OMB hopes to minimize variation in paperwork burden measurement so that future estimates are more useful in comparing agency inventories and evaluating individual agency and governmentwide performance. It also hopes to improve the comprehensiveness, consistency, and accuracy of burden hour measurement and the way agencies now measure and report out-of-pocket dollar costs. Agencies can continue to report time and financial costs, but estimates of burden hours and financial costs will reflect improved estimation methodologies.

III. Issues for Comment

OMB invites comment generally on all aspects of measuring and reporting paperwork burden. OMB welcomes any suggestions on how to address problems with the current agency practices, as well as recommendations on methodologies to improve estimates of time burden and financial burden. It specifically requests comments on burden measurement options.

Please give particular attention to these issues:

Monetizing Burden Hours. OMB seeks comment on the idea of monetizing the ''burden hour'' calculation by converting a collection's burden hours into a dollar measure of burden. If a dollar-equivalent value is calculated for a given collection's ''burden hours,'' a single estimate—in dollar terms—of the collection's overall burden could be provided by combining the monetized ''burden hour'' calculation with the ''cost burden'' calculation. This approach would raise a number of implementation issues. Two issues deserve particular attention. The first involves improving agency burden accounting practices to resolve salient differences and improve the dollar measure of out-of-pocket expenses. The second issue involves revising OMB guidance to agencies to provide consistency in the measurement of time and financial burden.

One potential benefit of developing a unified dollar measure of burden is that it would be available for cost-effectiveness analysis. Analytically, a dollar measure has the potential to better capture opportunity cost (as explained below), as well as the burden of PRA requirements not easily measured in hours (*e.g.,* recordkeeping). We seek comments on whether this and/or any other potential benefits would outweigh possible negative effects of this approach.

Monetizing burden hours would present a daunting methodological challenge and raises issues concerning certainty and ease of administration by agencies. The key issue would be how to estimate the value of the time devoted by the public to complying with the government's information collection requirements. Monetizing time burden presents different issues when considering information collections from firms versus collections from households. When information is collected from firms, it may be relatively easy to estimate the employee cost associated with responding to the collection. Indeed, some agencies already do this, using, for example, data on wage rates provided by the Bureau of Labor Statistics. The challenge in firm-based collections is primarily one of implementation. In order to assure a meaningful basis for comparison of costs across agencies, it will be necessary to obtain appropriate wage rates.

In estimating the appropriate wage rate, it is critical that the wage be properly ''loaded'' to include overhead and fringe benefit costs associated with the employee's time. For example, although a technical employee's wage may be $20 per hour, she may also receive benefits from her firm such as health and life insurance, paid vacation, and contributions to a retirement plan. To support her work activities, her employer must also purchase office supplies and services, including office space, furniture, heat and air conditioning, electricity, a telephone and telephone service, a personal computer, printer and photocopier access, and various office supplies. These costs need to be accounted for when assessing the overall impact of the Federal information collection on the resources of the respondent.

For household-based collections, the issue is inherently more complex. People are generally not paid a wage for non-work activities that they perform at home. Instead, for burden measurement purposes, the value that people place on their time is usually expressed in economic terms as ''opportunity cost,'' or the value of an activity (for example, spending time with family or developing a new professional skill) that a person would expect to engage in were he or she not occupied in complying with a government reporting requirement. Economic theory suggests that the opportunity cost of giving up an hour of leisure will be equal to the wage foregone from the next hour the individual would have worked. In most cases, this will be the same as the respondent's average wage. In other cases—for example, if the respondent is eligible for overtime pay for her forty-first hour of work in a week—it may be more than the average wage.

Alternatively, to measure the value of leisure time, agencies could observe the actual fees paid by individuals and businesses to others (*e.g.,* paid tax preparers, contractors) to prepare and submit information to the government. This measurement approach is sometimes referred to as ''revealed preference.''

Given the methodological and implementation challenges involved with monetizing burden hours, OMB requests responses to a number of specific questions:

- What are the advantages and disadvantages to trying to monetize burden hours?
- Is monetization worth doing at all?
- Should a single valuation of time (as represented, for example, by a respondent's wage rate or the fee paid to a contractor) be used for all collections, or should it be derived separately for different types of collections? A successful methodology may need to be tailored to individual collections and agencies.
- If the latter, should a single valuation be used for all respondents to a particular collection, or should valuations differ according to respondent characteristics. A successful methodology may need different values of time for collections responded to by individuals in different circumstances.
- Should OMB establish a means for reporting annual burden estimates rather than the three-year average burden estimates that are commonly reported today?

Categories of Burden. OMB also seeks comment on the advantages and disadvantages of expanding the categories of burden that agencies report to OMB. Such an approach could involve dividing estimates of Federal paperwork burden into three categories, with a fourth category representing an aggregate measure of burden. The first two categories, burden hours and financial costs, are used under the current approach, but could be improved using new procedures designed to address problems with burden estimation practices. A possible third category could be burden hours converted, or ''monetized,'' into dollars, depending on resolution of the issue discussed above. A possible fourth category might combine financial costs and monetized burden hours to create, for the first time, a dollar measure of total Federal paperwork burden.

Estimating Burden Hours. Whether or not the categories of burden are expanded, OMB plans to provide guidance to agencies intended to help them improve their estimates of time burden, measured in burden hours. OMB seeks comments specifically on ways to improve current agency hour burden estimation methodologies.

OMB will review and consider all comments received in response to this notice. It will then prepare a draft revised guidance to Federal agencies and provide another opportunity for public comment before issuing final guidance to agencies.

Dated: October 4, 1999.

John T. Spotila,

Administrator, Office of Information and Regulatory Affairs.

[FR Doc. 99–26846 Filed 10–13–99; 8:45 am]

BILLING CODE 3110–01–P

SECURITIES AND EXCHANGE COMMISSION

[Release No. IC–24076; 812–11498]

Stephens Group, Inc. et al.; Notice of Application

AGENCY: Securities and Exchange Commission (''Commission'').

ACTION: Notice of application for permanent order under section 9(c) of the Investment Company Act of 1940 (the ''Act'').

SUMMARY: Applicants request a permanent order exempting them from section 9(a) of the Act with respect to a securities-related injunction entered in 1978.

APPLICANTS: Stephens Group, Inc. (''Stephens''), Stephens Inc. (''SI''), and Jackson T. Stephens (''Mr. Stephens'').

FILING DATE: The application was filed on February 5, 1999, and amended on September 7, 1999.

HEARING OR NOTIFICATION OF HEARING: Interested persons may request a hearing by writing to the Commission's Secretary and serving applicants with a copy of the request, personally or by mail. Hearing requests should be received by the Commission by 5:30 p.m. on November 1, 1999 and should be accompanied by proof of service on applicants in the form of an affidavit or, for lawyers, a certificate of service. Hearing requests should state the nature of the writer's interest, the reason for the request, and the issues contested. Persons who wish to be notified of a hearing may request notification by writing to the Commission's Secretary. An order granting the application will be issued unless the Commission orders a hearing or extends the temporary exemption.

ADDRESSES: Secretary, and Securities and Exchange Commission, 450 Fifth Street, NW, Washington, DC 20549–0609; Applicants, 111 Center Street, Little Rock, AR 72201.

FOR FURTHER INFORMATION CONTACT: Janet M. Grossnickle, Attorney-Adviser, at (202) 942–0526, or Mary Kay French, Branch Chief, at (202) 942–0564, Division of Investment Management, Office of Investment Company Regulation.

SUPPLEMENTARY INFORMATION: The following is a summary of the application. The complete application is available for a fee from the Commission's Public Reference Branch, 450 Fifth Street, NW, Washington, DC 20549–0102 (tel. 202–942–8090).

Applicant's Representations

1. Stephens is an Arkansas corporation formed in 1933. Stephens, directly and through its subsidiaries, engages in a broad-based merchant and investment banking business. Stephens Holding Company (''Stephens Holding''), a wholly owned subsidiary of Stephens, owns SI, a broker-dealer registered under the Securities Exchange Act of 1934 (''Exchange Act'') and an investment adviser registered under the Investment Advisers Act of 1940 (''Advisers Act'').

2. Mr. Stephens served as Stephens' chief executive officer and chairman of the board of directors from 1956 until 1986. Mr. Stephens currently serves as chairman of the board of directors of Stephens and Stephens Holding. Mr. Stephens is not an officer or director of SI.[1]

3. SI has served as principal underwriter and administrator for registered investment companies (''funds'') since 1988. SI currently serves in those capacities for three sets of bank proprietary funds: Stagecoach Funds advised by Wells Fargo Bank, Barclays Global Investor Funds advised by Barclays Global Investors, and Nations Funds advised by NationsBank Advisors, Inc., a wholly-owned subsidiary of Bank of America (collectively, ''Bank Funds''). The Bank Funds include 127 individual funds with total assets in excess of $100 billion.

4. It is anticipated that, in connection with a recent merger between Wells Fargo & Company and Norwest Corporation, certain Stagecoach Funds may be merged with certain funds advised by subsidiaries of Norwest Corporation. In addition, in connection with the merger of BankAmerica and NationsBank, certain of the Pacific Horizon Funds, the propriety funds of BankAmerica, have been merged with Nations Funds. The two mergers are collectively referred to in this notice of the ''Bank Funds Merger.'' SI is serving or will serve as a principal underwriter and administrator to the merged funds.

5. In 1997, Stephens Capital Management, a division of SI, also began serving as a subadviser to Stephens Intermediate Bond Fund, a fund advised by Diversified Investment Advisors, Inc. (''Subadvised Fund''). The Subadvised Fund has approximately $25 million in assets.

6. On March 18, 1978, Stephens and Mr. Stephens consented to judgments of permanent injunction issued by the U.S. District Court for the District of Columbia in a matter brought by the Commission (''1978 Injunction'').[2] The Commission alleged that Stephens and Mr. Stephens acted as part of a group of persons, within the meaning of section 13(d) of the Exchange Act, for the purpose of acquiring, holding or disposing of the common stock of Financial General BankShares Inc., a bank holding company, and did not make the filings required by section 13(d) of the Exchange Act. In consenting to the 1978 Injunction, Stephens undertook, among other things, to implement and maintain certain procedures designed to prevent future violations of section 13(d) of the Exchange Act. SI disclosed the 1978 Injunction on both its Form ADV filed under the Advisers Act and Form BD filed under the Exchange Act.[3]

7. Applicants state that they did not seek an order under section 9(c) around the time of the 1978 Injunction because SI did not begin to engage in any fund-related activities until 1988. Applicants also state that they did not become aware of the section 9(a) violation until late November 1998, when the violation was discovered by counsel in preparation for the Bank Funds Merger.

8. Since the 1978 Injunction, Stephens has been involved in a number of securities related administrative proceedings with the Commission, state securities regulators and self-regulatory organizations. Three of these proceedings involved SI's investment advisory and fund-related activities. In 1997, SI consented to the imposition of a cease-and-desist order by the Commission that found, among other things, that SI violated the Advisers Act by failing to provide its clients with adequate disclosure concerning principal transactions in securities.[4] In 1996, SI entered into a consent order with the National Association of Securities Dealers, Inc. (''NASD'') accepting, among other things, a finding by the NASD that SI failed to exercise reasonable supervision over its representatives in connection with wholesale marketing of two closed-end funds.[5] In 1995, entered into an administrative settlement order with the Securities Division of the Massachusetts Secretary of State in connection with SI's failure not to sell shares of an open-end fund to 23 purchasers in Massachusetts prior to registration in Massachusetts.[6] Applicants state that none of the other administrative proceedings, all of which are listed in an exhibit to the application, involved

[1] Mr. Stephens is a registered representative with SI and would be considered an employee and associated person of SI.

[2] *SEC.* v. BCCI, et al. (U.S.D.Ct., D.C. Mar. 18, 1978) (Final Judgment of Permanent Injunction and Other Equitable Relief).

[3] In 1980, Stephens and Mr. Stephens also sought and received relief from the Commission removing a bar arising from the 1978 Injunction on their ability to rely on Regulation A under the Securities Act of 1933. Letter from George A. Fitzsimmons, Secretary. SEC to Larry W. Burks (Nov. 17, 1980).

[4] Advisers Act Release No. 1666 (Sept. 16, 1997).

[5] Letter of Acceptance, Waiver and Consent No. C059600 (Oct. 14, 1996).

[6] In the Matter of Stephens, Inc., No. E–94–108 (Feb. 16, 1995) (settlement order).

Stephens' investment advisory or fund-related activities.

Applicants' Legal Analysis

1. Section 9(a) of the Act, in relevant part, prohibits a person who has been enjoined from engaging in or continuing any conduct or practice in connection with the purchase or sale of a security from acting, among other things, as a principal underwriter or investment adviser for a registered investment company. Applicants state that, as result of the 1978 Injunction, Stephens and Mr. Stephens may be prohibited by section 9(a) from serving underwriter or investment adviser to funds.

2. Section 9(c) of the Act provides the Commission shall grant an application for an exemption from the disqualification provisions of section 9(a) if it is established that these provisions, as applied to the applicant, are unduly or disproportionately severe or that the conduct of applicant has been such as not to make it against the public interest or the protection of investors to grant the application.

3. Applicants seek a permanent order under section 9(c) with respect to the 1978 Injunction to permit SI to continue to serve as principal underwriter and investment adviser to funds, including the Bank Funds and the Subadvised Fund.[7] As noted above, applicants state that they did not seek an order under section 9(c) around the time of 1978 Injunction because SI did not begin to engage in any fund-related activities until 1988. Applicants also state that they did not become aware of the section 9(a) violation until late November 1998, when the violation was discovered by counsel in preparation from the Bank Funds Merger.

4. SI has undertaken to develop procedures designed to prevent violations of section 9(a) by SI and its affiliated persons. Further, SI's general counsel has attested that he has reviewed SI's compliance policies and procedures relating to compliance with section 9(a); that he reasonably believes that the policies and procedures have been fully implemented; and that the policies and procedures are designed reasonably to prevent violations of section 9(a) by SI and its affiliated persons.

5. Applicants state that the prohibitions of section 9(a) as applied to them would be unduly and is proportionately severe. Applicants assert that SI's ability to act as a principal underwriter to the Bank Funds and as a subadviser to the Subadvised Fund would result in the Funds and their shareholders facing potentially severe hardships. Applicants state that the Bank Funds would incur significant time, effort and expense to replicate the extensive selling network established by SI, and the disruption may have a significant effect on the management and expense ratios of the Bank Funds. Applicants also state that the Subadvised Fund would face similar consequences if required to change the subadviser. Applicants assert that representatives of the Band Funds and the Subadvised Funds have expressed satisfaction with the services provided by SI and a desire that SI continue to provide the services.

6. Applicants state that the boards of directors, including the disinterested directors, of the Bank Funds and the Subadvised Funds (''Boards'') have been apprised of Stephens's section 9(a) violation. Applicants represent that the Boards have determined that retaining SI as a principal underwriter (in the case of Bank Funds) or as a subadviser (in the case of the Subadvised Fund) is in the best interests of the Funds and their shareholders. Applicants further represent that the boards of directors of the funds with which certain of the Bank Funds are expected to merge considered the 1978 Injunction in determining whether to approve the proposed mergers.

7. Applicants assert that if SI were prohibited from providing services to the Bank Funds and the Subadvised Fund, the effect on SI's business and employees would be severe. Applicants state that SI has committed substantial resources over the past 10 years to establishing expertise in servicing funds, has developed extensive selling networks, and has over 80 employees dedicated to providing fund distribution and subadvisory services.

8. Applicants state that Mr. Stephens has at no time in the past been involved in SI's fund-related activities and will not be involved in that business in the future. Applicants also note that one of the conditions to the requested relief provides that Mr. Stephens will not be involved in SI's business of providing services to funds, and requires applicants to develop appropriate procedures.

9. Applicants also assert that their conduct has been such as not to make it against the public interest or the protection of investors to grant the exemption from section 9(a). Applicants note that over 20 years have passed since the 1978 Injunctions. Applicants also note that the 1978 Injunction did not in any way involve fund-related activities. Applicants further state that since the 1978 Injunction, neither SI nor any affiliated persons of SI has engaged in conduct that would result in disqualification under section 9(a) of the Act.

10. Applicants assert that SI has implemented policies and procedures designed to improve its securities law compliance. In addition, SI represents that it is taking, or has taken, the following specific actions. To the extent certain of these actions have not been completed yet, SI represents that they will be completed as soon as practicable.

a. Review and Modification of Compliance Policies and Procedures. The Legal and Compliance Departments are in the process of reviewing and updating SI's existing compliance policies and procedures, including policing and procedures related to its mutual fund distribution, administration and advisory operations. As part of this review, as appropriate, new policies and procedures are being designed and implemented; unneeded policies and procedures are being eliminated; and any inconsistencies among existing policies and procedures are being eliminated. The compliance policies and procedures are being consolidated into ''user-friendly'' manuals or LAN based systems (''Compliance Manuals''). Checklists, guidelines, worksheets, closing certificates and similar documents are being prepared to guide operating and compliance personnel in following compliance policies and procedures and in documenting compliance. SI is in the process of filling a newly-created compliance position, that will involve overseeing particular policies and procedures and ensuring that they are implemented and followed.

b. Reporting and Periodic Review. SI has adopted procedures that require its Legal and Compliance Departments to report to senior management of SI and its board of directors at regular intervals on the compliance program. These policies require the Legal and Compliance Departments, with the assistance of outside counsel and

[7] On February 5, 1999, the Commission simultaneously issued a notice of the filing of the application and a temporary conditional order exempting applicants from section 9(a) of the Act until April 5 1999. *Stephens Groups, Inc., et al.,* Investment Company Act Release No. 23682 (Feb. 5, 1999). On April 2, 1999, the Commission issued an order extending the temporary exemption until August 5, 1999. *In the Matter of Stephens Group Inc., et al.,* Investment Company Act Release No. 23769 (Apr. 2, 1999). On August 5, 1999, the Commission issued an order extending the temporary exemption until the date on which the Commission takes final action on the application for a permanent order exempting applicants from section 9(a) of the Act or, if earlier, November 5, 1999. *In the Matter of Stephens Group Inc., et al.,* Investment Company Act Release No. 23935 (Aug. 5, 1999).

compliance consultants, as appropriate, to conduct periodic reviews and evaluations of the compliance policies and procedures, as well as the operation of the compliance program as a whole. The Compliance Manuals will be promptly updated to reflect any necessary changes resulting from these reviews.

c. Compliance Documentation. SI is in the process of adopting procedures to document, on an ongoing basis, the procedures to be followed by Compliance Department personnel in performing particular functions; the actions to be taken by Compliance Department personnel as a result of following the procedures; and the actions to be taken by Legal and Compliance Department personnel and management to enforce the compliance policies and procedures. These policies will require compliance documentation to be prepared in a manner to facilities regulatory review of the factual background of the transactions or matters at issue, as well as the actions taken by SI's personnel.

d. Compliance Training. SI has commenced, and will continue to conduct, training on a firm-wide and departmental basis to ensure that its employees understand the purposes and functions of the compliance policies and procedures.

e. Professional Conduct Program. SI has developed, and is in the process of adopting, a professional conduct code and supporting infrastructure, including the assignment of senior management and Legal Department personnel to design, implement and oversee SI's professional conduct program (''Professional Conduct Program''). Under the Professional Conduct Program, SI will conduct comprehensive yearly professional conduct training. SI is in the process of implementing employee assistance procedures, that will be administered by third-party vendors and senior Legal Department personnel, to answer employee questions and address grievances. Once the Professional Conduct Program is adopted, SI will conduct periodic review and evaluation of the program with a view to enhancing and strengthening it.

Applicant's Conditions

Applicants agree that the following conditions may be imposed in any order granting the requested relief:

1. Mr. Stephens will not be involved in SI's business of providing services to register investment companies. Applicants will develop procedures designed reasonably to assure compliance with this condition.

2. For each to the three fiscal years beginning with the fiscal year ending December 31, 1999, SI's general counsel will certify annually that, after reasonable inquiry, he believes that SI has complied with its compliance procedures and policies in all material respects (and that any known material deviations from these policies and procedures, and any series of like deviations that in the aggregate are material, have been documented in SI's records), and that the procedures and policies continue to be reasonably designed to ensure SI's compliance with the federal securities laws. The certification will be delivered to the Commission to be attention of the Assistant Director, Office of Investment Company Regulation, Division of Investment Management, within 60 days of the end of SI's fiscal year. A copy of the certification will be maintained as part of the permanent records of SI and a copy of each certification will be delivered to the board of directors of each fund for which SI serves as distributor, underwriter, administrator or investment adviser.

By the Commission.

Margaret H. McFarland,

Deputy Secretary.

[FR Doc. 99–26792 Filed 10–13–99; 8:45 am]

BILLING CODE 8010–01–M

SECURITIES AND EXCHANGE COMMISSION

[Release No. 34–41971; File No. SR–NASD–99–21]

Self-Regulatory Organizations; Order Approving a Proposed Rule Change by the National Association of Securities Dealers, Inc. To Create a Dispute Resolution Subsidiary

September 30, 1999.

On April 26, 1999, the National Association of Securities Dealers, Inc. (''NASD'' or ''Association''), through its wholly owned regulatory subsidiary, NASD Regulation, Inc. (''NASD Regulation''), submitted to the Securities and Exchange Commission (''Commission''), pursuant to section 19(b)(1) of the Securities Exchange Act of 1934 (''Act'') [1] and Rule 19b–4 thereunder,[2] a proposed rule change to create a dispute resolution subsidiary. The proposed rule change was published for comment in the **Federal Register** on June 17, 1999.[3] The Commission received one comment letter on the proposal from the Securities Industry Association (''SIA'').[4] This order approves the proposal.

I. Description of the Proposal

The Association is proposing (i) to create a dispute resolution subsidiary, NASD Dispute Resolution, Inc. (''NASD Dispute Resolution''), to handle dispute resolution programs; (ii) to adopt by-laws for the subsidiary; and (iii) to make conforming amendments to the Plan of Allocation and Delegation of Functions by NASD to Subsidiaries (''Delegation Plan''), the NASD Regulation By-Laws, and the Rules of the Association.

A. Background

The Association's arbitration and mediation programs were operated by the NASD Arbitration Department until 1996, when those functions were moved to NASD Regulation following a corporate reorganization. This reorganization in part grew out of recommendations of a Select Committee formed by the NASD and made up of individuals with significant experience in the securities industry and NASD governance (''the Rudman Committee'').[5] The Rudman Committee reviewed the Association's arbitration and mediation programs from December 1994 through August 1995. The Rudman Report was issued in September 1995.

In September 1994, the NASD established the Arbitration Policy Task Force, headed by David S. Ruder, former Chairman of the SEC (''the Ruder Task Force''), to study NAD arbitration and recommend improvements. The Ruder Task Force, composed of eight persons with various backgrounds in the area of securities arbitration, met from the Fall of 1994 to January 1996, when its Report was issued.[6]

Both the Rudman Committee and the Ruder Task Force made recommendations that affected the arbitration program. The Rudman Committee recommended that the NASD reorganize as a parent corporation with two relatively autonomous and strong operating subsidiaries, independent of one another. The resulting enterprise would consist of NASD, Inc., as parent, The Nasdaq Stock Market, Inc. (''Nasdaq'') as

---

[1] 15 U.S.C. 78s(b)(1).

[2] 17 CFR 240.19b–4.

[3] *See* Securities Exchange Act Release No. 41510 (June 10, 1999), 64 FR 32575.

[4] Letter from Stephen G. Sneeringer, Chairman of the Arbitration Committee, SIA, to Jonathan G. Katz, Secretary, Commission, dated July 8, 1999 (''SIA Letter'').

[5] *Report of the NASD Select Committee on Structure and Governance to the NASD Board of Governors* (September 1995) (''Rudman Report'').

[6] *Report of the Arbitration Policy Task force to the Board of Governors National Association of Securities Dealers, Inc.* (January 1996) (''Ruder Report'').

one subsidiary to operate Nasdaq, and a new subsidiary, NASD Regulation, Inc., to regulate the broker-dealer members of the NASD.[7] The Ruder Report recommended that the dispute resolution program be housed either in the parent or in NASD Regulation.[8] The Arbitration Department was placed in NASD Regulation in early 1996 based on the recommendation of the Rudman Committee,[9] and the name of the department was changed to the Office of Dispute Resolution (''ODR'') shortly thereafter, to reflect the full range of dispute resolution mechanisms.

The NASD believes that ODR has established credibility as a neutral forum that is fair to all parties and has gained acceptance by investor groups. However, because there are significant differences between the disciplinary role of NASD Regulation and the sponsorship of a neutral forum for the resolution of dispute between members, associated persons, and customers, the NASD believes that creation of a separate dispute resolution entity will further strengthen the independence and credibility of its arbitration and mediation functions. A new dispute resolution subsidiary should benefit from the perception that it is separate and distinct from other NASD entities. The new subsidiary will be subject to the same SEC oversight as other parts of the NASD enterprise, which includes regular inspections by the Commission and the need to file all by-laws and rule changes with the SEC. In addition, the new subsidiary will remain subject to inspections by the General Accounting Office (''GAO''), which performs audits at the request of Congress.

The NASD proposes to call the new subsidiary NASD Dispute Resolution, Inc. Together with NASD Regulation, the two subsidiaries will form the NASD Regulatory and Dispute Resolution Group. Both the NASD directly, and NASD Regulation, indirectly, will be responsible for the actions of NASD Dispute Resolution. Because NASD Dispute Resolution performs its functions through authority delegated by the NASD, the NASD is responsible for proper performance of such functions. Indirectly, NASD Regulation will be responsible for enforcing compliance with decisions rendered by NASD Dispute Resolution concerning NASD members.[10]

Staffing for NASD Dispute Resolution will be the same as ODR, except for the creation of a President position. Certain additional executive positions, if necessary, may be created as well. Many functions of the new subsidiary, such as human resources, legal, finance, communications, administrative services, and technology will be shared with the NASD and other subsidiaries to avoid duplication. The new subsidiary will be charged for the cost of those functions as it presently is.

Funding for the new subsidiary will be handled in much the same way as presently handled for ODR, which is not self supporting. Fees received from parties who use the arbitration and mediation programs are not sufficient to fund the Office's regular actitivies. Rather, as a part of NASD Regulation, ODR shares in the revenue stream of the NASD and its affiliated entities, which includes revenue derived from member assessments, various fees and charges, disciplinary fines, and other sources of income. In return, ODR is charged for services that it receives from the other corporations in the enterprise as described above. Apart from accounting changes to reflect the new subsidiary's status, the funding process for the new subsidiary will be the same as that for ODR. ODR employees will continue in the same positions in the new subsidiary, and the physical offices will not move.

The NASD proposes a five-person Board for NASD Dispute Resolution, consisting of three non-industry and two industry directors, as those terms are defined in Article I of the proposed By-Laws. The Chief Executive Officer of the NASD will be an ex-officio non-voting member of the Board. The non-industry directors would include at least two persons who also are members of the NASD Board of Governors (''NASD Board''), and an additional person knowledgeable in the dispute resolution field. At least one of the non-industry directors also will qualify as a public director, as defined in the By-Laws. One industry director would be a member of the NASD Board; the other would be the President of the new subsidiary. The NASD Board would elect the directors, as is done for the boards of the other subsidiaries.

The procedures currently in place for disciplining members and associated persons for noncompliance with arbitration awards will be largely the same. The Code of Arbitration Procedure (''Code''), in IM–10100, provides that the failure of a member or associated person to comply with an arbitration award obtained in connection with an arbitration submitted for disposition pursuant to the procedures specified by the NASD, other self-regulatory organizations, or the American Arbitration/Association[11] may be deemed conduct inconsistent with just and equitable principles of trade and a violation of NASD Rule 2110. This language presently applies to awards obtained in the NASD Regulation forum, because that forum applies rules and procedures that are ultimately approved by the NASD. This will also be the case for NASD Dispute Resolution. Enforcement of the Code will continue to be handled by NASD Regulation.

As is the case with actions by NASD Regulation, actions by the NASD Dispute Resolution Board may be referred by that board to the NASD Board, or reviewed by the NASD Board, as provided in the proposed amendments to the Delegation Plan.[12] Thus, the rules of NASD Dispute Resolution will be the rules of the Association, just as rules approved currently by the other subsidiaries and subject to NASD Board review are deemed to be NASD rules. NASD Regulation has formed a working group with representatives from various departments to ensure a smooth transition.

B. Description of Proposed Amendments

The Association proposes to amend the Delegation Plan to add references to the new subsidiary and to move the arbitration and mediation functions from NASD Regulation to NASD Dispute Resolution. Therefore, references to the delegations of authority to the subsidiaries and the rulemaking decisions of the subsidiaries have been amended to include references to NASD Dispute Resolution. As is the case for NASD Regulation and Nasdaq, actions of the new subsidiary Board will be subject to review by the NASD Board, and rule filings will be made by the new subsidiary on behalf of the NASD.

The description of the National Arbitration and Mediation Committee (''NAMC'') in the Delegation Plan has been moved from the section delegating authority to NASD Regulation to a new NASD Dispute Resolution section. A

[7] Rudman Report at R–8.

[8] Ruder Report at 151–52.

[9] Rudman Report at R–8.

[10] *See* Section A.1.f. of the Delegation Plan.

[11] The NASD Regulation Board of Directors recently approved an amendment to this Interpretive Material that would add, ''or other dispute resolution forum selected by the parties.'' *See* Securities Exchange Act Release No. 41339 (April 28, 1999), 64 FR 23887 (May 4, 1999). This proposal was filed as a non-controversial filing. The NASD designated May 17, 1999 as the effective date of the proposal.

[12] the Delegation Plan was amended in 1997, together with related By-Laws changes designed to allow the NASD Board to take action on its own initiative rather than waiting for a subsidiary to act on the matter. *See* Securities Exchange Act Release No. 39326 (Nov. 14, 1997), 62 FR 62385 (Nov. 21, 1997).

change has been made in the NAMC member balancing requirement to provide more flexibility while maintaining at least 50% non-industry membership. The Delegation Plan currently provides that NAMC membership shall be equally balanced between industry and non-industry members. It may be desirable, however, to have an odd number of members on the NAMC to avoid tie votes. Therefore, the provision has been amended to state that the NAMC shall have at least 50% non-industry members. This provides additional flexibility while maintaining a minimum of half non-industry members, in accordance with the spirit of the Delegation Plan.

The Association proposes to amend the NASD Regulation By-Laws to add references to NASD Dispute Resolution in the definitions sections.[13]

Rule 0120(b) will be amended to clarify that the term ''Association'' collectively means the NASD and its subsidiaries that are considered part of the self-regulatory organization: that is, the NASD, NASD Regulation, Nasdaq, and NASD Dispute Resolution.

Rule 10102(a) of the Code of Arbitration procedure will be amended to clarify that the new NASD Dispute Resolution Board will appoint members of the NAMC and name its chair. In addition, Rule 10102(a) will be amended to replace the phrase ''a pool of arbitrators'' with the more accurate phrase ''rosters of neutrals,'' since the current rosters include both arbitrators and mediators (collectively referred to as ''neutrals'').

Rule 10102(b) will be amended to conform to current practice, in which the NAMC recommend to the Board certain rules and procedures to govern the conduct of arbitration and mediation matters, and does not unilaterally make such changes. The rule currently authorizes the NAMC to establish these rules and procedures. In addition, the phrase ''NASD Dispute Resolution'' has been added before ''Board'' to clarify that recommendations will be made to that Board. As noted above, actions of the new subsidiary board will be subject to review by the NASD Board.

Rule 10401 will be amended to replace the phrase ''by the Association'' with regard to designation of the Director of Mediation and replace it with ''by the NASD Dispute Resolution Board,'' and to delete ''Association's'' as a modifier of ''National Arbitration and Mediation Committee.'' Although the NASD and its subsidiaries are collectively referred to as the Association for self-regulatory purposes, the use of ''Association'' in this Rule may cause confusion in light of the new corporate structure and serves no useful purpose in the Rule. The term ''of Arbitration'' will be added after one instance of the word ''Director'' to distinguish it from the Director of Mediation. In addition, the reference to the ''Board of Governors'' has been changed to ''NASD Dispute Resolution Board'' to reflect the new structure.

Rule 10404 will be amended to change the term ''NASD'' to ''Association'' to be more inclusive in this instance because, as described above, the term ''Association'' refers to the entire self-regulatory organization including subsidiaries.

The proposed NASD Dispute Resolution By-Laws are modeled after those of NASD Regulation, with certain modifications, described below, appropriate to the particular functions of NASD Dispute Resolution. For example, NASD Dispute Resolution will not require that a committee other than the NAMC review all rulemaking proposals. Standard provisions allowing for the appointment of an Executive Committee and a Finance committee have been included for flexibility, although it is not immediately expected that such committees will be needed.

Proposed Article IV, Section 4.2 sets the number of Board members at five to eight although, as stated above, the intention initially is to have only five Board members. In addition, the Chief Executive Officer of the NASD will be an ex-officio non-voting member of the Board. Proposed Section 4.3(a) provides that the number of non-industry directors shall equal or exceed the number of industry directors plus the President. This means that the President is treated as an industry director for this purpose. The other industry director and at least two of the non-industry directors also will be sitting members of the NASD Board. This overlapping membership provides stability and uniformity among the corporations. At least one of the non-industry directors also will qualify as a public director. The proposed By-Laws define ''Public Director'' as a director who has no material business relationship with a broker or dealer or the NASD, NASD Regulation, Nasdaq, or NASD Dispute Resolution. The By-Laws define ''Non-Industry Director'' as a director (excluding the President) who is (1) a public director or public committee member; (2) an officer or employee of an issuer of securities listed on Nasdaq or Amex, or traded in the over-the-counter market; or (3) any other individual who would not be an industry director or industry committee member.

A minor modification was made to the standard terminology in Section 4.13(h) to clarify that the Board may appoint a non-director to a committee, because this power is implied but not specifically stated in the preceding paragraphs of Section 4.13.

II. Comments

The Commission received one comment letter from the SIA,[14] which opposed the proposed rule change. The SIA disagreed with (i) the proposed composition of the NASD Dispute Resolution Board; (ii) the proposed composition of the NAMC; and (iii) the manner in which fees will be imposed by NASD Dispute Resolution.

The SIA had three concerns about the composition of the NASD Dispute Resolution Board. First the SIA stated that industry and non-industry representation should be equal. Second, the SIA noted that it is inappropriate to consider the president of NASD Dispute Resolution as an industry representative. Third, the SIA stated that the proposed compositional breakdown might permit the NASD Dispute Resolution Board to be dominated by claimants' lawyers. The SIA recommended that the Commission exclude from the definition of Non-Industry ''anyone who provides professional legal services to investor-claimants and whose revenues in that regard constitute more than 20% of his or her gross annual revenue.'' [15]

Similarly, the SIA expressed concern about the proposed composition of the NAMC. It stated its position that industry and non-industry representation on the NAMC should be equal rather than at least 50 percent non-industry. The SIA stated that the ''amorphous concern that they may be a tie vote * * * does not outweigh the more paramount concern that the representation on the NAMC be truly balanced between Industry and Non-Industry representatives.'' [16]

In addition to the composition of the NAMC and the NASD Dispute Resolution Board, the SIA commented on the manner in which fees will be imposed under the proposed rule change. The SIA objected to the dichotomy between fees affecting members and those affecting non-members. Under the proposed rule change, the NASD Board must ratify any rule change adopted by the NASD

[13] The NASD also intends to review the NASD and Nasdaq By-Laws and other corporate governance documents to identify other appropriate amendments recognizing the formation of NASD Dispute Resolution.

[14] *See supra*, note 4.

[15] SIA Letter at 4.

[16] SIA Letter at 4–5.

Dispute Resolution Board that imposes fees or other charges on person or entities other than NASD members. Rule changes that impose fees on NASD members do not require NASD Board ratification. The SIA stated that industry participants ''should have the opportunity to participate in critical decisions that will impact their business and their bottom line—such as fee increases related to the arbitration system.'' [17]

NASD Regulation responded to the SIA's concerns about the proposed composition of the NASD Dispute Resolution Board, the proposed composition of the NAMC, and the manner in which fees will be imposed by NASD Dispute Resolution.[18] First, with respect to the composition of the NASD Dispute Resolution Board, NASD Regulation noted that this proposal is consistent with NASD Regulation's bylaws, which require a majority of non-industry members on its Board and its President and Nasdaq's President are also counted as industry participants for compositional and quorum requirements.[19] Second, with respect to the composition of the NAMC, NASD Regulation noted that the NAMC's recommendations are only advisory and that rule changes and major policy changes must be presented to the NASD Dispute Resolution Board for final approval.[20] Third, with respect to NASD Dispute Resolution's authority to impose fees on NASD members without prior review and ratification by the NASD Board, NASD Regulation noted that fee proposals must be submitted for Commission review and that the NASD may, on its own initiative, review any action of its subsidiaries.[21]

III. Discussion

The Commission finds that the proposed rule change is consistent with section 15A(b) of the Act [22] in general and furthers the objectives of section 15A(b)(6) [23] in particular, in that it is designed to prevent fraudulent and manipulative acts and practices, to promote just and equitable principles of trade, and to protect investors and the public interest.[24] Specifically, the Commission believes that separating the dispute resolution role from the disciplinary role of NASD Regulation will result in a more neutral and independent forum for the resolution of disputes between members, associated persons, and customers. The Commission also expects the NASD to ensure that NASD Dispute Resolution is adequately funded and able to fulfill its responsibilities.

In its comment letter, the SIA stated that industry and non-industry representation on the NASD Dispute Resolution Board and the NAMC should be equal and that the President of NASD Dispute Resolution should not be considered an industry representative. The Commission notes that NASD Dispute Resolution's Board structure is modeled after NASD Regulation's structure. Nasdaq also requires a majority of non-industry directors on its Board. Moreover, the Presidents of both NASD Regulation and Nasdaq are counted as industry participants for board composition and quorum requirements. The Commission believes that it is reasonable to extend this structure to NASD Dispute Resolution.

The SIA also stated that the NASD Dispute Resolution Board may include too many claimants' lawyers, thus permitting domination by a single NASD Dispute Resolution constituency. The Commission disagrees, noting that at least two of the non-industry directors will come from the NASD Board. As characterized by the SIA in its comment letter, the current non-industry members of the NASD Board are senior executives from major corporations with no particular affiliation with the securities industry. Moreover, if NASD Dispute Resolution has a five member Board, only one non-industry director may be chosen from outside the NASD Board. While that director should be knowledgeable in the dispute resolution field, the universe of potential candidates is not limited to claimants' lawyers. Indeed, it is likely that the remaining non-industry position would be filled by a practicing arbitrator, a mediator, or an academic. Accordingly, the Commission does not believe that there is an undue risk that the NASD Dispute Resolution Board will be dominated by an single constituency of the new subsidiary.

The SIA also stated that the NASD Board should be required to ratify rule changes adopted by the NASD Dispute Resolution Board if the rule change imposes fees or other charges on NASD members as well as those affecting non-members. The Commission notes that rule changes by the NASD Regulation and Nasdaq Boards imposing fees or other charges on NASD members do not require ratification by the NASD Board. The Commission also notes that fee proposals must be submitted for Commission review under Rule 19b–4 under the Act. In addition, any member of the NASD Board may call an action of a subsidiary for review at the next NASD Board meeting following the subsidiary's action. The Commission believes these measures provide an adequate safeguard against unreasonable fees being levied against NASD members.

Finally, the Association represents that funding for the new subsidiary will be handled in much the same way as funding for ODR was accomplished. The new subsidiary will share in the revenue stream of the NASD and its affiliated entities, which includes revenue derived from member assessments, various fees and charges, disciplinary fines, and other sources of income. As the new subsidiary is implemented, we expect the NASD to commit to ensuring that NASD Dispute Resolution continues to be properly funded to carry out all its responsibilities.

IV. Conclusion

It Is Therefore Ordered, pursuant to section 19(b)(2) of the Act,[25] that the proposed rule change (SR–NASD–99–21) is approved.

For the Commission, by the Division of Market Regulation, pursuant to delegated authority.[26]

Margaret H. McFarland,

Deputy Secretary.

[FR Doc. 99–26793 Filed 10–13–99; 8:45 am]

BILLING CODE 8010–01–M

[17] SIA Letter at 5.

[18] Letter from Jean I. Feeney, Assistant General Counsel, NASD Regulation, to Richard C. Strasser, Assistant Director, Commission, dated August 11, 1999.

[19] *Id.* at 2.

[20] *Id.* at 4.

[21] *Id.*

[22] 15 U.S.C. 78*o*–3(b).

[23] 15 U.S.C. 78*o*–3(b)(6).

[24] In approving this rule, the Commission has considered the proposed rule's impact on efficiency, competition, and capital formation. 15 U.S.C. 78c(f).

[25] 15 U.S.C. 78s(b)(2).

[26] 17 CFR 200.30–3(a)(12).

SMALL BUSINESS ADMINISTRATION

[Declaration of Disaster #3220]

State of Florida; Amendment #1

The above-numbered declaration is hereby amended to include Marion County, Florida as a contiguous county as a result of damages caused by Hurricane Floyd that occurred September 13–15, 1999.

All other information remains the same, i.e., the deadline for filing applications for physical damage is November 26, 1999 and for economic injury the deadline is June 27, 2000.

(Catalog of Federal Domestic Assistance Program Nos. 59002 and 59008)

Dated: October 4, 1999.

Aida Alvarez,

Administrator.

[FR Doc. 99–26784 Filed 10–13–99; 8:45 am]

BILLING CODE 8025–01–P

SOCIAL SECURITY ADMINISTRATION

Agency Information Collection Activities: Proposed Request

In compliance with Public Law 104–13, the Paperwork Reduction Act of 1995, SSA is providing notice of its information collections that require submission to the Office of Management and Budget (OMB). SSA is soliciting comments on the accuracy of the agency's burden estimate; the need for the information; its practical utility; ways to enhance its quality, utility and clarity; and on ways to minimize burden on respondents, including the use of automated collection techniques or other forms of information technology.

The information collections listed below will be submitted to OMB within 60 days from the date of this notice. Therefore, comments and recommendations regarding the information collections would be most useful if received by the Agency within 60 days from the date of this publication. Comments should be directed to the SSA Reports Clearance Officer at the address listed at the end of the notices. You can obtain a copy of the collection instruments by calling the SSA Reports Clearance Officer on (410) 965–4145, or by writing to him.

1. Worker Compensation Letter, SSA–L1708; Worker Compensation Questionnaire, SSA–1708–0960–NEW. A review of SSA records revealed that beneficiaries receiving disability benefits, who were first placed in workers compensation offset, have an extremely high potential for payment error, because an increase in or expiration of workers compensation was not reported for/by such beneficiaries. Therefore, SSA is proposing to test a new form that collects information on changes in WC status. The information collected will be used to evaluate whether this is an effective method of detecting changes in workers compensation payments and determining payment accuracy. The respondents are a random sample of beneficiaries receiving disability benefits with workers compensation offset.

Number of Respondents 200.

Frequency of Response 1.

Average Burden Per Response 10 minutes.

Estimated Annual Burden 33 hours.

2. Payee Interview, SSA–835; Beneficiary Interview, SSA–836; Custodian Interview, SSA–837–0960–0588. SSA is conducting a three-tier review process of the representative payee program. As part of this review process, SSA will conduct interviews with title II Disability Insurance and title XVI Supplemental Security Income recipients and their representative payees. The information obtained on the interview forms will be used to assess the effectiveness of the policies and procedures that govern the postentitlement selection and appointment of the approximately 7 million payees in the title II and title XVI programs.

	SSA–835	SSA–836	SSA–837
Number of Respondents	1,000	500	190
Frequency of Response	1	1	1
Average Burden Per Response (Minutes)	20	15	10
Estimated Annual Burden (Hours)	333	125	32

Social Security Administration, DCFAM, Attn: Frederick W. Brickenkamp, 6401 Security Blvd., 1–A–21 Operations Bldg., Baltimore, MD 21235.

Dated: October 7, 1999.

Frederick W. Brickenkamp,

Reports Clearance Officer, Social Security Administration.

[FR Doc. 99–26729 Filed 10–13–99; 8:45 am]

BILLING CODE 4191–02–P

SOCIAL SECURITY ADMINISTRATION

Disability Research Institute Request for Applications (RFA) (Program Announcement No. SSA–ORES–00–1)

AGENCY: The Office of Research, Evaluation, and Statistics (ORES), Office of Policy, Social Security Administration (SSA).

ACTION: Request for applications for a cooperative agreement to establish a Disability Research Institute (DRI).

SUMMARY: The Social Security Administration's disability programs play a vital role in society, paying benefits to over 8 million disabled individuals. It is essential that the nation invest in research designed to examine the disability programs and ensure that these programs are designed effectively to improve the lives of disabled Americans. The Social Security Administration plans to establish a Disability Research Institute (DRI). This institute would help fill the need for more extensive research in the disability area for policymakers around the country. The DRI is an important initiative on the part of SSA's Office of Policy to strengthen the Agency's research capacity since it became independent in 1995.

Authorized under section 1110 of the Social Security Act, SSA announces the solicitation of applications for a cooperative agreement to create a DRI in order to inform the public and policymakers about disability policy alternatives and their consequences. Initially, we anticipate the Institute will be one, university-based, multi-disciplinary center. The Institute will have an annual budget consisting of $1.25 million for the first year and $1 million per year for subsequent years. SSA expects to fund this Institute for a period of 5 years, contingent upon a successful annual review process, continued funding availability and continued relevance to SSA initiatives. The grantee is strongly encouraged to collaborate with SSA's and other government-related research and development activities to avoid duplication of research. After award, SSA will help identify such activities and their funding agencies and facilitate any collaboration as necessary.

PURPOSE: This announcement seeks applications to establish a DRI that will serve as a national resource fostering high quality research, communication, and education. The Institute's program purpose is to benefit the public through four tasks:

(1) *Research and evaluation.* The DRI will be expected to plan, initiate, and maintain a research program of higher caliber. There will be special emphasis on research that will inform the debate on disability policy.

(2) *Dissemination.* The DRI will develop resources to inform the academic community, policymakers, and the public on issues concerning disability policy.

(3) *Training and education.* The DRI will develop a professional training program including, but not limited to, graduate and postgraduate education; intramural exchanges and formal instruction of policymakers which focuses on the issues of disability policy.

(4) *Facilitation of data usage.* The DRI will facilitate research using SSA administrative data.

DATES: The closing date for submitting applications under this announcement is January 12, 2000.

FOR FURTHER INFORMATION CONTACT: To request an application kit, and for general (nonprogrammatic) information regarding the announcement or application package contact: E. Joe Smith, Grants Management Officer, SSA, Office of Acquisition and Grants, Grants Management Team 1–E–4 Gwynn Oak Building, 1710 Gwynn Oak Avenue, Baltimore, Maryland 21207–5279. The fax number is (410) 966–9310. The telephone numbers are E. Joe Smith, (410) 965–9503 (e-mail: joe.smith@ssa.gov), or Dave Allshouse, (410) 965–9262 (e-mail: daveallshouse@ssa.gov), or Gary Stammer, (410) 965–9501 (e-mail: gary.stammer@ssa.gov). For information on the program content of the announcement/application, contact: Paula Laird, Project Officer, SSA, ORES, 6401 Security Blvd., 4–C–15 Operations Building, Baltimore, Maryland 21235. The fax number is (410) 965–3308. The telephone numbers are (410) 965–9243 (e-mail: paula.laird@ssa.gov), or Nelson Rambath, Alternate Project Officer, (410) 965–2396 (e-mail: nelson.rambath@ssa.gov).

Table of Contents

Part I—Supplementary Information

A. Eligible Applicants
B. Type of Award
C. Availability and Duration of Funding
D. Letter of Intent

Part II—Establishment of a Disability Research Institute—Responsibilities of the Institute and the Federal Government

A. Priority Research Areas
B. Cooperative Agreement Responsibilities
1. Institute Responsibilities
2. SSA Responsibilities
3. Joint Responsibilities
C. Special Requirements

Part III—Application Preparation and Evaluation Criteria

A. Content and Organization of Technical Application
B. Review Process and Funding
C. Selection Process and Evaluation Criteria

Part IV—Application Forms, Completion and Submission

A. Availability of Application Forms
B. Components of a Complete Application
C. Application Submission
D. Notification

Part I—Supplementary Information

A. Eligible Applicants

SSA seeks applications from domestic universities or other post-secondary degree granting entities. For-profit organizations may apply with the understanding that no cooperative agreement funds may be paid as profit to any cooperative agreement recipient. Profit is considered as any amount in excess of the allowable costs of the award recipient.

In accordance with an amendment to the Lobbying Disclosure Act, popularly known as the Simpson-Craig Amendment, those entities organized under section 501(c)4 of the Internal Revenue Code that engage in lobbying are prohibited from receiving Federal cooperative agreement awards.

B. Type of Award

All awards made under this program will be made in the form of cooperative agreements. A cooperative agreement, as opposed to a grant, anticipates substantial involvement between SSA and the awardee during the performance of the project. A comprehensive annual review process will allow SSA to evaluate, recommend changes, and approve the Institute's activities. This involvement may include collaboration or participation by SSA in the activities of the Institute as determined at the time of award. The terms of award are in addition to, not in lieu of, otherwise applicable guidelines and procedures.

C. Availability and Duration of Funding

1. ORES has available $1.25 million to fund the initial 12-month budget period of a proposed five-year cooperative agreement pursuant to this announcement. (Additional funding up to $1 million per year for related projects, as requested by SSA, might become available from SSA for further support of the Institute selected under this announcement.)

2. Applicants must include separate budget estimates for each of the five years, if they expect funding levels to be substantially different in subsequent years.

3. The amount of funds available for the cooperative agreement in future years has not been established. Legislative support for continued funding of the Institute cannot be guaranteed and funding is subject to future appropriations and approval by the Commissioner. SSA expects, however, that the Institute will be supported during future fiscal years at an annual level of $1 million.

4. The Institute should prepare a five-year proposal with a maximum budget of $5.25 million.

5. Additional funds up to $1 million per year may become available from SSA and/or other Federal agencies (through co-funding) in support of the Institute's projects.

6. Initial awards, pursuant to this announcement, will be made on or about April 11, 2000.

7. The awardee shall share in the cost of the project. SSA will not provide total funding to the Institute. Recipients of an SSA cooperative agreement are required to contribute a non-Federal match of at least 5 percent toward the total approved cost of the project. The total approved cost of the project is the sum of the Federal share (maximum of 95 percent) and the non-Federal share (minimum of 5 percent). The non-Federal share may be cash or in-kind (property or services) contributions.

Although one award is anticipated, nothing in this announcement restricts SSA's ability to make more than one award, to make an award of lesser amount, or to add additional entities, institutions or universities to the Disability Research Institute in the future.

D. Letter of Intent

Prospective applicants are asked to submit by November 29, 1999, a letter of intent that includes (1) this program announcement number and title; (2) a brief description of the proposed Institute; (3) the name, postal and e-mail addresses, and the telephone and fax numbers of the Institute's Director; and (4) the identities of the key personnel and participating institutions. The letter of intent is not required, is not binding, and does not enter into the review process of a subsequent application. The sole purpose of the letter of intent is to allow SSA staff to estimate the potential review workload and avoid conflicts of interest in the review. The letter of intent should be sent to: DRI Letter of Intent, Social Security Administration, Office of Research, Evaluation and Statistics, Division of Disability Research, 6401 Security Blvd., 4–C–15 Operations Bldg., Baltimore, MD 21235.

Part II—Establishment of a Disability Research Institute—Responsibilities of the Institute and the Federal Government

A. Priority Research Areas

The Institute should focus on several themes or research areas directly relevant to developing or improving

policy related to people with disabilities. Research will be done from existing data sources, and will not include development of surveys or demonstration projects.

The successful applicant shall develop and conduct a research program directed towards people with disabilities that also appropriately balances development of training, information dissemination and data usage facilitation activities. The research approach should relate, in broad terms, to the Social Security Disability Insurance (SSDI) and Supplemental Security Income (SSI) programs. The purpose of these activities is to promote greater understanding of disability policy and its current and future impact on youth, the working-aged and the near-retirement aged segments of the disabled populations. The research should address these individuals at all socioeconomic levels, but with particular emphasis on the poor and the near poor. SSA has identified three priority research areas within the realm of disability policy on which applicants should focus and applications will be scored. These areas include:

1. *The Interrelationship Between and Potential Impacts on: (1) Advancements in Technology and Medicine, (2) the Requirements of Work, (3) the SSDI and SSI Programs; and Persons with Disabilities* This includes, but is not limited to:

- Trends in the nature of disability and the composition of the disabled population (*e.g.*, types of impairments, the extended reliance of disabled adolescents and adults on disability income security programs and increases in the volume of disability benefit awards to younger persons);
- Changes in technology, the labor market and the nature of work; and the potential effects of these changes on work disability in the future; and
- Types of assistance from public programs that could be made available to persons with disabilities to help them sustain a maximum level of independence.

2. *The Effects of Rehabilitation and Other Support Services on: The Proportion of Persons With Disabilities Who Continue Working or Reenter the Workforce, and the Effects on the SSDI and SSI Programs* This includes, but is not limited to:

- Relationship of treatment (e.g., improving functioning via social, vocational, medical treatment; compliance with prescribed treatment; identifying person who might benefit from appropriate treatment, etc.) to return-to-work of persons with disabilities.
- Employment strategies (*e.g.*, methods of early intervention for persons with disabilities, providing short-term or interim disability payments, job accommodations, case management, etc.) that may influence the work patterns of persons with disabilities;
- The interaction of rehabilitation and other support services (including Vocational Rehabilitation and Unemployment Insurance Benefits), the effects of individual motivation and the availability of work on the decisions of persons with disabilities to maintain employment or to apply for SSDI and SSI benefits; and
- Effectiveness of Vocational Rehabilitation (VR) services (*e.g.*, the best point in time during the course of disability to provide VR, usefulness and shortcomings of VR in assisting persons with disabilities to maintain their current job or be retrained for new work, awareness and utilization of VR services by persons with disabilities, success of VR relative to disability diagnosis, etc.)

3. *The Interaction Between and Impact on: Medical, Functional and Occupational Factors; and Disability Determinations for Purposes of Entitlement to SSDI and SSI Benefits* This includes, but is not limited to:

- Current and future methods of measuring function and comparisons between and future functional requirements of work;
- Occupational demand constructs to replace the Department of Labor's *Dictionary of Occupational Titles*, which is currently used to measure occupational demands in SSA's disability decision process;
- Characteristics of individuals with borderline and severe mental and physical impairments who work; and
- Barriers to employment for persons with mental impairments.

The Institute will develop and disseminate knowledge about these and related issues. SSA realizes competent analysis of all priority research areas may be beyond the capacity of any one Institute and thus the Institute may wish to focus its resources and expertise on a subset of the areas listed above. Similarly, the Institute may choose to concentrate on a few aspects of the priority research areas more strongly than others. The goal of the Institute is to address a range of objectives discussed above without compromising the overall quality of research in the separate priority areas.

B. Cooperative Agreement Responsibilities

1. *Institute Responsibilities:* The Institute will perform the following tasks:

a. *Research and evaluation* The Institute has a primary and lead responsibility to define objectives and approaches and will be expected to plan, initiate, and maintain a research program of high caliber. It must meet the tests of social science rigor and objectivity. The research will use state-of-the-art research methodology and have practical application to timely disability policy issues. The program will strive for respect from the academic and policy communities (over a broad range of the political spectrum) for its scientific quality, fairness, and policy relevance.

The research program should include supporting the work of members of the DRI staff and other affiliated researchers. In addition, it should provide intellectual leadership in the national research community by establishing links with a broad range of other scholars and organizations through programs such as visiting and postdoctoral appointments, research assistantships, and a limited program of nonresident grants, for example. Collaboration between the Institute and SSA researchers is encouraged, as it is with other organizations interested in disability policy.

The research program should include multi-disciplinary approaches to increase understanding of the issues beyond what is possible from analysis within the framework of a single discipline. The staff would include competency-relevant disciplines such as economics, sociology, public health policy/administration, demography, physiology, occupational taxonomy, acturial science, labor management, etc.

Planning and execution of the research program shall always consider the policy implications of research findings. However, it also is appropriate, for example, to engage in activities to make advances in research techniques. SSA will form an internal technical Assistance Panel (See Part II, SSA Responsibilities) to review and concur with the research agenda and other DRI products to assure policy relevance, utility, and scope. In addition, a group of nationally recognized scholars and practitioners (See Part II, Joint Responsibilities) shall periodically review the research agenda to assure its policy relevance, utility, and scope.

Occasionally, Institute staff will be expected to comment on SSA research

plans, provide critical commentary on research products, perform statistical policy analyses, and other quick-response activities to inform SSA's research, evaluation, and policy analysis function. In addition, the Institute Director may be asked to aid in the development of SSA's internal research priorities.

b. *Dissemination* Making knowledge and information available to the academic and policy communities, as well as the public (both beneficiaries and contributors), is to be another integral feature of the Institute's responsibilities. The DRI will facilitate the process of translating basic behavioral and social research theories and findings into practical policy alternatives. The Institute will be expected to maintain a dissemination system of periodic newsletters, research papers, academic and/or trade journal articles, and occasional books. In addition, the Institute will be expected to organize conferences, workshops, lectures, seminars, and/or other ways of sharing current research activities and findings. The Institute will hold a biennial conference on issues related to disability policy. The Institute will also have the responsibility for publishing a book composed of papers delivered at the biennial conference.

Applicants are encouraged to propose the use of creative methods of disseminating data and information, such as using the Internet. Applications should show sensitivity to alternative dissemination strategies which may be appropriate for different audiences—such as policymakers, practitioners, the public, advocates, and academics. The research and dissemination will be nonpartisan and of value to all levels of policymaking. SSA reserves the right to review and concur on all publications created using Institute funding before they are published.

c. *Training and Education* The DRI is expected to both train new scholars and educate academics and practitioners on new techniques and research findings on issues of disability policy that impact the economic security of persons with disabilities. The Institute is expected to develop and expand a diverse corps of scholars/researchers who focus their analytical skills on research and policy issues central to the Institute's mission. Training mechanisms should include seminar series, conferences, graduate courses, and mini-courses to be held in both Baltimore/Washington D.C. and the DRI site.

The Institute is expected to financially support the development and work of new scholars. For example, funding should be allocated to support graduate students, as research assistants and through research grants; Ph.D. candidates, through dissertation grants; and other research scholars through post-doctoral and visiting appointments. Additionally, the Institute will conduct training seminars for governement analysts and policymakers on the Institute's research findings and methodological advancements. Training exchanges between the Institute and government researchers should also be anticipated.

To assure the quality of its research, dissemination, and training, the Institute must establish and maintain a formal tie with a university, including links with appropriate departments within that university. The Institute must have a major presence at a single site (university or city); however, alternative arrangements among entities and with individual scholars are encouraged and may be proposed.

d. *Facilitation of data usage* SSA has been seeking ways to make administrative and other data more available to the research community. Such efforts are resource intensive and must adhere to clear privacy protection requirements. The DRI will work as an external resource to facilitate this objective. Specific areas in which the DRI should contribute include: writing papers that further efforts to effectively combine data sharing and data privacy; developing documentation for administrative files; aiding researchers in obtaining administrative extracts for policy-relevant research projects; developing sophisticated statistical techniques to mask micro data; aiding SSA staff in developing methodology and policy regarding linkages of administrative data with outside data sources; and providing, with SSA assistance, public use files that rely on data aggregates that cannot be used to identify individuals. In addition, it is SSA's goal to increase the sites at which outside researchers can use administrative data.

Without compromising academic freedom, Institute staff will be expected to comply with special requests for administrative confidentiality in specific sensitive situations. The Institute shall make reasonable efforts to provide other researchers appropriate and speedy access to research data from this project and establish public use files of data developed under this award.

The institute is expected to work in conjunction with SSA and other Federal agencies and appropriate organizations to help develop mechanisms that enable additional sites to satisfy the legal and privacy requirements for outside researchers, who agree to specific privacy protections, to be able to access restricted-use data files.

2. *SSA Responsibilities:* SSA will be involved with the Institute in jointly establishing broad research priorities, planning strategies, and deliverable dates to accomplish the objectives of this announcement. SSA, or its representatives, will provide the following types of support to the Institute:

a. Consultation and technical assistance in planning, operating and evaluating the Institute's program activities. SSA intends to form an internal Technical Assistance Panel that will review and concur with all of the Institute's submissions/deliverables prior to implementation and/or publication.

b. Information about SSA programs, policies, and research priorities.

c. Assistance in identifying SSA information and technical assistance resources pertinent to the Institute's success.

d. Review of Institute activities and collegial feedback to ensure that objectives and award conditions are being met.

SSA may suspect or terminate any cooperative agreement in whole or in part at any time before the date of expiration. Suspension or termination could occur if the awardee materially fails to comply with the terms and conditions of the cooperative agreement, if technical performance requirements are not met, or if the project is no longer relevant to the Agency. SSA will promptly notify the awardee in writing of the determination and the reasons for suspension or termination together with the effective date.

SSA reserves the right to suspend funding for individual projects in process or in previously approved research areas or tasks after awards have been granted.

SSA encourages cooperative agreement applicants to become knowledgeable about SSA's operations as well as entitlements under its programs. Pamphlets and other public information may be obtained from any local Social Security field office or by calling 1–800–772–1213.

3. *Joint Responsibilities:* Jointly with SSA, the Institute will select approximately six nationally recognized scholars and practitioner who are unaffiliated with the Institute to provide assistance in formulating the Institute's research agenda and advice on implementation. The institute shall select three scholars/practitioners and SSA will select three scholars/practitioners. Efforts will be made in

selecting the scholars/practitioners to assure a range of perspectives, and a variety of substantive viewpoints. The SSA Project Officer or some other SSA representative will participate in all meetings. Funded under this agreement, the scholars/practitioners will meet once or twice a year rotating between the Baltimore MD/Washington, DC areas, and the Institute location.

C. Special Requirements

The Institute Director must have a demonstrated capability to organize, administer, and direct the Institute. The Director will be responsible for the organization and operation of the Institute and for communication with SSA on scientific and operational matters. The Director must also have a minimum time commitment of 30 percent of the DRI Cooperative Agreement. Racial/ethnic minority individuals, women, and persons with disabilities should be encouraged to apply as the Director. A list of previous grants and cooperative agreements held by the Director shall be submitted. Administrator names and contact information for each grant and/or cooperative agreement shall also be submitted.

In addition to the Director, skilled personnel and institutional resources capable of providing a strong research and evaluation base in the priority areas specified must be available. The university and pertinent departments must show a strong commitment to the Institute's support. Such commitment may be provided as dedicated space, salary support for investigators or key personnel, dedicated equipment or other financial support for the proposed Institute.

The Institute should be conceptualized and defined by its integrative, multi-disciplinary nature and need not be limited to geographical or departmental boundaries. A research team may consist of investigators or institutions that are geographical distant, to the extent that the research design requires and accommodates such arrangements. Nothing in this announcement precludes non-academic entities from being affiliated with an applicant.

Part III—Application Preparation and Evaluation Criteria

This part contains information on the preparation of an application for submission under this announcement, the forms necessary for submissions and the evaluation criteria under which the applications will be scored. Potential applicants should read this part carefully in conjunction with the information provided in Part II.

In general, SAA seeks organizations with demonstrated capacity for providing quality policy research and evaluation, training, and working with government policymakers. Applicants should reflect, in the Program Narrative section of the application, how they will be able to fulfill the responsibilities and the requirements described in the announcement. The application should specify in detail how administrative arrangements will be made to minimize start-up and transition delays. Applications which do not address all four major tasks discussed in Institute Responsibilities in Part II will not be considered for an award.

It is anticipated that the applicant will have access to additional sources of funding for some projects and arrangements with other organizations and institutions. Funds from other sources cannot be applied toward the awardee's matching share of the total approved cost of the project. The applicant (including the Institute Director and other key personnel) shall make all current and anticipated related funding arrangements (including contact information for grant/contract/cooperative agreement administrators) explicit in an attachment to the application (Part IV, Section B–12). As part of the annual review process, this information will be updated and reviewed to limit duplicitous funding for Institute projects.

A. Content and Organization of Technical Application (See ''Components of a Complete Application,'' Part IV, Section B)

The application must begin with the required application forms and a three-page (double-spaced) overview and summary of the application. Staff resumes should be included in a separate appendix. The core of the application must contain eight sections, presented in the following order:

(1) A brief (not more than 10 pages) background analysis of the key disability policy issues and trends with a focus on the primary research themes of the proposed Institute. the analysis should discuss concisely, but comprehensively, important priority research issues and demonstrate the applicant's grasp of the policy and research significance of recent and future social, economic, political, and demographic trends.

(2) A research and evaluation prospectus for a five-year research agenda, outlining the major research themes to be investigated over the next five years. In particular, the prospectus will describe the activities planned for the priority research areas and other additional research topics proposed by the applicant. The prospectus should discuss the kind of research activities that are needed to anticipate future policy debates on SSDI and SSI and the role of the proposed Institute in promoting those activities. The prospectus should follow from the Background Analysis section. It may, of course, also discuss research areas and issues that were not mentioned in the analysis if the author(s) of the application feel there have been gaps in past research, or that new factors have begun to affect or soon will begin to affect national disability policy.

The prospectus shall include detailed descriptions of individual research projects that will be expected in the Institute's first year of operation. It also should be specific about long-term research themes and projects. The areas of research described in the prospectus should be concrete enough that project descriptions in subsequent research plan amendments can be viewed as articulating a research theme discussed in the prospectus. An application that contains simply an ad hoc categorization of an unstructured set of research projects—as opposed to a set of projects which strike a coherent theme—will be judged unfavorably.

Note: Once a successful applicant and the outside scholars/practitioners have been selected, they and SSA will review the research agenda and determine research priorities. This may include the addition, limitation, or removal of proposed research projects. After review, the Institute will submit to SSA a revised research plan that summarizes the deliberations and priorities. The research plan will be periodically reviewed and revised as necessary. The application should discuss a proposed research planning process, including involvements of the outside scholars/practitioners, SSA, and other advisors and participants in the Institute.

(3) A prospectus for dissemination should include proposed mechanisms for reaching a broad audience of academics and researchers, policymakers, and the public. Dissemination plans should detail proposed publications, conferences, workshops, and training seminars.

(4) A prospectus for training and education should include proposed training and educational strategies to meet the goals described in Part II, Section A, Task 3.

(5) A prospectus for facilitation of data usage demonstrating a broad knowledge of administrative data and the legal and institutional constraints facing public data release. In addition,

it should include a discussion of the technical expertise of Institute staff and proposed mechanisms to facilitate the sharing of data.

(6) A staffing and organization proposal for the Institute including an analysis of the types of background needed among staff members, the Institute's organizational structure, and linkages with other organizations. In this section, the applicant should specify how they will assure a genuinely multi-disciplinary approach to research, and where appropriate, identify the necessary links to university departments, other organizations and scholars engaged in research and government policymaking.

The applicant should identify the Institute Director and key senior research staff. Full resumes of proposed staff members shall be included as a separate appendix to the application. The time commitment to the Institute and other commitments for each proposed staff member shall be indicated. Note that once the cooperative agreement has been awarded, changes in key staff will require approval from SSA. The kinds of administrative and tenure arrangements, if any, the Institute proposes to make should also be discussed in this section. In addition, the author(s) of the application and the role which he/she (they) will play in the proposed Institute must be specified.

This section should discuss the financial arrangements for supporting research assistants, dissertation fellowships, affiliates, resident scholars, etc. The discussion should include the expected number and type of scholars to be supported and the level of support anticipated.

If the applicant envisions an arrangement of several universities or entities, this section should describe the specifics about the relationships, including leadership, management, and administration. They should pay particular attention to discussing how a focal point for research, teaching, and scholarship will be maintained given the arrangement proposed.

The application should also discuss the role, selection procedure, and expected contribution of the outside scholars/practitioners (See Part II, Joint Responsibilities).

(7) An organizational experience summary of past work at the university or institution proposed as the location (or the host) of the Institute that relates directly or indirectly to the research priorities of this request. This discussion should include more than a listing of the individual projects completed by the individuals who are included in the application. It should provide a sense of institutional commitment to policy research on issues involving disability policy. Where specific individuals are proposed for the staff of the Institute, it is legitimate to discuss their past research, whether or not it took place at the institution proposed to be the location the Institute. The application must list in an appendix appropriate recent or current research projects, with a brief research summary, contact person references, and address and telephone numbers of references.

This section should also discuss the experience of the research staff in working with the government agencies and their demonstrated capacity to provide policy-relevant support to these agencies.

(8) A budget narrative which links the research, training, dissemination, and data-facilitation program to the Institute's funding level. The budget should, to the degree possible offer separate cost estimates for the individual research areas and projects proposed in the research prospectus. Funding should also be allocated to address occasional SSA requested activities (described in Part II, Section B–1). This section should also discuss how the five-year budget supports proposed research, training, dissemination, and data-facilitation activities and should link the first year of funding to a five-year plan. The discussion should include the appropriateness of the level and distribution of funds to the successful completion of the research, training, and dissemination plans.

The availability, potential availability or expectation of other funds (from the host university, other universities, foundations, other Federal agencies etc.) and the uses to which they would be put, should be documented in this section. When additional funding is contemplated, applicants shall note whether the funding is being donated by the host institution, is in-hand from another funding source, or will be applied for from another funding source. Formal commitments for the 5 percent, non-federal, minimum budget share should be highlighted in this section.

Seeking additional support from other sources is encouraged. However, funds pertaining to this announcement must not directly duplicate those received from other funding sources.

B. Review Process and Funding

In addition to any other reviews, an independent review panel consisting of approximately eight qualified persons will be formed. Each panelist will objectively review and score the cooperative agreement applications using the evaluation criteria listed in Part III, Section C below. The panel will recommend to SSA a Disability Research Institute based on (1) the application scores; (2) the feasibility and adequacy of the project plan and methodology; and (3) how the Institute would meet SSA's disability policy-relevant objectives.

The Commissioner of Social Security will consider the panel's recommendations when awarding the cooperative agreement. Although the results from the independent panel reviews are the primary factor used in making funding decisions, they are not the sole basis for making awards. The Commissioner will consider other factors as well (such as duplication of internal and external research efforts) when making funding decisions. All applicants must use the guidelines provided in the SSA application kit for preparing applications requesting funding under this cooperative agreement announcement. These guidelines describe the minimum amount of required project information. However, when completing Part III—Program Narrative, Form SSA–96–BK, please follow the guidelines under Part III, Section A, above. Please disregard the Program Narrative instructions provided on pages 3, 4, and 5 of the SSA Federal Assistance Application Form SSA–96–BK.

All awardees must adhere to SSA's Privacy and Confidentiality Regulations (20 CFR, part 401) as well as provide specific safeguards surrounding client information sharing, paper/computer records/data, and other issues potentially arising from administrative data.

SSA reserves the option to discuss applications with other Federal or State staff, specialists, knowledgeable persons, and the general public. Comments from these sources, along with those of the reviewers, will be kept from inappropriate disclosure and may be considered in making an award decision.

C. Selection Process and Evaluation Criteria

The evaluation criteria correspond to the outline for the development of the Program Narrative Statement of the application described in Part III, Section A, above. The application should be prepared in the format indicated by the outline described in The Components of a Complete Application (*i.e.*, Part IV, Section B).

Selection of the successful applicant will be based on the technical and financial criteria laid out in this announcement. Reviewers will determine the strengths and weaknesses of each application in terms of the evaluation criteria listed below.

The point value following each criterion heading indicates the maximum numerical relative weight that each section will be given in the review process. An unacceptable rating on any individual criterion may render the application unacceptable. Consequently, applicants should take care that all criteria are fully addressed in the applications. Applications will be reviewed as follows:

(a) Quality of the background analysis. (See Part III, Section A–1) (10 points)

Applications will be judged on whether they provide a thoughtful and coherent discussion of political, economic, social, demographic, medical and health-related trends influencing disability. Reviewers will judge applicants' abilities to discuss the past, present, and future role of government programs and policies which affect these trends. Applications should tie the trends and influences discussed to their proposed research agenda.

(b) Quality of the research and evaluation prospectus. (See Part III, Section A–2) (30 points)

Reviewers will judge this section on whether the research agenda is scientifically sound and policy relevant. They also will consider whether the applicant is likely to produce significant/seminal contributions to their proposed research areas and how closely the proposed projects fit the objectives for which the applications were solicited.

The application will be judged on the breadth and depth of the applicant's commitment to research and evaluation of the priority areas described in Part II, Section A. The discussion and research proposed must address at least one priority research area. Applicants will generally receive higher scores for addressing more than one priority research area. However, a strong proposal focusing on one area will outscore one that is broad and weakly defined. Applicants with additional insightful research proposals will also score higher. Concise plans for research projects in the near term (one or two years) as well as a five-year agenda are important.

Reviewers will rate applications on the contents of the plans to conduct policy-relevant research. In addition, they will be judged on their relevance to government activities. Reviewers will also take into consideration SSA priorities and funded or anticipated projects.

(c) Dissemination; training and education; and facilitation of data usage. (See Part III, Section A–3, A–4, A–5) (20 points)

Reviewers will evaluate strategies for dissemination of research and other related information to a broad and disparate set of academic, research, and policy communities as well as to the public. Reviewers will also evaluate whether the appropriate dissemination method is being proposed for targeted audiences of academics and researchers, policymakers, and the public. Proposed strategies that increase dissemination across other organizations conducting disability income research will also receive higher ratings.

The evaluation of the training and evaluation prospectus will include an assessment of plans to enhance the training of graduate students and young scholars through direct financial support as well as exposure to policy research. In addition, reviewers will evaluate proposed strategies for educating and training policymakers and practitioners on issues of disability.

The scoring of the prospectus for facilitation of data usage will include a review of the activities planned as well as staff and management expertise and experience. Applicants should also demonstrate an understanding of the legal and institutional constraints involved with SSA administrative, earnings, and tax data.

(d) Quality of the staffing proposal and proposed organizational arrangements. (See Part III, Section A–6 and A–7) (30 points)

Reviewers will judge the applicant's Institute Director and staff on research experience, demonstrated research skills, administrative skills, public administration experience, and relevant policy-making skills. An additional criterion will be the Institute's demonstrated potential to act as a conduit between basic and applied behavioral and social science research and policy analysis/evaluation. Both the evidence of past involvement in related research and the specific plans for seeking applied outcomes described in the application shall be considered part of that potential. Reviewers may consider reference from grant/cooperative agreement administrators on previous grants and cooperative agreements held by the proposed Institute Director or other key personnel. Director and staff time commitments to the Institute also will be a factor in evaluation. Whether the applicant can maintain a single location for research, teaching, and scholarship is an important consideration. Reviewers will evaluate the affiliations of proposed key personnel to ensure the required multi-disciplinary nature of the Institute is being fulfilled. Higher scores will generally be given to those institutions which include active participation by a multi-disciplinary research staff. Furthermore, reviewers will rate the applicant's pledge and ability to work in collaboration with other scholars and government employees in search of similar goals.

Applicants will be judged on the nature and extent of the organizational support for research, mentoring scholars, dissemination, facilitation of data usage, and in areas related to the institution's central priorities and this request. Reviewers will evaluate the commitment of the host institution (and the proposed institutional unit that will contain the Institute) to assess its ability to support all four of the Institute's major activities: (1) Scholarly, policy-relevant research; (2) dissemination; (3) education and training; and (4) facilitation of data usage. Reviewers also will evaluate the applicant's demonstrated capacity to work with a range of government agencies.

(e) Appropriations of the budget to carry out the planned staffing and activities. (See Part III, Section A–8) (10 points)

Reviewers will consider whether (1) the budget assures an efficient and effective allocation of funds to achieve the objectives of this announcement, and (2) the applicant has additional funding from other sources, in particular, the host institution. Applications that show funding from other sources that supplement funds for this cooperative agreement will be given higher marks than those without financial support.

Part IV—Application Forms, Completion and Submission

A. Availability of Application Forms

To obtain an application kit that contains the prescribed forms for funding projects under this announcement, all requests should be submitted via mail, fax, or e-mail. *MAIL*: Grants Management Team, Office of Acquisition and Grants, Social Security Administration, 1–E–4 Gwynn Oak Building, 1710 Gwynn Oak Avenue, Baltimore, Maryland 21207–5279. *FAX:* (410) 966–9310 or (410) 966–1261. *E-MAIL:* joe.smith@ssa.gov or dave.allshouse@ssa.gov or gary.stammar@ssa.gov.

Requests submitted by mail should include a return address label. To assist

us, please provide the information requested using the following format:

Requestor:
Name:
Telephone Number:

Mail to:
Name (individual):
Organization:
Street Address:
City State Zip Code:

When requesting an application kit, the applicant should refer to the program announcement number SSA–ORES–00–1 and the date of this announcement to ensure receipt of the proper application kit.

B. Components of a Complete Application

A complete application package consists of one original, signed and dated application, plus at least two copies, which include the following items in order:

1. Cover Sheet;
2. Project Abstract/Summary (not to exceed three pages);
3. Table of Contents;
4. Part I (Face Sheet)—Application for Federal Assistance (Standard Form 424);
5. Part II—Budget Information—Sections A through G (Form SSA–96–BK);
6. Budget Justification (Details) for Section B—Budget Categories;
7. Proof of non-profit status, if applicable;
8. Copy of the applicant's approved indirect cost rate agreement, if appropriate;
9. Part III—Project (Program) Narrative. Please disregard instructions provided on pages 3, 4, and 5 of the SSA Federal Assistance Application Form SSA–96–BK. The program narrative should be organized in eight sections:
   (a) Background Analysis,
   (b) Research and Evaluation Prospectus,
   (c) Dissemination Prospectus,
   (d) Training and Education Prospectus,
   (e) Facilitation of Data Usage Prospectus,
   (f) Staffing Proposal Including Staff Utilization and Staff Background,
   (g) Organizational Experience Summary, and
   (h) Budget Narrative.
10. Part IV—Assurances;
11. Additional Assurances/Certifications;
12. Any appendences/attachments; and
13. Supplement to Section II—Key Personnel.

Staple each copy of the application securely (front and back if necessary) in the upper left corner. Please do not use or include separate covers, binders, clips, tabs, plastic inserts, books, brochures, videos, or any other items that cannot be readily photocopied.

C. Application Submission

There guidelines should be followed in submitting applications:

—All applications requesting SSA funds for cooperative agreement projects under this announcement must be submitted on the standard forms provided in the application kit. NOTE: Facsimile copies will not be accepted.
—The application shall be executed by an individual authorized to act for the applicant organization and to assume for the applicant organization the obligations imposed by the terms and conditions of the cooperative agreement award.
—Number of copies: The package should contain one original, signed and dated application plus at least two copies. Ten additional copies are optional and will expedite processing of the application. A disk copy of the Abstract and the Program Narrative (in Word 97 format) would also be helpful to SSA, but is optional.
—Length: Applications should be brief and concise as possible, but assure successful communication of the applicant's proposal to the reviewers. The Project Narrative portion of the application (Part III) may not exceed 150 double spaced pages (excluding the resume and outside funding appendices), typewritten on one side using standard (8½″×11″) size paper and 12 point font. Attachments that support the project narrative count within the 150 page limit. Attachments not applicable to the project narrative do not count toward this page limit.
—Attachments/Appendices, when included, should be used only to provide supporting documentation. Brochures, videos, etc., should not be included because they are not easily reproduced and are therefore inaccessible to reviewers.
—In item 11 of the Face Sheet (SF 424), the applicant must clearly indicate the application submitted is in response to this announcement (SSA–ORES–00–1). The applicant also is encouraged to select a short descriptive project title.
—On all applications developed jointly by more than one organization, the application must identify only one university as the lead organization and the official applicant. The other(s) can be included as co-participants, subgrantees or subcontractors.

Applications must be mailed or hand delivered to: Grants Management Team, Office of Acquisition and Grants, DCFAM, Social Security Administration, Attention: SSA–ORES–00–1, 1–E–4 Gwynn Oak Building, 1710 Gwynn Oak Avenue, Baltimore, MD 21207–5279.

Hand-delivered applications are accepted between the hours of 8 a.m. and 5 p.m., Eastern Standard Time, Monday through Friday. An application will be considered as meeting the deadline if it is either:

1. Received at the above address on or before the deadline date; or

2. Mailed through the U.S. Postal Service or sent by commercial carrier on or before the deadline date and received in time to be considered during the competitive review and evaluation process. Packages must be postmarked by January 12, 2000. Applicants are cautioned to request a legibly dated U.S. Postal Service postmark or to obtain a legibly dated receipt from a commercial carrier as evidence of timely mailing.

Applications that do not meet the above criteria are considered late applications. SSA will not waive or extend the deadline for any applicant unless the deadline is waived or extended for all applicants. SSA will notify each late applicant that its application will not be considered.

D. Notification

SSA will use Form SSA–3966 PC (a double postcard) to acknowledge receipt of application forms. Please complete the top and bottom parts of the double postcard, which is included in the application kit, and, on the franked side of the postcard, enter the name and address of the person to whom the acknowledgment is to be sent. Include Form SSA–3966 PC with the original copy of the application forms. If you do not receive acknowledgment of your application within eight weeks after the deadline date, please notify SSA.

Paperwork Reduction Act

This notice contains reporting requirements. However, the information is collected using a Federal Assistance Application Form SSA–96–BK, which has the Office of Management and Budget clearance number 0960–0184.

Executive Order 12372 and 12416—Intergovernmental Review of Federal Programs

This program is not covered by the requirements of Executive Order 12372, as amended by Executive Order 12416, relating to the Federal policy for consulting with State and local elected

officials on proposed Federal financial assistance.

(Catalog of Federal Domestic Assistance: Program No. 96.007, Social Security—Research and Demonstration)

Kenneth S. Apfel,

Commissioner of Social Security.

[FR Doc. 99–26676 Filed 10–13–99; 8:45 am]

BILLING CODE 4190–29–M

DEPARTMENT OF STATE

[Public Notice 3131]

Advisory Committee on International Communications and Information Policy; Meeting Notice

The Department of State is announcing the next meeting of its Advisory Committee on International Communications and Information Policy. The Committee provides a formal channel for regular consultation and coordination on major economic, social and legal issues and problems in international communications and information policy, especially as these issues and problems involve users of information and communication services, providers of such services, technology research and development, foreign industrial and regulatory policy, the activities of international organizations with regard to communications and information, and developing country interests.

The purpose of the meeting will be for the members to look at the substantive issues on which the committee should focus, as well as specific countries and regions of interest to the committee. In addition, the Committee members will review the activities of the various working groups of the Advisory Committee.

This meeting will be held on Thursday, November 18, from 9:30 a.m.—12:30 p.m. in room 1105 of the Main Building of the U.S.

Department of State, located at 2201 ''C'' Street, NW, Washington, DC 20520. Members of the public may attend these meetings up to the seating capacity of the room. While the meeting is open to the public, admittance to the State Department Building is only by means of a pre-arranged clearance list. In order to be placed on the pre-clearance list, please provide your name, title, company, social security number, date of birth, and citizenship to Timothy C. Finton at <fintontc@state.gov>. All attendees for this meeting must use the 23rd Street entrance. One of the following valid ID's will be required for admittance: any U.S. driver's license with photo, a passport, or a U.S. Government agency ID. Non-U.S. Government attendees must be escorted by State Department personnel at all times when in the State Department building.

For further information, contact Timothy C. Finton, Executive Secretary of the Committee, at (202) 647–5385 or <fintontc@state.gov>.

Dated: October 5, 1999.

Timothy C. Finton,

Executive Secretary.

[FR Doc. 99–26725 Filed 10–13–99; 8:45 am]

BILLING CODE 4710–45–P

DEPARTMENT OF STATE

[Public Notice No. 3103]

Shipping Coordinating Committee, International Maritime Organization (IMO) Legal Committee; Notice of Meeting

The U.S. Shipping Coordinating Committee (SHC) will conduct an open meeting at 10:00 a.m., on Monday, November 1, 1999, in Room 2415 at U.S. Coast Guard Headquarters, 2100 Second Street, SW, Washington, DC. The purpose of this meeting is to report the results of Eightieth Session of the International Maritime Organization Legal Committee (LEG 80), and the Joint International Maritime Organization/International Labor Organization Ad Hoc Expert Working Group, held concurrently October 11–15, 1999, in London.

LEG 80 will focus primarily on completing its work on a draft protocol to the Athens Convention. The Joint IMO/ILO Ad Hoc Expert Working Group will be focusing on the subject of liability and compensation regarding claims for death, personal injury and abandonment of seafarers, therefore the SHC will also focus on this topic. Other topics that will be briefly addressed include: the draft IMO Guidelines on Shipowners' Responsibilities in Respect of Maritime Claims and a draft convention regarding bunker fuel spills. Time will also be allotted to address any other issues on the LEG work program on which there are questions or comments.

Members of the public are invited to attend the SHC meeting, up to the seating capacity of the room. For further information, or to submit views in advance of the meeting, please contact Captain Malcolm J. Williams, Jr., or Lieutenant Daniel J. Goettle, U.S. Coast Guard, Office of Maritime and International Law (G–LMI), 2100 Second Street, SW, Washington, DC. 20593–0001; telephone (202) 267–1527; fax (202) 267–4496.

Dated: October 1, 1999.

Stephen M. Miller,

Executive Secretary, Shipping Coordinating Committee.

[FR Doc. 99–26724 Filed 10–13–99; 8:45 am]

BILLING CODE 4710–07–P

DEPARTMENT OF STATE

[Public Notice No. 3137]

Bureau of Political Military Affairs; Suspension of Munitions Export Licenses to Indonesia

AGENCY: Department of State.

ACTION: Notice.

SUMMARY: Notice is hereby given that all licenses and approvals to export or otherwise transfer defense articles and defense service to Indonesia pursuant to Section 38 of the Arms Export Control Act are suspended, except for certain exports related to commercial communication satellites and Y2K compliance activities.

EFFECTIVE DATE: September 10, 1999.

FOR FURTHER INFORMATION CONTACT: Rose Biancaniello, Chief, Licensing Division, Office of Defense Trade Controls (DTC) Bureau of Politico-Military Affairs, Department of State (703) 875–6644).

SUPPLEMENTARY INFORMATION: At the direction of the President, due to the crisis in East Timor, the Department of State on September 10, 1999, took appropriate steps to halt approvals of exports of defense articles to Indonesia. It is currently the policy of the U.S. Government to deny all applications for licenses and other approvals to export or otherwise transfer defense articles and defense services to Indonesia, except for certain approvals related to commercial communication satellites and Y2K compliance activities. In addition, U.S. manufacturers and exporters and any other affected parties (e.g., brokers) are hereby notified that the Department of State has suspended all licenses and approvals authorizing the export of or other transfers of defense articles or defense services to Indonesia. The licenses and approvals that have been suspended include manufacturing licenses and technical assistance agreements involving Indonesia, including any agreement that has Indonesia as a sales territory. This action also precludes the use in connection with Indonesia of any exemptions from license or other approval requirements.

This suspension does not apply to any license or other approval for activities

associated with commercial communication satellites, their parts and components, and related technical data and services, and to Y2K compliance activities provided the license or approval in these two areas is not for the Indonesian military. All applicants holding these approvals should notify the Director of the Office of Defense Trade Controls in writing of the case number. Such notification will be used to ensure smooth operations at U.S. ports. Any new applications for licenses and other approvals to export defense articles and defense services to support commercial communication satellite exports or Y2K compliance activities that are not for the Indonesian military will be reviewed on a case-by-case basis. The Department of State is also prepared to review requests for exports, as may be necessary, to support the operations of an international peacekeeping force.

Date: October 8, 1999.

Eric D. Newsom,

Assistant Secretary, Bureau of Political Military Affairs.

[FR Doc. 99–26977 Filed 10–13–99; 8:45 am]

BILLING CODE 4710–15–P

DEPARTMENT OF TRANSPORTATION

Federal Aviation Administration

Harmonization Initiatives

AGENCY: Federal Aviation Administration, DOT.

ACTION: Notice of public meetings.

SUMMARY: The Federal Aviation Administration and the Joint Aviation Authorities will convene meetings to accept input from the public on the Harmonization Work Program. The Harmonization Work Program is the means by which the Federal Aviation Administration and the Joint Aviation Authorities carry out a commitment to harmonize, to the maximum extent possible, the rules regarding the operation and maintenance of civil aircraft, and the standards, practices, and procedures governing the design materials, workmanship, and construction of civil aircraft, aircraft engines, and other components. The purpose of this meeting is to provide an opportunity for the public to submit input to the Harmonization Work Program. This notice announces the date, time, location, and procedures for the public meeting.

DATES: The public meetings will be held on October 26, 27 and 29, 1999, starting at 10:30 a.m. each day. The meetings on simulator initiatives may begin earlier. Written comments are invited and must be received on or before October 20, 1999.

ADDRESSES: The public meeting will be held at Boeing Aircraft Corporation, 1200 Wilson Blvd., Arlington, VA (Rosslyn Metro Stop). Persons unable to attend the meeting may mail their comments in triplicate to: Brenda Courtney, Federal Aviation Administration, Office of Rulemaking, ARM–200, 800 Independence Avenue, SW., Washington, DC 20591.

FOR FURTHER INFORMATION CONTACT: Requests to attend and present a statement at the meeting or questions regarding the logistics of the meeting should be directed to Brenda Courtney, Office of Rulemaking, 800 Independence Avenue, SW., Washington, DC 20591; telephone (202) 267–3327, telefax (202) 267–5075.

SUPPLEMENTARY INFORMATION: The Federal Aviation Administration and the Joint Aviation Authorities will convene meetings to accept input from the public on the Harmonization Work Program. The meetings will be held on October 26 and 27 on Simulator Initiatives and October 27 and 29, 1999, on the remaining harmonization initiatives at Boeing Aircraft Corporation, 1200 Wilson Blvd., Arlington, VA. The meetings are scheduled to begin at 10:30 a.m. each date, except the meetings on simulator initiatives may begin earlier. The agenda for the meetings will include:

October 26–27, 1999
- Simulator Initiatives

October 27, 1999
- Review of Action Items from the 1999 Annual Harmonization Conference
- General Session—Industry Issues and Concerns

October 29, 1999
- FAA/JAA/Transport Canada News of Interest
- General Session—Response to Industry Issues and Concerns

Individuals wishing to attend and participate in the meetings must submit name, address, telephone/fax/email, and citizenship information to the person listed under the title **FOR FURTHER INFORMATION CONTACT** not later than October 20, 1999. The list of attendees must be submitted to the Boeing Aircraft Corporation in advance of the meeting for security reasons and to prepare name badges that must be worn while in the building.

Lodging Arrangements: The Hyatt Arlington Hotel, 1325 Wilson Blvd., Arlington, VA 22209, telephone 703–525–1234, is located directly across the street from the Boeing Aircraft Corporation. A special lodging rate may be obtained by contacting the hotel by electronic mail to the following addresses; *rkurup@wasarpo.hyatt.com* and *csmith@wasarpo.hyatt.comm*. Interested individuals should indicate that lodging is for attendance at the FAA/JAA Harmonization Management Team Meetings at the Boeing Aircraft Corporation. The Hyatt Arlington has a web site at *www.arlington.hyatt.com* for additional information on the hotel and surrounding area.

Participation at the Meetings

The FAA should receive requests from persons who wish to present oral statements at the public meetings no later than October 20, 1999. Such requests should be submitted to Brenda Courtney as listed in the section titled **FOR FURTHER INFORMATION CONTACT** and should include a written summary of oral remarks to be presented, and an estimate of time needed for the presentation. Requests received after the date specified above will be scheduled if time is available; however, the name of those individuals may not appear on the written agenda.

The FAA will prepare a final agenda of speakers, which will be available at the meeting. Every effort will be made to accommodate as many speakers as possible. In addition, the amount of time allocated to each speaker may be less than the amount of time requested.

Meeting Procedures

The following procedures are established to facilitate the meetings:

(1) There will be no admission fee or other charge to attend or to participate in the meeting. The meetings will be open to all persons who have requested in advance to present statements or who register on the day of the meeting subject to availability of space in the meeting room.

(2) There will be morning and afternoon breaks and lunch breaks.

(3) The meetings may adjourn early if scheduled speakers complete their statements in less time than currently is scheduled.

(4) An individual, whether speaking in a personal or a representative capacity on behalf of an organization, may be limited to a 10-minute statement. If possible, we will notify the speaker if additional time is available.

(5) The FAA will try to accommodate all speakers. If the available time does not permit this, speakers generally will be scheduled on a first-come-first-served basis. However, the FAA reserves the right to exclude some speakers if necessary to present a balance of viewpoints and issues.

(6) Sign and oral interpretation can be made available at the meetings, as well as an assistive listening device, if requested at the above number listed under **FOR FURTHER INFORMATION CONTACT** at least 10 calendar days before the meeting.

(7) Representatives of the FAA and JAA will preside over the meetings.

(8) The FAA and JAA will review and consider all material presented by participants at the meetings. Position papers or material presenting views or information related to proposed harmonization initiatives may be accepted at the discretion of the FAA and JAA presiding officers. The FAA requests that persons participating in the meetings provide five (5) copies of all materials to be presented for distribution to the panel members; other copies may be provided to the audience at the discretion of the participant.

(9) Statements made by members of the meeting panel are intended to facilitate discussion of the issues or to clarify issues. Any statement made during the meeting by a member of the panel is not intended to be, and should not be construed as, a position of the FAA or JAA.

(10) The meetings are designed to solicit public views and more complete information on proposed harmonization initiatives. Therefore, the meetings will be conducted in an informal and nonadversarial manner. No individual will be subject to cross-examination by any other participant; however, panel members may ask questions to clarify a statement and to ensure a complete and accurate record.

Issued in Washington, DC, on October 7, 1999.

Brenda D. Courtney,

Manager, Aircraft and Airport Rules Division.

[FR Doc. 99–26799 Filed 10–13–99; 8:45 am]

BILLING CODE 4910–13–M

DEPARTMENT OF TRANSPORTATION

Federal Aviation Administration

RTCA Special Committee 188; Minimum Aviation System Performance Standards for High Frequency Data Link

Pursuant to section 10(a)(2) of the Federal Advisory Committee Act (Pub. L. 92–463), 5 U.S.C., Appendix 2), notice is hereby given for Special Committee 188 meeting to be held November 17, starting at 1 p.m., and at 9 a.m. on November 18–19. The meeting will be held at RTCA, 1140 Connecticut Avenue, NW., Suite 1020, Washington, DC, 20036.

The agenda will include: November 17–18, (1) Working Group (WG)–1, Minimum Aviation System Performance Standards. November 19, Plenary Session: (2) Review ballot comments for draft document, Minimum Operational Performance Standards for Aeronautical Mobile High Frequency Data Link (incorporate accepted ballet comments into the final draft to forward to the Program Management Committee); (3) Review summary of previous meeting; (4) Review of WG–1 status; (5) Review of WG–2 status; (6) Review activities of other Standards Groups; (7) Open discussion; (8) Confirm dates for future meetings; (9) Closing of the public may present oral statements at the meeting. Persons wishing to present statements or obtain information should contact the RTCA Secretariat, 1140 Connecticut Avenue, NW., Suite 1020, Washington, DC, 20036; (202) 833–9339 (phone); (202) 833–9434 (fax); or http://www.rtca.org (web site). Members of the public may present a written statement to the committee at any time.

Issued in Washington, DC, on October 7, 1999.

Janice L. Peters,

Designated Official.

[FR Doc. 99–26800 Filed 10–13–99; 8:45 am]

BILLING CODE 4910–13–M

DEPARTMENT OF TRANSPORTATION

Federal Aviation Administration

RTCA Special Committee 172 Future Air-Ground Communications in the VHF Aeronautical Data Band (118–137 MHz)

Pursuant to section 10(a)(2) of the Federal Advisory Committee Act (Pub. L. 92–463, 5 U.S.C., Appendix 2), notice is hereby given for Special Committee 172 meeting to be held November 8–10, 1999, starting at 9:00 a.m. The meeting will be held at RTCA, 1140 Connecticut Avenue, NW., Suite 1020, Washington, DC 20036.

The agenda will be as follows: Monday, November 8: (1) Plenary Convenes at 9 a.m. for 30 minutes; (2) Introductory Remarks; (3) Review and Approval of the Agenda; (9:30 a.m.) (4) Working Group (WG)–2, VHF Data Radio Signal-in-Space Minimum Aviation System Performance Standards, continues work on VDL Mode 3. Tuesday, November 9: (a.m.) (5) WG–2 continues work on VDL Mode 3; (p.m.) (6) WG–3, Review of VHF Digital Radio Minimum Operational Performance Standards Document progress and furtherance of work. Wednesday, November 10: Plenary reconvenes at 9 a.m.: (7) Review summary minutes of previous plenary meeting; (8) Reports from WG–2 and WG–3 on Activities; (9) Report on ICAO Aeronautical Mobile Communications Panel Working Group activities; (10) EUROCARE WG–47 Report and discuss schedule for further work with WG–3; (11) Review issues list and address future work; (12) Other business; (13) Date and Location of Next Meeting; (p.m.) (14) WG–3 continues.

Attendance is open to the interested public but limited to space availability. With the approval of the chairman, members of the public may present oral statements at the meeting. Persons wishing to present statements or obtain information should contact the RTCA Secretariat, 1140 Connecticut Avenue, NW., Suite 1020, Washington, DC 20036; (202) 833–9339 (phone); (202) 833–9434 (fax); or http://www.rtca.org (web site). Members of the public may present a written statement to the committee at any time.

Issued in Washington, DC, on October 6, 1999.

Janice L. Peters,

Designated Official.

[FR Doc. 99–26801 Filed 10–13–99; 8:45 am]

BILLING CODE 4910–13–M

DEPARTMENT OF TRANSPORTATION

Surface Transportation Board

[STB Finance Docket No. 33441 (Sub-No. 1)]

Paducah & Louisville Railway—Trackage Rights Exemption—CSX Transportation, Inc

CSX Transportation, Inc. (CSXT) has agreed to grant overhead trackage rights to Paducah & Louisville Railway (P&L) over CSXT's rail line between the P&L/CSXT connection at Madisonville, KY, at or near milepost OOH–275, and the Diamond J Mine located on CSXT's Morganfield Branch, at or near milepost MB–294.1, including access to the Western Kentucky Railroad connection at Providence, KY, at or near milepost MB–291.8, for a total distance of approximately 18.8 miles in Hopkins and Webster Counties, KY.

The transaction was scheduled to be consummated on or shortly after October 5, 1999.

The purpose of the trackage rights is to allow P&L to handle movements of coal from the Diamond J Mine and from the Pyro, Kentucky Mine to the GRT Terminal, at Jessup, KY, for barge movements to Alabama Power Company (APC) water served destinations, and to

handle empties via the reverse route.[1] The movements to APC water served destinations are in addition to the coal movements for TVA water served destinations authorized in STB Finance Docket No. 33441. The APC movements will be made pursuant to PAL Tariff A–1097 through December 31, 1999, and thereafter under contract PAL–C–0928.

As a condition to this exemption, any employees affected by the trackage rights will be protected by the conditions imposed in *Norfolk and Western Ry. Co.—Trackage Rights—BN,* 354 I.C.C. 605 (1978), as modified in *Mendocino Coast Ry., Inc.—Lease and Operate,* 360 I.C.C. 653 (1980).

This notice is filed under 49 CFR 1180.2(d)(7). If it contains false or misleading information, the exemption is void *ab initio.* Petitions to revoke the exemption under 49 U.S.C. 10502(d) may be filed at any time. The filing of a petition to revoke will not automatically stay the transaction.

An original and 10 copies of all pleadings, referring to STB Finance Docket No. 33441 (Sub-No. 1), must be filed with the Surface Transportation Board, Office of the Secretary, Case Control Unit, 1925 K Street, NW, Washington, DC 20423–0001. In addition, one copy of each pleading must be served on (1) J. Thomas Garrett, Esq., Paducah & Louisville Railway, 1500 Kentucky Avenue, Paducah, KY 42003, and (2) Fred R. Birkholz, Esq., CSX Transportation, Inc., 500 Water Street, J–150, Jacksonville, FL 32202.

Board decisions and notices are available on our website at ''WWW.STB.DOT.GOV.''

Decided: October 7, 1999.

By the Board, David M. Konschnik, Director, Office of Proceedings.

Vernon A. Williams,

Secretary.

[FR Doc. 99–26832 Filed 10–13–99; 8:45 am]

BILLING CODE 4915–00–P

[1] P&L was previously granted trackage rights to handle movements of coal over the same trackage for barge movements to Tennessee Valley Authority (TVA) water served destinations, and to handle empties over the reverse route. *See Paducah & Louisville Railway—Trackage Rights Exemption—CSX Transportation, Inc.,* STB Finance Docket No. 33441 (STB served Aug. 27, 1997).

DEPARTMENT OF TRANSPORTATION

Surface Transportation Board

[Finance Docket No. 30186 (Sub-No. 3)]

Tongue River Railroad Company, Construction and Operation of the Western Alignment in Rosebud and Big Horn Counties, MT

AGENCY: Surface Transportation Board, DOT.

ACTION: Notice of Correction.

SUMMARY: This corrects the Notice of Availability of a Draft Programmatic Agreement and Request for Comments that the Surface Transportation Board's Section of Environmental Analysis published on October 8, 1999. As shown above, the correct docket number for this proceeding is Finance Docket No. 30186 (Sub-No. 3). All other information in the notice is correct.

DATES: October 8, 1999.

FOR FURTHER INFORMATION CONTACT: Dana G. White, Section of Environmental Analysis, Surface Transportation Board, 1925 K Street, NW, Washington, DC 20423, (202) 565–1552 (TDD for the hearing impaired (202) 565–1695).

By the Board, Elaine K. Kaiser, Chief, Section of Environmental Analysis.

Vernon A. Williams,

Secretary.

[FR Doc. 99–26833 Filed 10–13–99; 8:45 am]

BILLING CODE 4915–00–P

Reader Aids

Federal Register

Vol. 64, No. 198

Thursday, October 14, 1999

CUSTOMER SERVICE AND INFORMATION

Federal Register/Code of Federal Regulations

General Information, indexes and other finding aids	**202–523–5227**
Laws	**523–5227**
Presidential Documents	
Executive orders and proclamations	**523–5227**
The United States Government Manual	**523–5227**
Other Services	
Electronic and on-line services (voice)	**523–4534**
Privacy Act Compilation	**523–3187**
Public Laws Update Service (numbers, dates, etc.)	**523–6641**
TTY for the deaf-and-hard-of-hearing	**523–5229**

ELECTRONIC RESEARCH

World Wide Web

Full text of the daily Federal Register, CFR and other publications:

http://www.access.gpo.gov/nara

Federal Register information and research tools, including Public Inspection List, indexes, and links to GPO Access:

http://www.nara.gov/fedreg

E-mail

PENS (Public Law Electronic Notification Service) is an E-mail service for notification of recently enacted Public Laws. To subscribe, send E-mail to

listserv@www.gsa.gov

with the text message:

subscribe PUBLAWS-L your name

Use listserv@www.gsa.gov only to subscribe or unsubscribe to PENS. We cannot respond to specific inquiries.

Reference questions. Send questions and comments about the Federal Register system to:

info@fedreg.nara.gov

The Federal Register staff cannot interpret specific documents or regulations.

FEDERAL REGISTER PAGES AND DATE, OCTOBER

53179–53580 1
53581–53882 4
53883–54198 5
54199–54498 6
54499–54758 7
54759–55114 8
55115–55404 12
55405–55614 13
55615–55808 14

CFR PARTS AFFECTED DURING OCTOBER

At the end of each month, the Office of the Federal Register publishes separately a List of CFR Sections Affected (LSA), which lists parts and sections affected by documents published since the revision date of each title.

3 CFR

Proclamations:
4865 (*See* Memorandum of April 16, 1999) 53883
6763 (See Proclamation 7235) 55611
7227 53877
7228 54193
7229 54195
7230 54197
7231 54755
7232 54757
7233 54759
7234 55405
7235 55611
7236 55613
7237 55615
7238 55617
7239 55619

Executive Orders:
11145 (Amended by EO 13138) 53879
11183 (Amended by EO 13138) 53879
11287 (Amended by EO 13138) 53879
12131 (Amended by EO 13138) 53879
12196 (Amended by EO 13138) 53879
12216 (Amended by EO 13138) 53879
12345 (Amended by EO 13138) 53879
12367 (Amended by EO 13138) 53879
12382 (Amended by EO 13138) 53879
12473 (Amended by EO 13140) 55115
12478 (See EO 13140 55115
12550 (See EO 13140) 55115
12586 (See EO 13140) 55115
12708 (See EO 13140) 55115
12767 (See EO 13140) 55115
12852 (Revoked by EO 13138) 53879
12871 (Amended by EO 13138) 53879
12876 (Amended by EO 13138) 53879
12882 (Amended by EO 13138) 53879
12888 (See EO 13140) 55115
12900 (Amended by EO 13138) 53879
12905 (Amended by EO 13138) 53879
12936 (See EO 13140) 55115
12960 (See EO 13140) 55115
12961 (Revoked by EO 13138) 53879
12994 (Amended by EO 13138) 53879
13010 (Revoked in part by EO 13138) 53879
13017 (Revoked by EO 13138) 53879
13021 (Amended by EO 13138) 53879
13037 (Revoked by EO 13138) 53879
13038 (Revoked by EO 13138) 53879
13050 (Revoked by EO 13138) 53879
13062 (Superseded in part by EO 13138) 53879
13086 (See EO 13140) 55115
13115 (Amended by EO 13138) 53879
13138 53879
13139 54175
13140 55115

Administrative Orders:
Memorandums:
April 16, 1999 53883
Presidential Determinations:
No. 99–38 of September 21, 1999 53573
No. 99–39 of September 21, 1999 53575
No. 99–40 of September 21, 1999 53577
No. 99–41 of September 22, 1999 53579
No. 99–42 of September 29, 1999 54499
No. 99–43 of September 30, 1999 54501
No. 99–44 of September 30, 1999 54503
No. 99–45 of September 30, 1999 53505

5 CFR

532 53179
831 53581
842 53581
870 54761
1201 54507

7 CFR

210 55407
215 55407
220 55407
235 55407
245 55407
735 54508
915 53181
923 53885
944 53181
1000 53885
1001 53885
1002 53885
1004 53885
1005 53885
1006 53885
1007 53885
1012 53885
1013 53885
1030 53885
1032 53885
1033 53885
1036 53885
1040 53885
1044 53885
1046 53885
1049 53885
1050 53885
1064 53885
1065 53885
1068 53885
1076 53885
1079 53885
1106 53885
1124 53885
1126 53885
1131 53885
1134 53885
1135 53885
1137 53885
1138 53885
1139 53885
1755 53886

8 CFR

Proposed Rules:
Ch. 1 54794

9 CFR

317 53186
381 53186

10 CFR

20 ..... 54543, 55524
50 53582
72 53582
431 54114
Proposed Rules:
2 55176
50 53270

11 CFR

110 55125
Proposed Rules:
100 55440
102 55440
104 55440

12 CFR

204 53617
262 53188
602 54511
612 55621
614 55621
618 55621
910 55125

14 CFR

25 54761
36 55598
39 ..... 53189, 53191, 53193, 53620, 53621, 53623, 53625, 54199, 54200, 54202, 54512, 54513, 54515, 54517, 54518, 54763, 54767, 54769, 54770, 54773, 54774, 55407, 55409, 55411, 55413, 55414, 55416, 55621, 55624
71 ..... 53627, 53887, 53888, 53889, 53890, 53891, 53892, 53893, 53894, 53895, 53896, 53898, 53899, 54203, 54204, 54205, 54206, 55131
93 53558
97 ..... 55132, 55133, 55135
Proposed Rules:
39 ..... 53275, 53951, 53953, 54227, 54229, 54230, 54232, 54234, 54237, 54239, 54240, 54242, 54246, 54248, 54249, 54580, 54582, 54584, 54587, 54589, 54591, 54594, 54596, 54598, 54795, 54797, 54799, 54801, 54804, 54808, 54811, 54815, 54818, 54822, 54826, 54829, 54833, 55177, 55181, 55184, 55188, 55191, 55195, 55196, 55197, 55200, 55204, 55207, 55211, 55440, 55636, 55638, 55640, 55642, 55644
71 ..... 53956, 53957
193 53958
450 54448

15 CFR

774 54520
902 54732
Proposed Rules:
30 53861
732 53854
740 53854
743 53854
748 53854
750 53854
752 53854
758 53854
762 53854
772 53854

17 CFR

210 53900
228 53900
229 53900
230 53900
239 53900
240 53900
249 53900
260 53900
Proposed Rules:
210 55648
228 55648
229 55648
240 55648

18 CFR

2 54522
157 54522
284 54522
380 54522
385 54522
Proposed Rules:
385 53959

19 CFR

122 53627

20 CFR

Proposed Rules:
404 55214
422 55216
718 54966
722 54966
725 54966
726 54966
727 54966

21 CFR

Ch. II 54794
50 54180
178 53925
312 54180
558 53926
878 53927
900 53195
Proposed Rules:
5 53281
25 53281
314 53960
500 53281
510 53281
558 53281
601 53960
880 53294

22 CFR

Ch. V 54538
40 55417
42 55417
171 54538
514 53928
Proposed Rules:
194 53632

24 CFR

200 53930
882 53868
888 53450

25 CFR

516 54541

26 CFR

1 55137
Proposed Rules:
1 54836

27 CFR

1 54776
47 55625
55 55625

28 CFR

Ch. I 54794
Proposed Rules:
571 53872

30 CFR

250 53195
948 53200
950 53202
Proposed Rules:
250 53298
915 54840
946 54843
948 54845

32 CFR

1800 53769

33 CFR

100 ..... 53208, 53628
117 ..... 53209, 54776, 55137, 55419
165 ..... 55138, 55420
Proposed Rules:
20 53970
100 ..... 54847, 54849
117 55217
165 ..... 54242, 54963
175 53971
207 55441

34 CFR

Proposed Rules:
75 54254

36 CFR

Proposed Rules:
217 59074
219 59074

37 CFR

Proposed Rules:
1 53772
3 53772
5 53772
10 53772

38 CFR

3 54206
17 54207
Proposed Rules:
20 53302

39 CFR

Proposed Rules:
111 54255

40 CFR

52 ..... 53210, 53931, 54559, 55139, 55141, 55421
61 53212
62 55141
81 55421
180 ..... 54218, 54777, 54779
201 55141
271 ..... 55142, 55153, 55629
300 ..... 53213, 53629
Proposed Rules:
49 54851
52 ..... 53303, 53973, 54600, 54601, 54851, 55219, 55220, 55442, 55662, 55667
81 55442
122 53304
123 53304
124 53304
130 53304
131 53304
132 53632
197 53304
258 53976
261 55443
264 54604
271 ..... 55222, 55671

42 CFR

Proposed Rules:
57 54263

58 54263
447 54263

43 CFR

1820 53213
3500 53512
3510 53512
3520 53512
3530 53512
3540 53512
3550 53512
3560 53512
3570 53512
3800 53213

Proposed Rules:

2800 55452
2880 55452

44 CFR

65 ....53931, 53933, 53936
67 ....53938, 53939
206 55158

Proposed Rules:

67 ....53980, 53982

45 CFR

Proposed Rules:

302 55074
303 55074
304 55074
305 55074
308 55102

46 CFR

1 53220
2 53220
4 53220
10 ....53220, 53230
12 53230
15 53220
31 53220
34 53220
38 53220
52 53220
53 53220
54 53220
56 53220
57 53220
58 53220
59 53220
61 53220
63 53220
64 53220
67 53220
68 53220
69 53220
76 53220
91 53220
95 53220
98 53220
105 53220
107 53220
108 53220
109 53220
118 53220
125 53220
133 53220
147 53220
151 53220
153 53220
160 53220
161 53220
162 53220
167 53220
169 53220
177 53220
181 53220
189 53220
193 53220
197 53220
199 53220
204 54782

Proposed Rules:

5 53970

47 CFR

Ch. I 54561, 55671
0 ....55161, 55425
1 53231
13 53231
20 54564
22 ....53231, 54564
64 ....53242, 53944, 54577, 55163, 55164
73 ....54224, 54225, 54783, 54784, 54785, 54786, 55172, 55173, 55174, 55434
80 53231
87 53231
90 53231
95 53231
97 53231
101 53231

Proposed Rules:

54 53648
61 53648
69 53648
73 ....53655, 54268, 54269, 54270, 55222, 55223, 55452, 55453
76 54854

48 CFR

Ch. 19 54538
1 53264
15 53264
19 53264
52 53264
209 55632
211 55632
214 55632
237 53447
252 55632
415 54963

Proposed Rules:

909 55453
970 55453
1804 54270
1812 54270
1852 54270

49 CFR

172 54730
1002 53264
1003 53264
1007 53264
1011 53264
1012 53264
1014 53264
1017 53264
1018 53264
1019 53264
1021 53264
1034 53264
1039 53264
1100 53264
1101 53264
1103 53264
1104 53264
1105 53264
1113 53264
1133 53264
1139 53264
1150 53264
1151 53264
1152 53264
1177 53264
1180 53264
1184 53264

Proposed Rules:

661 54855

50 CFR

216 53269
223 55434
600 54786
635 ....53949, 54577, 55633
648 54732
660 54786
679 ....53630, 53950, 54225, 54578, 54791, 54792, 55438, 55634

Proposed Rules:

17 53655
648 55688
660 ....54272, 55689
679 53305

REMINDERS

The items in this list were editorially compiled as an aid to Federal Register users. Inclusion or exclusion from this list has no legal significance.

RULES GOING INTO EFFECT OCTOBER 14, 1999

AGRICULTURE DEPARTMENT

Food Safety and Inspection Service

Meat and poultry inspection:
- Countries eligible to export poultry products to United States; addition of Mexico to list; published 9-14-99

DEFENSE DEPARTMENT

Acquisition regulations:
- Brand name or equal purchase descriptions; published 10-14-99
- Congressional Medal of Honor; published 10-14-99

GOVERNMENT ETHICS OFFICE

Government ethics:
- Public financial disclosure gifts waiver provision; published 9-14-99

HOUSING AND URBAN DEVELOPMENT DEPARTMENT

Public and Indian housing:
- Drug elimination programs; formula allocation funding system; published 9-14-99

COMMENTS DUE NEXT WEEK

AGRICULTURE DEPARTMENT

Agricultural Marketing Service

Tomatoes grown in—
- Florida; comments due by 10-19-99; published 8-20-99

Walnuts grown in—
- California; comments due by 10-18-99; published 8-19-99

AGRICULTURE DEPARTMENT

Rural Utilities Service

Telecommunications loan:
- General policies, types of loans and loan requirements; comments due by 10-18-99; published 9-17-99

Telecommunications loans:
- General policies, types of loans and loan requirements; comments due by 10-18-99; published 9-17-99

COMMERCE DEPARTMENT

Export Administration Bureau

Export administration regulations:
- Commercial charges and devices containing energetic materials; exports and reexports; comments due by 10-18-99; published 9-1-99

COMMERCE DEPARTMENT

National Oceanic and Atmospheric Administration

Fishery conservation and management:
- Caribbean, Gulf, and South Atlantic fisheries—
  - Gulf of Mexico Region fishery management plans; comments due by 10-18-99; published 8-18-99
- Northeastern United States fisheries—
  - Atlantic herring; comments due by 10-18-99; published 9-16-99

CONSUMER PRODUCT SAFETY COMMISSION

Consumer Product Safety Act:
- Multi-purpose lighters; child resistance standard; comments due by 10-18-99; published 8-4-99

DEFENSE DEPARTMENT

Civilian health and medical program of uniformed services (CHAMPUS):
- Prosthetic devices; comments due by 10-19-99; published 8-20-99

ENVIRONMENTAL PROTECTION AGENCY

Air programs; approval and promulgation; State plans for designated facilities and pollutants:
- Arizona; comments due by 10-20-99; published 9-20-99
- Delaware; comments due by 10-18-99; published 9-17-99
- Delaware; correction; comments due by 10-18-99; published 9-29-99
- Nevada; comments due by 10-20-99; published 9-20-99

Air quality implementation plans; approval and promulgation; various States:
- Arizona; comments due by 10-20-99; published 9-20-99
- California; comments due by 10-22-99; published 9-22-99
- Nevada; comments due by 10-21-99; published 10-1-99
- Oregon; comments due by 10-21-99; published 9-21-99
- South Dakota; comments due by 10-21-99; published 9-21-99

Hazardous waste:
- Identification and listing—
  - Dye and pigment industries; comments due by 10-21-99; published 9-8-99

Pesticides; tolerances in food, animal feeds, and raw agricultural commodities:
- Glufosinate ammonium; comments due by 10-18-99; published 8-18-99
- Pyriproxyfen; comments due by 10-18-99; published 8-18-99

Superfund program:
- National oil and hazardous substances contingency plan—
  - National priorities list update; comments due by 10-18-99; published 9-17-99
  - National priorities list update; comments due by 10-18-99; published 9-17-99
  - National priorities list; update; comments due by 10-18-99; published 9-17-99

Water programs:
- Clean Water Act—
  - Water quality planning and management; comments due by 10-22-99; published 8-23-99
  - Water quality planning and management; National Pollutant Discharge Elimination System program and Federal antidegradation policy; comments due by 10-22-99; published 8-23-99

FEDERAL COMMUNICATIONS COMMISSION

Radio frequency devices:
- Digital television receivers; closed captioning requirements; comments due by 10-18-99; published 8-2-99

Radio stations; table of assignments:
- Oregon; comments due by 10-18-99; published 9-10-99

GENERAL SERVICES ADMINISTRATION

Acquisition regulations:
- Architect-engineer procurements; selection criteria; comments due by 10-18-99; published 8-17-99

HEALTH AND HUMAN SERVICES DEPARTMENT

Food and Drug Administration

Human drugs:
- Topical antifungal products (OTC); tentative final monograph; comments due by 10-20-99; published 7-22-99

HEALTH AND HUMAN SERVICES DEPARTMENT

Health Care Financing Administration

Group and individual health insurance markets; Federal enforcement; comments due by 10-19-99; published 8-20-99

Medicare:
- Graduate medical education; incentive payments under plans for voluntary reduction in number of residents; comments due by 10-18-99; published 8-18-99

HOUSING AND URBAN DEVELOPMENT DEPARTMENT

Acquisition regulations:
- Miscellaneous amendments; comments due by 10-22-99; published 8-23-99

INTERIOR DEPARTMENT

Minerals Management Service

Royalty management:
- Federal geothermal resources valuation; comments due by 10-18-99; published 8-19-99

LABOR DEPARTMENT

Occupational Safety and Health Administration

Construction safety and health standards:
- Fall protection; comments due by 10-22-99; published 7-14-99

MANAGEMENT AND BUDGET OFFICE

Federal Procurement Policy Office

Acquisition regulations:
- Cost Accounting Standards Board—
  - Cost accounting practices; changes; comments due by 10-19-99; published 8-20-99

NUCLEAR REGULATORY COMMISSION

Radiation protection standards:

Criticality guidance for low-level waste; proposed compatibility designation ange; comments due by 10-20-99; published 9-20-99

Spent nuclear fuel and high-level radioactive waste; independent storage; licensing requirements:

Approved spent fuel storage casks; list additions; comments due by 10-22-99; published 9-22-99

POSTAL RATE COMMISSION

Practice and procedure:

Library reference rule; comments due by 10-20-99; published 9-30-99

RAILROAD RETIREMENT BOARD

Emergency regulations:

Plan of operation during national emergency; procedures update; comments due by 10-18-99; published 8-17-99

TRANSPORTATION DEPARTMENT

Federal Aviation Administration

Air carrier certification and operations:

Aging airplane safety; comments due by 10-18-99; published 8-18-99

Airworthiness directives:

Airbus; comments due by 10-20-99; published 9-20-99

Boeing; comments due by 10-18-99; published 9-2-99

Eurocopter France; comments due by 10-22-99; published 8-23-99

Airworthiness standards:

Transport category airplanes—

Landing gear shock absorption test requirements; comments due by 10-18-99; published 6-18-99

Class E airspace; comments due by 10-18-99; published 8-27-99

Schools and other certificated agencies:

Repair stations; Part 145 review; comments due by 10-19-99; published 6-21-99

TREASURY DEPARTMENT

Internal Revenue Service

Procedure and administration:

Compromises of internal revenue taxes; cross reference; comments due by 10-19-99; published 7-21-99

LIST OF PUBLIC LAWS

This is a continuing list of public bills from the current session of Congress which have become Federal laws. It may be used in conjunction with ''P L U S'' (Public Laws Update Service) on 202–523–6641. This list is also available online at http://www.nara.gov/fedreg.

The text of laws is not published in the **Federal Register** but may be ordered in ''slip law'' (individual pamphlet) form from the Superintendent of Documents, U.S. Government Printing Office, Washington, DC 20402 (phone, 202–512–1808). The text will also be made available on the Internet from GPO Access at http://www.access.gpo.gov/nara/index.html. Some laws may not yet be available.

H.R. 2084/P.L. 106–69

Department of Transportation and Related Agencies Appropriations Act, 2000 (Oct. 9, 1999; 113 Stat. 986)

S. 1606/P.L. 106–70

To extend for 9 additional months the period for which chapter 12 of title 11, United States Code, is reenacted. (Oct. 9, 1999; 113 Stat. 1031)

S. 249/P.L. 106–71

Missing, Exploited, and Runaway Children Protection Act (Oct. 12, 1999; 113 Stat. 1032)

Last List October 8, 1999

Public Laws Electronic Notification Service (PENS)

PENS is a free electronic mail notification service of newly enacted public laws. To subscribe, go to www.gsa.gov/archives/publaws-l.html or send E-mail to **listserv@www.gsa.gov** with the following text message:

SUBSCRIBE PUBLAWS-L Your Name.

Note: This service is strictly for E-mail notification of new laws. The text of laws is not available through this service. **PENS** cannot respond to specific inquiries sent to this address.