AUTHENTICATED
U.S. GOVERNMENT
INFORMATION
GPO

Federal Register

3–22–00 Wednesday
Vol. 65 No. 56 Mar. 22, 2000
Pages 15203–15520

The **FEDERAL REGISTER** is published daily, Monday through Friday, except official holidays, by the Office of the Federal Register, National Archives and Records Administration, Washington, DC 20408, under the Federal Register Act (44 U.S.C. Ch. 15) and the regulations of the Administrative Committee of the Federal Register (1 CFR Ch. I). The Superintendent of Documents, U.S. Government Printing Office, Washington, DC 20402 is the exclusive distributor of the official edition.

The **Federal Register** provides a uniform system for making available to the public regulations and legal notices issued by Federal agencies. These include Presidential proclamations and Executive Orders, Federal agency documents having general applicability and legal effect, documents required to be published by act of Congress, and other Federal agency documents of public interest.

Documents are on file for public inspection in the Office of the Federal Register the day before they are published, unless the issuing agency requests earlier filing. For a list of documents currently on file for public inspection, see http://www.nara.gov/fedreg.

The seal of the National Archives and Records Administration authenticates the Federal Register as the official serial publication established under the Federal Register Act. Under 44 U.S.C. 1507, the contents of the **Federal Register** shall be judicially noticed.

The **Federal Register** is published in paper and on 24x microfiche. It is also available online at no charge as one of the databases on GPO Access, a service of the U.S. Government Printing Office.

The online edition of the **Federal Register** is issued under the authority of the Administrative Committee of the Federal Register as the official legal equivalent of the paper and microfiche editions (44 U.S.C. 4101 and 1 CFR 5.10). It is updated by 6 a.m. each day the **Federal Register** is published and it includes both text and graphics from Volume 59, Number 1 (January 2, 1994) forward.

GPO Access users can choose to retrieve online **Federal Register** documents as TEXT (ASCII text, graphics omitted), PDF (Adobe Portable Document Format, including full text and all graphics), or SUMMARY (abbreviated text) files. Users should carefully check retrieved material to ensure that documents were properly downloaded.

On the World Wide Web, connect to the **Federal Register** at http://www.access.gpo.gov/nara. Those without World Wide Web access can also connect with a local WAIS client, by Telnet to swais.access.gpo.gov, or by dialing (202) 512-1661 with a computer and modem. When using Telnet or modem, type swais, then log in as guest with no password.

For more information about GPO Access, contact the GPO Access User Support Team by E-mail at gpoaccess@gpo.gov; by fax at (202) 512–1262; or call (202) 512–1530 or 1–888–293–6498 (toll free) between 7 a.m. and 5 p.m. Eastern time, Monday–Friday, except Federal holidays.

The annual subscription price for the **Federal Register** paper edition is $555, or $607 for a combined **Federal Register,** Federal Register Index and List of CFR Sections Affected (LSA) subscription; the microfiche edition of the **Federal Register** including the Federal Register Index and LSA is $220. Six month subscriptions are available for one-half the annual rate. The charge for individual copies in paper form is $8.00 for each issue, or $8.00 for each group of pages as actually bound; or $1.50 for each issue in microfiche form. All prices include regular domestic postage and handling. International customers please add 25% for foreign handling. Remit check or money order, made payable to the Superintendent of Documents, or charge to your GPO Deposit Account, VISA, MasterCard or Discover. Mail to: New Orders, Superintendent of Documents, P.O. Box 371954, Pittsburgh, PA 15250–7954.

There are no restrictions on the republication of material appearing in the **Federal Register.**

How To Cite This Publication: Use the volume number and the page number. Example: 65 FR 12345.

Printed on recycled paper.

SUBSCRIPTIONS AND COPIES

PUBLIC	
Subscriptions:	
Paper or fiche	**202–512–1800**
Assistance with public subscriptions	**512–1806**
General online information	**202–512–1530; 1–888–293–6498**
Single copies/back copies:	
Paper or fiche	**512–1800**
Assistance with public single copies	**512–1803**
FEDERAL AGENCIES	
Subscriptions:	
Paper or fiche	**523–5243**
Assistance with Federal agency subscriptions	**523–5243**

FEDERAL REGISTER WORKSHOP

THE FEDERAL REGISTER: WHAT IT IS AND HOW TO USE IT

FOR: Any person who uses the Federal Register and Code of Federal Regulations.

WHO: Sponsored by the Office of the Federal Register.

WHAT: Free public briefings (approximately 3 hours) to present:

1. The regulatory process, with a focus on the Federal Register system and the public's role in the development regulations.
2. The relationship between the Federal Register and Code of Federal Regulations.
3. The important elements of typical Federal Register documents.
4. An introduction to the finding aids of the FR/CFR system.

WHY: To provide the public with access to information necessary to research Federal agency regulations which directly affect them. There will be no discussion of specific agency regulations.

WASHINGTON, DC

WHEN: April 18, 2000

WHERE: Conference Room, Suite 700
Office of the Federal Register
800 North Capitol Street, NW.
Washington, DC
(3 blocks north of Union Station Metro)

RESERVATIONS: 202–523–4538

Contents

Federal Register

Vol. 65, No. 56

Wednesday, March 22, 2000

Agricultural Marketing Service
RULES
Avocados grown in—
Florida, 15203–15205
Nectarines and peaches grown in—
California, 15205–15214
Raisins produced from grapes grown in—
California, 15214–15216

Agriculture Department
See Agricultural Marketing Service
See Animal and Plant Health Inspection Service
See Commodity Credit Corporation
See Farm Service Agency
See Forest Service
See Rural Business-Cooperative Service
See Rural Utilities Service
NOTICES
Meetings:
21st Century Production Agriculture Commission, 15299

Animal and Plant Health Inspection Service
RULES
Interstate transportation of animals and animal products (quarantine):
Land tortoises, 15216–15218
NOTICES
Agency information collection activities:
Proposed collection; comment request, 15299–15300

Children and Families Administration
See Refugee Resettlement Office
NOTICES
Grants and cooperative agreements; availability, etc.:
Head Start—
National Head Start Fellows Program, 15336–15337
State Developmental Disabilities Councils and Protection and Advocacy Programs; Federal allotments, 15338–15340

Coast Guard
RULES
Drawbridge operations:
Michigan, 15238–15240
PROPOSED RULES
Ports and waterways safety:
Naval Station Newport, RI; safety zone, 15285–15286
Newport, RI; safety zone, 15283–15285

Commerce Department
See Foreign-Trade Zones Board
See International Trade Administration
See National Oceanic and Atmospheric Administration

Committee for the Implementation of Textile Agreements
NOTICES
Cotton, wool, and man-made textiles:
Belarus, 15315–15316

Commodity Credit Corporation
NOTICES
Agency information collection activities:
Proposed collection; comment request, 15300

Corporation for National and Community Service
NOTICES
Grants and cooperative agreements; availability, etc.:
AmeriCorps* VISTA programs—
Indian Tribal needs, 15316–15318

Defense Department
NOTICES
Agency information collection activities:
Proposed collection; comment request, 15319
Defense Production Act:
Defense trade offsets; reducing or eliminating adverse effects; information request, 15318–15319

Education Department
NOTICES
Agency information collection activities:
Proposed collection; comment request, 15319–15320
Submission for OMB review; comment request, 15320–15321

Employment and Training Administration
NOTICES
Adjustment assistance:
Energy Knits Co. et al., 15356–15357
Tony Lama Boot Co., 15357
Agency information collection activities:
Proposed collection; comment request, 15357–15358
Federal-State unemployment compensation program:
Extended benefit periods; changes, 15358
NAFTA transitional adjustment assistance:
Levi Strauss & Co., 15359–15360
Nocona Boot Co., 15360
Ritvik Holdings, Inc., 15360
Todd Products Corp., 15358–15359
Tony Lama Boot Co., 15360

Energy Department
See Federal Energy Regulatory Commission
RULES
Nuclear activities; procedural rules; general statement of enforcement policy, 15218–15221
NOTICES
Grants and cooperative agreements; availability, etc.:
Tribal Colleges and Universities; Potential Applications of Renewable Energy Technologies; Feasibility Studies, 15321

Environmental Protection Agency
RULES
Air quality implementation plans; approval and promulgation; various States:
California, 15240–15244
Oregon, 15244–15248
Pesticides; tolerances in food, animal feeds, and raw agricultural commodities:
Cucurbitacins, 15248–15252
PROPOSED RULES
Air quality implementation plans; approval and promulgation; various States:
California, 15286–15290
Oregon, 15287

NOTICES
Grants and cooperative agreements; availability, etc.:
Regional Pesticide Environmental Stewardship Program, 15328–15330
State and Tribal Assistance Grants, 15330
Reports and guidance documents; availability, etc.:
Food Quality Protection Act; science policy issues—Choosing Percentile of Acute Dietary Exposure as Threshold of Regulatory Concern, 15330–15333

Farm Service Agency
NOTICES
Agency information collection activities:
Proposed collection; comment request, 15300–15301

Federal Aviation Administration
RULES
Airworthiness directives:
Aerospatiale, 15226–15230
British Aerospace, 15230–15232
Cessna, 15232–15234
PROPOSED RULES
Airworthiness directives:
Raytheon, 15278–15280
Sikorsky, 15280–15282
Class E airspace, 15282–15283
NOTICES
Exemption petitions; summary and disposition, 15404

Federal Deposit Insurance Corporation
NOTICES
Agency information collection activities:
Proposed collection; comment request, 15333–15334

Federal Election Commission
RULES
Reports by political committees:
Campaign finance reports and statements; copies filed with State officers; transmittal to Congress, 15221–15224
PROPOSED RULES
Presidential primary and general election candidates; public financing:
Eligibility requirements and funding expenditure and repayment procedures; termination, 15273–15275

Federal Energy Regulatory Commission
RULES
Natural gas companies (Natural Gas Act):
Landowner notification, expanded categorical exclusions, and other environmental filing requirements, 15234–15238
NOTICES
Electric rate and corporate regulation filings:
Louisiana Generating LLC et al., 15325–15327
North Hartland, LLC, et al., 15327–15328
Environmental statements; notice of intent:
S.D. Warren Co., 15324
Hydroelectric applications, 15323
Applications, hearings, determinations, etc.:
Eastern Shore Natural Gas Co., 15321–15322
Guardian Pipeline, L.L.C., 15322
Gulf States Transmission Corp., 15322
Koch Gateway Pipeline Co., 15322
Northern Natural Gas Co., 15322–15323
Portland General Electric Co. et al., 15323–15324
Statoil Energy Trading, Inc., et al., 15324
Transcontinental Gas Pipe Line Corp., 15324–15325
Wyoming Interstate Co., Ltd., 15325

Federal Maritime Commission
RULES
Ocean transportation intermediaries; individual contemporaneously acting as qualifying individual for ocean freight forwarder and non-vessel common carrier, 15252–15254
NOTICES
Ocean transportation intermediary licenses:
Global Total Logistics, LLC, 15334

Federal Railroad Administration
PROPOSED RULES
Railroad safety:
Locomotive horns use at highway-rail grade crossings; requirement for sounding
Hearings, 15298

Federal Reserve System
NOTICES
Banks and bank holding companies:
Formations, acquisitions, and mergers, 15334

Food and Drug Administration
NOTICES
Agency information collection activities:
Proposed collection; comment request, 15340–15343
Submission for OMB review; comment request, 15343–15345
Meetings:
Arthritis Advisory Committee, 15344
Pharmaceutical Science Advisory Committee, 15344

Foreign Claims Settlement Commission
NOTICES
Meetings; Sunshine Act, 15354

Foreign-Trade Zones Board
NOTICES
Applications, hearings, determinations, etc.:
Florida
Coastal Fuels Marketing, Inc.; fuel distribution terminal, 15304–15305
Washington
Tesoro Petroleum Corp.; oil refinery complex, 15305

Forest Service
NOTICES
Environmental statements; notice of intent:
Allgeheny National Forest, PA, 15301
Idaho Panhandle National Forests, ID, 15301–15303
National Forest System lands:
Ski area permit actions; categorical exclusion, 15303

General Accounting Office
RULES
Personnel Appeals Board; procedural rules, 15203
NOTICES
Meetings:
Federal Accounting Standards Advisory Board, 15334–15335

General Services Administration
NOTICES
Environmental statements; notice of intent:
Washington, DC; Transportation Department; lease acquisition of new or renovated headquarters, 15335–15336

Health and Human Services Department
See Children and Families Administration
See Food and Drug Administration
See National Institutes of Health
See Refugee Resettlement Office
See Substance Abuse and Mental Health Services Administration
RULES
Health resources development:
Organ procurement and transplantation network; operation and performance goals; response to comments, 15252

Housing and Urban Development Department
RULES
Low income housing:
Housing assistance payments (Section 8)—
Multifamily housing mortgage and housing assistance restructuring program (mark-to-market program), 15452–15498

Immigration and Naturalization Service
NOTICES
Agency information collection activities:
Proposed collection; comment request, 15354–15356

Interior Department
See Land Management Bureau
See National Park Service
See Reclamation Bureau

International Trade Administration
NOTICES
Antidumping:
Oil country tubular goods from—
Japan, 15305–15307

International Trade Commission
NOTICES
Import investigations:
Ammonium nitrate from—
Russia, 15353
Uranium from—
Various countries, 15353
Security procedures for persons delivering/picking up packages and documents, 15353–15354

Justice Department
See Foreign Claims Settlement Commission
See Immigration and Naturalization Service

Labor Department
See Employment and Training Administration
See Pension and Welfare Benefits Administration

Land Management Bureau
NOTICES
Meetings:
Colorado wild horse management; helicopter and motor vehicle use; public hearing [Editorial Note: This document, published at 65 FR 13987 in the [**Federal Register** of March 15, 2000, was incorrectly listed as ''Wyoming wild horse management...'' in that issue's table of contents.]
Closure of public lands:
Nevada, 15350

National Aeronautics and Space Administration
NOTICES
Meetings:
Advisory Council task forces, 15370

National Archives and Records Administration
NOTICES
Agency records schedules; availability, 15370–15373

National Credit Union Administration
RULES
Credit unions:
Organization and operations—
Overdraft policy, 15224–15226
PROPOSED RULES
Credit unions:
Regulatory flexibility and exemption program, 15275–15278

National Highway Traffic Safety Administration
RULES
Anthropomorphic test devices:
Occupant crash protection—
Hybrid III test dummies; 3-year-old child dummy; design and performance specifications, 15254–15271

National Institutes of Health
NOTICES
Grants and cooperative agreements; availability, etc.:
National Cancer Institute—
Steroid derivatives with paclitaxel-like activity, 15347–15348
Targeted screening for inhibitors of human herpesvirus 8 DNA polymerase activity, 15345–15347
Meetings:
National Institute of Diabetes and Digestive and Kidney Diseases, 15348
National Institute of General Medical Sciences, 15349
National Institute of Mental Health, 15348–15349

National Oceanic and Atmospheric Administration
RULES
Fishery conservation and management:
Alaska; fisheries of Exclusive Economic Zone—
Pollock, 15271–15272
NOTICES
Grants and cooperative agreements; availability, etc.:
Chesapeake Bay stock assessments to encourage research projects for improvement in Chesapeake Bay fishery stock conditions, 15307–15312
Permits
Endangered and threatened species, 15312–15315

National Park Service
NOTICES
Grants and cooperative agreements; availability, etc.:
Glacier Bay National Park, AK; Dungeness crab commercial fishery crewmember interim compensation program, 15350–15351

Nuclear Regulatory Commission
NOTICES
Agency information collection activities:
Submission for OMB review; comment request, 15373
Export and import license applications for nuclear facilities and materials:
Poco Graphite, Inc., 15373

Meetings:
Standard Review Plan; stakeholders, 15374–15375
Operating licenses, amendments; no significant hazards considerations; biweekly notices, 15375–15397
Regulatory guides; issuance, availability, and withdrawal, 15397–15398
Applications, hearings, determinations, etc.:
Tennessee Valley Authority, 15373–15374

Pension and Welfare Benefits Administration
NOTICES
Employee benefit plans; prohibited transaction exemptions:
Standard & Poor's et al., 15360–15370

Public Health Service
See Food and Drug Administration
See National Institutes of Health
See Substance Abuse and Mental Health Services Administration

Reclamation Bureau
NOTICES
Environmental statements; availability, etc.:
Republican River basin, NE and KS; long-term water supply contracts; renewal, 15351–15352
Meetings:
Bay-Delta Advisory Council, 15352–15353

Refugee Resettlement Office
RULES
Refugee resettlement program:
Public/private partnership program; refugee cash and medical assistance; requirements, 15410–15450

Research and Special Programs Administration
PROPOSED RULES
Pipeline safety:
Safety regulations; periodic updates, 15290–15297
NOTICES
Meetings:
Pipeline Safety Advisory Committees, 15404–15405

Rural Business-Cooperative Service
NOTICES
Agency information collection activities:
Proposed collection; comment request, 15303–15304

Rural Utilities Service
NOTICES
Agency information collection activities:
Proposed collection; comment request, 15304

Securities and Exchange Commission
PROPOSED RULES
Securities and investment companies:
Mutual fund after-tax returns; disclosure, 15500–15519
NOTICES
Self-regulatory organizations; proposed rule changes:
Chicago Board Options Exchange, Inc., 15398–15399
Municipal Securities Rulemaking Board, 15399–15401
National Association of Securities Dealers, Inc., 15401–15403

State Department
NOTICES
Art objects; importation for exhibition:
Michelangelo to Picasso: Master Drawings from the Collection of the Albertina, Vienna, 15403–15404

Substance Abuse and Mental Health Services Administration
NOTICES
Meetings:
Women's Services Advisory Committee, 15349–15350

Surface Transportation Board
NOTICES
Agreements under sections 5a and 5b; applications for approval, etc.:
Household Goods Carriers Bureau Committee; correction, 15405

Textile Agreements Implementation Committee
See Committee for the Implementation of Textile Agreements

Transportation Department
See Coast Guard
See Federal Aviation Administration
See Federal Railroad Administration
See National Highway Traffic Safety Administration
See Research and Special Programs Administration
See Surface Transportation Board

Twenty-First Century Workforce Commission
NOTICES
Hearings, 15406–15407

Separate Parts In This Issue

Part II
Department of Health and Human Services, Refugee Resettlement Office, 15409–15450

Part III
Department of Housing and Urban Development, 15451–15498

Part IV
Securities and Exchange Commission, 15499–15519

Reader Aids
Consult the Reader Aids section at the end of this issue for phone numbers, online resources, finding aids, reminders, and notice of recently enacted public laws.

CFR PARTS AFFECTED IN THIS ISSUE

A cumulative list of the parts affected this month can be found in the Reader Aids section at the end of this issue.

4 CFR
27 15203
28 15203

7 CFR
915 15203
916 15205
917 15205
989 15214

9 CFR
74 15216
93 15216

10 CFR
820 15218

11 CFR
108 15221
Proposed Rules:
9038 15273

12 CFR
701 15224
Proposed Rules:
742 15275

14 CFR
39 (3 documents) 15226, 15230, 15232
Proposed Rules:
39 (2 documents) 15278, 15280
71 15282

17 CFR
Proposed Rules:
230 15500
239 15500
270 15500
274 15500

18 CFR
157 15234
380 15234

24 CFR
401 15452
402 15452

33 CFR
117 15238
Proposed Rules:
165 (2 documents) 15283, 15285

40 CFR
52 (2 documents) 15240, 15244
180 15248
Proposed Rules:
52 (3 documents) 15286, 15287

42 CFR
121 15252

45 CFR
400 15410
401 15410

46 CFR
515 15252

49 CFR
572 15254
Proposed Rules:
190 15290
191 15290
192 15290
195 15290
222 15298
229 15298

50 CFR
679 (2 documents) 15271, 15272

Rules and Regulations

Federal Register
Vol. 65, No. 56
Wednesday, March 22, 2000

This section of the FEDERAL REGISTER contains regulatory documents having general applicability and legal effect, most of which are keyed to and codified in the Code of Federal Regulations, which is published under 50 titles pursuant to 44 U.S.C. 1510.

The Code of Federal Regulations is sold by the Superintendent of Documents. Prices of new books are listed in the first FEDERAL REGISTER issue of each week.

GENERAL ACCOUNTING OFFICE PERSONNEL APPEALS BOARD

4 CFR Parts 27 and 28

Procedural Rules

AGENCY: General Accounting Office Personnel Appeals Board.

ACTION: Final rule.

SUMMARY: The General Accounting Office Personnel Appeals Board (PAB) has authority with respect to employment practices within the General Accounting Office (GAO or agency), pursuant to the General Accounting Office Personnel Act of 1980 (GAOPA). The PAB hereby finalizes its regulations to explain that a quorum of three members of the Board may exercise all the powers of the Board, and that a majority of a quorum may act in any matter requiring consideration by the full Board.

DATES: These regulations are effective March 22, 2000.

FOR FURTHER INFORMATION CONTACT: Beth Don, Executive Director, 202–512–6137.

SUPPLEMENTARY INFORMATION: The General Accounting Office Personnel Appeals Board on Tuesday, March 30, 1999, published an interim rule with request for comments by June 1, 1999, amending the PAB regulations. The interim rule conformed the regulations to Board policy recognizing that a quorum of three members of the Board may exercise all the powers of the Board, and that a majority of a quorum may act in any matter requiring consideration by the full Board. No comments on the interim rule were received by the Board.

List of Subjects in 4 CFR Parts 27 and 28

Administrative practice and procedures, Equal employment opportunity, Government employees, Labor-management relations.

For the reasons set forth in the preamble, the General Accounting Office Personnel Appeals Board amends 4 CFR Chapter I, Subchapter B as follows:

PARTS 27 AND 28—GENERAL ACCOUNTING OFFICE PERSONNEL APPEALS BOARD; PROCEDURES APPLICABLE TO CLAIMS CONCERNING EMPLOYMENT PRACTICES AT THE GENERAL ACCOUNTING OFFICE

The interim rule amending 4 CFR parts 27 and 28 which was published at 64 FR 15125 on March 30, 1999, is adopted as a final rule without change.

Michael Wolf,

Chair, Personnel Appeals Board, U.S. General Accounting Office.

[FR Doc. 00–7128 Filed 3–21–00; 8:45 am]

BILLING CODE 1610–02–M

DEPARTMENT OF AGRICULTURE

Agricultural Marketing Service

7 CFR Part 915

[Docket No. FV00–915–1 FIR]

Avocados Grown in South Florida; Relaxation of Container and Pack Requirements

AGENCY: Agricultural Marketing Service, USDA.

ACTION: Final rule.

SUMMARY: The Department of Agriculture (Department) is adopting, as a final rule, with minor editorial changes, the provisions of an interim final rule changing the container and pack requirements prescribed under the Florida avocado marketing order (order). The marketing order regulates the handling of avocados grown in South Florida and is administered locally by the Avocado Administrative Committee (Committee). This rule continues in effect the removal of the requirement that avocados packed in 33-pound containers must weigh at least 16 ounces. This change will provide greater flexibility in avocado packing operations.

EFFECTIVE DATE: April 21, 2000.

FOR FURTHER INFORMATION CONTACT: Doris Jamieson, Marketing Specialist, Southeast Marketing Field Office, Marketing Order Administration Branch, Fruit and Vegetable Programs, AMS, USDA, P.O. Box 2276, Winter Haven, Florida 33883; telephone: (863) 299–4770, Fax: (863) 299–5169; or Anne Dec, Team Leader, Marketing Order Administration Branch, Fruit and Vegetable Programs, AMS, USDA, room 2525–S, P.O. Box 96456, Washington, DC 20090–6456; telephone: (202) 720–2491, Fax: (202) 720–5698.

Small businesses may request information on complying with this regulation by contacting Jay Guerber, Marketing Order Administration Branch, Fruit and Vegetable Programs, AMS, USDA, P.O. Box 96456, room 2525–S, Washington, DC 20090–6456; telephone: (202) 720–2491, Fax: (202)720–5698, or E-mail: Jay.Guerber@usda.gov.

SUPPLEMENTARY INFORMATION: This rule is issued under Marketing Agreement No. 121 and Marketing Order No. 915, both as amended (7 CFR part 915), regulating the handling of avocados grown in South Florida, hereinafter referred to as the ''order.'' The marketing agreement and order are effective under the Agricultural Marketing Agreement Act of 1937, as amended (7 U.S.C. 601–674), hereinafter referred to as the ''Act.''

The Department is issuing this rule in conformance with Executive Order 12866.

This rule has been reviewed under Executive Order 12988, Civil Justice Reform. This rule is not intended to have retroactive effect. This rule will not preempt any State or local laws, regulations, or policies, unless they present an irreconcilable conflict with this rule.

The Act provides that administrative proceedings must be exhausted before parties may file suit in court. Under section 608c(15)(A) of the Act, any handler subject to an order may file with the Secretary a petition stating that the order, any provision of the order, or any obligation imposed in connection with the order is not in accordance with law and request a modification of the order or to be exempted therefrom. A handler is afforded the opportunity for a hearing on the petition. After the hearing the Secretary would rule on the petition. The Act provides that the district court of the United States in any district in which the handler is an inhabitant, or has his or her principal

place of business, has jurisdiction to review the Secretary's ruling on the petition, provided an action is filed not later than 20 days after the date of the entry of the ruling.

Under the terms of the order, fresh market shipments of Florida avocados are required to be inspected and are subject to grade, size, maturity, and pack and container requirements. Pack and container requirements outline the designated net weight of the containers used to pack avocados and the minimum weight of the avocados packed in the containers.

This rule continues in effect the removal of the requirement that avocados packed in 33-pound containers must weigh at least 16 ounces. This change provides greater flexibility in avocado packing operations. The Committee met on September 8, 1999, and unanimously recommended this change.

Section 915.51 of the order provides authority to issue regulations establishing specific pack and container requirements. Section 915.52 further authorizes the Committee to make recommendations to the Secretary to modify, suspend, or terminate regulations, including pack and container requirements. The pack and container requirements are specified under sections 915.305 and 915.306. These sections specify, in part, container weight and other applicable requirements, including the minimum weight of the avocados packed in the containers. Current regulations authorize the use of 33-pound, 31-pound, 24-pound, and 12-pound containers, and 8.5-pound containers for export shipments only.

Before the interim final rule became effective, the requirements of section 915.305(a)(1) specified that avocados packed in 33-pound containers must weigh at least 16 ounces. Avocados weighing less than 16 ounces were to be packed in smaller containers. The Committee has determined that retailers prefer shipments of avocados packed in larger containers. The size of the fruit is not a concern to retailers. By allowing smaller fruit to be packed in the larger containers, the retailer is able to offer avocados to the consumer in a variety of sizes. The larger containers are ideal for displaying the fruit. Upon receipt of the avocado shipment, the retailer can remove the lid from the larger container. Without removing the fruit from the box, fruit can be offered for consumers to purchase. This is time saving for retailers.

Removing the requirement that avocados packed in 33-pound containers weigh at least 16 ounces gives handlers the flexibility to pack both large and small avocados in one container. California avocado handlers have already adopted the practice of shipping smaller avocados in larger containers with a great deal of success. Florida avocado handlers would like to remain competitive with other avocado growing areas. In order to meet the needs of the customer and remain competitive with other avocado handlers, this rule continues the removal of the requirement that avocados packed in 33-pound containers must weigh at least 16 ounces. The avocados must meet all other requirements of the marketing order, including maturity requirements.

In addition, the flexibility to pack both large and small avocados in one container allows handlers to use the smaller avocados to create a tighter pack with less open space inside the containers. The tighter pack restricts movement of the avocados during shipment which prevents damage to the fruit. This improves the quality of the fruit reaching the consumer, saves handling costs, and provides greater returns to the grower.

Section 8e of the Act provides that when certain domestically produced commodities, including avocados, are regulated under a Federal marketing order, imports of that commodity must meet the same or comparable grade, size, quality, and maturity requirements. This rule changes the pack and container requirements currently in effect which do not apply to imports. Therefore, no change is necessary in the avocado import regulations.

Pursuant to requirements set forth in the Regulatory Flexibility Act (RFA), the Agricultural Marketing Service (AMS) has considered the economic impact of this action on small entities. Accordingly, AMS has prepared this final regulatory flexibility analysis.

The purpose of the RFA is to fit regulatory actions to the scale of business subject to such actions in order that small businesses will not be unduly or disproportionately burdened. Marketing orders issued pursuant to the Act, and the rules issued thereunder, are unique in that they are brought about through group action of essentially small entities acting on their own behalf. Thus, both statutes have small entity orientation and compatibility.

There are approximately 141 avocado producers in the production area and approximately 49 avocado handlers subject to regulation under the marketing order. Small agricultural service firms have been defined by the Small Business Administration (SBA) (13 CFR 121.201) as those having annual receipts of less than $5,000,000, and small agricultural producers are defined as those having annual receipts of less than $500,000.

The average price for fresh avocados during the 1998–99 season was $17.90 per 55-pound bushel box equivalent for all domestic shipments and the total shipments were 890,859 bushels. Many avocado handlers ship other tropical fruit and vegetable products which are not included in the Committee's data but would contribute further to handler receipts. Using these prices, about 90 percent of avocado handlers could be considered small businesses under the SBA definition. The majority of Florida avocado producers and handlers may be classified as small entities.

Under sections 915.51 and 915.52 of the marketing order for avocados grown in South Florida, the Committee has the authority to recommend to the Secretary changes to the pack and container requirements for avocados handled under the order. Current pack and container requirements outline the designated net weight of the containers used to pack avocados and the minimum weight of the avocados packed in the containers. Current regulations authorize the use of 33-pound, 31-pound, 24-pound, and 12-pound containers, and 8.5-pound containers for export shipments only.

This rule continues to change section 915.305(a)(1) of the rules and regulations concerning the pack and container requirements for avocados. This rule continues to remove the requirement that avocados packed in 33-pound containers must weigh at least 16 ounces. The avocados must meet all other requirements, including maturity requirements. This change will continue to provide greater flexibility in avocado packing operations.

This rule will have a positive impact on affected entities. The change was recommended to provide additional flexibility in packing avocados. None of the changes are expected to increase costs associated with the pack and container requirements. This rule may, in fact, reduce costs associated with the pack and container requirements.

The Committee believes this change will benefit both large and small packing operations. It is particularly beneficial to small handlers since a single container can be used to ship avocados to retail customers. This reduces the need to maintain a large inventory of smaller containers. Further, the Committee has determined that retailers prefer the larger containers; the size of the fruit in those containers is of lesser concern to the retailer. By allowing smaller fruit to be packed in

the larger containers, the retailer is able to offer avocados to the consumer in a variety of sizes. The larger containers are ideal for displaying the fruit. Upon receipt of the avocado shipment, the retailer can remove the lid from the larger container and, without removing the fruit from the box, fruit can be offered for consumers to purchase. This is time saving for retailers.

Removing the requirement that avocados packed in 33-pound containers weigh at least 16 ounces will continue to give handlers the flexibility to pack both large and small avocados in one container. Florida avocado handlers would like to continue to remain competitive with other avocado growing areas. For example, California avocado handlers have already adopted the practice of shipping smaller avocados in larger containers with a great deal of success. In order to meet the needs of the customer and remain competitive with other avocado handlers, this rule continues to remove the requirement that avocados packed in 33-pound containers must weigh at least 16 ounces. The avocados must meet all other requirements of the marketing order, including maturity requirements.

In addition, the flexibility to pack both large and small avocados in one container allows handlers to use the smaller avocados to create a tighter pack with less open space inside the containers. The tighter pack restricts movement of the avocados during shipment which prevents damage to the fruit. This continues to save handling costs and provides greater returns to the grower.

Other alternatives to the action were considered by the Committee prior to making the recommendation. One alternative discussed by the Committee was to continue to require that avocados packed in 33-pound containers weigh at least 16 ounces. The Committee believed that this alternative provided little benefit and would still limit flexibility.

This rule will not impose any additional reporting or recordkeeping requirements on either small or large avocado handlers. As with all Federal marketing order programs, reports and forms are periodically reviewed to reduce information requirements and duplication by industry and public sector agencies. In addition, the Department has not identified any relevant Federal rules that duplicate, overlap or conflict with this rule.

Further, the Committee's meeting was widely publicized throughout the avocado industry and all interested persons were invited to attend the meeting and participate in Committee deliberations. Like all Committee meetings, the September 8, 1999, meeting was a public meeting and all entities, both large and small, were able to express their views on this issue. The Committee itself is composed of 10 members, of which 5 are growers, 4 are handlers, and one is a public member. Finally, interested persons were invited to submit information on the regulatory and informational impacts of this action on small business.

An interim final rule concerning this action was published in the Federal Register on December 13, 1999. Copies of the rule were mailed by the Committee's staff to all Committee members and avocado handlers. In addition, the rule was made available through the Internet by the Office of the Federal Register. That rule provided for a 60-day comment period which ended February 11, 2000. No comments were received.

Changes to the interim final rule have been made to correct some typographical errors. Editorial changes have also been made to make the language easier to understand.

A small business guide on complying with fruit, vegetable, and specialty crop marketing agreements and orders may be viewed at the following web site: http://www.ams.usda.gov/fv/moab.html. Any questions about the compliance guide should be sent to Jay Guerber at the previously mentioned address in the **FOR FURTHER INFORMATION CONTACT** section.

After consideration of all relevant material presented, including the Committee's recommendation, and other information, it is found that finalizing the interim final rule, with changes, as published in the **Federal Register** (64 FR 69380, December 13, 1999) will tend to effectuate the declared policy of the Act.

List of Subjects 7 CFR Part 915

Avocados, Marketing agreements, Reporting and recordkeeping requirements.

Accordingly, the interim final rule amending 7 CFR part 915 which was published at 64 FR 69380 on December 13, 1999, is adopted as a final rule with the following changes:

PART 915—AVOCADOS GROWN IN SOUTH FLORIDA

1. The authority citation for part 915 continues to read as follows:

Authority: 7 U.S.C. 601–674.

2. In Sec. 915.305, paragraph (a)(1) is revised to read as follows:

§ 915.305 Florida Avocado Container Regulation 5.

(a) * * *

(1) Containers shall not contain less than 33 pounds net weight of avocados, except that for avocados of unnamed varieties, which are avocados that have not been given varietal names, and for Booth 1, Fuchs, and Trapp varieties, such weight shall be not less than 31 pounds. Not more than 10 percent, by count, of the individual containers in any lot may fail to meet the applicable specified weight. No container in any lot may contain a net weight of avocados exceeding 2 pounds less than the specified net weight; or

* * * * *

Dated: March 16, 2000.

Robert C. Keeney,

Deputy Administrator, Fruit and Vegetable Programs.

[FR Doc. 00–7085 Filed 3–21–00; 8:45 am]

BILLING CODE 3410–02–P

DEPARTMENT OF AGRICULTURE

Agricultural Marketing Service

7 CFR Parts 916 and 917

[Docket No. FV00–916–1 IFR]

Nectarines and Peaches Grown in California; Revision of Handling Requirements for Fresh Nectarines and Peaches

AGENCY: Agricultural Marketing Service, USDA.

ACTION: Interim final rule with request for comments.

SUMMARY: This rule revises the handling requirements for California nectarines and peaches by modifying the grade, size, maturity, and container marking requirements for fresh shipments of these fruits, beginning with 2000 season shipments. This rule also modifies the requirements for placement of Federal-State Inspection Service lot stamps for the 2000 season only. The marketing orders regulate the handling of nectarines and peaches grown in California and are administered locally by the Nectarine Administrative and Peach Commodity Committees (committees). This rule enables handlers to continue shipping fresh nectarines and peaches meeting consumer needs in the interest of producers, handlers, and consumers of these fruits.

DATES: Effective April 1, 2000; comments received by May 22, 2000, will be considered prior to issuance of any final rule.

ADDRESSES: Interested persons are invited to submit written comments concerning this rule. Comments must be sent to the Docket Clerk, Fruit and Vegetable Programs, AMS, USDA, room 2525–S, P.O. Box 96456, Washington, DC 20090–6456; Fax: (202) 720–5698, or E-mail: moab.docketclerk@usda.gov. All comments should reference the docket number and the date and page number of this issue of the **Federal Register** and will be made available for public inspection at the Office of the Docket Clerk during regular business hours.

FOR FURTHER INFORMATION CONTACT: Terry Vawter, Marketing Specialist, California Marketing Field Office, Marketing Order Administration Branch, Fruit and Vegetable Programs, AMS, USDA, 2202 Monterey Street, suite 102B, Fresno, California 93721; telephone: (209) 487–5901, Fax: (209) 487–5906; or George Kelhart, Technical Advisor, Marketing Order Administration Branch, Fruit and Vegetable Programs, AMS, USDA, room 2525–S, P.O. Box 96456, Washington, DC 20090–6456; telephone: (202) 720–2491, Fax: (202) 720–5698.

Small businesses may request information on compliance with this regulation by contacting Jay Guerber, Marketing Order Administration Branch, Fruit and Vegetable Programs, AMS, USDA, P.O. Box 96456, room 2525–S, Washington, DC 20090–6456; telephone: (202) 720–2491; Fax: (202) 720–5698, or E-mail: Jay.Guerber@usda.gov.

SUPPLEMENTARY INFORMATION: This rule is issued under Marketing Agreements Nos. 124 and 85, and Marketing Order Nos. 916 and 917 (7 CFR parts 916 and 917) regulating the handling of nectarines and peaches grown in California, respectively, hereinafter referred to as the ''orders.'' The marketing agreements and orders are effective under the Agricultural Marketing Agreement Act of 1937, as amended (7 U.S.C. 601–674), hereinafter referred to as the ''Act.''

The Department of Agriculture (Department) is issuing this rule in conformance with Executive Order 12866.

This rule has been reviewed under Executive Order 12988, Civil Justice Reform. This rule is not intended to have retroactive effect. This rule will not preempt any State or local laws, regulations, or policies, unless they present an irreconcilable conflict with this rule.

The Act provides that administrative proceedings must be exhausted before parties may file suit in court. Under section 608c(15)(A) of the Act, any handler subject to an order may file with the Secretary a petition stating that the order, any provision of the order, or any obligation imposed in connection with the order is not in accordance with law and request a modification of the order or to be exempted therefrom. A handler is afforded the opportunity for a hearing on the petition. After the hearing the Secretary would rule on the petition. The Act provides that the district court of the United States in any district in which the handler is an inhabitant, or has his or her principal place of business, has jurisdiction to review the Secretary's ruling on the petition, provided an action is filed not later than 20 days after the date of the entry of the ruling.

Under the orders, lot stamping, grade, size, maturity, container, and pack requirements are established for fresh shipments of California nectarines and peaches. Such requirements are in effect on a continuing basis. The Nectarine Administrative Committee (NAC) and the Peach Commodity Committee (PCC), which are responsible for local administration of the orders, met on November 30, 1999, and unanimously recommended that these handling requirements be revised for the 2000 season, which begins April 1. The changes: (1) Revise the lot stamping requirements for the 2000 season only; (2) authorize shipments of ''CA Utility'' quality fruit to continue during the 2000 season; (3) eliminate the minimum letter height of maturity marking requirements for all containers; (4) provide a tolerance for the ''Peento'' or ''donut'' types of peaches for healed, non-serious, blossom-end growth cracks; and (5) revise varietal maturity, quality, and size requirements to reflect recent changes in growing conditions.

The committees meet prior to and during each season to review the rules and regulations effective on a continuing basis for California nectarines and peaches under the orders. Committee meetings are open to the public, and interested persons may express their views at these meetings. The Department reviews committee recommendations and information, as well as information from other sources, and determines whether modification, suspension, or termination of the rules and regulations would tend to effectuate the declared policy of the Act.

No official crop estimate was available at the time of the committees' meetings because the nectarine and peach trees were dormant. The committees will recommend a crop estimate at their meetings in early spring. However, preliminary estimates indicate that the 2000 crop will be similar in size and characteristics to the 1999 crop which totaled 20,405,000 boxes of nectarines and 20,460,000 boxes of peaches.

Lot Stamping Requirements

Sections 916.55 and 917.45 of the orders require inspection and certification of nectarines and peaches, respectively, handled by handlers. Sections 916.115 and 917.150 of the nectarine and peach orders' rules and regulations, respectively, require that all exposed or outside containers of nectarines and peaches, and at least 75 percent of the total containers on a pallet, be stamped with the Federal-State Inspection Service (inspection service) lot stamp number after inspection and prior to shipment to show that the fruit has been inspected. These requirements apply except for containers that are loaded directly onto railway cars, or exempted, or mailed directly to consumers in consumer packages.

Lot stamp numbers are assigned to each handler by the inspection service, and are used to identify the handler and the date on which the container was packed. The lot stamp number is also used by the inspection service to identify and locate the corresponding inspector's working papers or notes. Working papers are the documents each inspector completes while performing an inspection on a lot of nectarines or peaches. Information contained in the working papers supports the grade levels certified by the inspector at the time of inspection.

The lot stamp number has value for the industries, as well. The committees utilize the lot stamp numbers and date codes to trace fruit in the container back to the orchard where harvested. This information is essential in providing quick information for a crisis management program instituted by the industries. Without the lot stamp information on each container, the ''trace-back'' effort, as it is called, would be jeopardized.

Recently, several new containers have been introduced for use by nectarine and peach handlers. The boxes are returnable plastic containers which retailers send back to a central clearinghouse after use. Use of these boxes may represent substantial savings to retailers for storage and disposal, as well as for handlers who do not have to pay for traditional containers. Fruit is packed in the boxes by the handler, delivered to the retailer, emptied, and returned to the clearinghouse for cleaning and redistribution. However, because they were designed to be reused, these boxes do not support

markings that are permanently affixed to the container. All markings must be printed on cards which slip into tabs on the front or sides of the containers. The cards are easily inserted and removed, and further contribute to the efficient use of the container.

The cards are a concern for the inspection service and the industries, however. Because of their unique portability, there is some concern that the cards on pallets of inspected containers could easily be moved to pallets of uninspected containers, thus permitting a handler to avoid inspection on a lot or lots of nectarines or peaches. This would also jeopardize the use of the lot stamp numbers for the industries' ''trace back'' program.

To address this concern, the committees have recommended that pallets of inspected fruit be identified with a USDA-approved pallet tag containing the lot stamp number, in addition to the lot stamp number printed on the card on the container. In this way, an audit trail is created, confirming that the lot stamp number on the containers on each pallet correspond to the lot stamp number on the pallet tag.

The inspection service and the committees have presented their concerns to the manufacturers of these types of boxes. One manufacturer has indicated a willingness to address the problem by offering an area on the principle display panel where the container markings will adhere to the box, which will meet the needs of the industries, the inspection service, and the manufacturer. However, the manufacturer believes that this change may not be available in time for the 2000 season. For that reason, the committees further recommended that the proposed modification of the lot stamping requirements be put into place for the 2000 season only.

Thus, §§ 916.115 and 917.150 will be amended to require the lot stamp number to be adhered to a USDA-approved pallet tag, in addition to the requirement that the number be applied to cards on all exposed or outside containers, and not less than 75 percent of the total containers on a pallet.

A conforming change is made to § 917.150 by changing the word ''but'' to ''and,'' making the language in this section similar to that in § 916.115.

Grade and Quality Requirements

Sections 916.52 and 917.41 of the orders authorize the establishment of grade and quality requirements for nectarines and peaches, respectively. Prior to the 1996 season, § 916.356 required nectarines to meet a modified U.S. No. 1 grade. Specifically, nectarines were required to meet U.S. No. 1 grade requirements, except there was a slightly tighter requirement for scarring and a more liberal allowance for misshapen fruit. Prior to the 1996 season, § 917.459 required peaches to meet the requirements of a U.S. No. 1 grade, except for a more liberal allowance for open sutures that were not ''serious damage.''

This rule revises § 916.350, § 916.356, § 917.442, and § 917.459 to permit shipments of nectarines and peaches meeting ''CA Utility'' quality requirements during the 2000 season. (''CA Utility'' fruit is lower in quality than that meeting the modified U.S. No. 1 grade requirements.) Shipments of nectarines and peaches meeting ''CA Utility'' quality requirements were permitted during the 1996 and 1997 seasons, and also during the 1998 and 1999 seasons with slight modifications.

Studies conducted by the NAC and PCC indicate that some consumers, retailers, and foreign importers found the lower quality fruit acceptable in some markets. When shipments of ''CA Utility'' nectarines were first permitted in 1996, they only represented 1.1 percent of all nectarine shipments, or approximately 210,000 boxes. Shipments of ''CA Utility'' peaches represented 1.9 percent of all peach shipments, or 366,000 boxes. By 1998 and 1999, shipments of ''CA Utility'' nectarines represented 4.5 percent and 4.0 percent, respectively, of all nectarine shipments; or approximately 760,000 boxes and 819,600 boxes, respectively. In 1998 and 1999, shipments of ''CA Utility'' peaches represented 3.3 percent and 3.4 percent, respectively, of all peach shipments; or approximately 602,000 boxes and 689,800 boxes, respectively.

For these reasons, the committees unanimously recommended that shipments of ''CA Utility'' quality nectarines and peaches be permitted for the 2000 season with a continuing in-house statistical review. Paragraphs (d) of §§ 916.350 and 917.442, and paragraphs (a)(1) of §§ 916.356 and 917.459 are revised to permit shipments of nectarines and peaches meeting ''CA Utility'' quality requirements during the 2000 season, on the same basis as last season.

In addition, paragraph (a)(1) of § 917.459 is revised to provide a 10 percent tolerance for healed, non-serious, blossom-end growth cracks for the ''Peento'' or ''donut'' varieties of peaches, such as the ''Saturn'' and ''Jupiter'' varieties.

These varieties of peaches characteristically suffer blossom-end (calyx basin) cracks during development. These cracks heal as the growth continues and as the fruit gains size. Generally, the cracks are completely healed by harvest. Peaches with unhealed or serious blossom-end growth cracks at the time of inspection would not be included in U.S. No. 1 or ''CA Utility'' packages. Such a relaxation will permit handlers of the Peento type of peaches to utilize more of these fruit in boxes of U.S. No. 1 peaches, benefitting both handlers and growers of these varieties.

The PCC unanimously recommended this additional tolerance of 10 percent for healed, non-serious, blossom-end growth cracks for the Peento type of peaches, beginning in the 2000 season.

Container Marking Requirements

Sections 916.52 and 917.41 of the nectarine and peach orders, respectively, authorize container marking requirements. Requirements for container markings are specified in §§ 916.350 and 917.442 of the orders' rules and regulations. Container marking requirements include marking of the commodity and variety (*e.g.,* Fay Elberta peaches), the size of the fruit in the box (*e.g.,* 88 size), the net weight, and the maturity (either U.S. Mature (US MAT) or California Well Matured (CA WELL MAT)), on each container of nectarines or peaches.

As innovative containers enter the marketplace, especially those preferred by retailers, the configuration of display panels changes. This is true for both retail and consumer-size containers. As a result, handlers are forced to make adjustments in their container markings to accommodate the differences in display panels. Some containers, such as those intended for purchase by individual consumers, are smaller and have less display-panel surface area, and meeting all the minimum size labeling requirements is difficult. Some handlers requested a relaxation in the container labeling requirements with regard to the fruit maturity marking, and the committees agreed that a modification would be appropriate. This relaxation will eliminate the minimum lettering height in favor of a requirement that fruit maturity markings be clear and legible. Therefore, paragraphs (a)(3) of §§ 916.350 and 917.442 are so modified.

Maturity Requirements

Both orders provide (in §§ 916.52 and 917.41) authority to establish maturity requirements for nectarines and peaches, respectively. The minimum maturity level currently specified for nectarines and peaches is ''mature'' as defined in the standards. Additionally,

both orders' rules and regulations provide for a higher, ''well matured'' classification. For most varieties, ''well-matured'' fruit determinations are made using maturity guides (*e.g.,* color chips). These maturity guides are reviewed each year by the Shipping Point Inspection Service (SPI) to determine whether they need to be changed based on the most recent information available on the individual characteristics of each variety.

These maturity guides established under the handling regulations of the California tree fruit marketing orders have been codified in the Code of Federal Regulations as TABLE 1 in §§ 916.356 and 917.459, for nectarines and peaches, respectively.

The requirements in the 2000 handling regulation are the same as those that appeared in the 1999 handling regulation with a few exceptions. Those exceptions are explained in this rule.

Nectarines: Requirements for ''well-matured'' nectarines are specified in § 916.356 of the order's rules and regulations. While SPI made no recommendation with regard to changes to the NAC regarding maturity guides, the committee recommended removal of several varieties of nectarines from the maturity guides.

This rule revises TABLE 1 of paragraph (a)(1)(iv) of § 916.356 to remove 12 nectarine varieties which are no longer in production. The NAC routinely reviews the status of nectarine varieties listed in these maturity guides. The most recent review revealed that 12 of the nectarine varieties currently listed in the maturity guide have not been in production since the 1997 season. Typically, the NAC recommends removing a variety after non-production for three seasons, or if trees of that variety are known to have been pulled out, because a maturity guide for an obsolete variety is no longer needed. The varieties removed include the Apache, Arm King, Bob Grand, Flavor Grand, Flavortop I, Maybelle, Mike Grand, Pacific Star, Son Red, Summer Star, Sunfre, and Tasty Gold nectarine varieties.

Peaches: Section 917.459 of the order's rules and regulations specifies maturity requirements for fresh peaches being inspected and certified as being ''well matured.''

This rule revises TABLE 1 of paragraph (a)(1)(iv) of § 917.459 to add maturity guides for 2 peach varieties and revise the maturity guide for 1 variety. Specifically, SPI recommended adding the maturity guides for the Earli Rich peach variety to be regulated at the H maturity guide, and the Late Ito Red peach variety to be regulated at the L maturity guide. SPI also recommended a modification to the current maturity guide for the Autumn Rose peach variety, changing the maturity guide from the I to the H maturity guide.

This rule also corrects the reference to the Ambercrest peach variety listed in TABLE 1 of paragraph (a)(1)(iv). The correct name of the variety is ''Amber Crest.''

The PCC recommended these maturity requirements based on SPI's continuing review of individual maturity characteristics and identification of the appropriate maturity guide corresponding to the ''well-matured'' level of maturity for peach varieties in production.

TABLE 1 of paragraph (a)(1)(iv) of § 917.459 is also revised to remove 15 peach varieties which are no longer in production. The PCC routinely reviews the status of peach varieties listed in these maturity guides. The most-recent review revealed that 15 of the peach varieties currently listed in the maturity guide have not been in production since the 1997 season. Typically, the PCC recommends removing a variety after non-production for three seasons, or if trees of that variety are known to have been pulled out, because a maturity guide for an obsolete variety is no longer needed. The varieties removed include the August Sun, Autumn Crest, Belmont(Fairmont), Berenda Sun, Fayette, Golden Crest, Golden Lady, June Sun, Mary Anne, Parade, Pat's Pride, Prima Lady, Red Cal, Scarlet Lady, and Springold peach varieties.

Size Requirements

Both orders provide (in §§ 916.52 and 917.41) authority to establish size requirements. Size regulations cause producers to leave fruit on the tree longer. This increased growing time not only improves the size of the fruit, but also increases its maturity. In addition, increased size results in an increased number of packed boxes of nectarines or peaches per acre. Acceptable size fruit also provides greater consumer satisfaction and more repeat purchases, and, therefore, increases returns to producers and handlers. Varieties recommended for specific size regulation have been reviewed and such recommendations are based on the specific characteristics of each variety. The NAC and PCC conduct studies each season on the range of sizes reached by the regulated varieties and determine whether revisions in the size requirements are appropriate.

Nectarines: Section 916.356 of the order's rules and regulations specifies minimum size requirements for fresh nectarines in paragraphs (a)(2) through (a)(9). This rule revises § 916.356 to establish variety-specific minimum size requirements for 14 nectarine varieties that were produced in commercially-significant quantities of more than 10,000 packages for the first time during the 1999 season. This rule also removes the variety-specific minimum size requirements for 6 varieties of nectarines whose shipments fell below 5,000 packages during the 1999 season.

For example, one of the varieties recommended for addition to the variety-specific minimum size requirements is the Diamond Jewel nectarine variety. Studies of the size ranges attained by the Diamond Jewel variety revealed all but one box of that variety met minimum sizes 50, 60, 70, and 80 during the 1999 season. The one box reportedly met a minimum size 88. While the size distribution peaked on the size 70, 100 percent of the fruit sized at a minimum of size 88.

A review of other varieties with the same harvesting period indicated that Diamond Jewel was also comparable to those varieties in its size ranges for that time period. Discussions with handlers known to handle the variety confirmed this information regarding minimum size and harvesting period, as well. Thus, the recommendation to place the Diamond Jewel nectarine variety in the variety-specific size regulation at a size 88 is appropriate.

Historical variety data such as this provides the NAC with the information necessary to recommend the appropriate sizes at which to regulate various nectarine varieties. In addition, producers and handlers of the varieties affected are personally invited to comment when such size recommendations are deliberated. Producer and handler comments are also considered at both NAC and subcommittee meetings when such comments are received by the staff.

For reasons similar to those discussed in the preceding paragraph, the introductory text of paragraph (a)(4) of § 916.356 is revised to include the Diamond Jewel, Kay Sweet, and White Sun nectarine varieties; and the introductory text of paragraph (a)(6) in § 916.356 is revised to include the Arctic Blaze, Arctic Gold, Arctic Jay, Cole Red, Fire Sweet, Honey Blaze, Kay Bright, Prima Diamond XVIII, Regal Pearl, Ruby Sweet, and White September nectarine varieties.

This rule also revises the introductory text of paragraph (a)(4) of § 916.356 to remove 2 nectarine varieties from the variety-specific minimum size requirements specified in the section because less than 5,000 packages of each

of these varieties were produced during the 1999 season. Thus, the introductory text of paragraph (a)(4) is revised to remove the Early May and Prima Diamond VI nectarine varieties.

This rule also revises the introductory text of paragraph (a)(6) of § 916.356 to remove 4 nectarine varieties from the variety-specific minimum size requirements specified in the section because less than 5,000 packages of each of these varieties were produced during the 1999 season. Thus, the introductory text of paragraph (a)(6) is revised to remove the Flavortop, Flavortop I, How Red (Sunectnineteen) and the 491–48 nectarine varieties.

The Gran Sun nectarine variety had 1999 shipments of 2,939 packages, but was not recommended for removal from variety-specific size requirements because the variety is expected to increase in commercial significance during the 2000 season. Inclement weather, including the cool spring and frost damage, is considered to be a factor in the decreased production during the 1999 season.

Nectarine varieties removed from the nectarine variety-specific list become subject to the non-listed variety size requirements specified in paragraphs (a)(7), (a)(8), and (a)(9) of § 916.356.

The NAC recommended these changes in the minimum size requirements based on a continuing review of the sizing and maturity relationships for these nectarine varieties, and consumer acceptance levels for various sizes of fruit. This rule is designed to establish minimum size requirements for fresh nectarines consistent with expected crop and market conditions.

Peaches: Section 917.459 of the order's rules and regulations specifies minimum size requirements for fresh peaches in paragraphs (a)(2) through (a)(6), and paragraphs (b) and (c). This rule revises § 917.459 to establish variety-specific minimum size requirements for 16 peach varieties that were produced in commercially-significant quantities of more than 10,000 packages for the first time during the 1999 season. This rule also removes the variety-specific minimum size requirements for 4 varieties of peaches whose shipments fell below 5,000 packages during the 1999 season.

One of the varieties recommended for addition to the variety-specific size requirements is the Brittany Lane variety. Studies of the size ranges attained by the Brittany Lane variety revealed that while the size distribution peaked on size 50, all of the boxes of that variety met at least the size 80 requirement.

A review of other varieties of the same harvesting period indicated that Brittany Lane was also comparable to those varieties in its size ranges. Discussions with handlers known to handle the variety confirmed this information regarding minimum size and harvesting period, as well. Thus, the recommendation to place the Brittany Lane variety in the variety-specific size regulation at a size 80 is appropriate.

Historical variety data such as this provides the PCC with the information necessary to recommend the appropriate sizes at which to regulate various peach varieties. In addition, producers of the affected varieties are invited to comment when such size recommendations are deliberated. Producer and handler comments are also considered at both PCC and subcommittee meetings when such comments are received by the staff.

In § 917.459 of the order's rules and regulations, the introductory text of paragraph (a)(5) is revised to include the Brittany Lane, Snow Prince, Zee Diamond, 012–094, and 172LE White Peach (Crimson Snow/Sunny Snow) peach varieties; and the introductory text of paragraph (a)(6) is revised to include the Country Sweet, Earli Rich, Full Moon, Late September Snow, N117, Queen Lady, Red Sun, Sierra Gem, Snow Blaze, Sweet Kay, and Sweet September peach varieties.

This rule also revises § 917.459 to remove 4 peach varieties from the variety-specific size requirements specified in that section, because less than 5,000 packages of this variety were produced during the 1999 season. In § 917.459, the introductory text of paragraph (a)(5) is revised to remove the Golden Crest (Supechthree) peach variety and the introductory text of paragraph (a)(6) of § 917.459 is revised to remove the Snow Diamond, Sparkle, and 1–01–505 peach varieties.

The Super Rich peach variety had 1999 shipments of 3,941 packages, but was not recommended for removal from variety-specific size requirements because the variety is expected to increase in commercial significance during the 2000 season. Inclement weather, including the cool spring and frost damage, is considered to be a factor in the decreased production during the 1999 season.

Peach varieties removed from the variety-specific list become subject to the non-listed variety size requirements specified in paragraphs (b) and (c) of § 917.459.

The PCC recommended these changes in the minimum size requirements based on a continuing review of the sizing and maturity relationships for these peach varieties, and the consumer acceptance levels for various fruit sizes. This rule is designed to establish minimum size requirements for fresh peaches consistent with expected crop and market conditions.

This rule reflects the committees' and the Department's appraisal of the need to revise the handling requirements for California nectarines and peaches, as specified. The Department has determined that this rule will have a beneficial impact on producers, handlers, and consumers of California nectarines and peaches.

This rule establishes handling requirements for fresh California nectarines and peaches consistent with expected crop and market conditions, and will help ensure that all shipments of these fruits made each season will meet acceptable handling requirements established under each of these orders. This rule will also help the California nectarine and peach industries provide fruit desired by consumers. This rule is designed to establish and maintain orderly marketing conditions for these fruits in the interest of producers, handlers, and consumers.

Pursuant to requirements set forth in the Regulatory Flexibility Act (RFA), the Agricultural Marketing Service (AMS) has considered the economic impact of this action on small entities. Accordingly, AMS has prepared this initial regulatory flexibility analysis.

The purpose of the RFA is to fit regulatory actions to the scale of business subject to such actions in order that small businesses will not be unduly or disproportionately burdened. Marketing orders issued pursuant to the Act, and rules issued thereunder, are unique in that they are brought about through group action of essentially small entities acting on their own behalf. Thus, both statutes have small entity orientation and compatibility.

There are approximately 300 California nectarine and peach handlers subject to regulation under the orders covering nectarines and peaches grown in California, and about 1,800 producers of these fruits in California. Small agricultural service firms, which includes handlers, are defined as those whose annual receipts are less than $5,000,000. Small agricultural producers have been defined by the Small Business Administration [13 CFR 121.201] as those having annual receipts of less than $500,000. A majority of these handlers and producers may be classified as small entities.

The committees' staff have estimated that there are less than 20 handlers in the industry who could be defined as

other than small entities. If the average handler price received were $9.00 per box or box equivalent of nectarines or peaches, a handler would have to ship at least 555,000 boxes to have annual receipts of $5,000,000. Small handlers represent approximately 94 percent of the handlers within the industry. If the average producer price received were $6.00 per box or box equivalent for nectarines and $5.65 per box or box equivalent for peaches, producers would have to produce approximately 84,000 boxes or box equivalents of nectarines and approximately 89,000 boxes or box equivalents of peaches to have annual receipts of $500,000. Therefore, small producer entities are estimated to represent approximately 78 percent of the producers within the industry. For those reasons, a majority of the handler and producers may be classified as small entities.

Under §§ 916.52 and 917.41 of the orders, lot stamping, grade, size, maturity, and container and pack requirements are established for fresh shipments of California nectarines and peaches, respectively. Such requirements are in effect on a continuing basis. This rule revises current requirements to: (1) Revise the lot stamping requirements for the 2000 season only; (2) authorize shipments of ''CA Utility'' quality fruit to continue during the 2000 season; (3) eliminate the minimum size of maturity marking requirements for all containers; (4) provide a tolerance for the ''Peento'' or ''donut'' types of peaches for healed, non-serious, blossom-end growth cracks; and (5) revise varietal maturity, quality, and size requirements to reflect recent changes in growing conditions.

In §§ 916.115 and 917.150 of the orders' rules and regulations, respectively, handlers are required to stamp containers of nectarines and peaches with the Federal-State Inspection Service lot stamp number after inspection and prior to shipment. New, returnable containers, which do not support permanent markings, utilize printed cards which contain the lot stamp number, date codes, and other container marking requirements. The printed cards are easily inserted into tabs on the front or sides of the containers. The ease of portability of these cards creates problems for both the inspection service and the industries in tracking the containers. Cards on a pallet of inspected fruit could be easily moved to a pallet of uninspected fruit, thus permitting a handler to circumvent inspection requirements. The inspection service and the committees have recommended that each pallet of inspected nectarines and peaches be marked with a pallet tag containing the lot stamp number, in addition to the lot stamp number provided on the card on the containers.

The committees believe that this recommendation should be limited to the 2000 season only, since at least one manufacturer anticipates the availability of an area on the principle display panel where the container markings will adhere to the box, which will meet the needs of the industries, inspection service, and the manufacturer. However, the manufacturer believes that this change may not be available in time for the 2000 season. For that reason, the committees further recommended that the proposed modification of the lot stamping requirements be put into place for the 2000 season only.

In 1996, §§ 916.350 and 917.442 were revised to permit shipments of lower-quality nectarines and peaches, known as ''CA Utility,'' as an experiment for the 1996 season only. Such authorization was continued during the 1997, 1998, and 1999 seasons. This rule permits the continued use of ''CA Utility'' quality fruit for the 2000 season with a continued in-house statistical review to be conducted by the NAC and PCC. During the 1996 season, the Department authorized the shipment of nectarines and peaches which were of a lower quality than the minimum permitted for previous seasons. During 1996, there were 210,443 boxes of nectarines and 365,761 boxes of peaches packed as ''CA Utility,'' or 1.1 percent and 1.9 percent of fresh shipments, respectively. During 1997, there were 230,275 boxes of nectarines and 216,562 boxes of peaches packed as ''CA Utility,'' or 1.1 percent and 1.0 percent of fresh shipments, respectively. In 1998, there were 760,000 boxes of nectarines and 602,000 boxes of peaches packed as ''CA Utility,'' or 4.5 percent and 3.3 percent of fresh shipments, respectively. In 1999, there were 819,600 boxes of nectarines and 689,800 boxes of peaches packed as ''CA Utility,'' or 4.0 percent and 3.4 percent of fresh shipments, respectively.

Continued availability of ''CA Utility'' quality fruit is expected to have a positive impact on producers, handlers, and consumers by permitting more nectarines and peaches to be shipped into fresh market channels, without adversely impacting the market for higher quality fruit.

Sections 916.356 and 917.442 establish minimum maturity levels. This rule makes annual adjustments to the maturity requirements for several varieties of nectarines and peaches. Maturity requirements are based on maturity measurements generally using maturity guides (*e.g.,* color chips), as reviewed by SPI. Such maturity guides provide producers, handlers, and SPI with objective tools for measuring the maturity of different varieties of nectarines and peaches. Such maturity guides are reviewed annually by SPI to determine the appropriate guide for each nectarine and peach variety. These annual adjustments reflect changes in the maturity patterns of nectarines and peaches as experienced over the previous seasons' inspections. Adjustments in the guides ensure that fruit has met an acceptable level of maturity, thus ensuring consumer satisfaction while benefitting nectarine and peach producers and handlers.

Currently, in § 916.356 of the order's rules and regulations for nectarines and § 917.459 of the order's rules and regulations for peaches, minimum sizes for various varieties of nectarines and peaches are established. This rule makes adjustments to the minimum sizes authorized for various varieties of nectarines and peaches for the 2000 season. Minimum size regulations are put in place to allow fruit to stay on the tree for a greater length of time. This increased growing time not only improves maturity, but also improves fruit size. Increased fruit size increases the number of packed boxes per acre. Increased fruit size and maturity also provide greater consumer satisfaction and, therefore, more repeat purchases by consumers. Repeat purchases and consumer satisfaction benefit producers and handlers alike. Such adjustments to minimum sizes of nectarines and peaches are recommended each year by the NAC and PCC based upon historical data, and producer and handler information regarding sizes which the different varieties attain.

The recommendations with regard to maturity markings on containers, continuation of authority to ship nectarines and peaches which meet the ''CA Utility'' quality requirements, and an increased tolerance for Peento type of peaches, are relaxations. These regulations are intended to provide increased flexibility for handlers of nectarines and peaches.

The committees made recommendations regarding these revisions in handling requirements after considering all available information, including comments of persons at three subcommittee meetings. The Grade and Size Subcommittee met on November 9, 1999, the Management Services Committee met on November 17, 1999, and the Returnable Plastic Container Task Force met on November 23, 1999. At the meetings, the impact of and

alternatives to these recommendations were discussed.

At the Grade and Size Subcommittee, the members discussed recommendations of SPI with regard to maturity guides, and recommendations of staff with regard varietal sizing and grades. SPI recommended maturity guides for two varieties of peaches and also recommended a change in maturity guides for an established variety. SPI made no recommendations to add or change any maturity guides for nectarines. The staff made recommendations to remove varieties of nectarines and peaches from the maturity listings which are no longer in commercial production.

The staff also made recommendations to add nectarine and peach varieties to the variety specific size requirements, based upon internal studies of the sizing characteristics of those nectarines and peaches. These nectarine and peach varieties were packed in commercially-significant quantities of 10,000 packages or more during the 1999 season. Also, the staff made recommendations to remove nectarine and peach varieties from the variety specific sizing requirements, based upon information indicating that less than 5,000 packages of those varieties were packed in the 1999 season and that the shipments of those varieties are expected to continue to decline in commercial significance. The committees routinely review their regulations and add varieties of which more than 10,000 packages are packed in a season; or remove varieties of which less than 5,000 packages are packed in a season. The alternative to these requirements would be for the more popular varieties to be subject to the less precise general sizing regulations. This alternative was rejected since it would ultimately increase the amount of less acceptable fruit being marketed to consumers. Such a result would be contrary to the long-term interests of producers, handlers, and consumers.

At the Grade and Size Subcommittee meeting, a handler recommended eliminating the required minimum letter height for maturity markings for all types of containers. The handler noted that some boxes preferred by retailers have limited amounts of space on the display panels, especially consumer boxes. He suggested that the lettering height minimum for the maturity markings be eliminated in favor of clear and legible markings. Any alternatives, he noted, would fall short of the need to provide handlers the necessary maturity marking flexibility. He added that with all the required markings for variety, commodity, etc., very little room is left on the display panel and markings may nearly overlap. His recommendation and those of SPI and the staff were approved unanimously.

At the Returnable Plastic Container Task Force meeting, the participants discussed the most expedient method to ensure that lot stamp numbers and date codes could be affixed to containers of nectarines and peaches to allow such containers to be adequately tracked, which would meet the needs of the inspection service and the industries. The members also met with a manufacturer of one of the returnable boxes, who expressed a willingness to cooperate with the industries in finding a solution to the problem of the highly-portable cards on the containers.

Alternatives offered included leaving container marking requirements unchanged, eliminating lot stamp numbers as a required marking, and permitting shipments of nectarines and peaches in these containers without restrictions on the cards. By leaving container marking requirements unchanged, handlers would be precluded from providing nectarines and peaches in containers advocated by receiving retailers. Eliminating lot stamp numbers as a required marking is unacceptable to both the inspection service and the industry. Allowing returnable, plastic containers to be shipped with the highly portable cards is also unacceptable since the portability of the cards could enable a handler to evade inspection on a lot or lots of nectarines or peaches by moving the cards to uninspected containers, and could jeopardize the industries' ''trace back'' program. All of these alternatives were, therefore, rejected.

At the Management Services Committee meeting, the members reviewed all subcommittee recommendations available to them. The members of the Management Services Committee include the chairpersons and vice-chairpersons of the committees, who generally have many years experience working in the industries. They, too, discussed recommendations of subcommittees and were free to make alternative recommendations or revise recommendations to the committees, as they reviewed such recommendations.

Like committee meetings, subcommittee meetings are open to the public and comments are widely solicited.

This rule does not impose any additional reporting and recordkeeping requirements on either small or large handlers. As with all Federal marketing order programs, reports and forms are periodically reviewed to reduce information requirements and duplication by industry and public sector agencies.

The Department has not identified any relevant Federal rules that duplicate, overlap, or conflict with this rule. However, as previously stated, nectarines and peaches under the orders have to meet certain requirements set forth in the standards issued under the Agricultural Marketing Act of 1946 (7 U.S.C. 1621 *et seq.*). Standards issued under the Agricultural Marketing Act of 1946 are otherwise voluntary.

In addition, the committees' meetings were widely publicized throughout the nectarine and peach industries and all interested parties were invited to attend the meetings and participate in committee deliberations on all issues. These meetings are held annually during the last week of November or first week of December. Like all committee meetings, the November 30, 1999, meetings were public meetings and all entities, both large and small, were able to express views on these issues. The committees themselves are composed of producers. Finally, interested persons are invited to submit information on the regulatory and informational impacts of this action on small businesses.

A small business guide on complying with fruit, vegetable, and specialty crop marketing agreements and orders may be viewed at the following website: http://www.ams.usda.gov/fv/moab.html. Any questions about the compliance guide should be sent to Jay Guerber at the previously mentioned address in the **FOR FURTHER INFORMATION CONTACT** section.

After consideration of all relevant matters presented, the information and recommendations submitted by the committees, and other information, it is found that this interim final rule, as hereinafter set forth, will tend to effectuate the declared policy of the Act.

This rule invites comments on a change to the handling requirements currently prescribed under the marketing orders for California fresh nectarines and peaches. Any comments received will be considered prior to finalization of this rule.

Pursuant to 5 U.S.C. 553, it is also found and determined, upon good cause, that it is impracticable, unnecessary, and contrary to the public interest to give preliminary notice prior to putting this rule into effect, and that good cause exists for not postponing the effective date of this rule until 30 days after publication in the **Federal Register** because: (1) California nectarine and peach producers and handlers should be apprised of this rule as soon as possible,

since early shipments of these fruits are expected to begin about April 1; (2) this rule relaxes grade requirements for nectarines and peaches and size requirements for several nectarine and peach varieties; (3) this rule relaxes container marking requirements for all containers; and (4) the committees unanimously recommended these changes at a public meeting and interested persons had an opportunity to provide input; and (5) the rule provides a 60-day comment period, and any written comments received will be considered prior to any finalization of this interim final rule.

List of Subjects

7 CFR Part 916

Marketing agreements, Nectarines, Reporting and recordkeeping requirements.

7 CFR Part 917

Marketing agreements, Peaches, Pears, Reporting and recordkeeping requirements.

For the reasons set forth in the preamble, 7 CFR parts 916 and 917 are amended as follows:

1. The authority citation for 7 CFR parts 916 and 917 continues to read as follows:

Authority: 7 U.S.C. 601–674.

PART 916—NECTARINES GROWN IN CALIFORNIA

2. Section 916.115 is revised to read as follows:

§ 916.115 Lot stamping.

Except when loaded directly into railway cars, exempted under § 916.110, or for nectarines mailed directly to consumers in consumer packages, all exposed or outside containers of nectarines, and not less than 75 percent of the total containers on a pallet, shall be plainly stamped, prior to shipment, with a Federal-State Inspection Service lot stamp number, assigned by such Service, showing that such fruit has been USDA inspected in accordance with § 916.55: *Provided,* That for the period April 1 to October 31, 2000, pallets of returnable plastic containers shall have the lot stamp numbers affixed to each pallet with a USDA-approved pallet tag, in addition to the lot stamp numbers and other required information on cards on the individual containers.

3. Section 916.350 is amended by:

a. Revising paragraphs (a)(3) and

b. Revising paragraph (d) to read as follows:

§ 916.350 California nectarine container and pack regulation.

(a) * * *

(3) Each package or container of nectarines, except for consumer packages in master containers and consumer packages mailed directly to consumers, shall bear on one outside end clearly and legibly in plain sight and in plain letters the words ''U.S. Mature'' or ''US MAT'' if such nectarines are mature as defined in the United States Standards for Grades of Nectarines (7 CFR 51.3145 through 51.3160); or may instead bear on one outside end clearly and legibly in plain sight and in plain letters the words ''California Well Matured'' or ''CA WELL MAT'' if such nectarines are well matured as defined in § 916.356.

* * * * *

(d) During the period April 1 through October 31, 2000, each container or package when packed with nectarines meeting the ''CA Utility'' quality requirements, shall bear the words ''CA Utility,'' along with all other required container markings, in letters at least ⅜ inch in height on the visible display panel. Consumer bags or packages must also be clearly marked on the consumer bags or packages as ''CA Utility,'' along with other required markings, in letters at least ⅜ inch in height.

* * * * *

4. Section 916.356 is amended by:

a. Revising the introductory text of paragraph (a)(1);

b. Revising TABLE 1 of paragraph (a)(1)(iv); and,

c. Revising the introductory text of paragraphs (a)(3), (a)(4) and (a)(6), to read as follows:

§ 916.356 California nectarine grade and size regulation.

(a) * * *

(1) Any lot or package or container of any variety of nectarines unless such nectarines meet the requirements of U.S. No. 1 grade: *Provided,* That nectarines 2 inches in diameter or smaller, shall not have fairly light-colored, fairly smooth scars which exceed an aggregate area of a circle ⅜ inch in diameter, and nectarines larger than 2 inches in diameter shall not have fairly light-colored, fairly smooth scars which exceed an aggregate area of a circle ½ inch in diameter: *Provided further,* That an additional tolerance of 25 percent shall be permitted for fruit that is not well formed but not badly misshapen: *Provided further,* That all varieties of nectarines which fail to meet the U.S. No. 1 grade only on account of lack of blush or red color due to varietal characteristics shall be considered as meeting the requirements of this subpart: *Provided further,* That during the period April 1 through October 31, 2000, any handler may handle nectarines if such nectarines meet ''CA Utility'' quality requirements. The term ''CA Utility'' means that not more than 40 percent of the nectarines in any container meet or exceed the requirements of the U.S. No. 1 grade, except that when more than 30 percent of the nectarines in any container meet or exceed the requirements of U.S. No. 1 grade, the additional 10 percent shall have non-scoreable blemishes as determined when applying the U.S. Standards for Grades of Nectarines; and that such nectarines are mature and are:

* * * * *

(iv) * * *

TABLE 1

Column A variety	Column B maturity guide
Alshir Red	J
April Glo	H
August Glo	L
August Lion	J
August Red	J
Aurelio Grand	F
Autumn Delight	L
Autumn Grand	L
Big Jim	J
Diamond Jewel	L
Diamond Ray	L
Earliglo	I
Early Diamond	J
Early May	F
Early May Grand	H
Early Red Jim	J
Early Sungrand	H
Fairlane	L
Fantasia	J
Firebrite	H
Flamekist	L
Flaming Red	K
Flavortop	J
Grand Diamond	L
Independence	H
July Red	L
June Brite	I
Juneglo	H
Kay Diamond	L
King Jim	L
Kism Grand	J
Late Le Grand	L
Late Red Jim	J
May Diamond	I
May Fire	H
Mayglo	H
May Grand	H
May Jim	I
May Kist	H
May Lion	J
Mid Glo	L
Moon Grand	L
Niagara Grand	H
P-R Red	L
Red Diamond	L
Red Delight	I
Red Fred	J
Red Free	L
Red Glen	J

TABLE 1—Continued

Column A variety	Column B maturity guide
Red Glo	I
Red Grand	H
Red Jim	L
Red May	J
Rio Red	L
Rose Diamond	J
Royal Delight	F
Royal Giant	I
Royal Glo	I
Ruby Diamond	L
Ruby Grand	J
Ruby Sun	J
Scarlet Red	K
September Grand	L
September Red	L
Sheri Red	J
Sparkling June	L
Sparkling May	J
Sparkling Red	L
Spring Bright	L
Spring Diamond	L
Spring Red	H
Star Brite	J
Summer Beaut	H
Summer Blush	J
Summer Bright	J
Summer Diamond	L
Summer Fire	L
Summer Grand	L
Summer Lion	L
Summer Red	L
Sunburst	J
Sun Diamond	I
Sun Grand	G
Super Star	G
Tom Grand	L
Zee Glo	J
Zee Grand	I

Note: Consult with the Federal or Federal-State Inspection Service Supervisor for the maturity guides applicable to the varieties not listed above.

* * * * *

(3) Any package or container of Mayglo variety of nectarines on or after May 6 of each year, or Earliglo, Early Diamond, Johnny's Delight, May Jim, or May Kist variety nectarines unless:

* * * * *

(4) Any package or container of Arctic Glo, Arctic Rose, Arctic Star, Diamond Bright, Diamond Jewel, Juneglo, June Pearl, Kay Glo, Kay Sweet, May Diamond, May Grand, May Lion, Prima Diamond IV, Prima Diamond 13, Prince Jim, Red Delight, Red Glo, Rose Diamond, Royal Glo, Sparkling May, Star Brite, White Sun, or Zee Grand variety nectarines unless:

* * * * *

(6) Any package or container of Alshir Red, Alta Red, Arctic Blaze, Arctic Gold, Arctic Jay, Arctic Pride, Arctic Queen, Arctic Snow (White Jewel), Arctic Sweet, August Glo, August Lion, August Red, August Snow, Autumn Delight, Big Jim, Brite Pearl, Cole Red, Crystal Rose, Diamond Ray, Early Red Jim, Fairlane, Fantasia, Firebrite, Fire Pearl, Fire Sweet, Flame Glo, Flaming Red, Grand Diamond, Grand Pearl, Honey Blaze, Honey Kist, July Red, Kay Bright, Kay Diamond, King Jim, Late Red Jim, Mid Glo, Niagara Grand, P–R Red, Prima Diamond IX, Prima Diamond XVI, Prima Diamond XVIII, Prima Diamond XIX, Prima Diamond XXIV, Red Diamond, Red Glen, Red Jim, Regal Pearl, Rio Red, Royal Giant, Ruby Diamond, Ruby Pearl, Ruby Sweet, Scarlet Red, September Red, Sparkling June, Sparkling Red, Spring Bright, Spring Diamond, Spring Red, Summer Beaut, Summer Blush, Summer Bright, Summer Diamond, Summer Fire, Summer Grand, Summer Lion, Summer Red, Sunburst, Sun Diamond, Sunny Red, Super Star, Terra White, White September, or Zee Glo variety nectarines unless:

* * * * *

PART 917—FRESH PEARS AND PEACHES GROWN IN CALIFORNIA

5. Section 917.150 is revised to read as follows:

§ 917.150 Lot stamping.

Except when loaded directly into railway cars, exempted under § 917.143, or for peaches mailed directly to consumers in consumer packages, all exposed or outside containers of peaches, and not less than 75 percent of the total containers on a pallet, shall be plainly stamped, prior to shipment, with a Federal-State Inspection Service lot stamp number, assigned by such Service, showing that such fruit has been USDA inspected in accordance with § 917.45: *Provided:* That for the period April 1 to November 23, 2000, pallets of returnable plastic containers shall have the lot stamp numbers affixed to each pallet with a USDA-approved pallet tag, in addition to the lot stamp numbers and other required information on cards on the individual containers.

6. Section 917.442 is amended by:

a. Revising paragraphs (a)(3); and

b. Revising paragraph (d) to read as follows:

§ 917.442 California peach container and pack regulation.

(a) * * *

(3) Each package or container of peaches, except for consumer packages in master containers and consumer packages mailed directly to consumers, shall bear on one outside end clearly and legibly in plain sight and in plain letters the words ''U.S. Mature'' or ''US MAT'' if such peaches are mature as defined in the United States Standards for Grades of Peaches (7 CFR 51.1210 through 51.1223); or may instead bear on one outside end clearly and legibly in plain sight and in plain letters the words ''California Well Matured'' or ''CA WELL MAT'' if such peaches are well matured as defined in § 917.459.

* * * * *

(d) During the period April 1 through November 23, 2000, each container or package when packed with peaches meeting the ''CA Utility'' quality requirements, shall bear the words ''CA Utility,'' along with all other required container markings, in letters at least ⅜ inch in height on the visible display panel. Consumer bags or packages must also be clearly marked on the consumer bags or packages as ''CA Utility,'' along with other required markings, in letters at least ⅜ inch in height.

* * * * *

7. Section 917.459 is amended by:

a. Revising the introductory text of paragraph (a)(1);

b. Revising TABLE 1 of paragraph (a)(1)(iv); and

c. Revising the introductory text of paragraphs (a)(5) and (a)(6) to read as follows:

§ 917.459 California peach grade and size regulation.

(a) * * *

(1) Any lot or package or container of any variety of peaches unless such peaches meet the requirements of U.S. No. 1 grade: *Provided,* That an additional 25 percent tolerance shall be permitted for fruit with open sutures which are damaged, but not seriously damaged: *Provided Further,* That peaches of the Peento type shall be permitted a 10 percent tolerance for healed, non-serious, blossom-end growth cracks: *Provided further,* That during the period April 1 through November 23, 2000, any handler may handle peaches if such peaches meet ''CA Utility'' quality requirements. The term ''CA Utility'' means that not more than 40 percent of the peaches in any container meet or exceed the requirements of the U.S. No. 1 grade, except that when more than 30 percent of the peaches in any container meet or exceed the requirements of U.S. No. 1 grade, the additional 10 percent shall have non-scoreable blemishes as determined when applying the U.S. Standards for Grades of Peaches; and that such peaches are mature and are:

* * * * *

(iv) * * *

TABLE 1

Column A variety	Column B maturity guide
Amber Crest	G
Angelus	I
August Lady	L
Autumn Gem	I
Autumn Lady	H
Autumn Rose	H
Blum's Beauty	G
Cal Red	I
Carnival	I
Cassie	H
Coronet	E
Crimson Lady	J
Crown Princess	J
David Sun	I
Diamond Princess	J
Earli Rich	H
Early Delight	H
Early Elegant Lady	L
Early May Crest	H
Early O'Henry	I
Early Top	G
Elberta	B
Elegant Lady	L
Fairtime	G
Fancy Lady	J
Fay Elberta	C
Fire Red	I
First Lady	D
Flamecrest	I
Flavorcrest	G
Flavor Queen	H
Flavor Red	G
Franciscan	G
Goldcrest	H
Honey Red	G
John Henry	J
July Elberta	C
June Lady	G
June Pride	J
Kern Sun	H
Kingscrest	H
Kings Lady	I
Kings Red	I
Lacey	I
Lady Sue	L
Late Ito Red	L
May Crest	G
May Sun	I
Merrill Gem	G
Merrill Gemfree	G
O'Henry	I
Pacifica	G
Prima Gattie 8	L
Queencrest	G
Ray Crest	G
Red Dancer (Red Boy)	I
Redhaven	G
Red Lady	G
Redtop	G
Regina	G
Rich Lady	J
Rich May	H
Rich Mike	H
Rio Oso Gem	I
Royal Lady	J
Royal May	G
Ruby May	H
Ryan Sun	I
September Sun	I
Sierra Crest	H

TABLE 1—Continued

Column A variety	Column B maturity guide
Sierra Lady	I
Sparkle	I
Springcrest	G
Spring Lady	H
Sugar Lady	J
Summer Lady	L
Summerset	I
Suncrest	G
Sweet Scarlet	J
Topcrest	H
Tra Zee	J
Willie Red	G
Zee Lady	L

Note: Consult with the Federal or Federal-State Inspection Service Supervisor for the maturity guides applicable to the varieties not listed above.

* * * * *

(5) Any package or container of Babcock, Brittany Lane, Crimson Lady, Crown Princess, David Sun, Early May Crest, Flavorcrest, June Lady, Kern Sun, May Crest, May Sun, Merrill Gemfree, Pink Rose, Prima Peach IV, Queencrest, Ray Crest, Redtop, Rich May, Rich Mike, Snow Brite, Snow Prince, Springcrest, Spring Lady, Spring Snow, Sugar May, Sweet Scarlet, White Dream, Zee Diamond, 012–094, or 172LE White Peach (Crimson Snow/Sunny Snow) variety of peaches unless:

* * * * *

(6) Any package or container of Amber Crest, August Lady, Autumn Flame, Autumn Lady, Autumn Rose, Cal Red, Carnival, Cassie, Champagne, Country Sweet, Diamond Princess, Earli Rich, Early Elegant Lady, Early O'Henry, Elegant Lady, Fairtime, Fancy Lady, Fay Elberta, Flamecrest, Full Moon, John Henry, June Pride, Kaweah, Kings Lady, Lacey, Late Ito Red, Late September Snow, Madonna Sun, Morning Lord, N117, O'Henry, Prima Gattie, Prima Peach 13, Prima Peach 20, Prima Peach 23, Queen Lady, Red Dancer, Red Sun, Rich Lady, Royal Lady, Ryan Sun, Saturn (Donut), Scarlet Snow, September Snow, September Sun, Sierra Gem, Sierra Lady, Snow Blaze, Snow Giant, Snow King, Sprague Last Chance, Sugar Giant, Sugar Lady, Summer Lady, Summer Sweet, Summer Zee, Suncrest, Sweet Kay, Sweet September, Tra Zee, Vista, White Lady, Yukon King, or Zee Lady variety of peaches unless:

* * * * *

Dated: March 16, 2000.

Robert C. Keeney,

Deputy Administrator, Fruit and Vegetable Programs.

[FR Doc. 00–7086 Filed 3–21–00; 8:45 am]

BILLING CODE 3410–02–P

DEPARTMENT OF AGRICULTURE

Agricultural Marketing Service

7 CFR Part 989

[Docket No. FV00–989–1 FR]

Raisins Produced From Grapes Grown in California; Changes in Reporting Requirements

AGENCY: Agricultural Marketing Service, USDA.

ACTION: Final rule.

SUMMARY: This rule changes the reporting requirements specified under the administrative rules and regulations of the Federal marketing order for California raisins (order). The order regulates the handling of raisins produced from grapes grown in California and is administered locally by the Raisin Administrative Committee (Committee). This rule makes minor changes to two reports submitted by handlers regarding the receipt and disposition of non-California raisins (raisins produced from grapes grown outside California). These changes will reduce the reporting burden on handlers and provide the Committee with better information on non-California raisins.

EFFECTIVE DATE: August 1, 2000.

FOR FURTHER INFORMATION CONTACT: Maureen T. Pello, Marketing Specialist, California Marketing Field Office, Marketing Order Administration Branch, Fruit and Vegetable Programs, AMS, USDA, 2202 Monterey Street, suite 102B, Fresno, California 93721; telephone: (559) 487–5901, Fax: (559) 487–5906; or George Kelhart, Technical Advisor, Marketing Order Administration Branch, Fruit and Vegetable Programs, AMS, USDA, room 2525–S, P.O. Box 96456, Washington, DC 20090–6456; telephone: (202) 720–2491, or Fax: (202) 720–5698.

Small businesses may request information on complying with this regulation by contacting Jay Guerber, Marketing Order Administration Branch, Fruit and Vegetable Programs, AMS, USDA, P.O. Box 96456, room 2525–S, Washington, DC 20090–6456; telephone: (202) 720–2491, Fax: (202) 720–5698, or E-mail: Jay.Guerber@usda.gov.

SUPPLEMENTARY INFORMATION: This final rule is issued under Marketing Agreement and Order No. 989 (7 CFR part 989), both as amended, regulating the handling of raisins produced from grapes grown in California, hereinafter referred to as the ''order.'' The order is effective under the Agricultural Marketing Agreement Act of 1937, as amended (7 U.S.C. 601–674), hereinafter referred to as the ''Act.''

The Department of Agriculture (Department) is issuing this rule in conformance with Executive Order 12866.

This final rule has been reviewed under Executive Order 12988, Civil Justice Reform. This rule is not intended to have retroactive effect. This rule will not preempt any State or local laws, regulations, or policies, unless they present an irreconcilable conflict with this rule.

The Act provides that administrative proceedings must be exhausted before parties may file suit in court. Under section 608c(15)(A) of the Act, any handler subject to an order may file with the Secretary a petition stating that the order, any provision of the order, or any obligation imposed in connection with the order is not in accordance with law and request a modification of the order or to be exempted therefrom. A handler is afforded the opportunity for a hearing on the petition. After the hearing, the Secretary would rule on the petition. The Act provides that the district court of the United States in any district in which the handler is an inhabitant, or has his or her principal place of business, has jurisdiction in equity to review the Secretary's ruling on the petition, provided an action is filed not later than 20 days after the date of the entry of the ruling.

This final rule changes the reporting requirements specified under the order. This rule makes minor modifications to two reports submitted by handlers regarding the receipt and disposition of non-California raisins. The Committee collects these reports to track non-California raisins and help ensure that only California raisins are used in programs authorized under the order. These changes reduce the reporting burden on handlers and provide the Committee with better information on non-California raisins. This action was unanimously recommended by the Committee at a meeting on November 10, 1999.

Section 989.73(d) of the order provides authority for the Committee, with the approval of the Secretary, to request handlers to furnish to the Committee such other information as may be necessary to enable it to exercise its powers and perform its duties. Handlers are required to submit various reports regarding California raisins, including receipts, disposition, transfers to other handlers, and the like. This information is used by the Committee in making various program decisions such as those regarding volume regulation and the handler assessment rate for funding program activities.

In addition, § 989.173 requires handlers to report to the Committee their receipt and disposition of raisins produced from grapes grown outside the State of California. Authority to collect information on raisins other than those produced in California was added to the regulations in 1990 to help ensure that only California raisins are used in various programs operated under the order.

For example, an export program is authorized under the order to promote the sale of California raisins in export markets. This program is usually in effect when volume regulation is implemented under the order. When volume regulation is in effect, a certain percentage of the crop may be sold by handlers to any market (free tonnage) while the remaining percentage must be held by handlers in a reserve pool (or reserve) for the account of the Committee. Under the export program, handlers may receive raisins, at a reduced price, or cash back from the reserve pool to blend down the cost of the exported raisins, allowing handlers to be price competitive in export markets (prices in export markets are generally lower than the domestic market). The Committee wants to ensure that only California raisins are utilized in this program.

Paragraph (b)(7) of § 989.173 requires handlers to report receipts of non-California raisins. This information is reported on Form No. 500 and is due to the Committee on the eighth day of each month. Currently, handlers must categorize the net weight (pounds) of such raisins received as either natural condition (raw product) or packed (processed raisins) for the current month as well as a cumulative quantity from August 1, the beginning of the crop year.

The Committee recommended that such receipts not be categorized as natural condition or packed. This information is contained within other supporting documentation that handlers must also submit with their receipt report. Thus, the Committee would like to eliminate this duplication.

Paragraph (c)(3) of § 989.173 requires handlers to report the disposition of non-California raisins. This information is reported on Form No. 501 and is also due to the Committee on the eighth day of each month. Currently, handlers must report whether such raisins were disposed of in cartons, bags, or as bulk raisins. However, Committee staff has not found these categories useful in tracking non-California raisins. Thus, the Committee recommended eliminating this requirement.

In addition, the Committee recommended adding the requirement that handlers report the area of origin (country or state) of non-California raisins on the disposition report. Area of origin will help Committee staff match the disposition reports with the receipt reports, which already ask for area of origin. The Committee will thus be better able to track the inventory of non-California raisins.

These minor changes recommended by the Committee will reduce the reporting burden on handlers receiving and disposing of non-California raisins. Requiring handlers to report on their disposition form the origin of non-California raisins will allow the Committee to better track the inventory of such raisins. Accordingly, appropriate changes are made to paragraphs (b)(7) and (c)(3)(iv) of § 989.173.

Final Regulatory Flexibility Analysis and the Paperwork Reduction Act

Pursuant to requirements set forth in the Regulatory Flexibility Act (RFA), the Agricultural Marketing Service (AMS) has considered the economic impact of this action on small entities. Accordingly, AMS has prepared this final regulatory flexibility analysis.

The purpose of the RFA is to fit regulatory actions to the scale of business subject to such actions in order that small businesses will not be unduly or disproportionately burdened. Marketing orders issued pursuant to the Act, and rules issued thereunder, are unique in that they are brought about through group action of essentially small entities acting on their own behalf. Thus, both statutes have small entity orientation and compatibility.

There are approximately 20 handlers of California raisins who are subject to regulation under the order and approximately 4,500 raisin producers in the regulated area. Small agricultural service firms have been defined by the Small Business Administration (13 CFR 121.201) as those having annual receipts of less than $5,000,000, and small agricultural producers are defined as those having annual receipts of less than $500,000. Thirteen of the 20 handlers subject to regulation have annual sales estimated to be at least $5,000,000, and the remaining 7 handlers have sales less

than $5,000,000, excluding receipts from any other sources. No more than 7 handlers, and a majority of producers, of California raisins may be classified as small entities.

This final rule changes the reporting requirements specified in paragraphs (b) and (c) of § 989.173 regarding the receipt and disposition, respectively, of raisins produced from grapes grown outside the State of California. Handlers will no longer have to report to the Committee whether such raisins were received as natural condition or packed raisins, nor will handlers have to report whether such raisins were disposed of in cartons, bags or as bulk raisins. Handlers will have to report additional information, specifically, the area of origin (country or state) of such raisins on their disposition reports. Authority for these changes is provided in § 989.73(d) of the order.

Regarding the impact of this action on affected entities, this action will reduce, in the aggregate, the reporting and recordkeeping burden on handlers who receive and dispose of non-California raisins. The Committee estimates that 11 handlers receive and dispose of non-California raisins each year. It is estimated that it will take each handler about 4 minutes to complete each revised receipt report (1 minute less than that required for the current receipt report). The total annual burden for such receipt reports will be reduced from 11 hours to about 8.8 hours. Furthermore, it is estimated that it will take each handler about 5 minutes to complete each revised disposition report (the same as required for the current disposition report). The total annual burden for such disposition reports will remain at about 11 hours.

In accordance with the Paperwork Reduction Act of 1995 (44 U.S.C. Chapter 35), the information collection requirements contained in this final rule have been approved by the Office of Management and Budget. Existing requirements have been assigned OMB No. 0581–0178. As with other similar marketing order programs, reports and forms are periodically reviewed to reduce information requirements and duplication by industry and public sector agencies. Finally, the Department has not identified any relevant Federal rules that duplicate, overlap or conflict with this rule.

An alternative to this action would be to not make the recommended reporting changes. However, the Committee determined that it was best to proceed with its recommendation to reduce the reporting burden on handlers and obtain better information on tracking non-California raisins.

In addition, the Committee held an Administrative Issues Subcommittee meeting on November 9, 1999, where this issue was deliberated. This meeting and the Committee's meeting on November 10, 1999, were public meetings widely publicized throughout the raisin industry. All interested persons were invited to attend the meetings and participate in the industry's deliberations.

A proposed rule concerning this action was published in the **Federal Register** on December 10, 1999 (64 FR 69204). Copies of the rule were mailed by the Committee staff to all Committee members and alternates, the Raisin Bargaining Association, handlers, and dehydrators. In addition, the rule was made available through the Internet by the Office of the Federal Register. That rule provided for a 60-day comment period which ended February 8, 2000. No comments were received.

A small business guide on complying with fruit, vegetable, and specialty crop marketing agreements and orders may be viewed at the following web site: http://www.ams.usda.gov/fv/moab.html. Any questions about the compliance guide should be sent to Jay Guerber at the previously mentioned address in the **FOR FURTHER INFORMATION CONTACT** section.

After consideration of all relevant matter presented, including the information and recommendation submitted by the Committee and other available information, it is hereby found that this rule, as hereinafter set forth, will tend to effectuate the declared policy of the Act.

List of Subjects in 7 CFR Part 989

Grapes, Marketing agreements, Raisins, Reporting and recordkeeping requirements.

For the reasons set forth in the preamble, 7 CFR part 989 is amended as follows:

PART 989—RAISINS PRODUCED FROM GRAPES GROWN IN CALIFORNIA

1. The authority citation for 7 CFR part 989 continues to read as follows:

Authority: 7 U.S.C. 601–674.

2. In § 989.173, the second sentence in paragraph (b)(7) and paragraph (c)(3)(iv) are revised to read as follows:

§ 989.173 Reports.

* * * * *

(b) * * *

(7) * * * This report shall include: The varietal type of raisins received; the net weight (pounds) of raisins received for the current month as well as a cumulative quantity from August 1; and the state or country where the raisins were produced. * * *

(c) * * *

(3) * * *

(iv) The area of origin (state or country) of the raisins shipped.

* * * * *

Dated: March 16, 2000.

Robert C. Keeney,

Deputy Administrator, Fruit and Vegetable Programs.

[FR Doc. 00–7084 Filed 3–21–00; 8:45 am]

BILLING CODE 3410–02–P

DEPARTMENT OF AGRICULTURE

Animal and Plant Health Inspection Service

9 CFR Parts 74 and 93

[Docket No. 00–016–1]

Importation and Interstate Movement of Certain Land Tortoises

AGENCY: Animal and Plant Health Inspection Service, USDA.

ACTION: Interim rule and request for comments.

SUMMARY: We are prohibiting, until further notice, the importation into the United States of certain land tortoises. We are also prohibiting, until further notice, the interstate movement of these land tortoises. These actions are necessary to prevent the introduction and spread of exotic ticks known to be vectors of heartwater disease, an acute infectious disease of ruminants. These actions will provide protection against an outbreak of heartwater disease in domestic and wild populations of ruminants in the United States.

DATES: This interim rule is effective March 22, 2000. However, this rule does not apply to importations that are en route to the United States. We invite you to comment on this docket. We will consider all comments that we receive by May 22, 2000.

ADDRESSES: Please send your comment and three copies to: Docket No. 00–016–1, Regulatory Analysis and Development, PPD, APHIS, Suite 3C03, 4700 River Road, Unit 118, Riverdale, MD 20737–1238.

Please state that your comment refers to Docket No. 00–016–1.

You may read any comments that we receive on this docket in our reading room. The reading room is located in room 1141 of the USDA South Building, 14th Street and Independence Avenue, SW., Washington, DC. Normal reading

room hours are 8 a.m. to 4:30 p.m., Monday through Friday, except holidays. To be sure someone is there to help you, please call (202) 690–2817 before coming.

APHIS documents published in the **Federal Register**, and related information, including the names of organizations and individuals who have commented on APHIS dockets, are available on the Internet at http://www.aphis.usda.gov/ppd/rad/webrepor.html.

FOR FURTHER INFORMATION CONTACT: Dr. D. D. Wilson, Senior Staff Entomologist, Emergency Programs, VS, APHIS, 4700 River Road Unit 41, Riverdale, MD 20737–1231; (301) 734–8073.

SUPPLEMENTARY INFORMATION:

Background

The regulations in 9 CFR part 93 (referred to below as the animal import regulations) prohibit or restrict the importation of certain animals and birds into the United States to prevent the introduction of communicable diseases of livestock and poultry. The regulations in 9 CFR chapter I, subchapter C (referred to below as the interstate movement regulations), prohibit or restrict the interstate movement of certain animals and birds to prevent the spread of communicable diseases of livestock and poultry within the United States.

We are amending the animal import regulations to prohibit, until further notice, the importation of the following tortoises into the United States: All species and subspecies of leopard tortoise (*Geochelone pardalis*), African spurred tortoise (*Geochelone sulcata*), and Bell's hingeback tortoise (*Kinixys belliana*). Tortoises that are en route to the United States at the time of the publication of this interim rule will be allowed to be imported for humanitarian reasons. Refusing entry of tortoises already en route to the United States upon publication of the rule would be detrimental to the health of the tortoises and could be fatal.

In addition, we are amending the interstate movement regulations to prohibit, until further notice, the interstate movement of all species and subspecies of these land tortoises.

These actions are necessary because these tortoises, which are regularly imported into the United States and are common in the U.S. pet trade, have been found to harbor the tropical bont tick (*Amblyomma variegatum*), the African tortoise tick (*Amblyomma marmoreum*), and ticks of the species *Amblyomma sparsum.* All of these exotic ticks are known to be vectors of heartwater disease. Heartwater disease is an acute infectious disease of ruminants, including cattle, sheep, goats, white-tailed deer, and antelope. This disease has a 60 percent or greater mortality rate in livestock and a 90 percent or greater mortality rate in white-tailed deer.

In December 1999, it was reported that evidence indicating the presence of nucleic acid from the causative agent of heartwater disease or a related agent might have been present in *Amblyomma sparsum* collected from leopard tortoises imported into Florida. Subsequently, in February 2000, leopard tortoises from premises known to be infested with the African tortoise tick were moved interstate to noninfested premises. Though these incidents involve only leopard tortoises, we are also prohibiting the importation and interstate movement of African spurred tortoise and Bell's hingeback tortoise because interception records from 1995–1999 report that 90 percent of the tropical bont ticks, African tortoise ticks, and ticks of the species *Amblyomma sparsum* found on reptiles entering the United States occurred on these three species of land tortoise.

We are working to establish effective treatment and biosecurity protocols for tortoises and other reptiles. Effective treatment and biosecurity protocols will allow us to ensure that all tortoises and other reptiles entering the United States, as well as tortoises and other reptiles already in the United States, can be effectively treated for exotic ticks and that all exotic ticks can be eradicated from infested premises. When we have established such protocols, and when tortoises and other reptiles already in the United States have been effectively treated for exotic ticks and all exotic ticks eradicated from infested premises, the ban on importation of these tortoises from Africa, as well as the ban on interstate movement of these tortoises, will be lifted. Until that time, however, these actions will provide protection against an outbreak of heartwater disease in domestic and wild populations of ruminants in the United States.

Emergency Action

The Administrator of the Animal and Plant Health Inspection Service has determined that an emergency exists that warrants publication of this interim rule without prior opportunity for public comment. Immediate action is necessary to prevent an outbreak of heartwater disease in the United States.

Because prior notice and other public procedures with respect to this action are impracticable and contrary to the public interest under these conditions, we find good cause under 5 U.S.C. 553 to make this action effective less than 30 days after publication. We will consider comments that are received within 60 days of publication of this rule in the **Federal Register**. After the comment period closes, we will publish another document in the **Federal Register**. The document will include a discussion of any comments we receive and any amendments we are making to the rule as a result of the comments.

Executive Order 12866 and Regulatory Flexibility Act

This rule has been reviewed under Executive Order 12866. The rule has been determined to be not significant for the purposes of Executive Order 12866 and, therefore, has not been reviewed by the Office of Management and Budget.

This emergency situation makes timely compliance with section 604 of the Regulatory Flexibility Act (5 U.S.C. 601 *et seq.*) impracticable. We are currently assessing the potential economic effects of this action on small entities. Based on that assessment, we will either certify that the rule will not have a significant economic impact on a substantial number of small entities or publish a final regulatory flexibility analysis.

Executive Order 12372

This program/activity is listed in the Catalog of Federal Domestic Assistance under No. 10.025 and is subject to Executive Order 12372, which requires intergovernmental consultation with State and local officials. (See 7 CFR part 3015, subpart V.)

Executive Order 12988

This rule has been reviewed under Executive Order 12988, Civil Justice Reform.

This rule: (1) Preempts all State and local laws and regulations that are inconsistent with this rule; (2) Has no retroactive effect; and (3) Does not require administrative proceedings before parties may file suit in court challenging this rule.

Paperwork Reduction Act

This interim rule contains no information collection or recordkeeping requirements under the Paperwork Reduction Act of 1995 (44 U.S.C. 3501 *et seq.*).

List of Subjects

9 CFR Part 74

Animal diseases, Livestock, Quarantine, Reporting and recordkeeping requirements, Transportation.

9 CFR Part 93

Animal diseases, Imports, Livestock, Poultry and poultry products, Quarantine, Reporting and recordkeeping requirements.

Accordingly, we are amending 9 CFR chapter I as follows:

1. In subchapter C, a new part 74 is added to read as follows:

PART 74—PROHIBITION OF INTERSTATE MOVEMENT OF LAND TORTOISES

Sec.
74.1 General prohibition.

Authority: 21 U.S.C. 111–113, 114a, 115, 117, 120, 122–126, 134b, 134f; 7 CFR 2.22, 2.80, and 371.2(d).

§ 74.1 General prohibition.

The interstate movement of leopard tortoise (*Geochelone pardalis*), African spurred tortoise (*Geochelone sulcata*), and Bell's hingeback tortoise (*Kinixys belliana*) is prohibited.

PART 93—IMPORTATION OF CERTAIN ANIMALS, BIRDS, AND POULTRY, AND CERTAIN ANIMAL, BIRD, AND POULTRY PRODUCTS; REQUIREMENTS FOR MEANS OF CONVEYANCE AND SHIPPING CONTAINERS

2. The authority citation for part 93 continues to read as follows:

Authority: 7 U.S.C. 1622; 19 U.S.C. 1306; 21 U.S.C. 102–105, 111, 114a, 134a, 134b, 134c, 134d, 134f, 136, and 136a; 31 U.S.C. 9701; 7 CFR 2.22, 2.80, and 371.2(d).

3. In § 93.701, a new paragraph (c) is added to read as follows:

§ 93.701 Prohibitions.

* * * * *

(c) No person may import leopard tortoise (*Geochelone pardalis*), African spurred tortoise (*Geochelone sulcata*), or Bell's hingeback tortoise (*Kinixys belliana*) into the United States.

Done in Washington, DC, this 16th day of March 2000.

Bobby R. Acord,

Acting Administrator, Animal and Plant Health Inspection Service.

[FR Doc. 00–7014 Filed 3–21–00; 8:45 am]

BILLING CODE 3410–34–U

DEPARTMENT OF ENERGY

10 CFR Part 820

Procedural Rules for DOE Nuclear Activities; General Statement of Enforcement Policy

AGENCY: Department of Energy.

ACTION: Final rule; amendment of enforcement policy statement and confirmation of interim rule.

SUMMARY: The Department of Energy (DOE) is amending its General Statement of Enforcement Policy, which is in an Appendix to the Procedural Rules for DOE Nuclear Activities, to state that DOE may use information collected by DOE and the Department of Labor (DOL) concerning whistleblower proceedings as a basis for enforcement actions and civil penalties under the Procedural Rules for DOE Nuclear Activities if the retaliation against DOE contractor employees relates to matters of nuclear safety in connection with a DOE nuclear activity. DOE also confirms the interim amendments to the enforcement policy statement published October 8, 1997.

DATES: This amended Policy and confirmation of the interim rule published October 8, 1997 as final takes effect on April 21, 2000.

FOR FURTHER INFORMATION CONTACT:

Keith Christopher, U. S. Department of Energy, Office of Investigation and Enforcement, EH–10, 19901 Germantown Road, Germantown, MD 20874 (301) 903–0100.

Ben McRae, U. S. Department of Energy, Office of General Counsel, GC–52, 1000 Independence Avenue, SW, Washington, DC 20585 (202) 586–6975.

SUPPLEMENTARY INFORMATION:

I. Background
II. Basis for Amendment of Enforcement Policy
III. Procedural Requirements
A. Review Under Executive Order 12866
B. Review Under the Regulatory Flexibility Act
C. Review Under the Paperwork Reduction Act
D. Review Under the National Environmental Policy Act
E. Review Under Executive Order 13132
F. Review Under Executive Order 12988
G. Review Under the Unfunded Mandates Reform Act of 1995
H. Congressional Notification

I. Background

The Department of Energy (DOE) has adopted procedural rules in 10 CFR part 820 (Part 820) to provide for the enforcement of violations of DOE Nuclear Safety Requirements for which civil and criminal penalties can be imposed under the Price-Anderson Amendments Act of 1988 (Pub. L. 100–408, August 20, 1988) (PAAA). 56 FR 64290 (proposed Dec. 9, 1991), 58 FR 43680 (final Aug. 17, 1993). Appended to the rule is a General Statement of Enforcement Policy (Enforcement Policy). The Enforcement Policy sets forth the general framework through which DOE would seek to enforce compliance with DOE's nuclear safety rules, regulations and orders by a DOE contractor, subcontractor, or a supplier (hereinafter referred to collectively as ''contractor''). Following that promulgation, DOE amended the Enforcement Policy with an opportunity for comment. 62 FR 52479 (Oct. 8, 1997). No comments were received and the amendments are made final today.

DOE's whistleblower regulations, 10 CFR part 708 (Department of Energy Contractor Employee Protection Program) (Part 708), establish requirements prohibiting retaliation against DOE contractor employees who have undertaken certain whistleblower actions. DOE's Office of Hearings and Appeals (OHA) has responsibility for resolution of whistleblower complaints under Part 708. The regulations provide criteria and procedures to protect employees of DOE contractors who believe they have suffered retaliation for disclosing information concerning danger to public health or safety, substantial violations of law, fraud or gross mismanagement; for participating in congressional proceedings; or for refusing to participate in dangerous activities. If an act of retaliation has occurred, OHA may order reinstatement, transfer preference, back pay, reimbursements of costs and expenses, or other remedies necessary to abate the violation. 10 CFR part 708, 57 FR 7533 (final March 3,1992), 61 FR 55230 (notice Oct. 25, 1996), 64 FR 12862 (interim final March 15, 1999), 64 FR 37396 (interim final rule and amendment July 12, 1999), 65 FR 6314 (final Feb. 9, 2000), 65 FR 9201 (correction Feb. 24, 2000).

In late 1992, Congress amended the Energy Reorganization Act, 42 U.S.C. 5801, *et seq.* (ERA), to prohibit any employer, including a DOE contractor indemnified under section 170.d. of the Atomic Energy Act of 1954, as amended, 42 U.S.C. 2011, *et seq.* (AEA), from discriminating against any employee with respect to his or her compensation, terms, conditions or privileges of employment because the employee assisted or participated, or is about to assist or participate in any manner, in any action to carry out the purposes of the ERA or the AEA. 42 U.S.C. 5851 (ERA Sec. 211). The Department of Labor (DOL) has the responsibility under Sec. 211 to investigate employee complaints of discrimination and may, after an investigation and opportunity for hearing, order a violator to take affirmative action to abate the violation, reinstate the complainant to his or her

former position with back pay, and award compensatory damages, including attorney fees. 29 CFR part 24, 59 FR 12506 (proposed March 16, 1994), 63 FR 6614 (final Feb. 9, 1998).

Before Part 820 was finalized and before § 211 of the ERA was enacted, DOE published a Notice of Clarification (Clarification) of proposed Part 820 to clarify the intended scope of the proposed definition of ''DOE Nuclear Safety Requirements'' as a basis for civil penalties, and to clarify the relationship between proposed Part 820 and Part 708. 57 FR 20796 (May 15, 1992). This Clarification established that the regulations prohibiting contractor retaliation in Part 708 could constitute DOE Nuclear Safety Requirements if the retaliation resulted from the employee's involvement in matters of nuclear safety in connection with a DOE nuclear activity. Such retaliation against DOE contractor employees would, therefore, be subject to the investigatory and adjudicatory procedures of Part 820, and could lead to the imposition of civil penalties under Part 820.

II. Basis for Amendment of Enforcement Policy

DOE's 1992 Clarification indicated that the provisions of the DOE whistleblower rule in Part 708 could constitute DOE Nuclear Safety Requirements. DOE imposed an affirmative duty on DOE contractors to protect the public, workers, and the environment in matters of nuclear safety relating to DOE nuclear activities by subjecting the contractors to enforcement for retaliation against contractor employees. In particular, if DOE found that a contractor retaliated in response to a worker raising or disclosing legitimate nuclear safety-related information or concerns, the Clarification stated that a violation of Part 820 could exist. 57 FR at 20797, 58 FR at 43681.

Any deterrent to the flow of that information can potentially constitute a violation of DOE Nuclear Safety Requirements that are imposed through the DOE whistleblower protection provisions. This is consistent with the NRC enforcement policy, which subjects licensees to possible civil penalties if they discriminate against employees raising safety issues or otherwise engaging in protected whistleblower activities under the ERA or the AEA. See, *e.g.,* 10 CFR 50.7, 58 FR 52410 (Oct. 8, 1993), 60 FR 24551 (amended May 9, 1995), 61 FR 6765 (amended Feb. 22, 1996).

When DOE put its contractors on notice in 1992 that a violation of the whistleblower provisions of Part 708 could result in civil penalties, the DOL whistleblower proceedings were not an alternative to Part 708. Accordingly, the Clarification did not indicate that information collected by DOL in a whistleblower proceeding could be used as the basis for issuance of a Preliminary Notice of Violation (PNOV) by DOE. Based on experience with DOL proceedings since the Clarification, DOE believes that DOL proceedings serve the same function as a Part 708 proceeding in determining whether a contractor has retaliated against an employee.

DOE is therefore amending the General Statement of Enforcement Policy appended to Part 820 to provide that the Director of the Office of Investigation and Enforcement (Director) may use information that DOL collects in a § 211 proceeding as a basis for enforcement action under Part 820. Specifically, the Director may use this information as the basis for initiating enforcement action by issuing a PNOV. In determining whether to initiate action under Part 820 with respect to an alleged retaliation, the Director would review the report of the investigation, the adjudicative record, and any other relevant material associated with the proceeding to determine if an adequate basis exists to issue a PNOV.

The Director may also use DOL information to support the determination that a contractor has violated or is continuing to violate the nuclear safety requirements against contractor retaliation and to issue civil penalties or other appropriate remedy in a Final Notice of Violation (FNOV). 10 CFR 820.24–820.25.

The Director will have discretion to give appropriate weight to information collected in DOL and in OHA investigations and proceedings. In deciding whether additional investigation or information is needed, the Director will consider the extent to which the facts in the proceedings have been adjudicated as well as any information presented by the contractor.

DOE has a policy of encouraging its contractors to cooperate in resolving whistleblower complaints raised by contractor employees. Accordingly, in deciding whether to initiate an enforcement action, the Director will take into account the extent to which a contractor cooperated in a Part 708 or § 211 proceeding, and, in particular, whether the contractor resolved the matter promptly without the need for an adjudication proceeding.

In considering whether to initiate an enforcement action and, if so, what remedy is appropriate, the Director will also consider the egregiousness of the particular case including the level of management involved in the alleged retaliation and the specificity of the acts of retaliation.

Normally, the Director will await the completion of the DOL or OHA investigation and related deliberative processes before deciding whether to take any enforcement action in order to avoid duplication of investigative effort. A Part 708 or Sec. 211 proceeding would be considered completed when there is either a final decision or a settlement of the retaliation complaint, or no additional administrative action is available. In egregious cases outlined in the Clarification and included in paragraph 7 of Section XIII, DOE may initiate an investigation and bring an enforcement action before the other proceedings are completed.

It should be noted, however, that any enforcement action in which the Director cites a violation of the whistleblower regulations is separate and distinct from violations arising from the substantive nuclear safety rules in 10 CFR part 830 (nuclear safety management), 10 CFR part 835 (occupational radiation protection), and 10 CFR 820.11 (information accuracy requirements). The Director may begin investigations of noncompliances of these nuclear safety rules at any time based on the underlying nuclear safety concerns raised by the employee regardless of the status of any related whistleblower retaliation proceedings.

III. Procedural Requirements

A. Review Under Executive Order 12866

Today's regulatory action has been determined not to be ''a significant regulatory action'' under Executive Order 12866, ''Regulatory Planning and Review,'' (58 FR 51735, Oct. 4, 1993). Accordingly, this action was not subject to review under that Executive Order by the Office of Information and Regulatory Affairs of the Office of Management and Budget (OMB).

B. Review Under the Regulatory Flexibility Act

The Regulatory Flexibility Act of 1980 (5 U.S.C. 601 *et seq.*) requires preparation of an initial regulatory flexibility analysis for any rule that by law must be proposed for public comment, unless the agency certifies that the rule will not have a ''significant economic impact on a substantial number of small entities.'' DOE is not required by the Administrative Procedures Act (5 U.S.C. 553) or any other law to propose this policy statement for public comment. Accordingly, the Regulatory Flexibility Act requirements do not apply to this

rulemaking, and no regulatory flexibility analysis has been prepared.

C. Review Under the Paperwork Reduction Act

No additional information or record keeping requirements are imposed by this policy statement. Accordingly, no OMB clearance is required under the Paperwork Reduction Act (44 U.S.C. 3501 *et seq.*).

D. Review Under the National Environmental Policy Act

The Department determined that this policy statement is not a major federal action significantly affecting the quality of the human environment within the meaning of the National Environmental Policy Act (NEPA), 42 U.S.C. 4321 *et seq.*, and does not require preparation of an environmental impact statement or an environmental assessment. This policy statement amendment clarifies that DOE may use information generated in certain whistleblower proceedings involving DOE contractor employees as the basis for enforcement under procedures applicable to DOE Nuclear Safety Requirements. This action is covered under the Categorical Exclusion found at paragraph A.5. of Appendix A to Subpart D, 10 CFR part 1021, which applies to rulemakings that do not change the environmental effect of the rule being amended.

E. Review Under Executive Order 13132

Executive Order 13132 (64 FR 43255, Aug. 10, 1999) requires agencies to develop an accountable process to ensure meaningful and timely input by State and local officials in the development of regulatory policies that have federalism implications. ''Policies that have federalism implications'' is defined in the Executive Order to include regulations that have substantial direct effects on the States, on the relationship between the national government and the States, or on the distribution of power and responsibilities among the various levels of government. This amendment of DOE's enforcement policy would not have a substantial direct effect on the States, on the relationship between the national government and the States, or on the distribution of power and responsibilities among the various levels of government. No further action is required by Executive Order 13132.

F. Review Under Executive Order 12988

With respect to the review of existing regulations and the promulgation of new regulations, section 3(a) of Executive Order 12988, ''Civil Justice Reform,'' (61 FR 4729, February 7, 1996), imposes on Federal agencies the general duty to adhere to the following requirements: (1) Eliminate drafting errors and ambiguity; (2) write regulations to minimize litigation; and (3) provide a clear legal standard for affected conduct rather than a general standard and promote simplification and burden reduction. With regard to the review required by section 3(a), section 3(b) of Executive Order 12988 specifically requires that Executive agencies make every reasonable effort to ensure that the regulation: (1) Clearly specifies the preemptive effect, if any; (2) clearly specifies any effect on existing Federal law or regulation; (3) provides a clear legal standard for affected conduct while promoting simplification and burden reduction; (4) specifies the retroactive effect, if any; (5) adequately defines key terms; and (6) addresses other important issues affecting clarity and general draftsmanship under any guidelines issued by the Attorney General. Section 3(c) of Executive Order 12988 requires Executive agencies to review regulations in light of applicable standards in section 3(a) and section 3(b) to determine whether they are met or it is unreasonable to meet one or more of them. DOE has completed the required review and determined that, to the extent permitted by law, this policy statement meets the relevant standards of Executive Order 12988.

G. Review Under the Unfunded Mandates Reform Act of 1995

Title II of the Unfunded Mandates Reform Act of 1995 (Pub. L. 104–4) requires each federal agency to prepare a written assessment of the effects of any federal mandate in a proposed or final agency rule that may result in the expenditure by State, local, and tribal governments, in the aggregate, or by the private sector, of $100 million in any one year. The Act also requires a federal agency to develop an effective process to permit timely input by elected officers of State, local, and tribal governments on a proposed ''significant intergovernmental mandate,'' and requires an agency plan for giving notice and opportunity to timely input to potentially affected small governments before establishing any requirements that might significantly or uniquely affect small governments. DOE's intergovernmental consultation process under the Unfunded Mandates Reform Act of 1995 is described in a statement of policy published by the Office of General Counsel on March 18, 1997 (62 FR 12820). The policy statement amendment published today does not contain any federal mandate, so these requirements do not apply.

H. Congressional Notification

As required by 5 U.S.C. 801, DOE will report to Congress promulgation of this policy statement amendment prior to its effective date. The report will state that it has been determined that the amendment is not a ''major rule'' as defined by 5 U.S.C. 804(2).

List of Subjects 10 CFR Part 820

Government contracts, Nuclear safety, Whistleblowing

Issued in Washington, DC, on March 14, 2000.

David Michaels,

Assistant Secretary for Environment, Safety and Health.

For the reason set forth in the preamble, Part 820 of Title 10 of the Code of Federal Regulations is amended as set forth below:

PART 820—PROCEDURAL RULES FOR DOE NUCLEAR ACTIVITIES

1. The authority citation for Part 820 continues to read as follows:

Authority: 42 U.S.C. 2201, 2282(a), 7191; 28 U.S.C. 2461 note.

2. Appendix A to Part 820 as amended on October 8, 1997 (62 FR 52479), is adopted as final without change.

3. Appendix A to Part 820 is amended by adding a new Section XIII to read as follows:

Appendix A to Part 820—General Statement of Enforcement Policy

* * * * *

XIII. Whistleblower Enforcement Policy

a. DOE contractors may not retaliate against any employee because the employee has disclosed information, participated in activities or refused to participate in activities listed in 10 CFR 708.5 (a)–(c) as provided by 10 CFR 708.43. DOE contractor employees may seek remedial relief for allegations of retaliation from the DOE Office of Hearings and Appeals (OHA) under 10 CFR part 708 (Part 708) or from the Department of Labor (DOL) under sec. 211 of the Energy Reorganization Act (sec. 211), implemented in 29 CFR part 24.

b. An act of retaliation by a DOE contractor, proscribed under 10 CFR 708.43, that results from a DOE contractor employee's involvement in an activity listed in 10 CFR 708.5(a)–(c) concerning nuclear safety in connection with a DOE nuclear activity, may constitute a violation of a DOE Nuclear Safety Requirement under 10 CFR part 820 (Part 820). The retaliation may be subject to the investigatory and adjudicatory procedures of both Part 820 and Part 708. The same facts that support remedial relief to employees under Part 708 may be used by the Director of the Office of Investigation and

Enforcement (Director) to support issuance of a Preliminary Notice of Violation (PNOV), a Final Notice of Violation (FNOV), and assessment of civil penalties. 10 CFR 820.24–820.25.

c. When an employee files a complaint with DOL under sec. 211 and DOL collects information relating to allegations of DOE contractor retaliation against a contractor employee for actions taken concerning nuclear safety, the Director may use this information as a basis for initiating enforcement action by issuing a PNOV. 10 CFR 820.24. DOE may consider information collected in the DOL proceedings to determine whether the retaliation may be related to a contractor employee's action concerning a DOE nuclear activity.

d. The Director may also use DOL information to support the determination that a contractor has violated or is continuing to violate the nuclear safety requirements against contractor retaliation and to issue civil penalties or other appropriate remedy in a FNOV. 10 CFR 820.25.

e. The Director will have discretion to give appropriate weight to information collected in DOL and OHA investigations and proceedings. In deciding whether additional investigation or information is needed, the Director will consider the extent to which the facts in the proceedings have been adjudicated as well as any information presented by the contractor. In general, the Director may initiate an enforcement action without additional investigation or information.

f. Normally, the Director will await the completion of a Part 708 proceeding before OHA or a sec. 211 proceeding at DOL before deciding whether to take any action, including an investigation under Part 820 with respect to alleged retaliation. A Part 708 or sec. 211 proceeding would be considered completed when there is either a final decision or a settlement of the retaliation complaint, or no additional administrative action is available.

g. DOE encourages its contractors to cooperate in resolving whistleblower complaints raised by contractor employees in a prompt and equitable manner. Accordingly, in deciding whether to initiate an enforcement action, the Director will take into account the extent to which a contractor cooperated in a Part 708 or sec. 211 proceeding, and, in particular, whether the contractor resolved the matter promptly without the need for an adjudication hearing.

h. In considering whether to initiate an enforcement action and, if so, what remedy is appropriate, the Director will also consider the egregiousness of the particular case including the level of management involved in the alleged retaliation and the specificity of the acts of retaliation.

i. In egregious cases, the Director has the discretion to proceed with an enforcement action, including an investigation with respect to alleged retaliation irrespective of the completion status of the Part 708 or sec. 211 proceeding. Egregious cases would include: (1) Cases involving credible allegations for willful or intentional violations of DOE rules, regulations, orders or Federal statutes which, if proven, would warrant criminal referrals to the U.S. Department of Justice for prosecutorial review; and (2) cases where an alleged retaliation suggests widespread, high-level managerial involvement and raises significant public health and safety concerns.

j. When the Director undertakes an investigation of an allegation of DOE contractor retaliation against an employee under Part 820, the Director will apprise persons interviewed and interested parties that the investigative activity is being taken pursuant to the nuclear safety procedures of Part 820 and not pursuant to the procedures of Part 708.

k. At any time, the Director may begin an investigation of a noncompliance of the substantive nuclear safety rules based on the underlying nuclear safety concerns raised by the employee regardless of the status of completion of any related whistleblower retaliation proceedings. The nuclear safety rules include: 10 CFR part 830 (nuclear safety management); 10 CFR part 835 (occupational radiation protection); and 10 CFR part 820.11 (information accuracy requirements).

[FR Doc. 00–6916 Filed 3–21–00; 8:45 am]

BILLING CODE 6450–01–P

FEDERAL ELECTION COMMISSION

11 CFR Part 108

[Notice 2000–4]

Filing Copies of Campaign Finance Reports and Statements With State Officers

AGENCY: Federal Election Commission.

ACTION: Final rules; transmittal of regulations to Congress.

SUMMARY: The Federal Election Commission is revising its regulations that govern filing of campaign finance reports with State officers and the duties of State officers concerning the reports. The revisions implement amendments to the Federal Election Campaign Act that exempt States meeting certain criteria from these requirements.

DATES: Further action, including the announcement of an effective date, will be taken after these regulations have been before Congress for 30 legislative days pursuant to 2 U.S.C. 438(d). A document announcing the effective date will be published in the **Federal Register**.

FOR FURTHER INFORMATION CONTACT: Ms. Rosemary C. Smith, Assistant General Counsel, or Ms. Rita A. Reimer, Attorney, 999 E Street, N.W., Washington, D.C. 20463, (202) 694–1650 or toll free (800) 424–9530.

SUPPLEMENTARY INFORMATION: The Federal Election Campaign Act (''FECA'' or the ''Act''), 2 U.S.C. 431 *et seq.*, at 2 U.S.C. 439(a) requires all persons who file campaign finance reports and statements under the Act to file copies of these documents with the Secretary of State, or the officer charged by state law with maintaining state election campaign reports, in each State where contributions were received or expenditures made on behalf of a Federal candidate or candidates appearing on that State's ballot. Under 2 U.S.C. 439(b), these officers must receive and maintain the documents for two years after their date of receipt, and must make them available for public inspection and copying during regular business hours.

In 1995, Congress enacted 2 U.S.C. 439(c), which exempts from these receipt and maintenance requirements any State that the Commission determines to have in place a system that permits electronic access to and duplication of reports and statements that are filed with the Commission. Pub. L. 104–79, 109 Stat. 791, section 2. If the Commission does not make this determination, the State remains obligated to maintain copies of the statements and disclosure reports that have been filed with it. These new rules revise the Commission's regulations at 11 CFR Part 108 to reflect this statutory change.

In September 1997, the Commission published a Notice of Proposed Rulemaking (''NPRM'') that proposed a number of revisions to the Commission's recordkeeping and reporting requirements, including those addressed in this document, and corresponding changes to the relevant disclosure forms. 62 FR 50708 (Sept. 26, 1997). The Commission received three written comments in response to the NPRM, two of which addressed the state filing issues: one from the Secretary of State of South Dakota, and one from David S. Addington, Esq. In addition, the Internal Revenue Service submitted a comment in which it said that the proposed rules were not inconsistent with their regulations or the Internal Revenue Code. On February 11, 1998, the Commission held a public hearing on the NPRM at which one witness testified but did not discuss waivers of state filing requirements. One further comment was submitted in response to the announcement of the hearing.

The Commission has decided to proceed separately with this portion of the rulemaking, both because these issues are more straightforward than those addressed in other parts of the NPRM, and because the Commission is in the process of granting waivers pursuant to section 439(c) to States that meet certain requirements.

Section 438(d) of Title 2, United States Code, requires that any rules or regulations prescribed by the Commission to carry out the provisions of Title 2 of the United States Code be transmitted to the Speaker of the House of Representatives and the President of the Senate 30 legislative days before they are finally promulgated. These regulations were transmitted to Congress on March 17, 2000.

Explanation and Justification

Part 108—Filing Copies of Reports and Statements with State Officers

Section 108.1 Filing Requirements

Section 11 CFR 108.1, which sets out the general filing requirements for statements and reports, is being divided into two paragraphs. Paragraph (a) generally follows the previous rule setting out the requirement for filing with the appropriate State offices, and references the new statutory exception. New paragraph (b) tracks the language of 2 U.S.C. 439(c), stating that the filing requirements and duties of State officers under 11 CFR part 108 shall not apply to a State if the Commission has determined that the State maintains a system that can electronically receive and duplicate reports and statements that are filed with the Commission. In addition, the Commission is exempting from these requirements reports and statements that are not filed with the Commission, but which can nevertheless be accessed electronically from the Commission's site on the World Wide Web, www.fec.gov.

On October 14, 1999, the Commission approved a State filing waiver program to implement this provision of the Act. In order to qualify for the waiver, a State must certify that it has a system in place that ensures public Internet access to the FEC's web site, where visitors can view and copy reports and statements. The system must include at least one computer terminal that can electronically access the Commission's web page, with at least one printer, connected either directly or through a network. The State must also certify that it will, to the greatest extent possible, allow anyone requesting Federal campaign finance data to use the computer terminal at any time during regular business hours.

Each State that wishes to obtain a waiver of the section 439 receipt and maintenance requirements must submit a written certification to the Commission that describes its system for electronically receiving and duplicating reports from the Commission, and the extent to which that system is available to the public. If the system satisfies the above criteria, the Commission will so notify the State. It will also publish this information in the FEC *Record,* and place it on the Commission's web site. If a State fails to submit a such a certification, the Commission will be unable to make the requisite determination, and the State will remain subject to the section 439(a) and (b) receipt and maintenance requirements. A number of States have already obtained waivers through this process, and further requests are pending.

Both commenters who addressed this issue objected to this portion of the proposed rule. They specifically questioned the NPRM's proposal to continue the obligation of a State to maintain duplicate reports if the Commission does not make the determination described above and, thus, the State does not meet the statutory requirements to be released from these duties. These commenters asserted that the provision is unconstitutional because the Federal Government cannot impose duties on State officers to execute Federal laws. *Printz* v. *United States*, 117 S. Ct. 2365, 2384 (1997) (invalidating the Brady Handgun Violence Prevention Act's requirement at 18 U.S.C. 922(s)(2) that the States' chief law enforcement officers conduct background checks on prospective handgun purchasers as an unconstitutional obligation on State officers to execute Federal laws); *see also United States* v. *New York*, 505 U.S. 144 (1992) (invalidating provisions of the Low-Level Radioactive Waste Policy Act that required States to accept ownership of waste or to regulate it according to congressional instructions). They suggested that the Commission change the proposed rule to request, but not require, State offices to discharge the filing and maintenance duties set out in the statute and in the NPRM.

While the Supreme Court has invalidated a number of Federal statutes imposing burdens on the States, the Commission believes that 2 U.S.C. 439 would pass constitutional muster under Congress' authority to regulate the time, place and manner of holding Federal elections. U.S. Const., Art. I, sec. 4, cl. 1. *See Foster* v. *Love*, 118 S.Ct. 464 (1997) (holding Louisiana's open primary system to violate 2 U.S.C. 1, 7 (which imposes a uniform national election day), which was enacted pursuant to the Elections Clause); *Smiley* v. *Holm*, 285 U.S. 335, 366–67 (1932) (Elections Clause encompasses congressional power to prevent ''corrupt practices''); *Ex Parte Siebold*, 100 U.S. 371, 392 (1879) (''(T)he (Elections Clause) contemplates such co-operation (between the States and the Federal government) whenever Congress deems it expedient to alter or *add to* existing regulations of the State'' (emphasis added)); *Condon* v. *Reno*, 913 F.Supp. 946 (D. S.C. 1995) (holding as valid under the Elections Clause imposition upon States of National Voter Registration Act).

As explained above, the Commission is not planning to force unwilling States to seek exemptions from the records receipt and maintenance requirements. Rather, the Commission is granting waivers from these requirements only to those States that request them. Moreover, the Commission has actively worked with the States to insure that the procedures to obtain a waiver are reasonable and not unduly burdensome.

The Commission also considered whether the new regulations would trigger the requirements of the Unfunded Mandates Reform Act of 1995, Pub. L. 104–4, 109 Stat. 48. *See* 2 U.S.C. 658(1). That Act prohibits federal agencies from imposing costly new burdens on State governments unless certain procedures are followed. These include consulting State and local governments that would be affected by the new rules, and checking to determine whether Federal funds might be available to help with the cost of their implementation.

The Commission believes the new rules do not trigger that Act, since the cost of implementation should fall far short of the $100,000,000 figure cited as the threshold for coverage. *See* 2 U.S.C. 1532(a). Also, as part of the waiver program, the Commission is offering to provide participating offices with free computer equipment and free Internet access for the remainder of the 2000 election cycle, provided that the State agrees to provide the access effective March 1, 2001, at its own expense. The Commission is also providing staff training and assistance with state efforts to publicize this program, to those States that request this.

The final rules at part 108 are also consistent with Executive Order (''E.O.'') 13132, ''Federalism,'' which was issued on August 4, 1999 and took effect on November 2, 1999. 64 FR 43255 (Aug. 10, 1999). The Commission is not subject to this Executive Order, which at section 1(c) incorporates the definition of agency found in the Paperwork Reduction Act at 44 U.S.C. 3502(1). That definition specifically excludes the Commission, at 44 U.S.C. 3502(1)(B). However, the procedures the Commission has adopted to implement the waiver program are consistent with the Executive Order's emphasis on cooperation between the States and the

Federal Government in addressing matters of mutual concern.

Please note that certain candidates and political committees do not file their reports directly with the Commission. Candidates for nomination for election or election to the office of United States Senator; authorized committees supporting such candidates; other political committees that support only Senate candidates; and the National Republican Senatorial Committee (''NRSC'') and the Democratic Senatorial Campaign Committees (''DSCC'') file their reports with the Secretary of the Senate, who in turn provides copies to the Commission. 2 U.S.C. 432(g)(1); 11 CFR 105.2.

At its current level of technology, the Secretary of the Senate is unable to provide to the Commission copies of reports from Senate candidates and most unauthorized committees supporting Senate candidates in a form that can be reproduced on the Internet. Thus, these reports cannot currently be accessed electronically by State offices. Therefore, for the time being, copies of these reports must continue to be filed with the appropriate State office(s), and those offices must continue to maintain them and make them available to the public.

However, the Commission now receives copies of reports filed by the NRSC and the DSCC in a format that can be reproduced over the Internet, so these reports are available on the Commission's web site. The Commission anticipates that, over time, reports filed by Senate candidates and other committees that support them will also become available on the web site. As this occurs, and as more States are certified to be eligible for a waiver, the responsibility of State offices to receive and maintain paper copies of these reports will diminish.

Section 108.2 Filing Copies of Reports and Statements in Connection with the Campaign of any Candidate Seeking Nomination for Election to the Office of President or Vice-President

The Commission is adding a cross reference to new 11 CFR 108.1(b), the records receipt and maintenance exception, to the first sentence of this section.

Section 108.3 Filing Copies of Reports and Statements in Connection With the Campaign of any Congressional Candidate

This section has been restructured to reflect the potential exemption. New paragraph (a) addresses Senate candidates, their authorized committees, committees that support only Senate candidates, and the NRSC and the DSCC, who must continue to file duplicate copies of reports with State officers, unless such reports are available on the Commission's web site, and the State has received a waiver pursuant to these rules. Paragraph (b) notes that other candidates and committees need not file duplicate reports in those States that have obtained a waiver pursuant to 2 U.S.C. 439(c). New paragraph (c) retains the language in the current rule stating that, for committees other than authorized committees, where reports cover activity in more than one State, the committees need file, and State offices retain, only those portions of reports that are applicable to candidates seeking election in that State. Please note that this applies only to States that have not obtained a waiver.

Section 108.4 Filing Copies of Reports by Committees Other Than Principal Campaign Committees

The Commission has added a cross reference to new paragraph 11 CFR 108.1(b) to this section, which requires unauthorized committees that file reports and statements in connection with Presidential elections to file copies with the State officer(s) of the State(s) in which both the recipient and the contributing committees have their headquarters. The Commission has also slightly reworded this section for clarity.

Section 108.6 Duties of State Officers

The Commission has added a cross reference to new paragraph 11 CFR 108.1(b) to this section, which provides guidance to State officers on how to organize, preserve and make available for public copying and inspection the reports and statements filed with those offices. It is also revising paragraph (b) to provide that paper or microfilm copies of documents that are available electronically from the Commission need not be kept for two years. This is consistent with the language at 2 U.S.C. 439(b)(2), which states that covered documents must be kept for two years ''either in original filed form or in facsimile copy by microfilm or otherwise'' (emphasis added). The Commission interprets this to cover reports that it makes available through its web site, and its practice is to make electronic copies available for more than two years.

The Commission is also adding a new paragraph (e) to this section, which allows States that obtain waivers to charge reasonable fees to those who access and copy campaign finance documents electronically. The new paragraph is consistent with paragraph (c) of this section, which allows States to charge reasonable fees to those making copies of paper or microfilm documents.

The Commission is also correcting the reference in the introductory material to read ''108.6(a) through (e)''.

Certification of No Effect Pursuant to 5 U.S.C. 605(b) (Regulatory Flexibility Act)

The attached rules will not have a significant economic impact on a substantial number of small entities. The new rules conform to statutory amendments, and also reduce the reporting burden of affected entities. Therefore, these rules will not have a significant economic effect on a substantial number of small entities.

List of Subjects in 11 CFR Part 108

Elections, Reporting and recordkeeping requirements.

For the reasons set out in the preamble, Subchapter A of Chapter I, Title 11 of the *Code of Federal Regulations* is amended to read as follows:

PART 108—FILING COPIES OF REPORTS AND STATEMENTS WITH STATE OFFICERS (2 U.S.C. 439)

1. The authority citation for Part 108 continues to read as follows:

Authority: 2 U.S.C. 434(a)(2), 438(a)(8), 439, 453.

2. Section 108.1 is amended by redesignating the text as paragraph (a), revising the first sentence of newly redesignated paragraph (a), and adding new paragraph (b) to read as follows:

§ 108.1 Filing Requirements (2 U.S.C. 439(a)(1)).

(a) Except as provided in paragraph (b) of this section, a copy of each report and statement required to be filed by any person under the Act shall be filed either with the Secretary of State of the appropriate State or with the State officer who is charged by State law with maintaining state election campaign reports. * * *

(b) The filing requirements and duties of State officers under this part 108 shall not apply to a State if the Commission has determined that the State maintains a system that can electronically receive and duplicate reports and statements filed with the Commission. Once a State has obtained a waiver pursuant to this paragraph, the waiver shall apply to all reports that can be electronically accessed and duplicated from the Commission, regardless of whether the

report or statement was originally filed with the Commission.

3. Section 108.2 is amended by revising the first sentence to read as follows:

§ 108.2 Filing copies of reports and statements in connection with the campaign of any candidate seeking nomination for election to the Office of President or Vice-President (2 U.S.C. 439(a)(2)).

Except as provided in § 108.1(b), a copy of each report and statement required to be filed under the Act (including 11 CFR part 104) by a Presidential or Vice Presidential candidate's principal campaign committee, or under 11 CFR 104.4 or part 109 by any other person making independent expenditures, in connection with a candidate seeking nomination for election to the office of President or Vice-President, shall be filed with the State officer of each State in which an expenditure is made in connection with the campaign of a candidate seeking nomination for election to the office of President or Vice-President. * * *

4. Section 108.3 is revised to read as follows:

§ 108.3 Filing copies of reports and statements in connection with the campaign of any congressional candidate (2 U.S.C. 439(a)(2)).

(a) Except as provided in § 108.1(b), a copy of each report and statement required to be filed under 11 CFR part 104 by candidates, and the authorized committees of candidates, for nomination for election or election to the office of Senator; by other committees that support only such candidates; and by the National Republican Senatorial Committee and the Democratic Senatorial Campaign Committees shall be filed with the appropriate State officer of that State in which an expenditure is made in connection with the campaign.

(b) Except as provided in § 108.1(b), a copy of each report and statement required to be filed under 11 CFR part 104 by candidates, and authorized committees of candidates, for nomination for election or election to the office of Representative in, Delegate or Resident Commissioner to the Congress, or by unauthorized committees, or by any other person under 11 CFR part 109, in connection with these campaigns shall be filed with the appropriate State officer of that State in which an expenditure is made in connection with the campaign.

(c) Unauthorized committees that file reports pursuant to paragraph (b) of this section are required to file, and the Secretary of State is required to retain, only that portion of the report applicable to candidates seeking election in that State.

5. Section 108.4 is revised to read as follows:

§ 108.4 Filing copies of reports by committees other than principal campaign committees (2 U.S.C. 439(a)(2)).

Except as provided in § 108.1(b), any unauthorized committee that makes contributions in connection with a Presidential election and that is required to file a report(s) and statement(s) under the Act shall file a copy of such report(s) and statement(s) with the State officer of the State in which both the recipient and contributing committees have their headquarters.

6. Section 108.6 is amended by revising the introductory text and paragraph (b), by removing the period and adding ''; and'' at the end of paragraph (d), and by adding new paragraph (e), to read as follows:

§ 108.6 Duties of State officers (2 U.S.C. 439(b)).

Except as provided in § 108.1(b), the Secretary of State, or the equivalent State officer, shall carry out the duties set forth in paragraphs (a) through (e) of this section:

* * * * *

(b) Preserve such reports and statements (either in original form or in facsimile copy by microfilm or otherwise) filed under the Act for a period of 2 years from the date of receipt, except that reports and statements that can be accessed and duplicated electronically from the Commission need not be so preserved;

* * * * *

(d) * * * ; and

(e) If the State has received a waiver of these filing requirements pursuant to § 108.1(b), allow access to and duplication of reports and statements covered by that waiver, except that such access and duplication shall be at the expense of the person making the request and at a reasonable fee.

Dated: March 17, 2000.

Darryl R. Wold,

Chairman, Federal Election Commission.

[FR Doc. 00–7109 Filed 3–21–00; 8:45 am]

BILLING CODE 6715–01–P

NATIONAL CREDIT UNION ADMINISTRATION

12 CFR Part 701

Organization and Operations of Federal Credit Unions

AGENCY: National Credit Union Administration (NCUA).

ACTION: Final rule.

SUMMARY: NCUA is amending its lending regulation to permit federal credit unions to advance money to members to cover account deficits without having a credit application from the member on file if the credit union has a written overdraft policy. The change will enable credit unions to offer this service without subjecting credit unions to undue risk.

DATES: This rule is effective July 1, 2000.

ADDRESSES: National Credit Union Administration, 1775 Duke Street, Alexandria, Virginia 22314–3428.

FOR FURTHER INFORMATION CONTACT: Michael J. McKenna, Senior Staff Attorney, or Regina M. Metz, Staff Attorney, in the Division of Operations, Office of General Counsel, at the above address or telephone: (703) 518–6540.

SUPPLEMENTARY INFORMATION:

A. Background

The Federal Credit Union Act does not specifically address a federal credit union's (FCU's) authority to pay or honor a share draft that will result in an overdrawn account. NCUA's longstanding position has been that an overdraft, as a financial accommodation to a member, constitutes a loan or line of credit to a member.

A number of FCUs and trade associations contended that FCUs are at a competitive disadvantage because they are unable to cover a member's overdraft absent a prearranged, written agreement for the extension of credit. The NCUA Board believed this argument had merit although there might be some safety and soundness concerns with extending credit to a member without a written lending agreement. Therefore, on September 16, 1999, the NCUA Board issued a proposed amendment to its general lending regulation with a sixty-day comment period (64 FR 52694 September 30, 1999).

The proposed amendment to section 701.21(c)(3) provided that a credit union could advance money to a member to cover his or her account deficit without having a credit application on file if the credit union had a written overdraft policy. Specifically, the NCUA Board proposed that a credit union's written

overdraft policy must: (1) Address how the credit union will honor overdrafts; (2) set a cap on the total dollar amount of all overdrafts the credit union will honor; (3) establish a time limit, not to exceed ten business days, for a member either to deposit funds or obtain an approved loan from the credit union to cover each overdraft; (4) limit the number and dollar amount of overdrafts the credit union will honor per member; and (5) establish the fee and interest rate, if any, the credit union will charge members for honoring overdrafts.

B. Comments

The comment period ended on November 29, 1999. Twenty-four comments were received. Comments were received from fourteen federal credit unions, eight state leagues, and two national credit union trade associations. The commenters were generally supportive of permitting payment of overdrafts without credit applications on file, but most commenters suggested modifications.

Two commenters completely supported NCUA's proposal. Five commenters generally supported the proposal. Eight commenters supported requiring credit unions to have overdraft policies; however, seven of these eight commenters opposed NCUA mandating what should be included in the overdraft policy. Seven of the twenty-four commenters stated that an overdraft is not a loan and this regulation is unnecessary. These commenters believe that credit unions have the ability to engage in this activity without regulatory authorization. The NCUA Board disagrees. The NCUA Board believes an overdraft is a loan, and, in order for a federal credit union to advance funds to cover an overdraft without first having a written application in place as required by NCUA's lending regulation, a regulatory change is in order. The NCUA Board also continues to believe that a written overdraft policy will offset safety and soundness concerns and prevent insider abuses.

We received comment on the following issues:

Should the policy address how the credit union will honor overdrafts?

One commenter requested clarification on what NCUA is seeking to cover with this requirement. After further review, the NCUA Board believes stating how the overdraft is covered is superfluous because of the other specific items the policy must address. The NCUA Board has deleted this requirement from the final amendment.

Should the policy set a cap on the total dollar amount of all overdrafts the credit union will honor?

Two commenters approved of setting a dollar cap in the policy. Three commenters opposed setting such a limit. Eight commenters stated that the written policy should address this issue, but that NCUA should not establish the limit. The NCUA Board did not suggest a specific dollar cap in the proposal. The NCUA Board has decided that the policy must set a cap and the credit union should establish the dollar amount.

Should the overdraft policy establish a time limit not to exceed ten business days for a member either to deposit funds or obtain an approved loan from the credit union to cover each overdraft?

Two commenters supported the ten-day time limit. Eight commenters stated that the credit union, not NCUA, should establish the time limit for the member to either deposit funds or obtain an approved loan from the credit union. Three commenters suggested a 30-day time limit and two commenters suggested a 90-day time limit. Three commenters suggested other time limits. The NCUA Board believes that a time limit is necessary for safety and soundness reasons. A ten-day time limit may not be sufficient for the member in all cases; therefore, the rule provides that a credit union's policy must establish a time limit, not to exceed forty-five days. This should be sufficient time for any prudent individual to cover the overdraft or apply for a loan.

One commenter asked whether the time limit begins to run at the time the credit union advances the overdraft protection to cover the member's account deficit or from the date the member receives notice of the overdraft. The time limit starts to run the day the credit union advances the overdraft protection.

Should the overdraft policy require a credit union to write off any overdraft for which the member has not either repaid the credit union or obtained an approved loan?

One commenter stated that NCUA should set a time limit after which the credit union must write off the loan. One commenter suggested 30 days. Eight commenters stated that the credit union, not NCUA, should set the time limit to write off the loan. The NCUA Board did not propose to establish when a credit union needs to write off an overdraft for which the member has not either repaid the credit union or obtained an approved loan. In the final rule, to maintain maximum flexibility for credit unions, the NCUA Board is not setting a time limit. Each credit union should establish its own requirement for when it will write off an overdraft consistent with its lending policies.

Should the policy limit the number and dollar amount of overdrafts the credit union will honor per member?

Four commenters stated that the credit union, not NCUA, should establish this limit in the policy. One commenter stated that a credit union's management, not the board of directors, should set the limit on the dollar amount of overdrafts the credit union will honor per member. Three commenters would eliminate a limit on the number of overdrafts the credit union will honor per member. These commenters believe that the number of overdrafts have no bearing on risk and the reference to the ''number of overdrafts'' should be removed from the rule. These commenters would also go farther and eliminate the limit on the dollar amount per member from the written overdraft policy.

In the proposal, the NCUA Board did not establish a number and dollar limit but rather proposed that each credit union should establish its own limit. However, the NCUA Board agrees with those commenters who stated that the number of overdrafts a member incurs may have no bearing on risk. The NCUA Board continues to believe that the dollar amount per member does raise significant safety and soundness concerns. Therefore, the final rule simply requires that the credit union's own policy set forth the dollar amount of overdrafts the credit union will honor per member. As in the proposed rule, to provide maximum flexibility to credit unions, it is up to the credit union, not NCUA, to establish this dollar amount. This dollar amount should be consistent with the credit union's ability to absorb losses and manage risk.

Should the policy establish the fee and interest rate, if any, the credit union will charge members for honoring overdrafts?

One commenter stated the policy itself need not contain the amount of the overdraft fee and interest rate, but simply should require that such fee and interest rate be established and disclosed. The NCUA Board continues to believe that, if a credit union is going to engage in this activity, the fee and interest rate, if any, should be set forth in the policy. The NCUA Board believes this is a matter of prudent internal control and sound judgment.

Should the rule impose additional restrictions on overdrafts by credit union employees or officials?

Eight commenters opposed any additional restrictions. These commenters believe that additional regulatory restrictions are not necessary. Two commenters would impose additional restrictions on overdrafts by credit union employees or officials but provided no persuasive rationale on why the rule should treat them differently than other credit union members. NCUA's regulations on loans to officials and nonpreferential treatment provide sufficient regulatory protection against any impropriety or appearance of impropriety. *See* 12 CFR 701.21(d).

C. Regulatory Procedures

Regulatory Flexibility Act

The Regulatory Flexibility Act requires NCUA to prepare an analysis to describe any significant economic impact any final regulation may have on a substantial number of small entities (primarily those under $1 million in assets). For purposes of this analysis, credit unions under $1 million in assets will be considered small entities. As of June 30, 1999, there were 1,690 such entities with a total of $807.3 million in assets, with an average asset size of $0.5 million. These small entities make up 15.6 percent of all credit unions, but only 0.2 percent of all credit union assets.

The final amendment permits federal credit unions to advance money to members to cover account deficits without having a credit application from the member on file if the credit union has a written overdraft policy. The NCUA Board does not believe that the final amendment will impose reporting or recordkeeping burdens that require specialized professional skills not available to them.

The NCUA Board has determined and certifies that this final amendment, if adopted, will not have a significant economic impact on a substantial number of small credit unions.

Paperwork Reduction Act

The reporting requirements in section 701.21(c)(3) have been submitted to and approved by the Office of Management and Budget under OMB control number 3133–0139. Under the Paperwork Reduction Act of 1995, no persons are required to respond to a collection of information unless it displays a valid OMB number. The control number is displayed in the table at 12 CFR part 795.

Executive Order 13132

Executive Order 13132 encourages independent regulatory agencies to consider the impact of their regulatory action on state and local interests. NCUA, an independent regulatory agency as defined in 44 U.S.C 3502(5), voluntarily adheres to the fundamental federalism principles addressed by the executive order. This final amendment will only apply to federal credit unions. This final rule makes no changes with respect to state credit unions and therefore, will not impact state and local interests.

Small Business Regulatory Enforcement Fairness Act

The Small Business Regulatory Enforcement Fairness Act of 1996 (Pub. L. 104–121) provides generally for congressional review of agency rules. A reporting requirement is triggered in instances where NCUA issues a final rule as defined by Section 551 of the Administrative Procedures Act. 5 U.S.C. 551. The Office of Management and Budget has determined that this is not a major rule.

D. Agency Regulatory Goal

NCUA's goal is clear, understandable regulations that impose a minimal regulatory burden. We requested comments on whether the proposed amendment were understandable and minimally intrusive if implemented as proposed. We received no specific comment on this issue.

List of Subjects in 12 CFR Part 701

Credit, Credit unions, Reporting and recordkeeping requirements.

By the National Credit Union Administration Board on March 16, 2000.

Becky Baker,

Secretary of the Board.

For the reasons set forth in the preamble, the National Credit Union Administration is amending 12 CFR part 701 as follows:

PART 701—ORGANIZATION AND OPERATION OF FEDERAL CREDIT UNIONS

1. The authority citation continues to read as follows:

Authority: 12 U.S.C. 1752(5), 1755, 1756, 1757, 1759, 1761a, 1761b, 1766, 1767, 1782, 1784, 1787, and 1789.

Section 701.6 is also authorized by 15 U.S.C. 3717.

Section 701.31 is also authorized by 15 U.S.C. 1601 *et seq.*; 42 U.S.C. 1981 and 3601–3610.

Section 701.35 is also authorized by 42 U.S.C. 4311–4312.

2. Amend § 701.21 by revising paragraph (c)(3) to read as follows:

§ 701.21 Loans to members and lines of credit to members.

* * * * *

(c) * * *

(3) *Credit applications and overdrafts.* Consistent with policies established by the board of directors, the credit committee or loan officer shall ensure that a credit application is kept on file for each borrower supporting the decision to make a loan or establish a line of credit. A credit union may advance money to a member to cover an account deficit without having a credit application from the borrower on file if the credit union has a written overdraft policy. The policy must: set a cap on the total dollar amount of all overdrafts the credit union will honor consistent with the credit union's ability to absorb losses; establish a time limit not to exceed forty-five calendar days for a member either to deposit funds or obtain an approved loan from the credit union to cover each overdraft; limit the dollar amount of overdrafts the credit union will honor per member; and establish the fee and interest rate, if any, the credit union will charge members for honoring overdrafts.

* * * * *

[FR Doc. 00–7039 Filed 3–21–00; 8:45 am]

BILLING CODE 7535–01–U

DEPARTMENT OF TRANSPORTATION

Federal Aviation Administration

14 CFR Part 39

[Docket No. 98–NM–94–AD; Amendment 39–11636; AD 2000–05–26]

RIN 2120–AA64

Airworthiness Directives; Aerospatiale Model ATR42–200, ATR42–300, and ATR42–320 Series Airplanes

AGENCY: Federal Aviation Administration, DOT.

ACTION: Final rule.

SUMMARY: This amendment supersedes an existing airworthiness directive (AD), applicable to certain Aerospatiale Model ATR42–300 and ATR42–320 series airplanes, that currently requires inspections to determine the proper installation of rivets in certain key holes and to detect cracks in the area of the key holes where rivets are missing; and correction of discrepancies. This amendment increases the compliance time for the existing requirements and expands the applicability of the existing

AD to include additional airplanes. This action also requires various inspections of the subject area for discrepancies, and corrective actions, if necessary; and replacement of certain cargo door hinges with new hinges. For certain airplanes, this action also requires replacement of friction plates, stop fittings, and bolts with new parts. This amendment is prompted by issuance of mandatory continuing airworthiness information by a foreign civil airworthiness authority. The actions specified by this AD are intended to prevent fatigue cracks of the cargo door skin, certain frames, and entry door stop fittings and friction plates, which could result in reduced structural integrity of the airplane.

DATES: Effective April 26, 2000.

The incorporation by reference of certain publications listed in the regulations is approved by the Director of the Federal Register as of April 26, 2000.

The incorporation by reference of Avions de Transport Regionale (ATR) Service Bulletin ATR42–53–0070, Revision 2, dated March 22, 1993, was approved previously by the Director of the Federal Register as of November 18, 1993 (58 FR 53853, October 19, 1993).

ADDRESSES: The service information referenced in this AD may be obtained from Aerospatiale, 316 Route de Bayonne, 31060 Toulouse, Cedex 03, France. This information may be examined at the Federal Aviation Administration (FAA), Transport Airplane Directorate, Rules Docket, 1601 Lind Avenue, SW., Renton, Washington; or at the Office of the Federal Register, 800 North Capitol Street, NW., suite 700, Washington, DC.

FOR FURTHER INFORMATION CONTACT: Norman B. Martenson, Manager, International Branch, ANM–116, FAA, Transport Airplane Directorate, 1601 Lind Avenue, SW., Renton, Washington 98055–4056; telephone (425) 227–2110; fax (425) 227–1149.

SUPPLEMENTARY INFORMATION: A proposal to amend part 39 of the Federal Aviation Regulations (14 CFR part 39) by superseding 93–18–04, amendment 39–8689 (58 FR 53853, October 19, 1993), which is applicable to certain Aerospatiale Model ATR42–300 and ATR42–320 series airplanes, was published in the **Federal Register** on October 25, 1999 (64 FR 57409). The action proposed to increase the compliance time for the existing requirements and expand the applicability of the existing AD to include additional airplanes. The action also proposed to require various inspections of the subject area for discrepancies, and corrective actions, if necessary; and replacement of certain cargo door hinges with new hinges. For certain airplanes, the action also proposed to require replacement of friction plates, stop fittings, and bolts with new parts.

Interested persons have been afforded an opportunity to participate in the making of this amendment. Due consideration has been given to the comments received.

Approved Repairs

One commenter, an operator, expresses concern that paragraphs (c) and (d)(2)(ii) of the proposed AD mandate that any repairs, previously conducted through Aerospatiale, now must be approved by the Manager, International Branch, ANM–116, Transport Airplane Directorate, FAA; or the Direction Genrale de l'Aviation Civile (DGAC) (or its delegated agent). The commenter is concerned that, if the only resources for repair approvals are those mentioned here, any repair approval process will not be responsive on a timely basis. The commenter states that notification to the Manager, ANM–116, of damage found and the repair method used, following embodiment, would be more appropriate.

The FAA infers that the commenter is requesting that the AD be revised to allow repair approvals through Aerospatiale, with subsequent notification to the Manager, ANM–116. The FAA does not concur. To specify within an AD that repairs are to be accomplished in accordance with the manufacturer would be delegating the FAA's rulemaking authority to the manufacturer. Since the referenced service information does not provide appropriate repair procedures, the FAA must require that operators accomplish necessary repairs in accordance with a method approved by the FAA or the DGAC (or its delegated agent). The FAA notes that, if Aerospatiale has been designated by the DGAC as a delegated agent for repair approvals, such approvals by Aerospatiale would be acceptable for compliance with this AD. No change to the AD is necessary.

Prior Repairs

The same commenter notes that there should be some consideration for airplanes on which the modification has already been accomplished with some form of repair (prior to the effective date of the AD). As written, the AD would require that any such repair be ''reapproved'' by the FAA or DGAC.

The FAA does not concur. As noted in the FAA's response to the previous comment, repairs approved by Aerospatiale may be acceptable for compliance with this AD, if Aerospatiale is a delegated agent of the DGAC for such repairs. If this is the case, no ''reapproval'' is necessary, since such approved repairs would be acceptable for compliance with the requirements of this AD. Further, sufficient time is provided prior to the compliance thresholds of this AD to allow operators to determine if approvals must be obtained for previously accomplished repairs, and to obtain such approvals, if necessary. No change to the AD is necessary.

Service Bulletin Revisions

The same commenter requests that the proposed AD be revised to include later revisions of two service bulletins, and notes that the changes made do not affect the technical content of either bulletin. The commenter states that ATR Service Bulletin ATR42–53–0070, Revision 3, dated February 19, 1999, is the most current version and should be included in paragraph (a) of the AD. The commenter also states that ATR Service Bulletin ATR42–53–0076, Revision 3, dated February 19, 1999, has been released and should be included in paragraph (d) of the AD. Revision 2 of each of these service bulletins was cited as the appropriate source of service information in the referenced paragraph of the proposed AD.

The FAA concurs. The FAA has reviewed the referenced service bulletins and agrees that equivalent technical information is contained in the later revisions of the service bulletins. The FAA has revised paragraphs (a) and (d) of the final rule to include these revisions as appropriate sources of service information.

Conclusion

After careful review of the available data, including the comments noted above, the FAA has determined that air safety and the public interest require the adoption of the rule with the changes previously described. The FAA has determined that these changes will neither increase the economic burden on any operator nor increase the scope of the AD.

Cost Impact

There are approximately 106 airplanes of U.S. registry that will be affected by this AD.

The general visual inspection of fuselage frames 25 and 27 that is required by this AD will take approximately 3 work hours per airplane to accomplish, at an average labor rate of $60 per work hour. Based on these figures, the cost impact of this inspection required by this AD on U.S.

operators is estimated to be $180 per airplane.

The cargo door hinge and skin replacement that is required by this AD will take approximately 250 work hours per airplane to accomplish, at an average labor rate of $60 per work hour. Required parts will cost approximately $9,880 per airplane. Based on these figures, the cost impact of the door structure replacement required by this AD on U.S. operators is estimated to be $24,880 per airplane.

The general visual inspection of the key and tooling holes that is required by this AD will take approximately 100 work hours per airplane to accomplish, at an average labor rate of $60 per work hour. Based on these figures, the cost impact of this inspection required by this AD on U.S. operators is estimated to be $6,000 per airplane.

The eddy current and detailed visual inspections of the forward entry door stop fitting and friction plate that are required by this AD will take approximately 2 work hours per airplane to accomplish, at an average labor rate of $60 per work hour. Based on these figures, the cost impact of this inspection required by this AD on U.S. operators is estimated to be $120 per airplane.

The replacement of the forward entry door stop fitting, friction plate, and upper door corner that is required in this AD action will take approximately 50 work hours per airplane to accomplish. The manufacturer has committed previously to its customers that it will bear the cost of replacement parts. As a result, the cost of those parts is not attributable to this AD. Based on this figure, the cost impact of the replacement required by this AD on U.S. operators is estimated to be $3,000 per airplane.

The cost impact figures discussed above are based on assumptions that no operator has yet accomplished any of the requirements of this AD action, and that no operator would accomplish those actions in the future if this AD were not adopted.

Regulatory Impact

The regulations adopted herein will not have a substantial direct effect on the States, on the relationship between the national Government and the States, or on the distribution of power and responsibilities among the various levels of government. Therefore, it is determined that this final rule does not have federalism implications under Executive Order 13132.

For the reasons discussed above, I certify that this action (1) is not a ''significant regulatory action'' under Executive Order 12866; (2) is not a ''significant rule'' under DOT Regulatory Policies and Procedures (44 FR 11034, February 26, 1979); and (3) will not have a significant economic impact, positive or negative, on a substantial number of small entities under the criteria of the Regulatory Flexibility Act. A final evaluation has been prepared for this action and it is contained in the Rules Docket. A copy of it may be obtained from the Rules Docket at the location provided under the caption **ADDRESSES**.

List of Subjects in 14 CFR Part 39

Air transportation, Aircraft, Aviation safety, Incorporation by reference, Safety.

Adoption of the Amendment

Accordingly, pursuant to the authority delegated to me by the Administrator, the Federal Aviation Administration amends part 39 of the Federal Aviation Regulations (14 CFR part 39) as follows:

PART 39—AIRWORTHINESS DIRECTIVES

1. The authority citation for part 39 continues to read as follows:

Authority: 49 U.S.C. 106(g), 40113, 44701.

§ 39.13 [Amended]

2. Section 39.13 is amended by removing amendment 39–8689 (58 FR 53853, October 19, 1993), and by adding a new airworthiness directive (AD), amendment 39–11636, to read as follows:

2000–05–26 Aerospatiale: Amendment 39–11636. Docket 98-NM–94-AD. Supersedes AD 93–18–04, Amendment 39–8689.

Applicability: All Model ATR42–200, ATR42–300, and ATR42–320 series airplanes; certificated in any category.

Note 1: This AD applies to each airplane identified in the preceding applicability provision, regardless of whether it has been modified, altered, or repaired in the area subject to the requirements of this AD. For airplanes that have been modified, altered, or repaired so that the performance of the requirements of this AD is affected, the owner/operator must request approval for an alternative method of compliance in accordance with paragraph (h) of this AD. The request should include an assessment of the effect of the modification, alteration, or repair on the unsafe condition addressed by this AD; and, if the unsafe condition has not been eliminated, the request should include specific proposed actions to address it.

Compliance: Required as indicated, unless accomplished previously.

To prevent fatigue cracks of the cargo door skin, certain frames, entry door stop fittings, or friction plates, which could result in reduced structural integrity of the airplane, accomplish the following:

Frame 25 and 27 Inspection

(a) For airplanes having serial numbers 005 through 016 inclusive, 018 through 030 inclusive, 032 through 036 inclusive, 038, 040, 042, 043, 048 through 062 inclusive, 064 through 090 inclusive, 092 through 094 inclusive, and 096 through 228 inclusive: Prior to the accumulation of 36,000 total flight cycles, or within 180 days after the effective date of this AD, whichever occurs later, conduct a general visual inspection of fuselage frames 25 and 27 to verify the proper installation of a rivet in each of the key holes, in accordance with Avions de Transport Regional (ATR) Service Bulletin ATR42–53–0070, Revision 2, dated March 22, 1993, or Revision 3, dated February 19, 1999.

Note 2: For the purposes of this AD, a general visual inspection is defined as ''A visual examination of an interior or exterior area, installation, or assembly to detect obvious damage, failure, or irregularity. This level of inspection is made under normally available lighting conditions such as daylight, hangar lighting, flashlight, or drop-light, and may require removal or opening of access panels or doors. Stands, ladders, or platforms may be required to gain proximity to the area being check.''

Note 3: Inspection of fuselage frames 25 and 27 accomplished prior to the effective date of this AD in accordance with ATR Service Bulletin ATR42–53–0070, dated June 10, 1991, or Revision 1, dated June 12, 1992, is considered acceptable for compliance with the requirements of paragraph (a) of this AD.

(1) If a rivet is installed in each of the key holes, no further action is required by this paragraph.

(2) If a rivet is not installed in each of the key holes, prior to further flight, perform an eddy current inspection of each open key hole to detect cracks, in accordance with the service bulletin.

(i) If no crack is found during the eddy current inspection, prior to further flight, install a rivet in the open key hole in accordance with the service bulletin. After such installation, no further action is required by this paragraph for that key hole.

(ii) If any crack is found during the eddy current inspection, prior to further flight, repair the crack in accordance with a method approved by the Manager, International Branch, ANM–116, FAA, Transport Airplane Directorate, or the Direction Generale de l'Aviation Civile (DGAC) (or its delegated agent). For a repair method to be approved by the Manager, International Branch, ANM–116, as required by this paragraph, the Manager's approval letter must specifically reference this AD.

Inspection and Modification of Cargo Door Structure

(b) For airplanes equipped with a cargo compartment door on which Aerospatiale Modification 3191 has not been accomplished: Prior to the accumulation of 27,000 total flight cycles, or within 180 days after the effective date of this AD, whichever occurs later, except as provided by paragraph (c) of this AD, replace the hinges on the cargo

compartment door and fuselage (including inspections for fastener type and tolerances, hole diameters, or cracking, and repair; as applicable) with new improved hinges, in accordance with paragraph 2. of the Accomplishment Instructions of ATR Service Bulletin ATR42–52–0058, Revision 1, dated March 1, 1995.

(c) Where the instructions in ATR Service Bulletin ATR42–52–0058, Revision 1, dated March 1, 1995, specify that ATR is to be contacted for a repair, prior to further flight, repair in accordance with a method approved by the Manager, International Branch, ANM–116, or the DGAC (or its delegated agent).

Frame Inspection

(d) For airplanes having serial numbers 003 through 208 inclusive: Prior to the accumulation of 36,000 total flight cycles, or within 180 days after the effective date of this AD, whichever occurs later, conduct a general visual inspection of the identified fuselage frames for proper installation of a rivet in each of the tooling and key holes, in accordance with ATR Service Bulletin ATR42–53–0076, Revision 2, dated October 15, 1996, or Revision 3, dated February 19, 1999.

(1) If a rivet is installed in each of the tooling or key holes, no further action is required by this paragraph.

(2) If a rivet is not installed in each of the tooling and key holes, prior to further flight, perform a detailed visual inspection of each open tooling or key hole to detect cracks, in accordance with the service bulletin.

Note 4: For the purposes of this AD, a detailed visual inspection is defined as: ''An intensive visual examination of a specific structural area, system, installation, or assembly to detect damage, failure, or irregularity. Available lighting is normally supplemented with a direct source of good lighting at intensity deemed appropriate by the inspector. Inspection aids such as mirror, magnifying lenses, etc. may be used. Surface cleaning and elaborate access procedures may be required.''

(i) If no crack is found during the detailed visual inspection required by paragraph (d)(2) of this AD, prior to further flight, install a rivet in the open hole in accordance with the service bulletin.

(ii) If any crack is found during the visual inspection required by paragraph (d)(2) of this AD, prior to further flight, repair the crack in accordance with a method approved by the Manager, International Branch, ANM–116, or the DGAC (or its delegated agent).

Inspection and/or Replacement of Entry Door Structure

(e) For Model ATR42–300 series airplanes having serial numbers listed in ATR Service Bulletin ATR42–52–0052, Revision 1, dated March 2, 1993: Except as provided by paragraph (f) of this AD, prior to the accumulation of 10,000 total flight cycles, or within 90 days after the effective date of this AD, whichever occurs later, accomplish the requirements of paragraphs (e)(1) and (e)(2) of this AD.

(1) Perform an eddy current inspection of the forward entry door stop holes to detect cracking, in accordance with the service bulletin. If any cracking is detected, prior to further flight, replace any cracked forward entry door stop fitting with a new fitting, in accordance with the service bulletin.

(2) Perform a detailed visual inspection of the forward entry door friction plates for wear, in accordance with the service bulletin. If wear is found on any friction plate, and the wear has a depth equal to or greater than 0.8mm (0.0315 in.), prior to further flight, replace the friction plate with a new or serviceable part in accordance with the service bulletin.

(f) For Model ATR42–300 series airplanes listed in ATR Service Bulletin ATR42–52–0052, Revision 1, dated March 2, 1993, accomplishment of the requirements of paragraph (g) of this AD at the time specified in paragraph (e) of this AD constitutes terminating action for the requirements of paragraph (e) of this AD.

(g) For Model ATR42–300 series airplanes listed in ATR Service Bulletin ATR42–52–0059, dated February 16, 1995: Prior to the accumulation of 18,000 total flight cycles, or within 180 days after the effective date of this AD, whichever occurs later, accomplish the requirements of paragraphs (g)(1), (g)(2), and (g)(3) of this AD in accordance with the service bulletin.

(1) Replace the forward entry door friction plates with improved friction plates.

(2) Replace the upper corners of the forward entry door surround structure with improved door surround corners.

(3) Replace the forward entry door stop fittings and bolts with improved fittings and bolts.

Alternative Methods of Compliance

(h) An alternative method of compliance or adjustment of the compliance time that provides an acceptable level of safety may be used if approved by the Manager, International Branch, ANM–116. Operators shall submit their requests through an appropriate FAA Principal Maintenance Inspector, who may add comments and then send it to the Manager, International Branch, ANM–116.

Note 5: Information concerning the existence of approved alternative methods of compliance with this AD, if any, may be obtained from the International Branch, ANM–116.

Special Flight Permits

(i) Special flight permits may be issued in accordance with §§ 21.197 and 21.199 of the Federal Aviation Regulations (14 CFR 21.197 and 21.199) to operate the airplane to a location where the requirements of this AD can be accomplished.

Incorporation by Reference

(j) Except as required by paragraphs (a)(2)(ii), (c), and (d)(2)(ii) of this AD, the actions shall be done in accordance with the following Avions de Transport Regionale service bulletins, as applicable:

Service bulletin referenced and date	Page number	Revision level shown on page	Date shown on page
ATR42–53–0070, Revision 2, March 22, 1993	1, 2, 9	2	March 22, 1993.
	3–7, 10–12	1	June 12, 1992.
	8, 13	Original	June 10, 1991.
ATR42–53–0070, Revision 3, February 19, 1999.	1–6, 9	3	February 19, 1999
	7, 10–12	1	June 12, 1992.
	8, 13	Original	June 10, 1991.
ATR42–52–0058, Revision 1, March 1, 1995.	1–117	1	March 1, 1995
	39–99	(These pages are not used).	
ATR42–53–0076, Revision 2, October 15, 1996.	1–6	2	October 15, 1996
	7, 8, 11, 12, 17–19	1	November 4, 1994.
	9, 10, 13–16	Original	May 13, 1993.
ATR42–53–0076, Revision 3, February 19, 1999.	1–6	3	February 19, 1999
	7, 8, 11, 12, 17–19	1	November 4, 1994.
	9, 10, 13–16	Original	May 13, 1993.
ATR42–52–0052, Revision 1, March 2, 1993.	1–4, 9, 10	1	March 2, 1993
	5–8, 11–17	Original	January 11, 1991.
ATR42–52–0059, February 16, 1995	1–43	Original	February 16, 1995.

(1) The incorporation by reference of Avions de Transport Regionale Service Bulletin ATR42–53–0070, Revision 3, dated February 19, 1999; Avions de Transport Regionale Service Bulletin ATR42–52–0058, Revision 1, dated March 1, 1995; Avions de Transport Regionale Service Bulletin ATR42–53–0076, Revision 2, dated October 15, 1996; Avions de Transport Regionale Service Bulletin ATR42–53–0076, Revision 3, dated February 19, 1999; Avions de Transport Regionale Service Bulletin ATR42–52–0052, Revision 1, dated March 2, 1993; and Avions de Transport Regionale Service Bulletin ATR42–52–0059, dated February 16, 1995; is approved by the Director of the Federal Register in accordance with 5 U.S.C. 552(a) and 1 CFR part 51.

(2) The incorporation by reference of Avions de Transport Regionale Service Bulletin ATR42–53–0070, Revision 2, dated March 22, 1993, was approved previously by the Director of the Federal Registeras of November 18, 1993 (58 FR 53853, October 19, 1993).

(3) Copies may be obtained from Aerospatiale, 316 Route de Bayonne, 31060 Toulouse, Cedex 03, France. Copies may be inspected at the FAA, Transport Airplane Directorate, 1601 Lind Avenue, SW., Renton, Washington; or at the Office of the Federal Register, 800 North Capitol Street, NW., suite 700, Washington, DC.

Note 6: The subject of this AD is addressed in French airworthiness directive 92–044–046(B)R2, dated November 5, 1997.

(k) This amendment becomes effective on April 26, 2000.

Issued in Renton, Washington, on March 9, 2000.

Donald L. Riggin,

Acting Manager, Transport Airplane Directorate, Aircraft Certification Service.

[FR Doc. 00–6328 Filed 3–22–00; 8:45 am]

BILLING CODE 4910–13–U

DEPARTMENT OF TRANSPORTATION

Federal Aviation Administration

14 CFR Part 39

[Docket No. 99–NM–347–AD; Amendment 39–11638; AD 2000–05–28]

RIN 2120–AA64

Airworthiness Directives; British Aerospace Model BAe 146 and Avro 146–RJ Series Airplanes

AGENCY: Federal Aviation Administration, DOT.

ACTION: Final rule.

SUMMARY: This amendment adopts a new airworthiness directive (AD), applicable to all British Aerospace Model BAe 146 and Avro 146–RJ series airplanes, that requires a one-time inspection to detect cracking or corrosion of the forward attachment bolts of the engine pylon to wing interface, and corrective action, if necessary. It also requires re-installation with re-protected and sealed bolts torqued to a lower level. This amendment is prompted by issuance of mandatory continuing airworthiness information by a foreign civil airworthiness authority. The actions specified by this AD are intended to detect and correct cracking or corrosion of the forward attachment bolts of the engine pylon to wing interface, which could result in reduced structural integrity of the engine pylon attachment.

DATES: Effective April 26, 2000.

The incorporation by reference of certain publications listed in the regulations is approved by the Director of the Federal Register as of April 26, 2000.

ADDRESSES: The service information referenced in this AD may be obtained from British Aerospace Regional Aircraft American Support, 13850 Mclearen Road, Herndon, Virginia 20171. This information may be examined at the Federal Aviation Administration (FAA), Transport Airplane Directorate, Rules Docket, 1601 Lind Avenue, SW., Renton, Washington; or at the Office of the Federal Register, 800 North Capitol Street, NW., suite 700, Washington, DC.

FOR FURTHER INFORMATION CONTACT: Norman B. Martenson, Manager, International Branch, ANM–116, FAA, Transport Airplane Directorate, 1601 Lind Avenue, SW., Renton, Washington 98055–4056; telephone (425) 227–2110; fax (425) 227–1149.

SUPPLEMENTARY INFORMATION: A proposal to amend part 39 of the Federal Aviation Regulations (14 CFR part 39) to include an airworthiness directive (AD) that is applicable to all British Aerospace Model BAe 146 and Avro 146–RJ series airplanes was published in the **Federal Register** on December 15, 1999 (64 FR 69967). That action proposed to require a one-time inspection to detect cracking or corrosion of the forward attachment bolts of the engine pylon to wing interface, and corrective action, if necessary. That action also proposed to require re-installation with re-protected and sealed bolts torqued to a lower level.

Comments Received

Interested persons have been afforded an opportunity to participate in the making of this amendment. Due consideration has been given to the comments received.

Request to Revise Cost Impact Information

One commenter, an operator, requests that the cost impact information in the proposed AD be increased from ''20 work hours (including removal and reinstallation of the engines)'' to 112 work hours. The commenter states that, as an experienced operator, it estimates the time necessary to remove and replace just one engine is approximately 8 to 10 work hours. The commenter suggests that an appropriate estimate for all actions required by the AD is approximately 112 work hours, including hours for removal and replacement of four engines and the pylon attachment bolts, as well as inspection of the bolts and removal of corrosion.

The FAA partially concurs. The estimate of 20 work hours provided in the AD was based on the estimate of work hours specified in British Aerospace Service Bulletin SB.54–10, dated September 16, 1999 (which was referenced in the proposed AD and cited in this final rule as the appropriate source of service information). However, the FAA has determined that such an estimate includes only the time required to accomplish the inspections required by this AD, and does not include the time necessary for removal and reinstallation of all four engines or the time for accomplishment of corrective actions if corrosion is found. The FAA has revised the cost impact information, below, by removing the parenthetical statement indicating that the 20 work hours includes engine removal and reinstallation. However, because the economic analysis of the AD is limited to the cost of actions actually required by the rule, it does not typically include the costs of ''indirect'' or ''on-condition'' actions, such as hours necessary for access and close, or for repairs. Therefore, no further change to the cost impact information is necessary.

Request for Alternative Method of Compliance

The same commenter requests that the proposed AD include a provision for the replacement of the pylon attachment bolts with new bolts as an alternative to performing the inspection. The commenter notes that such a provision is not specified in the referenced service bulletin or in the proposed AD, but states that this option should be available at the operator's discretion as an alternative method of compliance.

The FAA concurs. The FAA has reviewed the acceptability of the proposed alternative method of

compliance with the manufacturer and with the Civil Aviation Authority (CAA), which is the airworthiness authority for the United Kingdom. Based on that input, the FAA has determined that replacement of all pylon attachments bolts with new bolts is an acceptable alternative to performing the inspection required by this AD, provided that the installation methods specified in the service bulletin are followed. Such installation methods include retorquing the new bolts to a lower level, and applying sealant to the bolts. A new paragraph (b) has been added to the final rule to provide this alternative as an acceptable means of complying with the requirements of this AD.

Conclusion

After careful review of the available data, including the comments noted above, the FAA has determined that air safety and the public interest require the adoption of the rule with the changes described previously. The FAA has determined that these changes will neither increase the economic burden on any operator nor increase the scope of the AD.

Cost Impact

The FAA estimates that 35 airplanes of U.S. registry will be affected by this AD, that it will take approximately 20 work hours per airplane to accomplish the required inspection, and that the average labor rate is $60 per work hour. Based on these figures, the cost impact of the AD on U.S. operators is estimated to be $42,000, or $1,200 per airplane.

The cost impact figure discussed above is based on assumptions that no operator has yet accomplished any of the requirements of this AD action, and that no operator would accomplish those actions in the future if this AD were not adopted.

Regulatory Impact

The regulations adopted herein will not have a substantial direct effect on the States, on the relationship between the national Government and the States, or on the distribution of power and responsibilities among the various levels of government. Therefore, it is determined that this final rule does not have federalism implications under Executive Order 13132.

For the reasons discussed above, I certify that this action (1) is not a ''significant regulatory action'' under Executive Order 12866; (2) is not a ''significant rule'' under DOT Regulatory Policies and Procedures (44 FR 11034, February 26, 1979); and (3) will not have a significant economic impact, positive or negative, on a substantial number of small entities under the criteria of the Regulatory Flexibility Act. A final evaluation has been prepared for this action and it is contained in the Rules Docket. A copy of it may be obtained from the Rules Docket at the location provided under the caption ADDRESSES.

List of Subjects in 14 CFR Part 39

Air transportation, Aircraft, Aviation safety, Incorporation by reference, Safety.

Adoption of the Amendment

Accordingly, pursuant to the authority delegated to me by the Administrator, the Federal Aviation Administration amends part 39 of the Federal Aviation Regulations (14 CFR part 39) as follows:

PART 39—AIRWORTHINESS DIRECTIVES

1. The authority citation for part 39 continues to read as follows:

Authority: 49 U.S.C. 106(g), 40113, 44701.

§ 39.13 [Amended]

2. Section 39.13 is amended by adding the following new airworthiness directive:

2000–05–28 British Aerospace Regional Aircraft (Formerly British Aerospace Regional Aircraft Limited, Avro International Aerospace Division; British Aerospace, PLC; British Aerospace Commercial Aircraft Limited): Amendment 39–11638. Docket 99–NM–347–AD.

Applicability: All Model BAe 146 and Avro 146–RJ series airplanes, certificated in any category.

Note 1: This AD applies to each airplane identified in the preceding applicability provision, regardless of whether it has been modified, altered, or repaired in the area subject to the requirements of this AD. For airplanes that have been modified, altered, or repaired so that the performance of the requirements of this AD is affected, the owner/operator must request approval for an alternative method of compliance in accordance with paragraph (c) of this AD. The request should include an assessment of the effect of the modification, alteration, or repair on the unsafe condition addressed by this AD; and, if the unsafe condition has not been eliminated, the request should include specific proposed actions to address it.

Compliance: Required as indicated, unless accomplished previously.

To detect and correct cracking or corrosion of the forward attachment bolts of the engine pylon to wing interface, which could result in reduced structural integrity of the engine pylon attachment, accomplish the following:

Inspection and Corrective Action

(a) Within 4 years since date of manufacture, or within 2,000 flight cycles after the effective date of this AD, whichever occurs later: Except as provided by paragraph (b) of this AD, perform applicable inspections (dye penetrant, magnetic particle, and detailed visual) to detect discrepancies (including damage, cracking, and corrosion) of the forward attachment bolts of the engine pylon to wing interface on each engine, in accordance with British Aerospace Service Bulletin SB.54–10, dated September 16, 1999. If any discrepancy is detected, prior to further flight, perform applicable corrective actions in accordance with the service bulletin.

Note 2: For the purposes of this AD, a detailed visual inspection is defined as: ''An intensive visual examination of a specific structural area, system, installation, or assembly to detect damage, failure, or irregularity. Available lighting is normally supplemented with a direct source of good lighting at intensity deemed appropriate by the inspector. Inspection aids such as mirror, magnifying lenses, etc., may be used. Surface cleaning and elaborate access procedures may be required.''

(b) Replacement of all bolts with new bolts in accordance with British Aerospace Service Bulletin SB.54–10, dated September 16, 1999, within the compliance time specified in paragraph (a) of this AD, is an acceptable alternative for compliance with the requirements of paragraph (a), provided all installation methods (including retorquing the bolts at a lower level, and applying sealant to the bolts) specified in the service bulletin are followed.

Alternative Methods of Compliance

(c) An alternative method of compliance or adjustment of the compliance time that provides an acceptable level of safety may be used if approved by the Manager, International Branch, ANM–116, FAA, Transport Airplane Directorate. Operators shall submit their requests through an appropriate FAA Principal Maintenance Inspector, who may add comments and then send it to the Manager, International Branch, ANM–116.

Note 3: Information concerning the existence of approved alternative methods of compliance with this AD, if any, may be obtained from the International Branch, ANM–116.

Special Flight Permits

(d) Special flight permits may be issued in accordance with §§ 21.197 and 21.199 of the Federal Aviation Regulations (14 CFR 21.197 and 21.199)

to operate the airplane to a location where the requirements of this AD can be accomplished.

Incorporation by Reference

(e) The actions shall be done in accordance with British Aerospace Service Bulletin SB.54–10, dated September 16, 1999. This incorporation by reference was approved by the Director of the Federal Register in accordance with 5 U.S.C. 552(a) and 1 CFR part 51. Copies may be obtained from British Aerospace Regional Aircraft American Support, 13850 Mclearen Road, Herndon, Virginia 20171. Copies may be inspected at the FAA, Transport Airplane Directorate, 1601 Lind Avenue, SW., Renton, Washington; or at the Office of the Federal Register, 800 North Capitol Street, NW., suite 700, Washington, DC.

Note 4: The subject of this AD is addressed in British airworthiness directive 006–09–99.

(f) This amendment becomes effective on April 26, 2000.

Issued in Renton, Washington, on March 9, 2000.

Franklin Tiangsing,

Acting Manager, Transport Airplane Directorate, Aircraft Certification Service.

[FR Doc. 00–6330 Filed 3–21–00; 8:45 am]

BILLING CODE 4910–13–P

DEPARTMENT OF TRANSPORTATION

Federal Aviation Administration

14 CFR Part 39

[Docket No. 97–CE–114–AD; Amendment 39–11641; AD 2000–06–01]

RIN 2120–AA64

Airworthiness Directives; Cessna Aircraft Company 150, 152, 172, 177, 180, 182, 185, 188, 206, 207, 210, and 337 Series Airplanes

AGENCY: Federal Aviation Administration, DOT.

ACTION: Final rule.

SUMMARY: This amendment adopts a new airworthiness directive (AD) that applies to Cessna Aircraft Company (Cessna) 150, 152, 172, 177, 180, 182, 185, 188, 206, 207, 210, and 337 series airplanes. This AD requires measuring the visible length of standpipe (tube) in the top assembly of the fuel strainer assembly for the correct length, and replacing any fuel strainer assembly that does not have the correct length of standpipe. This AD is the result of reports that the fuel strainer assemblies on the affected airplanes were manufactured with the fuel standpipes incorrectly installed in the assembly housing top. The actions specified by this AD are intended to prevent foreign material from entering the fuel system and engine, which could result in loss of engine power or complete engine stoppage during flight.

DATES: Effective May 5, 2000.

The incorporation by reference of certain publications listed in the regulations is approved by the Director of the **Federal Register** as of May 5, 2000.

ADDRESSES: Service information that applies to this AD may be obtained from the Cessna Aircraft Company, P.O. Box 7706, Wichita, Kansas 67277; telephone: (316) 941–7550; facsimile: (316) 942–9008. This information may also be examined at the Federal Aviation Administration (FAA), Central Region, Office of the Regional Counsel, Attention: Rules Docket No. 97–CE–114–AD, Room 506, 901 Locust, Kansas City, Missouri 64106; or at the Office of the **Federal Register**, 800 North Capitol Street, NW, suite 700, Washington, DC.

FOR FURTHER INFORMATION CONTACT: Paul O. Pendleton, Aerospace Engineer, FAA, Wichita Aircraft Certification Office, 1801 Airport Road, Room 100, Wichita, Kansas 67209; telephone: (316) 946–4143; facsimile: (316) 946–4407.

SUPPLEMENTARY INFORMATION:

Events Leading to the Issuance of This AD

A proposal to amend part 39 of the Federal Aviation Regulations (14 CFR part 39) to include an AD that would apply to Cessna 150, 152, 172, 177, 180, 182, 185, 188, 206, 207, 210, and 337 series airplanes was published in the **Federal Register** as a notice of proposed rulemaking (NPRM) on July 22, 1998 (63 FR 39244). The NPRM proposed to require measuring the fuel strainer assembly standpipe, and replacing any fuel strainer assembly that does not have a standpipe of the correct measurement. Accomplishment of the proposed action as specified in the NPRM would be required in accordance with Cessna Service Bulletins SEB97–9, dated November 17, 1997, and MEB97–12, dated November 17, 1997.

The NPRM was the result of reports that the fuel strainer assemblies on the affected airplanes were manufactured with the fuel standpipes incorrectly installed in the assembly housing top.

Interested persons have been afforded an opportunity to participate in the making of this amendment. Due consideration has been given to the comments received from six different entities.

Comment Disposition

All six commenters request that the FAA include a provision for the owners/operators of the affected airplanes to check the logbook to determine whether one of the affected fuel strainer assemblies is installed. This would reduce the impact of the AD by not requiring operators who do not have the affected fuel strainer assemblies installed to have their airplanes unnecessarily inspected.

The FAA concurs. Cessna part number (P/N) 0756005-2 top assemblies, Cessna P/N 0756005–8 fuel strainer assemblies, or Cessna P/N 0756005–9 fuel strainer assemblies, that were shipped between December 12, 1996, and September 5, 1997, may have been manufactured with an internal tube installed to a depth less than specified. These parts may become loose and dislodge from the strainer top assembly. If the owner/operator can make the determination by checking the logbooks that one of these parts is not installed or was installed prior to December 12, 1996, the measurement and possible replacement requirements of paragraphs (a) and (b) of this AD would not apply and the owner/operator must make an entry into the aircraft records showing compliance with this portion of the AD in accordance with section 43.9 of the Federal Aviation Regulations (14 CFR 43.9). This final rule has been changed to reflect this provision.

The FAA's Determination

After careful review of all available information related to the subject presented above including the comments discussed, the FAA has determined that air safety and the public interest require the adoption of the rule as proposed except for the addition of the provision to check the logbooks and minor editorial corrections. The FAA has determined that this addition and the minor corrections will not change the meaning of the AD and will not add any additional burden upon the public than was already proposed.

Cost Impact

The FAA estimates that 50,000 airplanes in the U.S. registry will be affected by this AD.

The measurement required by this AD is estimated to take 1 workhour per airplane with the average labor rate at approximately $60 an hour. The total cost impact to accomplish the inspection will be $3,000,000 for the U.S. fleet, or $60 per airplane.

The replacement of the fuel strainer assembly is estimated to take 2

workhours per airplane with an average labor rate of approximately $60 per hour. Approximately 300 of the affected parts are thought to have been manufactured. The cost of parts is approximately $180 per airplane. Therefore, based on these figures, the total cost impact to accomplish the replacement, if applicable, on U.S. operators is estimated to be $90,000, or $300 per airplane.

Regulatory Impact

The regulations adopted herein will not have a substantial direct effect on the States, on the relationship between the national government and the States, or on the distribution of power and responsibilities among the various levels of government. Therefore, it is determined that this final rule does not have federalism implications under Executive Order 13132.

For the reasons discussed above, I certify that this action (1) is not a ''significant regulatory action'' under Executive Order 12866; (2) is not a ''significant rule'' under DOT Regulatory Policies and Procedures (44 FR 11034, February 26, 1979); and (3) will not have a significant economic impact, positive or negative, on a substantial number of small entities under the criteria of the Regulatory Flexibility Act. A copy of the final evaluation prepared for this action is contained in the Rules Docket. A copy of it may be obtained by contacting the Rules Docket at the location provided under the caption **ADDRESSES**.

List of Subjects in 14 CFR Part 39

Air transportation, Aircraft, Aviation safety, Incorporation by reference, Safety.

Adoption of the Amendment

Accordingly, pursuant to the authority delegated to me by the Administrator, the Federal Aviation Administration amends part 39 of the Federal Aviation Regulations (14 CFR part 39) as follows:

PART 39—AIRWORTHINESS DIRECTIVES

1. The authority citation for part 39 continues to read as follows:

Authority: 49 U.S.C. 106(g), 40113, 44701.

§ 39.13 [Amended]

2. Section 39.13 is amended by adding a new airworthiness directive (AD) to read as follows:

2000–06–01 Cessna Aircraft Company: Amendment 39–11641; Docket No. 97–CE–114–AD.

Applicability: All serial numbers of the following airplane models, certificated in any category, including those manufactured in France that have a capital ''F'' or ''FR'' prefix on the model number: Models 150F, 150G, 150H, 150J, 150K, 150L, 150M, A150K, A150L, A150M, A–150L, A–A150L, F150F, F150G, F150H, F150J, F150K, F150L, F150M, FA150K, FA150L, FA150M, FRA150L, FRA150M, 152, A152, F152, FA152, 172F, 172G, 172H, 172I, 172K, 172L, 172M, 172N, 172P, 172Q, R172E (T41), R172F (T41), R172G (T41), R172H (T41), R172J, R172K, 172RG, F172F, F172G, F172H, F172K, F172L, F172M, F172N, F172P, FR172E, FR172F, FR172G, FR172H, FR172J, FR172K, 177, 177A, 177B, 177RG, F177RG, 180H, 180J, 180K, 182H, 182J, 182K, 182L, 182M, 182N, 182P, 182Q, 182R/T182, 182R, R182, R182/TR182, A182J, A182K, A182L, A182N, F182P, F182Q, FR182, 185D, 185E, A185E, A185F, 188, A188, 188A, A188A, 188B, A188B, T188C, A–A188B, U206, U206A, TU206A, U206B/TU206B, U206C/TU206C, U206D/TU206D, U206E/TU206E, U206F/TU206F, U206G/TU206G, P206, P206A, TP206A, P206B/TP206B, P206C/TP206C, P206D/TP206D, P206E/TP206E, 207/T207, 207A/T207A, 210E, 210F, 210G, 210H, 210J, 210K/T210K, 210L/T210L, 210M/T210M, 210N/T210N, T210F, T210G, T210H, T210J, P210N, 337, 337A, 337B/T337B, M337B, 337C/T337C, 337D/T337D, 337E/T337E, 337F, T337F, 337G, 337H/T337H, T337H–SP, T337G, P337H, F337E/FT337E, F337F/FT337F, F337G, F337H, FTB337, FT337GP, and FT337HP.

Note 1: This AD applies to each airplane identified in the preceding applicability provision, regardless of whether it has been modified, altered, or repaired in the area subject to the requirements of this AD. For airplanes that have been modified, altered, or repaired so that the performance of the requirements of this AD is affected, the owner/operator must request approval for an alternative method of compliance in accordance with paragraph (f) of this AD. The request should include an assessment of the effect of the modification, alteration, or repair on the unsafe condition addressed by this AD; and, if the unsafe condition has not been eliminated, the request should include specific proposed actions to address it.

Compliance: Required as indicated in the body of this AD.

To prevent foreign material from entering the fuel system and engine, which could result in loss of engine power or complete engine stoppage during flight, accomplish the following:

Note 2: This AD allows the aircraft owner or pilot to check the maintenance records to determine whether a Cessna part number (P/N) 0756005–2 top assembly, Cessna P/N 0756005–8 fuel strainer assembly, or a Cessna P/N 0756005–9 fuel strainer assembly was installed after December 12, 1996. Those parts that were shipped between December 12, 1996, and September 5, 1997, may have been manufactured with an internal tube installed to a depth less than specified and may become loose and dislodge from the strainer top assembly. See paragraph (c) of this AD for authorization.

(a) Within the next 12 calendar months after the effective date of this AD, unless already accomplished, measure the standpipe in the fuel strainer assembly (tube in the filter strainer top assembly) for a visible maximum length of 1.68 inches, in accordance with the ACCOMPLISHMENT INSTRUCTIONS section and Detail A in Cessna Single Engine Service Bulletin (SB) No. SEB97–9, dated November 17, 1997; or Cessna Multi-engine SB No. MEB97–12, dated November 17, 1997, whichever is applicable.

(b) If the standpipe does not measure a maximum length of 1.68 inches, prior to further flight, replace the filter strainer top assembly in accordance with the ACCOMPLISHMENT INSTRUCTIONS section in Cessna Single Engine SB No. SEB97–9, dated November 17, 1997; or Cessna Multi-engine SB No. MEB97–12, dated November 17, 1997, whichever is applicable.

(c) The owner/operator holding at least a private pilot certificate as authorized by section 43.7 of the Federal Aviation Regulations (14 CFR 43.7) may check the maintenance records to determine whether a Cessna part number (P/N) 0756005–2 top assembly, Cessna P/N 0756005–8 fuel strainer assembly, or a Cessna P/N 0756005–9 fuel strainer assembly was installed after December 12, 1996. Those parts that were shipped between December 12, 1996, and September 5, 1997, may have been manufactured with an internal tube installed to a depth less than specified and may become loose and dislodge from the strainer top assembly. If, by checking the maintenance records, the owner/operator can make an absolute determination that one of these parts is not installed or was installed prior to December 12, 1996, the requirements of paragraphs (a) and (b) of this AD do not apply. The owner/operator must make an entry into the aircraft records showing compliance with this portion of the AD in accordance with section 43.9 of the Federal Aviation Regulations (14 CFR 43.9).

(d) As of the effective date of this AD, no person may install, on any of the affected Cessna airplanes, a fuel filter assembly where the maximum length of the standpipe does not measure 1.68 inches.

(e) Special flight permits may be issued in accordance with sections 21.197 and 21.199 of the Federal Aviation Regulations (14 CFR 21.197 and 21.199) to operate the airplane to a location where the requirements of this AD can be accomplished.

(f) An alternative method of compliance or adjustment of the compliance time that provides an equivalent level of safety may be approved by the Manager, FAA, Wichita Aircraft Certification Office (ACO), 1801 Airport Road, Room 100, Wichita, Kansas 67209. The request shall be forwarded through an appropriate FAA Maintenance Inspector, who may add comments and then send it to the Manager, Wichita ACO.

Note 3: Information concerning the existence of approved alternative methods of compliance with this

AD, if any, may be obtained from the Wichita ACO.

(g) The measurement and replacement required by this AD shall be done in

accordance with Cessna Single Engine Service Bulletin (SB) No. SEB97–9, dated November 17, 1997, or Cessna Multi-engine SB No. MEB97–12, dated November 17, 1997. This incorporation by reference was approved by the Director of the Federal Register in accordance with 5 U.S.C. 552(a) and 1 CFR part 51. Copies may be obtained from the Cessna Aircraft Company, P. O. Box 7706, Wichita, Kansas 67277. Copies may be inspected at the FAA, Central Region, Office of the Regional Counsel, Room 506, 901 Locust, Kansas City, Missouri, or at the Office of the Federal Register, 800 North Capitol Street, NW, suite 700, Washington, DC.

(h) This amendment becomes effective on May 5, 2000.

Issued in Kansas City, Missouri, on March 10, 2000.

Michael Gallagher,

Manager, Small Airplane Directorate, Aircraft Certification Service.

[FR Doc. 00–6615 Filed 3–21–00; 8:45 am]

BILLING CODE 4910–13–P

DEPARTMENT OF ENERGY

Federal Energy Regulatory Commission

18 CFR Parts 157 and 380

[Docket No. RM98–17–001; Order No. 609–A]

Landowner Notification, Expanded Categorical Exclusions, and Other Environmental Filing Requirements

Issued March 16, 2000.

AGENCY: Federal Energy Regulatory Commission.

ACTION: Final Rule; Order on Rehearing.

SUMMARY: On rehearing the Federal Energy Regulatory Commission (Commission) reaffirms its basic determinations in Order 609 and modifies and clarifies certain aspects of the Final Rule. Order 609 added certain early landowner notification requirements to its regulations under the Natural Gas Act (NGA) that will ensure that landowners who may be affected by a pipeline's proposal to construct natural gas pipeline facilities have sufficient opportunity to participate in the Commission's certificate process. The Final Rule also amended certain areas of its regulations to provide pipelines with greater flexibility and to further expedite the certificate process, including: expanding the list of activities categorically excluded from the need for an Environmental Assessment under the Commission's regulations; expanding the types of events that allow pipelines to rearrange facilities under their blanket construction certificates; and adding certain other environmental requirements.

DATES: The revisions to the regulations in this order on rehearing become effective April 21, 2000.

ADDRESSES: Federal Energy Regulatory Commission, 888 First Street, N.E., Washington, D.C. 20426.

FOR FURTHER INFORMATION CONTACT:

John S. Leiss, Office of Energy Projects, Federal Energy Regulatory Commission, 888 First Street, N.E., Washington, DC 20426, (202) 208–1106

Carolyn Van Der Jagt, Office of the General Counsel, Federal Energy Regulatory Commission, 888 First Street, NE, Washington, DC 20426, (202) 208–2246.

SUPPLEMENTARY INFORMATION:

I. Introduction

In this order the Federal Energy Regulatory Commission (Commission) is modifying and clarifying certain aspects of the Final Rule issued in Order No. 609.[1] Generally, this order: (1) Requires that the Commission's notice of application and information on how to intervene be included in the notification to affected landowners; (2) Expands the definition of ''affected landowner'' to include owners of residences within 50 feet of the proposed construction work area; (3) Clarifies the requirements for the newspaper notice; (4) Explains how the notice requirement pertains to storage fields; (5) Denies a request to eliminate the requirement to provide an explanation of state eminent domain laws; (6) Allows a waiver of the 30-day notice requirement for blanket activities when the landowner agrees to the waiver and/or when the landowner requests the service/facility; (7) Requires no notification for non-ground disturbing projects; and (8) Clarifies that new injection/withdrawal wells cannot be constructed under § 2.55 of the Commission's regulations or under a pipeline's blanket certificate authorization.

II. Background

On October 13, 1999, the Commission issued a Final Rule in Order No. 609. The Final Rule: (1) Provided for earlier and more informed landowner involvement in natural gas projects; (2) Streamlined the regulation process by categorically excluding certain types of activities from the need to have an Environmental Assessment prepared for them; and (3) Updated the environmental requirements for projects under the Natural Gas Act (NGA).

The Commission received rehearing/clarification requests from three parties including Columbia Gas Transmission Corporation (Columbia), Interstate Natural Gas Association of America (INGAA), and Williston Basin Interstate Pipeline Company (Williston Basin). Travis Kenneth Bynum filed a ''Motion to Deny Rehearing,'' alleging that the motions of the other parties failed to establish error on the part of the Commission. We address each of the requests for rehearing/clarification below, granting or denying them as discussed herein.

III. Discussion

A. Landowner Notification

In the Final Rule, the Commission required in § 157.6(d) that all applicants seeking authorization under Part 157 of the Commission's regulations notify all affected landowners of record, as indicated in the most recent tax rolls, of their application by certified or first class mail (or by hand) within three (3) business days following the date a docket number is assigned to the filed application.

1. Notification of Intervention Deadline

The intent of the Commission in implementing § 157.6(d) was to ensure that landowners who may be affected by a pipeline's proposal to construct natural gas pipeline facilities have sufficient opportunity to participate in the Commission's certificate process. In the Final Rule, we required that the notice mailed by applicants to affected landowners include, among other information: (1) The docket number of the filing; (2) The most recent edition of the Commission's pamphlet explaining the Commission's certificate process; and (3) A brief summary of what rights the landowner has at FERC. However, we did not require that the notice include the deadline for interested parties to file timely requests to intervene in the Commission's proceedings on the application.

The reason for that omission is that § 157.6(d) requires notice to be sent within three business days of the date a docket number is assigned to the filed application, whereas the Commission's notice establishing the intervention deadline may not be issued for up to ten days after the date the application is filed. Currently, the Commission's notice is published in the **Federal Register** and is available to the public electronically on the Commission's Internet web site, but is not sent directly

[1] Landowner Notification, Expanded Categorical Exclusions, and Other Environmental Filing Requirements, Order No. 609, 64 FR 57374, (Oct. 25,1999), FERC Stats. and Regs. ¶31,082 (Oct. 13, 1999).

to any party. Thus, after receiving notice of an application from the applicant, affected landowners will generally know *how* to get involved in the proceedings before the Commission, but will not know, without further effort on their part, by *when* they must act to do so in a timely manner. Further, while the Commission has, and will continue to liberally exercise its discretion in granting late-intervenor status to requesting landowners and other interested parties, many landowners resent having to request what they see as special permission to participate. [2]

To rectify this situation, we will modify the requirements of § 157.6(d)(3) to require that the notice mailed to affected landowners include a copy of the Commission's notice of the application, specifically stating the date by which timely motions to intervene are due, together with the Commission's information sheet on how to intervene in Commission proceedings. This sheet is available on the Commission's Internet Website at *http://www.ferc.fed.us/public/intervene.htm.* To make the inclusion of these documents possible, we will also modify § 157.6(1)(i) to require that the notice be sent within three days of the date the Commission notice is issued, rather than the date a docket number is assigned. Finally, we will require that the notice be mailed not only to affected landowners, but also to all towns, communities, and local, state and federal government agencies involved in the project. This expanded mailing list corresponds to those entities generally receiving the Commission's Notice of Intent to prepare an environmental assessment of a project.

2. Affected Landowners

Section 157.6(d)(2)(ii) defines ''affected landowner'' to include owners whose property ''abuts either side of an existing right-of-way or facility site owned in fee by any utility company, or abuts the edge of a proposed right-of-way which runs along a property line in the area in which the facilities would be constructed.'' However, there may be instances where there is a residence in close proximity to the proposed right-of-way, but located on a parcel of land which does not abut the proposed right-of-way. Such property owners would clearly be affected by the proposed construction, but would not receive direct notification of the proposal under the requirement as stated above. Therefore, we will modify § 157.6(d)(2)(ii) to include owners of residences within 50 feet of the proposed construction work area.

3. Newspaper Notification

Section 157.6(d)(1)(iii) requires that the applicant include a notice of the project in a newspaper(s) of general circulation in the project area within a week of the filing. Pursuant to the provisions of § 157.6(d)(3), this notice must include: (1) The docket number of the filing; (2) A description of the applicant and the proposed project, the project's location (including a map), its purpose, and proposed timing; (3) A general description of what the pipeline will need from the landowner if the project is approved; (4) How to contact the applicant for further information; (5) A brief summary of what rights a person has at the Commission and their rights under the eminent domain rules in the relevant state; and (6) Information on how to get a copy of the application from the applicant or where copies of the application may be located for public review.

Comment

On rehearing, INGAA states that as the regulation is currently written, the entire list of items that must be included in the landowner notification letter also must be included in the newspaper notification. INGAA asserts that this is a substantial amount of information to be printed in the newspaper. It suggests that the newspaper notice should only include the fact that an application has been filed at the Commission, the docket number, a general description of the route of the project, identification of a company contact person, and where copies of the application may be accessed. It also suggests that the newspaper notice only identify the other items that are listed in § 157.6(d)(3) and allow the reader to contact the applicant if they wish more detailed information. It says this would avoid the lengthier and costlier newspaper notice that is currently required.

Commission Response

Generally, INGAA's suggestion includes most of the items required for the landowner notice. The items INGAA proposes be omitted from the published notice include (1) A description of the company, (2) The project's purpose and timing, (3) A general description of what will be needed from landowners if the project is approved, (4) A general location map, and (5) A summary of the landowner's rights at the Commission and in eminent domain proceedings.

First, we note that items (1), (2), and (3) should not involve a substantial amount of text and are basic to the purpose of the notification. Accordingly, that information should be printed in the newspaper to ensure the public can quickly judge whether or not the project is of interest to them. Similarly, including a general location map complements the project description and has the advantage of reducing inquiries from people who might otherwise be unsure of their physical relationship to the project's location. Therefore, those items should continue to be part of the newspaper notification.

However, we find that at least a portion of (5) may be unnecessary for the published newspaper notice. While affected landowners, as defined by the regulations, have a need for basic information regarding eminent domain, the general public may not, since there is little chance that persons not meeting the regulation's definition of ''affected landowner'' will be subject to condemnation. In addition, we believe that publishing the Commission's Internet Website address and the telephone number for the Commission's Office of External Affairs will provide sufficient information to enable those members of the general public who desire to become involved in the Commission's proceeding to do so. We will modify § 157.6(d)(3)(v) accordingly. We will also modify § 157.6(d)(3)(ii) to clarify that while pipelines are not required to include the Commission's pamphlet in the published notice, they should provide the title of the pamphlet and indicate its availability at the Commission's Internet address.

Finally, we note that the regulations are silent as to the length of time the notice needs to be published in the newspaper. We will clarify that the newspaper notice must be published twice in a daily or weekly newspaper of general circulation in each county in which the project is located. This is consistent with the Commission's regulations under the Federal Power Act in § 4.32(b)(6) of the Commission's regulations. We will modify § 157.6(d)(1)(iii) accordingly.

4. Storage Fields

As adopted in the Final Rule, § 157.6(d)(2)(iv) defines affected landowners subject to the notice requirement as landowners whose land is ''within the area of new storage fields or expansions of storage fields, including any applicable buffer zone.''

[2] We note that pursuant to § 380.10 of the Commission's regulations, interested persons may have subsequent opportunities to file timely interventions on environmental issues.

Comment

INGAA and Williston Basin contend that the discussion of this section in the Final Rule is unclear and may imply a broader notification requirement than is intended in the codified § 157.6(d)(2)(iv). They request that the Commission clarify that pipelines are only required to notify surface and subsurface owners when proposing to develop and operate new storage fields or when expanding the boundaries of existing storage fields. They assert that storage fields encompass thousands of acres and have potentially hundreds of surface and subsurface property owners and that it would be burdensome and costly to notify all property interest owners within the entire certificated storage boundaries when a pipeline is replacing facilities under its blanket authority. Columbia makes a similar argument.

Commission Response

Under § 157.6(d)(2)(iv), if a new storage field is proposed, all owners of surface and subsurface property within the boundaries of the field and its buffer zone need to be notified of the project. If an existing storage field is proposed for expansion, all the surface and subsurface owners of property within the area between the existing certificate boundary and the proposed new certificate boundary of the field and its buffer zone need to be notified. If new facilities are being added within the existing certificate boundaries of an existing storage field and there is no change to the certificated boundaries, then § 157.6(d)(2)(iv) does not apply. However, in the latter case, §§ 157.6(d)(2)(i) through (ii) would apply.

5. Eminent Domain Proceedings and Landowner Rights

In the Final Rule, § 157.6(d)(3)(v) requires the notice to include a description of the rights a landowner has in proceedings at the Commission and in eminent domain proceedings in state court.

Comments

INGAA states that the requirement to summarize state eminent domain laws is unreasonable. Specifically, INGAA contends that this notice requirement could result in landowners claiming that they have been given legal advice. INGAA claims that pipelines should not be required to provide any legal opinion as to what a landowner's rights are under the eminent domain rules of the state because any omissions or mistaken statements could expose the pipeline to unnecessary litigation. INGAA requests that the Commission eliminate this requirement. In the alternative, INGAA requests that the Commission clarify that a pipeline will have sufficiently complied with this section if it cites the state statutes, as of the date of the filing of the application, related to eminent domain.

Further, INGAA requests that the Commission clarify that since the Commission's pamphlet explains a landowner's rights at the Commission, § 157.6(d)(3)(v) is satisfied by the applicant's providing the Commission's pamphlet. It asserts that requiring the pipeline to separately summarize a landowner's rights at the Commission would be duplicative and may cause confusion if the pipeline's phrasing is different from the pamphlet's phrasing.

Commission Response

We believe that the applicant should provide landowners with some basic information concerning what is involved in the eminent domain process. The general public is probably not greatly informed on these matters and may need to invest significant time and money just to get a basic understanding. We do not believe that providing this information would put the applicant at risk for unnecessary litigation, especially if the applicant prefaces its explanation with a disclaimer statement.

Guardian Pipeline's (Guardian) Landowner Rights summary, filed in Docket No. CP00–36–000 and provided to affected landowners in that proceeding (and also posted on its Internet Website at www.guardianpipeline.com), is a good example of what the Commission expects the applicant to provide to the landowners. It starts with a disclaimer statement and recommends that if the individual has any questions about their rights, they should seek the advice of an attorney. Next, it refers to the Commission's pamphlet and gives a short summary of the landowners' rights at the Commission. After this summary, it refers readers to the Commission's Office of External Affairs for further information. It then briefly summarizes the pipeline's general right to eminent domain and summarizes the eminent domain laws in Wisconsin and Illinois. Finally, it refers readers to the Wisconsin Department of Commerce and the Illinois Attorney General, respectively, for further information on the individual state laws. We believe this format meets the requirements of our regulations without subjecting the applicant to any legal liability.

6. Blanket Projects.

In the Final Rule, § 157.203(d)(1) requires that the pipeline notify any affected landowner of a project which is automatically approved under the blanket certificate program of Subpart F of Part 157 of the Commission's regulations. The notification must be provided at least 30 days prior to the beginning of construction activities or at the time easement negotiations begin, whichever is earlier.

Comments

INGAA and Williston Basin request that the Commission allow landowners to waive the 30-day notice period when the landowner is provided notification of a proposed project. They contend that if the landowner agrees to waive the 30-day notice period the pipeline should be able to proceed with construction without the Commission requiring approval of the waiver from the Director of the Office of Energy Projects.

INGAA also requests that the Commission clarify that landowner notice is not required for minor blanket projects that do not impact a landowner's property. This would include projects that are completely within the boundaries of an existing facility site or building, do not result in ground disturbance or, in the case of compression, do not increase air or noise emissions.

Additionally, Williston Basin argues that no notification should be required for blanket activities involving construction within existing rights-of-way pursuant to existing easements. It asserts that the landowner has already given an easement and as long as the pipeline's use is consistent with that easement there is no reason for the landowner to be notified that the pipeline is performing activities allowed by that easement. Further, it claims that it is inconsistent for the Commission to treat identical facilities installed under § 157.211 (*e.g.,* farm taps) and § 2.55(b) differently. It argues that activities performed under the two provisions have similar effects on landowners.

Commission Response

First, we agree that the landowners should be allowed to specifically waive the 30-day notice period in writing, as long as they are provided the notice. We have modified § 157.203(d)(1) accordingly. We note that on January 5, 2000, Reliant Energy Gas Transmission Company (Reliant) filed an application in Docket No. CP00–66–000 seeking a general waiver of the 30-day notice requirement when the construction has been requested by the landowner, only

that landowner's property will be affected by the construction, and the landowner has waived the 30-day period. We believe that there is no need to require any landowner notification in this circumstance. Therefore, we are providing an exception in § 157.6(d)(3)(iii) which makes notification unnecessary under these circumstances. This action will moot Reliant's request and we will issue a separate order dismissing that proceeding.

With respect to minor, non-ground disturbing projects, we agree that no landowner notification is required as long as projects do not materially change the appearance of the site. We have modified § 157.203(d)(3)(iv) accordingly.

Finally, as stated in Order No. 609, the Commission wants the opportunity to hear and act on landowners' concerns when the pipeline conducts an activity subject to the Commission's jurisdiction. Facilities constructed under § 2.55 are exempt from the Commission's jurisdiction, whereas activities performed under the pipelines' blanket certificates are subject to the Commission's jurisdiction. Further, facilities which may be constructed under §§ 157.211 or 157.208 are different from those constructed under § 2.55. In the latter case, an existing facility is being replaced by the same kind of facility, in the same location, entirely within an existing easement. Facilities constructed under blanket authority (either under § 157.211 or § 157.208) are usually at least partially outside of existing easements and are new. It is appropriate for the landowner to receive advance notice of such construction, even when it is anticipated by the existing easement. A signed easement agreement does not limit the right of a landowner to express concerns regarding additional uses of the land to the Commission, or to the company itself. The notice provides the landowner the opportunity to contact the pipeline or the Commission and to express such concerns.

7. Prior Notice Projects

In the Final Rule, § 157.203(d)(2) requires that the pipeline notify any affected landowner within three days of making the prior notice filing or at the time easement negotiations begin, whichever is earlier.

Comment

INGAA requests that the Commission revise this section to require notification ''within 3 business days following the date that a docket number is assigned to the application or at the time the pipeline initiates easement negotiations, whichever is earlier'', to be consistent with the case-specific requirement.

Commission Response

We agree and have modified § 157.203(d)(2) accordingly.

B. Observation Wells

In the Final Rule, the Commission stated that observation wells can be constructed under § 2.55 of the Commission's regulations. The Final Rule also clarified that replacement wells can be constructed under § 2.55(b) if the wells fit the requirements of that section.

Comment

On rehearing, INGAA and Williston Basin request that the Commission clarify that the restrictions in § 2.55 that require that the replacement facilities be ''in the same right-of-way or on the same site'' do not apply to replacement wells. They contend that replacement wells are usually in close proximity, but are generally not in the same exact location, as the original facility. Accordingly, they request that the Commission either clarify that the site restrictions in § 2.55(b)(1)(ii) are not applicable to replacement wells or that replacements wells that do not qualify under § 2.55(b) because of the site restriction can be drilled under the pipeline's blanket certificate as long as those wells do not alter the certificated deliverability, capacity, or boundary of the field.

Commission Response

It was the Commission's intent that only replacement facilities which are in the same right-of-way or on the same site as the original facilities be constructed under § 2.55(b). Therefore, we cannot clarify the provision as proposed by the commenters. Moreover, as stated in Order Nos. 603–A, 603–B, and 609, the Commission does not believe that blanket certificate authorization provides adequate oversight of the construction of new injection/withdrawal wells, including those intended to replace existing wells, but constructed at a different site. Despite the fact that they are only intended to replace existing facilities, such wells may inherently alter the daily or seasonal deliverability, volumetric capacity, or boundary of a storage reservoir. Accordingly, separate NGA section 7(c) authorization is necessary prior to the drilling of replacement injection/withdrawal wells that are not on the site of the original facilities.

C. Other Clarifications

Finally, we have made a few typographical corrections to the minimum filing requirements in Appendix A to Part 380.

IV. Document Availability

In addition to publishing the full text of this document in the **Federal Register**, the Commission provides all interested persons an opportunity to view and/or print the contents of this document via the Internet through FERC's Home Page (*http://www.ferc.fed.us*) and in FERC's Public Reference Room during normal business hours (8:30 a.m. to 5:00 p.m. Eastern time) at 888 First Street, N.E., Room 2A, Washington, DC 20426.

From FERC's Home Page on the Internet, this information is available in both the Commission Issuance Posting System (CIPS) and the Records and Information Management System (RIMS).

—CIPS provides access to the texts of formal documents issued by the Commission since November 14, 1994.

—CIPS can be accessed using the CIPS link or the Energy Information Online icon. The full text of this document is available on CIPS in ASCII and WordPerfect 8.0 format for viewing, printing, and/or downloading.

—RIMS contains images of documents submitted to and issued by the Commission after November 16, 1981. Documents from November 1995 to the present can be viewed and printed from FERC's Home Page using the RIMS link or the Energy Information Online icon. Descriptions of documents back to November 16, 1981, are also available from RIMS-on-the-Web; requests for copies of these and other older documents should be submitted to the Public Reference Room.

User assistance is available for RIMS, CIPS, and the Website during normal business hours from our Help line at (202) 208–2222 (E-Mail to *WebMaster@ferc.fed.us*) or the Public Reference at (202) 208–1371 (E-Mail to *public.referenceroom@ferc.fed.us*).

During normal business hours, documents can also be viewed and/or printed in FERC's Public Reference Room, where RIMS, CIPS, and the FERC Website are available. User assistance is also available.

List of Subjects

18 CFR Part 157

Administrative practice and procedure, Natural gas, Reporting and Record keeping requirements.

18 CFR Part 380

Environmental impact statements, Reporting and recordkeeping requirements.

By the Commission.

David P. Boergers,

Secretary.

In consideration of the foregoing, the Commission amends Parts 157 and 380, Chapter I, Title 18, *Code of Federal Regulations,* as follows.

PART 157—APPLICATIONS FOR CERTIFICATES OF PUBLIC CONVENIENCE AND NECESSITY AND FOR ORDERS PERMITTING AND APPROVING ABANDONMENT UNDER SECTION 7 OF THE NATURAL GAS ACT

1. The authority citation for Part 157 continues to read as follows:

Authority: 15 U.S.C. 717–717w, 3301–3432; 42 U.S.C. 7101–7352.

2. In § 157.6, paragraphs (d)(1) introductory text, (d)(1)(i) and (d)(1)(iii), (d)(2)(ii) and (d)(2)(iv), the last sentence of paragraph (d)(3)(ii) and paragraph (d)(3)(v) are revised; and a new paragraph (d)(3)(vii) is added to read as follows:

§ 157.6 Applications; general requirements.

* * * * *

(d) * * *

(1) For all applications filed under this subpart which include construction of facilities or abandonment of facilities (except for abandonment by sale or transfer where the easement will continue to be used for transportation of natural gas), the applicant shall make a good faith effort to notify all affected landowners and towns, communities, and local, state and federal governments and agencies involved in the project:

(i) By certified or first class mail, sent within 3 business days following the date the Commission issues a notice of the application; or

(ii) * * *

(iii) By publishing notice twice of the filing of the application, no later than 14 days after the date that a docket number is assigned to the application, in a daily or weekly newspaper of general circulation in each county in which the project is located.

(2) * * *

(ii) Abuts either side of an existing right-of-way or facility site owned in fee by any utility company, or abuts the edge of a proposed facility site or right-of-way which runs along a property line in the area in which the facilities would be constructed, or contains a residence within 50 feet of the proposed construction work area;

* * * * *

(iv) Is within the area of proposed new storage fields or proposed expansions of storage fields, including any applicable buffer zone.

(3) * * *

(ii) * * * Except: pipelines are not required to include the pamphlet in notifications of abandonments or in the published newspaper notice. Instead, they should provide the title of the pamphlet and indicate its availability at the Commission's Internet address;

* * * * *

(v) A brief summary of what rights the landowner has at the Commission and in proceedings under the eminent domain rules of the relevant state. Except: pipelines are not required to include this information in the published newspaper notice. Instead, the newspaper notice should provide the Commission's Internet address and the telephone number for the Commission's Office of External Affairs; and

* * * * *

(vii) A copy of the Commission's notice of application, specifically stating the date by which timely motions to intervene are due, together with the Commission's information sheet on how to intervene in Commission proceedings. Except: pipelines are not required to include the notice of application and information sheet in the published newspaper notice. Instead, the newspaper notice should indicate that a separate notice is to be mailed to affected landowners and governmental entities.

* * * * *

3. In § 157.203, paragraphs (d)(1) introductory text and (d)(2) introductory text are revised and new paragraphs (d)(3)(iii) and (d)(3)(iv) are added to read as follows:

§ 157.203 Blanket certification.

* * * * *

(d) * * *

(1) Except as identified in paragraph (d)(3) of this section, no activity described in paragraph (b) of this section is authorized unless the company makes a good faith effort to notify all affected landowners, as defined in § 157.6(d)(2), at least 30 days prior to commencing construction or at the time it initiates easement negotiations, whichever is earlier. A landowner may waive the 30-day prior notice requirement in writing as long as the notice has been provided. The notification shall include at least:

* * * * *

(2) For activities described in paragraph (c) of this section, the company shall make a good faith effort to notify all affected landowners, as defined in § 157.6(d)(2), within at least three business days following the date that a docket number is assigned to the application or at the time it initiates easement negotiations, whichever is earlier. The notice should include at least:

* * * * *

(3) * * *

(iii) No landowner notice is required if there is only one landowner and that landowner has requested the service or facilities.

(iv) No landowner notice is required for activities that do not involve ground disturbance or changes to operational air and noise emissions.

PART 380—[AMENDED]

4. In Appendix A to Part 380:

a. The reference to ''(§§ 380.12 (a)(4) and (c)(10))'' in paragraph number 8 under Resource Report 1—General Project Description is revised to read ''(§ 380.12(c)(10))'';

b. The reference to ''(§ 380.12 (f)(1)(ii) & (2))'' in paragraph number 1 under Resource Report 4—Cultural Resources is revised to read ''(§ 380.12 (f)(1)(i) & (2))'';

c. The reference to ''(§ 380.12 (f)(1)(iii) & (2))'' in paragraph number 2 under Resource Report 4 is revised to read ''(§ 380.12 (f)(1)(ii) & (2))''; and

d. The reference to ''(§ 380.12 (l)(3))'' in paragraphs number 4 and 5 under Resource Report 10—Alternatives is revised to read ''(§ 380.12 (l)(2)(ii))''.

[FR Doc. 00–7062 Filed 3–21–00; 8:45 am]

BILLING CODE 6717–01–P

DEPARTMENT OF TRANSPORTATION

Coast Guard

33 CFR part 117

[CGD09–00–001]

RIN–2115–AE47

Drawbridge Operation Regulations; Pine River (Charlevoix), MI

AGENCY: Coast Guard, DOT.

ACTION: Direct final rule.

SUMMARY: By this direct final rule, Commander, Ninth Coast Guard District, is changing the regulations governing the U.S. Route 31 lift bridge, mile 0.3 over Pine River in Charlevoix, Michigan. Currently, the bridge is required to open twice an hour between

6 a.m. and 6 p.m. for recreational vessels all year long. This rule will allow the bridge to open for recreational vessels twice an hour between 6 a.m. and 10 p.m., April 1 through October 31, and require a 12-hour notice from all vessels for openings between January 1 and March 31.

DATES: This rule is effective June 20, 2000, unless the Coast Guard receives written adverse comments or written notice of intent to submit adverse comments on or before May 22, 2000. If adverse comment is received, the Coast Guard will publish a timely withdrawal or this rule in the **Federal Register**.

ADDRESSES: Comments may be mailed or delivered to: Commander (obr), Ninth Coast Guard District, 1240 East Ninth Street, Room 2019, Cleveland, OH 44199–2060 between 6:30 a.m. and 3 p.m., Monday through Friday, except Federal holidays. The telephone number is (216) 902–6084.

The District Commander maintains the public docket for this rulemaking. Comments will become part of this docket and will be available for inspection or copying at the address above.

FOR FURTHER INFORMATION CONTACT: Mr. Scot M. Striffler, Project Manager, Ninth Coast Guard District Bridge Branch, at (216) 902–6084.

SUPPLEMENTARY INFORMATION:

Request for Comments

The Coast Guard encourages interested persons to participate in this rulemaking by submitting written data, views or arguments for or against this rule. Persons submitting comments should include names and addresses, identify the rulemaking [CGD09–00–001] and the specific section of this rule to which each comment applies, and give the reason(s) for each comment. Please submit all comments and attachments in an unbound format, no larger than 8½ by 11 inches, suitable for copying and electronic filing. Persons wanting acknowledgement of receipt of comments should enclose a stamped, self-addressed postcard or envelope.

Regulatory Information

The Coast Guard is publishing a direct final rule, the procedures of which are outlined in 33 CFR 1.05–55, because no adverse comments are anticipated. If no adverse comments or any written notice of intent to submit adverse comment are received within the specified comment period, this rule will become effective as stated in the **DATES** section. In that case, prior to the effective date, the Coast Guard will public a document in the **Federal Register** stating that no adverse comment was received and announcing confirmation that this rule will become effective as scheduled. However, if the Coast Guard receives written adverse comment, the Coast Guard will publish in the final rule section of the **Federal Register** a timely withdrawal of this rule. If the Coast Guard decides to proceed with a rulemaking, a separate Notice of Proposed Rulemaking (NPRM) will be published and a new opportunity for comment provided.

A comment is considered ''adverse'' if the comment explains why this rule would be inappropriate, including a challenge to the rule's underlying premise or approach, or would be ineffective or unacceptable without a change.

Background and Purpose

The owner of the bridge, Michigan Department of Transportation (M–DOT), requested the Coast Guard approve a modified schedule for the bridge to reduce vehicular traffic delays in Charlevoix, MI, during the peak tourist season and to establish a permanent winter operating schedule. The bridge is currently required to open on signal for recreational vessels from three minutes before to three minutes after the hour and half-hour between the hours of 6 a.m. and 6 p.m. throughout the year. M–DOT has secured voluntary participation from local boaters since 1991 to extend the scheduled twice-an-hour openings between 6 p.m. and 10 p.m. on an annual basis. Additionally, the City of Charlevoix receives a large influx of tourist traffic between April and November, and has endorsed this schedule as a means to reduce vehicular traffic back-ups during their peak tourist season. Under the provisions of 33 CFR 117.45, M–DOT has requested, and received, permission from Commander, Ninth Coast Guard District, to operate the bridge with 12-hour advance notice from vessels between January 1 and March 31 since 1991. The Coast Guard has not received any user complaints concerning the voluntary schedule or winter operating schedule since it's inception in 1991.

Under this rule, the bridge will be required to open on signal for recreational vessels only from three minutes before to three minutes after the hour and half-hour between the hours of 6 a.m. and 10 p.m., 7 days a week, from April 1 until October 31. The bridge will open on signal for all vessels between 10 p.m. and 6 a.m. during this period, and at all times between November 1 and December 31. The bridge will open at all times for public vessels of the United States, state and local vessels used in public safety, commercial vessels, vessels seeking shelter from severe weather, and vessels in distress where a delay would endanger life or property. Between January 1 and March 31, the bridge will open on signal if at least 12 hours advance notice is provided by vessels prior to their intended time of passage.

The vehicular traffic count and bridge opening data provided by M–DOT indicated (during a 2-week sample period between August 16 and August 29, 1998) that requests for bridge openings averaged 1.4 times per day between the hours of 10 p.m. and 6 a.m., with 30.6 openings per day between the hours of 6 a.m. and 10 p.m. During this same sample period, 230.5 vehicles per hour crossed the bridge between the hours of 10 p.m. and 6 a.m., and 1186 vehicles per hour crossed between 6 a.m. and 10 p.m. Between 10 p.m. and 6 a.m., the fewest number of vehicles recorded (60) crossed between the 3 a.m. to 4 a.m. hour, while the largest number of vehicles (660) crossed between the 11 p.m. to 12 a.m. hour. Between 6 a.m. and 10 p.m., the fewest number of vehicles recorded (333) crossed during the 6 .a.m. to 7 a.m. hour, while the largest number of vehicles (1572) crossed during the 2 p.m. to 3 p.m. hour. The bridge opening logs showed 221 opening in the month of October 1998 with a mixture of recreational and commercial (or public) vessels. In November 1998, 81 openings were recorded, with only 8 of the 81 specifically for recreational vessels. Only 32 openings were recorded in December 1998 (none for recreational vessels), with 2 openings logged in both January and February, 1999. There were 8 openings logged for March 1999, and 105 openings for April 1999, including a large number of recreational vessels.

The Coast Guard concludes that the dates and times requested by M–DOT for this rule will adequately provide for the reasonable needs of navigation and help reduce vehicular traffic congestion during the peak tourist season in Charlevoix.

Regulatory Evaluation

This rule is not a significant regulatory action under section 3(f) of Executive Order 12866 and does not require an assessment of potential cost and benefits under section 6(a)(3) of that order. The Office of Management and Budget has not reviewed it under that order. It is not significant under the regulatory policies and procedures of the Department of Transportation (DOT) (44 FR 11040; February 26, 1979). The Coast Guard expects the economic impact of this rule to be so minimal that a full Regulatory Evaluation under

paragraph 10e of the regulatory policies and procedures of DOT is unnecessary.

This determination is based on the fact that this rule only modestly changes the existing regulation, and passage through the bridge is available year-round, with few requested openings recorded during the winter months.

Small Entities

Under the Regulatory Flexibility Act (5 U.S.C. 601 *et seq.*), the Coast Guard must consider whether this rule will have a significant impact on a substantial number of small entities. ''Small entities'' may include small businesses and not-for-profit organizations that are independently owned and operated and are not dominant in their fields, and governmental jurisdictions with populations of less than 50,000 people.

This rule simply extends the hours (6 p.m. to 10 p.m.) that the bridge owner may limit openings for recreational vessels. Passage through the bridge is not restricted for commercial or public vessels. The 12-hour advance notice requirement during winter months is an accepted practice and only affects one known entity operating during those months.

Therefore, the Coast Guard certifies under 5 U.S.C. 605(b) that this rule will not have a significant economic impact on a substantial number of small entities.

Collection of Information

This rule does not provide for a collection-of-information requirement under the Paperwork Reduction Act (44 U.S.C. 3501 *et seq.*).

Federalism

The Coast Guard has analyzed this rule under the principles and criteria contained in Executive order 13132, and determined that this rule does not have federalism implications under that Order.

Unfunded Mandates Reform Act

The Unfunded Mandates Reform Act of 1995 (2 U.S.C. 1531–1538) governs the issuance of federal regulations that require unfunded mandates. An unfunded mandate is a regulation that requires a state, local, or tribal government or the private sector to incur direct costs without the federal government having first provided the funds to pay those unfunded mandate costs. This rule will not impose an unfunded mandate.

Taking of Private Property

This rule will not effect a talking of private property or otherwise have taking implications under E.O. 12630, Governmental Actions and Interference with Constitutionally Protected Property Rights.

Civil Justice Reform

This rule meets applicable standards in sections 3(a) and 3(b)(2) of E.O. 12988, Civil Justice Reform, to minimize litigation, eliminate ambiguity, and reduce burden.

Protection of Children

We have analyzed this rule under E.O. 13045, Protection of Children from Environmental Health Risks and Safety Risks. This rule is not an economically significant rule and does not concern an environmental risk to health or risk to safety that may disproportionately affect children.

Environment

The Coast Guard considered the environmental impact of this rule and concluded that, under figure 2–1, paragraph 34(g) of Commandant Instruction M16475.1C, this rule is categorically excluded from further environmental documentation. This rule changes a drawbridge regulation which has been found not to have a significant effect on the environment. A ''Categorical Exclusion Determination'' is not required.

List of Subjects in 33 CFR Part 117

Bridges.

For reasons set out in the preamble, the Coast Guard amends Part 117 of title 33, Code of Federal Regulations, as follows:

PART 117—DRAWBRIDGE OPERATION REGULATIONS

1. The authority citation for Part 117 continues to read as follows:

Authority: 33 U.S.C. 499; 49 CFR 1.46; 33 CFR 1.05–1(g); section 117.255 also issued under the authority of Pub. L. 102–587, 106 Stat. 5039.

2. Revise § 117.641 to red as follows:

§ 117.641 Pine River (Charlevoix).

(a) The draw of the U.S. 31 bridge, mile 0.3 at Charlevoix, shall be operated as follows:

(1) From April 1 through December 31, the draw shall open on signal; except from 6 a.m. to 10 p.m., April 1 to October 31, the draw need open only from three minutes before to three minutes after the hour and half-hour for recreational vessels. Public vessels of the United States, state or local vessels used for public safety, commercial vessels, vessels in distress, and vessels seeking shelter from severe weather shall be passed through the draw as soon as possible.

(2) From January 1, through March 31, the draw shall open on signal if at least 12 hours advance notice is provided prior to a vessel's intended time of passage.

(b) The owner of the bridge shall provide and keep in good legible condition two board gauges painted white with black figures not less than six inches high to indicate the vertical clearance under the closed draw at all water levels. The gages shall be placed on the bridge so that they are plainly visible to operators of vessels approaching the bridge either up or downstream.

Dated: March 14, 2000.

James D. Hull,

Rear Admiral, U.S. Coast Guard Commander, Ninth Coast Guard District.

[FR Doc. 00–7103 Filed 3–21–00; 8:45 am]

BILLING CODE 4910–15–M

ENVIRONMENTAL PROTECTION AGENCY

40 CFR Part 52

[CA 224–0213a; FRL–6549–7]

Approval and Promulgation of Implementation Plans; California State Implementation Plan Revision, Monterey Bay Unified Air Pollution Control District, San Joaquin Valley Unified Air Pollution Control District, Santa Barbara County Air Pollution Control District, South Coast Air Quality Air Management District

AGENCY: Environmental Protection Agency (EPA).

ACTION: Direct final rule.

SUMMARY: EPA is taking direct final action on revisions to the California State Implementation Plan. The revisions concern rules from the following districts: Monterey Bay Unified Air Pollution Control District, San Joaquin Valley Unified Air Pollution Control District, Santa Barbara County Air Pollution Control District, and South Coast Air Quality Air Management District. This approval action will incorporate these rules into the federally approved SIP. The intended effect of approving these rules is to regulate emissions of volatile organic compounds (VOCs) according to the requirements of the Clean Air Act, as amended in 1990 (CAA or the Act). The revised rules control VOC emissions from the coating of wood products and wood flat stock. Thus, EPA is finalizing the approval of these

revisions into the California SIP under provisions of the CAA regarding EPA action on SIP submittals, SIPs for national primary and secondary ambient air quality standards and plan requirements for nonattainment areas.

DATES: This rule is effective on May 22, 2000 without further notice, unless EPA receives adverse comments by April 21, 2000. If EPA receives such comment, it will publish a timely withdrawal **Federal Register** informing the public that this rule will not take effect.

ADDRESSES: Written comments must be submitted to Andrew Steckel at the Region IX office listed below. Copies of the rule revisions and EPA's evaluation report for each rule are available for public inspection at EPA's Region IX office during normal business hours. Copies of the submitted rule revisions are available for inspection at the following locations:

Rulemaking Office (AIR–4), Air Division, U.S. Environmental Protection Agency, Region IX, 75 Hawthorne Street, San Francisco, CA 94105;

Environmental Protection Agency, Air Docket (6102), 401 ''M'' Street, SW., Washington, D.C. 20460;

California Air Resources Board, Stationary Source Division, Rule Evaluation Section, 2020 ''L'' Street, Sacramento, CA 95812;

Monterey Bay Unified Air Pollution Control District, 24580 Silver Cloud Court, Monterey, CA 93940;

San Joaquin Unified Air Pollution Control District, 1999 Tuolumne Street, Suite 200, Fresno, CA 93721;

Santa Barbara County Air Pollution Control District 26 Castilian Drive, Suite B–23, Goleta, CA 93117; and,

South Coast Air Quality Management District, 218 East Copley Drive, Diamond Bar, CA 91765.

FOR FURTHER INFORMATION CONTACT: Jerald S. Wamsley, Rulemaking Office, AIR–4, Air Division, U.S. Environmental Protection Agency, Region IX, 75 Hawthorne Street, San Francisco, CA 94105, Telephone: (415) 744–1226.

SUPPLEMENTARY INFORMATION:

I. Applicability

The rules being approved into the California SIP include: Monterey Bay Unified Air Pollution Control District (MBUAPCD) Rule 429—Applications of Nonarchitectural Coatings; San Joaquin Valley Unified Air Pollution Control District (SJVUAPCD) Rule 4606—Wood Products Coating Operations; Santa Barbara County Air Pollution Control District (SBCAPCD) Rule 351—Surface Coating of Wood Products; South Coast Air Quality Management District(SCAQMD) Rule 1104—Wood Flat Stock Coating Operations. These rules were submitted by the California Air Resources Board (CARB) to EPA on these respective dates: March 23, 1988; February 16, 1999; May 13, 1999; and, October 29, 1999.

II. Background

On March 3, 1978, EPA promulgated a list of ozone nonattainment areas under the provisions of the Clean Air Act, as amended in 1977 (1977 Act or pre-amended Act), that included the Monterey Bay, San Joaquin Valley, Santa Barbara County, and the South Coast air basin. 43 FR 8964, 40 CFR 81.305. On May 26, 1988, EPA notified the Governor of California, pursuant to section 110(a)(2)(H) of the 1977 Act, that the above districts' portions of the California SIP were inadequate to attain and maintain the ozone standard and requested that deficiencies in the existing SIP be corrected (EPA's SIP-Call). On November 15, 1990, the Clean Air Act Amendments of 1990 were enacted. Public Law 101–549, 104 Stat. 2399, codified at 42 U.S.C. 7401–7671q. In amended section 182(a)(2)(A) of the CAA, Congress statutorily adopted the requirement that nonattainment areas fix their deficient reasonably available control technology (RACT) rules for ozone and established a deadline of May 15, 1991 for states to submit corrections of those deficiencies.

Section 182(a)(2)(A) applies to areas designated as nonattainment prior to enactment of the amendments and classified as marginal or above as of the date of enactment. It requires such areas to adopt and correct RACT rules pursuant to pre-amended section 172(b) as interpreted in pre-amendment guidance.[1] EPA's SIP-Call used that guidance to indicate the necessary corrections for specific nonattainment areas. The nonattainment areas subject to this rulemaking were classified as follows: Monterey Bay—moderate; San Joaquin Valley and Santa Barbara—serious; and South Coast—extreme.[2] Therefore, these areas are subject to the RACT fix-up requirement and the May 15, 1991 deadline. The Monterey Bay Area was redesignated as an attainment area for the ozone standard on January 17, 1997 (see 62 FR 2597.)

Along with many other revised RACT rules, the State of California submitted the rules being acted on in this document for incorporation into its SIP on the following dates: March 23, 1988 (MBUAPCD Rule 429); February 16, 1999 (SJVUAPCD Rule 4606); May 13, 1999 (SBCAPCD Rule 351); and October 29, 1999 (SCAQMD Rule 1104.) MBUAPCD adopted Rule 429 on September 16, 1987, prior to EPA's promulgation of its completeness criteria for SIP submittals. SJVUAPCD adopted Rule 4606 on December 17, 1998. SBCAPCD adopted Rule 351 on August 20, 1998. SCAQMD adopted Rule 1104 on August 13, 1999. These submitted rules were found to be complete on April 23, 1999 (SJVUAPCD Rule 4606), June 10, 1999 (SBCAPCD Rule 351), and December 16, 1999 (SCAQMD Rule 1104), pursuant to EPA's completeness criteria that are set forth in 40 CFR part 51, appendix V[3] and are being finalized for approval into the SIP. This document addresses EPA's direct-final action for MBUAPCD Rule 429—Applications of Nonarchitectural Coatings; SJVUAPCD Rule 4606—Wood Products Coating Operations; SBCAPCD Rule 351—Surface Coating of Wood Products; SCAQMD Rule 1104—Wood Flat Stock Coating Operations.

SJVUAPCD Rule 4606, SBCAPCD Rule 351, and SCAQMD Rule 1104 regulate the VOC content of various coatings applied to wood products such as furniture, cabinets, and interior and exterior wood paneling. VOCs contribute to the production of ground level ozone and smog. MBUAPCD Rule 429 regulates spray gun work practices. These rules were adopted originally as part of each air district's effort to achieve the National Ambient Air Quality Standard (NAAQS) for ozone and in response to EPA's SIP-Call and the section 182(a)(2)(A) CAA requirement. EPA's evaluation and final action for these four rules follow below.

III. EPA Evaluation and Action

In determining the approvability of a VOC rule, EPA must evaluate the rule for consistency with the requirements of the CAA and EPA regulations, as found in section 110 and part D of the CAA and 40 CFR part 51 (Requirements for

[1] Among other things, the pre-amendment guidance consists of those portions of the proposed Post-1987 ozone and carbon monoxide policy that concern RACT, 52 FR 45044 (November 24, 1987); ''Issues Relating to VOC Regulation Cutpoints, Deficiencies, and Deviations, Clarification to Appendix D of November 24, 1987 **Federal Register** document'' (Blue Book) (notice of availability was published in the **Federal Register** on May 25, 1988); and the existing control technique guidelines (CTGs).

[2] The Monterey Bay, San Joaquin Valley, Santa Barbara County and South Coast nonattainment areas retained their designation of nonattainment and were classified by operation of law pursuant to sections 107(d) and 181(a) upon the date of enactment of the CAA.

[3] EPA adopted the completeness criteria on February 16, 1990 (55 FR 5830) and, pursuant to section 110(k)(1)(A) of the CAA, revised the criteria on August 26, 1991 (56 FR 42216).

Preparation, Adoption, and Submittal of Implementation Plans). The EPA interpretation of these requirements, which forms the basis for today's action, appears in the various EPA policy guidance documents listed in footnote one. Among those provisions is the requirement that a VOC rule must, at a minimum, provide for the implementation of RACT for stationary sources of VOC emissions. This requirement was carried forth from the pre-amended Act.

For the purpose of assisting state and local agencies in developing RACT rules, EPA prepared a series of Control Technique Guideline (CTG) documents. The CTGs are based on the underlying requirements of the Act and specify the presumptive norms for what is RACT for specific source categories. Under the CAA, Congress ratified EPA's use of these documents, as well as other Agency policy, for requiring States to ''fix-up'' their RACT rules. See section 182(a)(2)(A). The CTG applicable to SJVUAPCD Rule 4606 and SBCAPCD Rule 351 is the following: ''Guideline Series: Control of Volatile Organic Compound Emissions from Wood Furniture Manufacturing Operations,'' USEPA, April, 1996. The CTG applicable to SCAQMD Rule 1104 is the following: ''Guideline Series: Control of Volatile Organic Compound Emissions from Existing Stationary Sources Volume VII: Factory Surface Coating of Flatwood Panelling;'' USEPA, June 1978; EPA–450/2–78–032.

Further interpretations of EPA policy are found in the Blue Book, referred to in footnote one. In general, these guidance documents have been set forth to ensure that VOC rules are fully enforceable and strengthen or maintain the SIP. Each of the subject rules within this action will now be reviewed briefly.

There is no version of MBUAPCD Rule 429—Applications of Nonarchitectural Coatings in the SIP. The submitted rule includes the following provisions:

—Applicability;
—Definitions of terms used within the rule; and,
—Spray application requirements.

EPA has evaluated the submitted MBUAPCD Rule 429 and has determined that it is consistent with the CAA, EPA regulations, and EPA policy. Therefore, MBUAPCD Rule 429—Applications of Nonarchitectural Coatings is being approved under section 110(k)(3) of the CAA as meeting the requirements of section 110(a) and part D.

There is no version of SJVUAPCD Rule 4606—Wood Products Coating Operations in the SIP. The submitted rule includes the following provisions:

—A statement of purpose;
—Applicability;
—Definitions of terms used within the rule;
—Exemptions from the rule;
—Requirements concerning VOC (volatile organic compounds) content of coatings, application equipment, prohibition of specification, and storage of ROC containing materials;
—Recordkeeping to demonstrate compliance with the rule;
—Test methods for determining compliance with the rule; and,
—Compliance schedules.

EPA has evaluated the submitted SJVUAPCD Rule 4606 and has determined that it is consistent with the CAA, EPA regulations, and EPA policy. Therefore, SJVUAPCD Rule 4606—Wood Products Coating Operations is being approved under section 110(k)(3) of the CAA as meeting the requirements of section 110(a) and part D.

There is no version of SBCAPCD Rule 351—Surface Coating of Wood Products in the SIP. The submitted rule includes the following provisions:

—Applicability;
—Exemptions from the rule;
—Definitions of terms used within the rule;
—Requirements concerning ROC (reactive organic compounds) content of coatings, transfer efficiency, prohibition of specification, and storage of ROC containing materials;
—Test methods for determining compliance with the rule; and,
—Recordkeeping to demonstrate compliance with the rule.

EPA has evaluated the submitted rule and has determined that it is consistent with the CAA, EPA regulations, and EPA policy. Therefore, SBCAPCD Rule 351—Surface Coating of Wood Products is being approved under section 110(k)(3) of the CAA as meeting the requirements of section 110(a) and part D.

On June 23, 1994 (see 59 FR 32354), EPA approved into the SIP a version of Rule SCAQMD Rule 1104—Wood Flat Stock Coating Operations adopted by the SCAQMD on March 1, 1991. SCAQMD's submitted Rule 1104 includes the following significant changes from the current SIP-approved rule:

—The allowable VOC content for inks is reduced from 300 grams/liter (gr/l) to 250 gr/l;
—The allowable VOC content for exterior siding coatings is reduced from 300 gr/l to 250 gr/l; and,
—The exempt compounds and volatile organic compound definitions were deleted and SCAQMD Rule 102—Definitions is referenced in their place.

The modified VOC content limits within submitted Rule 1104 do not interfere with reasonable further progress or attainment of the NAAQS, because the VOC content limits have been lowered. The changes to Rule 1104 increase VOC emission reductions compared to the 1991 version of the rule within the SIP. SCAQMD calculated that VOC emissions are reduced by an additional 7.9 pounds per day. For these reasons, the changes within submitted Rule 1104 are consistent with the requirements of section 110(l) of the CAA.

EPA has evaluated the submitted SCAQMD Rule 1104 and has determined that it is consistent with the CAA, EPA regulations, and EPA policy. Therefore, SCAQMD Rule 1104—Wood Flat Stock Coating Operations is being approved under section 110(k)(3) of the CAA as meeting the requirements of section 110(a) and part D.

EPA is publishing this rulemaking without prior proposal because the Agency views this as a noncontroversial amendment and anticipates no adverse comments. However, in the proposed rules section of this **Federal Register** publication, EPA is publishing a separate document that will serve as the proposal to approve the SIP revision should adverse comments be filed. This rule will be effective May 22, 2000 without further notice unless the Agency receives adverse comments by April 21, 2000.

If the EPA receives such comments, then EPA will publish a timely withdrawal in the **Federal Register** informing the public that the rule will not take effect. All public comments received will then be addressed in a subsequent final rule based on the proposed rule. The EPA will not institute a second comment period. Any parties interested in commenting on this rule should do so at this time. If no such comments are received, the public is advised that this rule is effective on May 22, 2000 and no further action will be taken on the proposed rule.

IV. Administrative Requirements

A. Executive Order 12866

The Office of Management and Budget (OMB) has exempted this regulatory action from Executive Order 12866, entitled ''Regulatory Planning and Review.''

B. Executive Order 13132

Federalism (64 FR 43255, August 10, 1999) revokes and replaces Executive

Orders 12612, Federalism and 12875, Enhancing the Intergovernmental Partnership. Executive Order 13132 requires EPA to develop an accountable process to ensure ''meaningful and timely input by State and local officials in the development of regulatory policies that have federalism implications.'' ''Policies that have federalism implications'' is defined in the Executive Order to include regulations that have ''substantial direct effects on the States, on the relationship between the national government and the States, or on the distribution of power and responsibilities among the various levels of government.'' Under Executive Order 13132, EPA may not issue a regulation that has federalism implications, that imposes substantial direct compliance costs, and that is not required by statute, unless the Federal government provides the funds necessary to pay the direct compliance costs incurred by State and local governments, or EPA consults with State and local officials early in the process of developing the proposed regulation. EPA also may not issue a regulation that has federalism implications and that preempts State law unless the Agency consults with State and local officials early in the process of developing the proposed regulation.

This rule will not have substantial direct effects on the States, on the relationship between the national government and the States, or on the distribution of power and responsibilities among the various levels of government, as specified in Executive Order 13132 (64 FR 43255, August 10, 1999), because it merely approves a state rule implementing a federal standard, and does not alter the relationship or the distribution of power and responsibilities established in the Clean Air Act. Thus, the requirements of section 6 of the Executive Order do not apply to this rule.

C. Executive Order 13045

Protection of Children from Environmental Health Risks and Safety Risks (62 FR 19885, April 23, 1997), applies to any rule that: (1) Is determined to be ''economically significant'' as defined under Executive Order 12866, and (2) concerns an environmental health or safety risk that EPA has reason to believe may have a disproportionate effect on children. If the regulatory action meets both criteria, the Agency must evaluate the environmental health or safety effects of the planned rule on children, and explain why the planned regulation is preferable to other potentially effective and reasonably feasible alternatives considered by the Agency.

This rule is not subject to Executive Order 13045 because it does not involve decisions intended to mitigate environmental health or safety risks.

D. Executive Order 13084

Under Executive Order 13084, Consultation and Coordination with Indian Tribal Governments, EPA may not issue a regulation that is not required by statute, that significantly affects or uniquely affects the communities of Indian tribal governments, and that imposes substantial direct compliance costs on those communities, unless the Federal government provides the funds necessary to pay the direct compliance costs incurred by the tribal governments. If the mandate is unfunded, EPA must provide to the Office of Management and Budget, in a separately identified section of the preamble to the rule, a description of the extent of EPA's prior consultation with representatives of affected tribal governments, a summary of the nature of their concerns, and a statement supporting the need to issue the regulation.

In addition, Executive Order 13084 requires EPA to develop an effective process permitting elected and other representatives of Indian tribal governments ''to provide meaningful and timely input in the development of regulatory policies on matters that significantly or uniquely affect their communities.'' Today's rule does not significantly or uniquely affect the communities of Indian tribal governments. Accordingly, the requirements of section 3(b) of Executive Order 13084 do not apply to this rule.

E. Regulatory Flexibility Act

The Regulatory Flexibility Act (RFA) generally requires an agency to conduct a regulatory flexibility analysis of any rule subject to notice and comment rulemaking requirements unless the agency certifies that the rule will not have a significant economic impact on a substantial number of small entities. Small entities include small businesses, small not-for-profit enterprises, and small governmental jurisdictions.

This final rule will not have a significant impact on a substantial number of small entities because SIP approvals under section 110 and subchapter I, part D of the Clean Air Act do not create any new requirements but simply approve requirements that the State is already imposing. Therefore, because the Federal SIP approval does not create any new requirements, I certify that this action will not have a significant economic impact on a substantial number of small entities.

Moreover, due to the nature of the Federal-State relationship under the Clean Air Act, preparation of flexibility analysis would constitute Federal inquiry into the economic reasonableness of state action. The Clean Air Act forbids EPA to base its actions concerning SIPs on such grounds. *Union Electric Co.,* v. *U.S. EPA,* 427 U.S. 246, 255–66 (1976); 42 U.S.C. 7410(a)(2).

F. Unfunded Mandates

Under section 202 of the Unfunded Mandates Reform Act of 1995 (''Unfunded Mandates Act''), signed into law on March 22, 1995, EPA must prepare a budgetary impact statement to accompany any proposed or final rule that includes a Federal mandate that may result in estimated annual costs to State, local, or tribal governments in the aggregate; or to private sector, of $100 million or more. Under section 205, EPA must select the most cost-effective and least burdensome alternative that achieves the objectives of the rule and is consistent with statutory requirements. Section 203 requires EPA to establish a plan for informing and advising any small governments that may be significantly or uniquely impacted by the rule.

EPA has determined that the approval action promulgated does not include a Federal mandate that may result in estimated annual costs of $100 million or more to either State, local, or tribal governments in the aggregate, or to the private sector. This Federal action approves pre-existing requirements under State or local law, and imposes no new requirements. Accordingly, no additional costs to State, local, or tribal governments, or to the private sector, result from this action.

G. Submission to Congress and the Comptroller General

The Congressional Review Act, 5 U.S.C. 801 *et seq.*, as added by the Small Business Regulatory Enforcement Fairness Act of 1996, generally provides that before a rule may take effect, the agency promulgating the rule must submit a rule report, which includes a copy of the rule, to each House of the Congress and to the Comptroller General of the United States. EPA will submit a report containing this rule and other required information to the U.S. Senate, the U.S. House of Representatives, and the Comptroller General of the United States prior to publication of the rule in the **Federal Register**. A major rule

cannot take effect until 60 days after it is published in the **Federal Register**. This rule is not a ''major'' rule as defined by 5 U.S.C. 804(2).

H. National Technology Transfer and Advancement Act

Section 12 of the National Technology Transfer and Advancement Act (NTTAA) of 1995 requires Federal agencies to evaluate existing technical standards when developing a new regulation. To comply with NTTAA, EPA must consider and use ''voluntary consensus standards'' (VCS) if available and applicable when developing programs and policies unless doing so would be inconsistent with applicable law or otherwise impractical.

The EPA believes that VCS are inapplicable to this action. Today's action does not require the public to perform activities conducive to the use of VCS.

I. Petitions for Judicial Review

Under section 307(b)(1) of the Clean Air Act, petitions for judicial review of this action must be filed in the United States Court of Appeals for the appropriate circuit by May 22, 2000. Filing a petition for reconsideration by the Administrator of this final rule does not affect the finality of this rule for the purposes of judicial review nor does it extend the time within which a petition for judicial review may be filed, and shall not postpone the effectiveness of such rule or action. This action may not be challenged later in proceedings to enforce its requirements. (See section 307(b)(2).)

List of Subjects in 40 CFR Part 52

Environmental protection, Air pollution control, Hydrocarbons, Incorporation by reference, Intergovernmental relations, Ozone, Reporting and recordkeeping requirements, Volatile organic compounds.

Dated: February 15, 2000.

Laura Yoshii,

Acting Regional Administrator, Region IX.

Part 52, Chapter I, Title 40 of the Code of Federal Regulations is amended as follows:

PART 52—[AMENDED]

1. The authority citation for Part 52 continues to read as follows:

Authority: 42 U.S.C. 7401 *et seq.*

Subpart F—California

2. Section 52.220 is amended by adding paragraphs (c)(176)(i)(D), (c)(262)(i)(D), (c)(263)(i)(B)(*2*), and (c)(270)(i)(c)(*2*) to read as follows:

§ 52.220 Identification of plan.

* * * * *

(c) * * *

(176) * * *

(i) * * *

(D) Monterey Bay Unified Air Pollution Control District.

(*1*) Rule 429 adopted on September 16, 1987.

* * * * *

(262) * * *

(i) * * *

(D) San Joaquin Valley Unified Air Pollution Control District.

(*1*) Rule 4606 adopted on December 19, 1991 and amended on December 17, 1998.

* * * * *

(263) * * *

(i) * * *

(B) * * *

(*2*) Rule 351 adopted on August 24, 1993 and amended on August 20, 1998.

* * * * *

(270) * * *

(i) * * *

(C) * * *

(*2*) Rule 1104 adopted on April 7, 1978 and amended on August 13, 1999.

* * * * *

[FR Doc. 00–6972 Filed 3–21–00; 8:45 am]

BILLING CODE 6560–50–P

ENVIRONMENTAL PROTECTION AGENCY

40 CFR Part 52

[OR–73–7288–a; FRL–6544–2]

Approval and Promulgation of State Implementation Plans: Oregon

AGENCY: Environmental Protection Agency.

ACTION: Direct final rule.

SUMMARY: The Environmental Protection Agency (EPA) approves various revisions to Oregon's State Implementation Plan (SIP). This revision to the SIP was submitted to EPA, dated October 8, 1998.

The revised regulations include Transportation Conformity (OAR 340–020–710 through 340–020–1080) and General Conformity (OAR–020–1500 through 340–020–1590).

DATES: This direct final rule is effective on May 22, 2000 without further notice, unless EPA receives adverse comment by April 21, 2000. If adverse comment is received, EPA will publish a timely withdrawal of the direct final rule in the **Federal Register** and inform the public that the rule will not take effect.

ADDRESSES: Written comments should be addressed to: Ms. Christine Lemme, Office of Air Quality (OAQ–107), EPA, 1200 Sixth Avenue, Seattle, Washington 98101.

Documents which are incorporated by reference are available for public inspection at the Air and Radiation Docket and Information Center, Environmental Protection Agency, Ariel Rios Building 1200 Pennsylvania Avenue, N.W. Washington, D.C. 20460. Copies of material submitted to EPA may be examined during normal business hours at the following locations: EPA, Region 10, Office of Air Quality, 1200 Sixth Avenue (OAQ–107), Seattle, Washington 98101, and the Oregon Department of Environmental Quality, 811 SW Sixth Avenue, Portland, Oregon 97204–1390.

FOR FURTHER INFORMATION CONTACT: Wayne Elson, Office of Air Quality (OAQ–107), EPA, Seattle, Washington 98101, (206) 553-1463.

SUPPLEMENTARY INFORMATION: The information in this section is organized as follows:

A. What SIP amendments are EPA approving?
B. What is Transportation Conformity?
C. How does Transportation Conformity work?
D. Why must the State have a Transportation Conformity SIP?
E. What is EPA approving today for Transportation Conformity and Why?
F. Why did the State Exclude the Grace Period for New Nonattainment Areas (40 CFR 93.102(d))?
G. What parts of the Transportation Conformity Rule are Excluded?
H. What is General Conformity?
I. What is EPA approving today for General Conformity and Why?

A. What SIP Amendments Are EPA Approving?

The following table outlines the submittals EPA received and is approving in this action:

Date of submittal to EPA	Items revised
10–8–98	Transportation Conformity Rules.
10–8–98	General Conformity Rules.

B. What is Transportation Conformity?

Conformity first appeared in the Act's 1977 amendments (Public Law 95–95). Although the Act did not define conformity, it stated that no Federal department could engage in, support in any way or provide financial assistance for, license or permit, or approve any activity which did not conform to a SIP which has been approved or

promulgated. The Act's 1990 Amendments expanded the scope and content of the conformity concept by applying conformity to state implementation plans. Section 176(c) of the Act defines conformity as conformity to the SIP's purpose of eliminating or reducing the severity and number of violations of the NAAQS and achieving expeditious attainment of such standards. Also, the Act states that no Federal activity will: (1) cause or contribute to any new violation of any standard in any area, (2) increase the frequency or severity of any existing violation of any standard in any area, or (3) delay timely attainment of any standard or any required interim emission reductions or other milestones in any area.

C. How Does Transportation Conformity Work?

The Federal or State Transportation Conformity Rule applies to all nonattainment and maintenance areas in the State. The Metropolitan Planning Organizations (MPO), the State Departments of Transportation (in absence of a MPO), and U.S. Department of Transportation make conformity determinations. These agencies make conformity determinations on programs and plans such as transportation improvement programs, transportation plans, and projects. These agencies calculate the projected emissions for the transportation plans and programs and compare those calculated emissions to the motor vehicle emissions ceiling established in the SIP. The calculated emissions must be smaller than the motor vehicle emissions ceiling for showing a positive conformity with the SIP.

D. Why Must the State Have a Transportation Conformity SIP?

EPA was required to issue criteria and procedures for determining conformity of transportation plans, programs, and projects to a SIP by section 176(c) of the Act. The Act also required the procedure to include a requirement that each State submit a revision to its SIP including conformity criteria and procedures. EPA published the first transportation conformity rule in the November 24, 1993, **Federal Register** (FR), and it was codified at 40 CFR part 51, subpart T and 40 CFR part 93, subpart A. EPA required the States and local agencies to adopt and submit a transportation conformity SIP revision by November 25, 1994. The State of Oregon sent a transportation conformity SIP on April 17, 1995, and EPA approved this SIP on May 16, 1996 (61 FR 24709). EPA revised the transportation conformity rule on August 7, 1995 (60 FR 40098), November 14, 1995 (60 FR 57179), August 15, 1997 (62 FR 43780), and it was codified under 40 CFR part 51, subpart T and 40 CFR part 93, subpart A—Conformity to State or Federal Implementation Plans of Transportation Plans, Programs, and Projects Developed, Funded or Approved Under Title 23 U.S.C. or the Federal Transit Laws (62 FR 43780). EPA's action of August 15, 1997, required the States to change their rules and send a SIP revision by August 15, 1998.

E. What Is EPA Approving Today for Transportation Conformity and Why?

EPA is approving the modified Oregon Transportation Conformity Rules OAR 340–020–710 through 340–020–1080 that the ODEQ submitted on October 8, 1998 except for the sections OAR 340–020–730(3), OAR 340–020–750(4), OAR 340–020–750(4)(b), OAR 340–020–800(3)–(6), OAR 340–020–890(5), OAR 340–020–900(6)(c), OAR 340–020–910(1)(b), OAR 340–020–1000(1)(a) and (2), and OAR 340–020–1030(2). The rationale for exclusion of these sections is discussed in Question G.

The Federal Transportation Conformity Rule required the states to adopt the majority of the Federal rules in verbatim form with a few exceptions. The States cannot make their rules more stringent than the Federal rules unless the State's rules apply equally to non-federal entities as well as Federal entities. The Oregon Transportation Conformity Rule is different from the Federal rule in several areas. These differences were discussed in the May 16, 1996 EPA approval. The State has made no additional changes or modifications, with the exception to the changes required by the revisions to the Federal Transportation Conformity Rule, August 15, 1997 (62 FR 43780). EPA has evaluated this SIP revision and has determined that the State has fully adopted the Federal Transportation Conformity rules as described in 40 CFR part 51, subpart T and 40 CFR part 93, subpart A. Also, the ODEQ has completed and satisfied the public participation and comprehensive interagency consultations during development and adoption of these rules at the local level. Therefore, EPA is approving this SIP revision.

F. Why Did the State Exclude the Grace Period for New Nonattainment Areas (40 CFR 93.102(d))?

The State excluded 40 CFR 93.102(d) of the Federal Transportation Conformity Rule from its State rule. Section 93.102(d) allows up to 12 months for newly designated nonattainment areas to complete their conformity determination. The Sierra Club challenged this section of the rule arguing that allowing a 12-month grace period was unlawful under the Act. On November 4, 1997, the United States Court of Appeals for the District of Columbia Circuit held in *Sierra Club* v. *Environmental Protection Agency,* No. 96–1007, cited EPA's grace period violates the plain terms of the Act and, therefore, is unlawful. Based on this court action, the State has excluded this section from its rule. We agree with the State's action, and exclusion of 40 CFR 93.102(d) will not prevent us from approving the State transportation conformity SIP.

G. What Parts of the Transportation Conformity Rule Are Excluded?

On March 2, 1999, the United States Court of Appeals for the District of Columbia Circuit issued its opinion in *Environmental Defense Fund* v. *Environmental Protection Agency,* No. 97–1637. The Court granted the environmental group's petition for review and ruled that 40 CFR 93.102(c)(1), 93.121(a)(1), and 93.124(b) are unlawful and remanded 40 CFR 93.118(e) and 93.120(a)(2) to EPA for revision to harmonize these provisions with the requirements of the Act for an affirmative determination the Federal actions will not cause or increase violations or delay attainment. The sections that were included in this decision were: (a) 40 CFR 93.102(c)(1) which allowed certain projects for which the National Environmental Policy Act (NEPA) process has been completed by the DOT to proceed toward implementation without further conformity determinations during a conformity lapse, (b) 40 CFR 93.118(e) which allowed use of motor vehicle emissions budgets (MVEB) in the submitted SIPs after 45 days if EPA had not declared them inadequate, (c) 40 CFR 93.120(a)(2) which allowed use of the MVEB in a disapproved SIP for 120 days after disapproval, (d) 40 CFR 93.121(a)(1) which allowed the non-federally funded projects to be approved if included in the first three years of the most recently conforming transportation plan and transportation improvement programs, even if conformity status is currently lapsed, and (e) 40 CFR 93.124(b) which allowed areas to use a submitted SIP that allocated portions of a safety margin to transportation activities for conformity purposes before EPA approval. Since the States were required to submit transportation conformity SIPs not later than August

15, 1998, and include those provisions in verbatim form, the State's SIP revision includes all those sections which the Court ruled unlawful or remanded for consistency with the Act. The EPA can not approve these sections. EPA believes that ODEQ has complied with the SIP requirements and has adopted the Federal rules which were in effect at the time that the transportation conformity SIP was due to EPA. If the court had issued its ruling before adoption and SIP submittal by the ODEQ, we believe the ODEQ would have removed these sections from their rule. The ODEQ has expended its resources and time in preparing this SIP and meeting the Act's statutory deadline, and EPA acknowledges the agency's good faith effort in submitting the transportation conformity SIP on time. ODEQ will be required to submit a SIP revision in the future when EPA revises its rule to comply with the court decision. Because the court decision has invalidated these provisions, EPA believes that it is reasonable to exclude the corresponding sections of the state rules from this SIP approval action. As a result, we are not taking any action on the relevant sections in: OAR 340–020–730(3), OAR 340–020–750(4), OAR 340–020-750(4)(b), OAR 340–020–800(3)-(6), OAR 340–020–890(5), OAR 340–020-900(6)(c), OAR 340–020–910(1)(b), OAR 340–020–1000(1)(a) and (2), and OAR 340–020–1030(2) of the modified Oregon Transportation Conformity Rules. The conformity determinations affected by these sections should comply with the relevant requirements of the statutory provisions of the Act underlying the court's decision on these issues. The EPA will be issuing guidance on how to implement these provisions in the interim prior to EPA amendment of the federal transportation conformity rules. Once these Federal rules have been revised, conformity determinations in Oregon should comply with the requirements of the revised Federal rule until corresponding provisions of the Oregon conformity SIP have been approved by EPA.

H. What Is General Conformity?

General Conformity is similar to Transportation Conformity and also derived from section 176(c) of the CAA. The Act's 1990 Amendments expanded the scope and content of the conformity concept by applying conformity to state implementation plans. Section 176(c) of the Act defines conformity as conformity to the SIP's purpose of eliminating or reducing the severity and number of violations of the NAAQS and achieving expeditious attainment of such standards. Also, the Act states that no Federal activity will: (1) cause or contribute to any new violation of any standard in any area, (2) increase the frequency or severity of any existing violation of any standard in any area, or (3) delay timely attainment of any standard or any required interim emission reductions or other milestones in any area. General Conformity, however applies to federal actions where Transportation Conformity does not apply. Examples are ski resorts on public land, and airport improvements. Also General Conformity is only carried out on project by project basis.

I. What Is EPA Approving Today for General Conformity and Why?

General Conformity requires that activities on federal lands (such as prescribed burning by the Forest Service) align with the air quality goals set in the Oregon SIP. Oregon's current General Conformity rules apply to all areas of the state. Since they were adopted, however, the U.S. Congress clarified that General Conformity pertains only to nonattainment and maintenance areas. The rule is changed to remove the applicability of the rule for federal actions involving prescribed burning in attainment or unclassifiable areas and remove all references to prescribed burning. These revisions will have no effect on existing prescribed burning practices, as implementation of the General Conformity requirements in attainment areas was delayed pending the outcome of a federal determination of applicability. The Oregon Smoke Management Plan will continue to provide statewide guidelines for state and federal land managers to minimize smoke impacts from prescribed burning.

Summary of Action

EPA approves and takes no action on certain Oregon Administrative Rules (as noted in section I): ''Conformity to State or Federal Implementation Plans to Transportation Plans, Programs, and Projects Developed and Funded Under Title 23 U.S.C. or Federal Transit Laws'' found in:

340–20–710 Purpose.
340–20–720 Definitions.
340–20–730 Applicability.
340–20–750 Frequency of Conformity Determinations.
340–20–760 Consultation.
340–20–770 Content of Transportation Plans.
340–20–780 Relationship of Transportation Plan and TIP Conformity with the NEPA Process.
340–20–790 Fiscal Constraints for Transportation Plans.
340–20–800 Criteria and Procedures for Determining Conformity of Transportation Plans, Programs, and Projects: General.
340–20–810 Criteria and Procedures: Latest Planning Assumptions.
340–20–820 Criteria and Procedures: Latest Emissions Model.
340–20–830 Criteria and Procedures: Consultation.
340–20–840 Criteria and Procedures: Timely Implementation of TCMs.
340–20–850 Criteria and Procedures: Currently Conforming Transportation Plan and TIP.
340–20–860 Criteria and Procedures: Projects from a Plan and TIP.
340–20–870 Criteria and Procedures: Localized CO and PM–10 Violations (Hot spots).
340–20–880 Criteria and Procedures: Compliance with PM–10 Control Measures.
340–20–890 Criteria and Procedures: Motor Vehicle Emissions Budget.
340–20–900 Criteria and Procedures: Emissions Reductions in Areas Without Motor Vehicle Emissions Budgets.
340–20–910 Consequences of Control Strategy Implementation Plan Failures.
340–20–1000 Requirements for Adoption or Approval of Projects by Other Recipients of Funds Designated under title 23 U.S.C. or the Federal Transit Laws.
340–20–1010 Procedures for Determining Regional Transportation-Related Emissions.
340–20–1020 Procedures for Determining Localized CO and PM–10 Concentrations (Hot-Spot Analysis).
340–20–1030 Using the Motor Vehicle Emissions Budget in the Applicable Implementation Plan (or Implementation Plan Submission).
340–20–1040 Enforceability of Design Concept and Scope and Project-Level Mitigation and Control Measures.
340–20–1050 Exempt Projects.
340–20–1060 Projects Exempt from Regional Emissions Analyses.
340–20–1070 Traffic Signal Synchronization Projects.

EPA approves the changes made to certain sections of the Oregon Administrative Rules: ''Determining Conformity of General Federal Actions to State and Federal Implementation Plans'' found in:

340–020–1510 Definitions.
340–020–1520 Applicability.
340–020–1530 Conformity Analysis.
340–020–1570 Criteria for Determining Conformity of General Federal Actions.
340–020–1580 Procedures for Conformity Determinations of General Federal Actions.

340–020–1590 Procedures Mitigation of Air Quality Impacts

EPA is publishing this rule without prior proposal because the Agency views this as a noncontroversial submittal and anticipates no adverse comments. However, in the proposed rules section of this **Federal Register** publication, EPA is publishing a separate document that will serve as the proposal to approve the SIP revision should adverse comments be filed. This rule will be effective May 22, 2000 without further notice unless the Agency receives adverse comments by April 21, 2000.

If the EPA receives such comments, then EPA will publish a notice withdrawing the final rule and informing the public that the rule will not take effect. All public comments received will then be addressed in a subsequent final rule based on the proposed rule. The EPA will not institute a second comment period. Parties interested in commenting should do so at this time. If no such comments are received, the public is advised that this rule will be effective on May 22, 2000 and no further action will be taken on the proposed rule.

Administrative Requirements

Under Executive Order 12866 (58 FR 51735, October 4, 1993), this action is not a ''significant regulatory action'' and therefore is not subject to review by the Office of Management and Budget. This action merely approves state law as meeting federal requirements and imposes no additional requirements beyond those imposed by state law. Accordingly, the Administrator certifies that this rule will not have a significant economic impact on a substantial number of small entities under the Regulatory Flexibility Act (5 U.S.C. 601 *et seq.*). Because this rule approves pre-existing requirements under state law and does not impose any additional enforceable duty beyond that required by state law, it does not contain any unfunded mandate or significantly or uniquely affect small governments, as described in the Unfunded Mandates Reform Act of 1995 (Public Law 104–4). For the same reason, this rule also does not significantly or uniquely affect the communities of tribal governments, as specified by Executive Order 13084 (63 FR 27655, May 10, 1998). This rule will not have substantial direct effects on the States, on the relationship between the national government and the States, or on the distribution of power and responsibilities among the various levels of government, as specified in Executive Order 13132 (64 FR 43255, August 10, 1999), because it merely approves a state rule implementing a federal standard, and does not alter the relationship or the distribution of power and responsibilities established in the Clean Air Act. This rule also is not subject to Executive Order 13045 (62 FR 19885, April 23, 1997), because it is not economically significant.

In reviewing SIP submissions, EPA's role is to approve state choices, provided that they meet the criteria of the Clean Air Act. In this context, in the absence of a prior existing requirement for the State to use voluntary consensus standards (VCS), EPA has no authority to disapprove a SIP submission for failure to use VCS. It would thus be inconsistent with applicable law for EPA, when it reviews a SIP submission, to use VCS in place of a SIP submission that otherwise satisfies the provisions of the Clean Air Act. Thus, the requirements of section 12(d) of the National Technology Transfer and Advancement Act of 1995 (15 U.S.C. 272 note) do not apply. As required by section 3 of Executive Order 12988 (61 FR 4729, February 7, 1996), in issuing this rule, EPA has taken the necessary steps to eliminate drafting errors and ambiguity, minimize potential litigation, and provide a clear legal standard for affected conduct. EPA has complied with Executive Order 12630 (53 FR 8859, March 15, 1988) by examining the takings implications of the rule in accordance with the ''Attorney General's Supplemental Guidelines for the Evaluation of Risk and Avoidance of Unanticipated Takings' issued under the executive order. This rule does not impose an information collection burden under the provisions of the Paperwork Reduction Act of 1995 (44 U.S.C. 3501 *et seq.*).

The Congressional Review Act, 5 U.S.C. 801 *et seq.*, as added by the Small Business Regulatory Enforcement Fairness Act of 1996, generally provides that before a rule may take effect, the agency promulgating the rule must submit a rule report, which includes a copy of the rule, to each House of the Congress and to the Comptroller General of the United States. EPA will submit a report containing this rule and other required information to the U.S. Senate, the U.S. House of Representatives, and the Comptroller General of the United States prior to publication of the rule in the **Federal Register**. A major rule cannot take effect until 60 days after it is published in the **Federal Register**. This action is not a ''major rule'' as defined by 5 U.S.C. 804(2). This rule will be effective May 22, 2000 unless EPA receives adverse written comments by April 21, 2000.

Under section 307(b)(1) of the Clean Air Act, petitions for judicial review of this action must be filed in the United States Court of Appeals for the appropriate circuit by May 22, 2000. Filing a petition for reconsideration by the Administrator of this final rule does not affect the finality of this rule for the purposes of judicial review nor does it extend the time within which a petition for judicial review may be filed, and shall not postpone the effectiveness of such rule or action. This action may not be challenged later in proceedings to enforce its requirements. (See section 307(b)(2).)

List of Subjects in 40 CFR Part 52

Environmental protection, Air pollution control, Carbon monoxide, Hydrocarbons, Incorporation by reference, Intergovernmental relations, Reporting and recordkeeping requirements.

Dated: February 22, 2000.

Chuck Findley,

Acting Regional Administrator, Region 10.

PART 52, chapter I, title 40 of the Code of Federal Regulations is amended as follows:

PART 52—[AMENDED]

1.The authority citation for Part 52 continues to read as follows:

Authority: 42 U.S.C. 7401 *et seq.*

Subpart MM—Oregon

2. Section 52.1970 is amended by adding paragraph (c) (129) to read as follows:

§ 52.1970 Identification of plan.

* * * * *

(c) * * *

(129) The Environmental Protection Agency (EPA) approves various amendments to the Oregon State Air Quality Control Plan contained in a submittal to EPA, dated October 8, 1997.

(i) Incorporation by reference.

(A) EPA is approving or taking no action on the modified Oregon Transportation Conformity Rules submitted on October 8, 1998. EPA is approving: OAR 340–20–710, 340–20–720, 340–20–730, 340–20–750, 340–20–760 340–20–770, 340–20–780, 340–20–790, 340–20–800, 340–20–810, 340–20–820, 340–20–830, 340–20–840, 340–20–850, 340–20–860 340–20–870, 340–20–880, 340–20–890, 340–20–900, 340–20–910 340–20–1000, 340–20–1010, 340–20–1020, 340–20–1030, 340–20–1040, 340–20–1050, 340–20–1060 and 340–20–1070, effective September 23, 1998.

(B) EPA is taking no action on sections OAR 340–020–730(3), 340-020–

750(4), 340–020–750(4)(b), 340–020–800(3)-(6), 340–020–890(5), 340–020–900(6)(c), 340–020–910(1)(b), 340–020–1000(1)(a) and (2), and 340–020–1030(2).

(C) EPA approves the changes made to certain sections of the Oregon Administrative Rules: ''Determining Conformity of General Federal Actions to State and Federal Implementation Plans' found in: OAR 340–020–1510, 340–020–1520, 340–020–1530, 340–020–1570, 340–020–1580, and 340–020–1590, effective September 23, 1998.

[FR Doc. 00–6969 Filed 3–21–00; 8:45 am]

BILLING CODE 6560–50–P

ENVIRONMENTAL PROTECTION AGENCY

40 CFR Part 180

[OPP–300965; FRL–6485–3]

RIN 2070–AB78

Cucurbitacins; Exemption from the Requirement of a Tolerance

AGENCY: Environmental Protection Agency (EPA).

ACTION: Final rule.

SUMMARY: This regulation establishes an exemption from the requirement of a tolerance for residues of cucurbitacins from the powders and juices of the Hawkesbury melon *Citrullus lanatus* on various food commodities when applied/used as an inert (other) ingredient (gustatory stimulant) in pesticides applied to growing crops only. Agricultural Research Services, United States Department of Agriculture submitted a petition to EPA under the Federal Food, Drug, and Cosmetic Act, as amended by the Food Quality Protection Act of 1996, requesting an exemption from the requirement of a tolerance. This regulation eliminates the need to establish a maximum permissible level for residues of cucurbitacins from Hawkesbury melon.

DATES: This regulation is effective March 22, 2000. Objections and requests for hearings, identified by docket control number OPP–300965, must be received by EPA on or before May 22, 2000.

ADDRESSES: Written objections and hearing requests may be submitted by mail, in person, or by courier. Please follow the detailed instructions for each method as provided in Unit VIII. of the ''SUPPLEMENTARY INFORMATION.'' To ensure proper receipt by EPA, your objections and hearing requests must identify docket control number OPP–300965 in the subject line on the first page of your response.

FOR FURTHER INFORMATION CONTACT: By mail: Vera Soltero, Registration Division (7505C), Office of Pesticide Programs, Environmental Protection Agency, Ariel Rios Bldg., 1200 Pennsylvania Ave., NW., Washington, DC 20460; telephone number: (703) 308–9359; and e-mail address: soltero.vera@epa.gov.

SUPPLEMENTARY INFORMATION:

I. General Information

A. Does This Action Apply to Me?

You may be affected by this action if you are an agricultural producer, food manufacturer, or pesticide manufacturer. Potentially affected categories and entities may include, but are not limited to:

Categories	NAICS codes	Examples of potentially affected entities
Industry	111 112 311 32532	Crop production Animal production Food manufacturing Pesticide manufacturing

This listing is not intended to be exhaustive, but rather provides a guide for readers regarding entities likely to be affected by this action. Other types of entities not listed in the table could also be affected. The North American Industrial Classification System (NAICS) codes have been provided to assist you and others in determining whether or not this action might apply to certain entities. If you have questions regarding the applicability of this action to a particular entity, consult the person listed under **FOR FURTHER INFORMATION CONTACT.**

B. How Can I Get Additional Information, Including Copies of This Document and Other Related Documents?

1. *Electronically.* You may obtain electronic copies of this document, and certain other related documents that might be available electronically, from the EPA Internet Home Page at http://www.epa.gov/. To access this document, on the Home Page select ''Laws and Regulations'' and then look up the entry for this document under the ''**Federal Register**-Environmental Documents.'' You can also go directly to the **Federal Register** listings at http://www.epa.gov/fedrgstr/.

2. *In person.* The Agency has established an official record for this action under docket control number OPP–300965. The official record consists of the documents specifically referenced in this action, and other information related to this action, including any information claimed as Confidential Business Information (CBI). This official record includes the documents that are physically located in the docket, as well as the documents that are referenced in those documents. The public version of the official record does not include any information claimed as CBI. The public version of the official record, which includes printed, paper versions of any electronic comments submitted during an applicable comment period is available for inspection in the Public Information and Records Integrity Branch (PIRIB), Rm. 119, Crystal Mall #2, 1921 Jefferson Davis Hwy., Arlington, VA, from 8:30 a.m. to 4 p.m., Monday through Friday, excluding legal holidays. The PIRIB telephone number is (703) 305–5805.

II. Background and Statutory Findings

In the **Federal Register** of September 1, 1999 (64 FR 47788) (FRL–6098–6), EPA issued a notice pursuant to section 408 of the Federal Food, Drug, and Cosmetic Act (FFDCA), 21 U.S.C. 346a, as amended by the Food Quality Protection Act (FQPA) (Public Law 104–170) announcing the filing of a pesticide tolerance petition by, Agricultural Research Services, United States Department of Agriculture, Agricultural Research Center, Beltsville, MD 20705. This notice included a summary of the petition prepared by the petitioner United States Department of Agriculture. There were no comments received in response to the notice of filing.

The petition requested that 40 CFR 180.1001(d) be amended by establishing an exemption from the requirement of a tolerance for residues of cucurbitacins derived from the Hawkesbury melon *Citrullus lanatus.* The petitioner noted that the Agency had previously established exemptions from the requirement of a tolerance for the use of buffalo gourd and zucchini juice, as sources of the inert ingredient cucurbitacin (57 FR 40128, September 2, 1992 and 63 FR 43085, August 12, 1998), and is seeking to add the Hawkesbury melon *Citrullus lanatus* as an additional source of cucurbitacins.

Section 408(b)(2)(A)(i) of the FFDCA allows EPA to establish an exemption from the requirement for a tolerance (the legal limit for a pesticide chemical residue in or on a food) only if EPA determines that the tolerance is ''safe.'' Section 408(b)(2)(A)(ii) defines ''safe'' to mean that ''there is a reasonable certainty that no harm will result from aggregate exposure to the pesticide

chemical residue, including all anticipated dietary exposures and all other exposures for which there is reliable information.'' This includes exposure through drinking water and in residential settings, but does not include occupational exposure. Section 408(b)(2)(C) requires EPA to give special consideration to exposure of infants and children to the pesticide chemical residue in establishing a tolerance and to ''ensure that there is a reasonable certainty that no harm will result to infants and children from aggregate exposure to the pesticide chemical residue.* * *''

EPA performs a number of analyses to determine the risks from aggregate exposure to pesticide residues. First, EPA determines the toxicity of pesticides. Second, EPA examines exposure to the pesticide through food, drinking water, and through other exposures that occur as a result of pesticide use in residential settings.

III. Toxicological Profile

Consistent with section 408(b)(2)(D) of FFDCA, EPA has reviewed the available scientific data and other relevant information in support of this action and considered its validity, completeness and reliability and the relationship of this information to human risk. EPA has also considered available information concerning the variability of the sensitivities of major identifiable subgroups of consumers, including infants and children. The nature of the toxic effects caused by cucurbitacins are discussed in this unit.

The Agency in a previous **Federal Register** notice reviewed mammalian toxicity data submitted on zucchini juice and buffalo gourd root powder as part of the establishment of an exemption from the requirement of a tolerance for residues of zucchini juice when used as an alternative source of the inert ingredient gustatory stimulant cucurbitacin (63 FR 43085). A summary of the comparative toxicology data showed a more favorable toxicological profile for the zucchini juice, as compared to the buffalo gourd root powder, as a cucurbit source of cucurbitacins. Zucchini juice was shown to be practically non-toxic to mammals. The acute oral, acute dermal, acute inhalation, primary eye, and skin irritation were all toxicity category IV. No acute systemic toxicity, irritation or dermal sensitization was exhibited in the studies performed with the zucchini juice.

Due to the low levels of cucurbitacins used in the field no acute effects are expected to occur. In addition, due to their rapid degradation, no chronic effects are expected to occur. Neither cucurbitacins nor their metabolites are known or expected to have any effect on the immune or the endocrine systems. These chemicals are not known to be carcinogenic.

According to information supplied by USDA, the Hawkesbury watermelon contains cucurbitacin E-glycoside at levels in the same order of magnitude those found in buffalo gourd root powder, 0.76 milligrams (mg) cucurbitacin E-glycoside/grams (gm) of melon compared to 0.59 mg cucurbitacin E-glycoside/gm of root powder. The Hawkesbury melon does not contain cucurbitacin I. Cucurbitacin I is considered to be more toxic than cucurbitacin E-glycoside (LD_{50} of 40 milligrams/kilograms (mg/kg) to 5 mg/kg). Thus, Hawkesbury melon is also likely to exhibit lower toxicity than buffalo gourd root powder, providing an additional margin of safety.

IV. Aggregate Exposures

In examining aggregate exposure, FFDCA section 408 directs EPA to consider available information concerning exposures from the pesticide residue in food and all other nonoccupational exposures, including drinking water from ground water or surface water and exposure through pesticide use in gardens, lawns, or buildings (residential and other indoor uses).

A. Dietary Exposure

Species of the family *Cucurbitaceae*, such as melons, pumpkins and squash, are commonly used as fruits and vegetables throughout the world, they are naturally occurring and widely available. Seeds of several species are used as sources of flavorings in bakery goods or for oils and proteins. All of these species contain some assortment of naturally occurring cucurbitacins in varying concentrations.

1. *Food.* In the **Federal Register** notice published on August 12, 1998 (63 FR 43085), the Agency reviewed available data on the dietary exposure to cucurbitacins. The use to control corn rootworm is given as an example. Assuming that the maximum permitted level of 3.4 gm/acre/season is applied, with no loss either in the field or during processing, and that all the material is concentrated in the grain, the following exposure would result. The average yield of corn in the United States is 120–130 bushels per acre. At 56 pounds of corn per bushel, the minimum yield is 6,720 pounds per acre and the level of cucurbitacin would be 0.000506 grams of cucurbitacin per pound of corn. A gram of ''straightneck'' squash contains 0.00139 grams of cucurbitacin. Thus, even under these worst case assumptions, consumption of a pound of treated corn would add less cucurbitacin to the diet than a gram serving of squash. At the allowable rate of application the proposed use of these compounds as inert ingredients would result in a negligible increase in exposure to cucurbitacins over those levels which would occur naturally as the result of ingestion of various cucurbit commodities.

2. *Drinking water exposure.* The Agency review cited in the August 12, 1998, **Federal Register** notice established that most cucurbitacins are insoluble in water and transfer of these cucurbitacins to ground water is unlikely. The more water soluble glycosylated forms of cucurbitacins are less toxic to humans. No uses are registered for application to bodies of water.

B. Other Non-Occupational Exposure

There are no cucurbitacin-containing products with residential uses as all uses are for agricultural crop production only.

V. Cumulative Effects

Section 408 (b)(2)(D)(v) of FFDCA requires that, when considering whether to establish, modify or revoke a tolerance or tolerance exemption, the Agency consider ''available information'' concerning the cumulative effects of a particular chemical's residues and ''other substances that have a common mechanism of toxicity.'' The Agency has not made any conclusions as to whether or not cucurbitacins share a common mechanism of toxicity with other chemicals. However, the Hawkesbury melon juice is expected to be practically non toxic to mammals. Due to the expected lack of toxicity, a cumulative risk assessment is not necessary.

VI. Determination of Safety for U.S. Population, Infants and Children

Cucurbitacins are present in varying amounts in many plants regularly consumed by the general public, such as squash, gourds and watermelon. Information available to the Agency indicates that the maximum projected additional exposure to these compounds is significantly less than that from a normal serving of these plants, as previously discussed in section IV(A)(1). The residual amount of cucurbitacins in a pound of corn, for example, is an order of magnitude less than the naturally occurring levels of these substances in a single serving of squash. Dietary exposure to

cucurbitacins through food is not likely to significantly increase due to their use as inert ingredients applied to agricultural commodities. These chemicals are not likely to be found in water. In addition, the use sites of the cucurbitacins are all agricultural for the control of Diabriticine beetles (corn rootworm and cucumber beetles). Therefore, non-dietary exposure to infants and children is not expected.

The Agency had previously established in the **Federal Register** notice published on August 12, 1998 (63 FR 43085) that cucurbitacins contained in zucchini juice were practically non toxic to mammals. Cucurbitacins in Hawkesbury melon are expected to be of similar toxicity. Because of this, the Agency did not use the safety factor analysis in evaluating the risk posed by the compound. This lack of toxicity also supported not applying an additional tenfold safety factor to protect infants and children. In conclusion, the Agency is reasonaly certain that no harm will result to infants and children, or to the general population from a minimally increased exposure to residues of cucurbitacins. Based on the information in this preamble, EPA concludes that there is a reasonable certainty of no harm from aggregate exposure to residues. Accordingly, EPA finds that exempting cucurbitacin residues from the requirement of a tolerance will be safe.

VII. Other Considerations

A. Endocrine Disruptors

FQPA requires EPA to develop a screening program to determine whether certain substances, including pesticides and inert ingredients, ''may have an effect in humans that is similar to an effect produced by a naturally occurring estrogen, or such other endocrine effect....'' The Agency has been working with interested stakeholders to develop a screening and testing program as well as a priority setting scheme. As the Agency proceeds with implementation of this program, further testing of products containing the inert ingredient cucurbitacin for endocrine effects may be required. At this moment, there is no evidence that cucurbitacins are endocrine disruptors.

B. Analytical Method(s)

The Agency is establishing an exemption from the requirement of a tolerance without any change in the previously established limits of no more than 2.5 pounds/acre/season (3.4 grams cucurbitacin/acre/season). Therefore, the Agency has concluded that an analytical method is not required for enforcement purposes of cucurbitacins from the Hawkesbury melon.

C. Existing Tolerances

Prior EPA findings include a temporary exemption for the requirements of a tolerance for residues of the buffalo gourd, *Cucurbita foetidissima*, root powder as a source of cucurbitacins in or on the raw agricultural commodity fields corn for the control of adult corn rootworms (55 FR 49700, November 30, 1990). In addition, the Agency established a permanent exemption from the requirement of a tolerance for the residues of buffalo gourd root powder when used as an inert ingredient (gustatory stimulant) in pesticide formulations applied to growing crops only (57 FR 40128, September 2, 1992). In 1998, the Agency amended the permanent exemption from the requirement of a tolerance to add the residues of zucchini juice, Cucurbita pepo, to the list of inert ingredients (63 FR 43085, August 12, 1998).

D. International Tolerances

There are no international tolerances or tolerance exemptions for cucurbitacins.

E. Conclusion

Therefore, based on the information and the data considered, as well as previous tolerance exemptions granted to cucurbitacins from buffalo gourd root powder and zucchini juice, EPA is establishing an exemption from the requirement of a tolerance for residues of cucurbitacins from the Hawkesbury melon.

VIII. Objections and Hearing Requests

Under section 408(g) of the FFDCA, as amended by the FQPA, any person may file an objection to any aspect of this regulation and may also request a hearing on those objections. The EPA procedural regulations which govern the submission of objections and requests for hearings appear in 40 CFR part 178. Although the procedures in those regulations require some modification to reflect the amendments made to the FFDCA by the FQPA of 1996, EPA will continue to use those procedures, with appropriate adjustments, until the necessary modifications can be made. The new section 408(g) provides essentially the same process for persons to ''object'' to a regulation for an exemption from the requirement of a tolerance issued by EPA under new section 408(d), as was provided in the old FFDCA sections 408 and 409. However, the period for filing objections is now 60 days, rather than 30 days.

A. What Do I Need To Do To File an Objection or Request a Hearing?

You must file your objection or request a hearing on this regulation in accordance with the instructions provided in this unit and in 40 CFR part 178. To ensure proper receipt by EPA, you must identify docket control number OPP–300965 in the subject line on the first page of your submission. All requests must be in writing, and must be mailed or delivered to the Hearing Clerk on or before May 22, 2000.

1. *Filing the request.* Your objection must specify the specific provisions in the regulation that you object to, and the grounds for the objections (40 CFR 178.25). If a hearing is requested, the objections must include a statement of the factual issues(s) on which a hearing is requested, the requestor's contentions on such issues, and a summary of any evidence relied upon by the objector (40 CFR 178.27). Information submitted in connection with an objection or hearing request may be claimed confidential by marking any part or all of that information as CBI. Information so marked will not be disclosed except in accordance with procedures set forth in 40 CFR part 2. A copy of the information that does not contain CBI must be submitted for inclusion in the public record. Information not marked confidential may be disclosed publicly by EPA without prior notice.

Mail your written request to: Office of the Hearing Clerk (1900), Environmental Protection Agency, 401 M St., SW., Washington, DC 20460. You may also deliver your request to the Office of the Hearing Clerk in Rm. C400, Waterside Mall, 401 M St., SW., Washington, DC 20460. The Office of the Hearing Clerk is open from 8 a.m. to 4 p.m., Monday through Friday, excluding legal holidays. The telephone number for the Office of the Hearing Clerk is (202) 260–4865.

2. *Tolerance fee payment.* If you file an objection or request a hearing, you must also pay the fee prescribed by 40 CFR 180.33(i) or request a waiver of that fee pursuant to 40 CFR 180.33(m). You must mail the fee to: EPA Headquarters Accounting Operations Branch, Office of Pesticide Programs, P.O. Box 360277M, Pittsburgh, PA 15251. Please identify the fee submission by labeling it ''Tolerance Petition Fees.''

EPA is authorized to waive any fee requirement ''when in the judgement of the Administrator such a waiver or refund is equitable and not contrary to the purpose of this subsection.'' For additional information regarding the waiver of these fees, you may contact James Tompkins by phone at (703) 305–

5697, by e-mail at tompkins.jim@epa.gov, or by mailing a request for information to Mr. Tompkins at Registration Division (7505C), Office of Pesticide Programs, Environmental Protection Agency, 401 M St., SW., Washington, DC 20460.

If you would like to request a waiver of the tolerance objection fees, you must mail your request for such a waiver to: James Hollins, Information Resources and Services Division (7502C), Office of Pesticide Programs, Environmental Protection Agency, 401 M St., SW., Washington, DC 20460.

3. *Copies for the Docket.* In addition to filing an objection or hearing request with the Hearing Clerk as described in Unit VIII.A., you should also send a copy of your request to the PIRIB for its inclusion in the official record that is described in Unit I.B.2. Mail your copies, identified by docket control number OPP–300965, to: Public Information and Records Integrity Branch, Information Resources and Services Division (7502C), Office of Pesticide Programs, Environmental Protection Agency, Ariel Rios Bldg., 1200 Pennsylvania Ave., NW., Washington, DC 20460. In person or by courier, bring a copy to the location of the PIRIB described in Unit I.B.2. You may also send an electronic copy of your request via e-mail to: opp-docket@epa.gov. Please use an ASCII file format and avoid the use of special characters and any form of encryption. Copies of electronic objections and hearing requests will also be accepted on disks in WordPerfect 6.1/8.0 file format or ASCII file format. Do not include any CBI in your electronic copy. You may also submit an electronic copy of your request at many Federal Depository Libraries.

B. When Will the Agency Grant a Request for a Hearing?

A request for a hearing will be granted if the Administrator determines that the material submitted shows the following: There is a genuine and substantial issue of fact; there is a reasonable possibility that available evidence identified by the requestor would, if established resolve one or more of such issues in favor of the requestor, taking into account uncontested claims or facts to the contrary; and resolution of the factual issues(s) in the manner sought by the requestor would be adequate to justify the action requested (40 CFR 178.32).

IX. Regulatory Assessment Requirements

This final rule establishes an exemption from the tolerance requirement under FFDCA section 408(d) in response to a petition submitted to the Agency. The Office of Management and Budget (OMB) has exempted these types of actions from review under Executive Order 12866, entitled *Regulatory Planning and Review* (58 FR 51735, October 4, 1993). This final rule does not contain any information collections subject to OMB approval under the Paperwork Reduction Act (PRA), 44 U.S.C. 3501 *et seq.,* or impose any enforceable duty or contain any unfunded mandate as described under Title II of the Unfunded Mandates Reform Act of 1995 (UMRA) (Public Law 104–4). Nor does it require any prior consultation as specified by Executive Order 13084, entitled *Consultation and Coordination with Indian Tribal Governments* (63 FR 27655, May 19,1998); special considerations as required by Executive Order 12898, entitled *Federal Actions to Address Environmental Justice in Minority Populations and Low Income Populations* (59 FR 7629, February 16, 1994); or require OMB review or any Agency action under Executive Order 13045, entitled *Protection of Children from Environmental Health Risks and Safety Risks* (62 FR 19885, April 23, 1997). This action does not involve any technical standards that would require Agency consideration of voluntary consensus standards pursuant to section 12(d) of the National Technology Transfer and Advancement Act of 1995 (NTTAA), Public Law 104–113, section 12(d) (15 U.S.C. 272 note). Since tolerances and exemptions that are established on the basis of a petition under FFDCA section 408(d), such as the exemption in this final rule, do not require the issuance of a proposed rule, the requirements of the Regulatory Flexibility Act (RFA) (5 U.S.C. 601 *et seq.*) do not apply. In addition, the Agency has determined that this action will not have a substantial direct effect on States, on the relationship between the national government and the States, or on the distribution of power and responsibilities among the various levels of government, as specified in Executive Order 13132, entitled *Federalism* (64 FR 43255, August 10, 1999). Executive Order 13132 requires EPA to develop an accountable process to ensure ''meaningful and timely input by State and local officials in the development of regulatory policies that have federalism implications.'' ''Policies that have federalism implications'' is defined in the Executive Order to include regulations that have ''substantial direct effects on the States, on the relationship between the national government and the States, or on the distribution of power and responsibilities among the various levels of government.'' This final rule directly regulates growers, food processors, food handlers and food retailers, not States. This action does not alter the relationships or distribution of power and responsibilities established by Congress in the preemption provisions of FFDCA section 408(n)(4).

X. Submission to Congress and the Comptroller General

The Congressional Review Act, 5 U.S.C. 801 *et seq.,* as added by the Small Business Regulatory Enforcement Fairness Act of 1996, generally provides that before a rule may take effect, the agency promulgating the rule must submit a rule report, which includes a copy of the rule, to each House of the Congress and to the Comptroller General of the United States. EPA will submit a report containing this rule and other required information to the U.S. Senate, the U.S. House of Representatives, and the Comptroller General of the United States prior to publication of this final rule in the **Federal Register.** This final rule is not a ''major rule'' as defined by 5 U.S.C. 804(2).

List of Subjects in 40 CFR Part 180

Environmental protection, Administrative practice and procedure, Agricultural commodities, Pesticides and pests, Reporting and recordkeeping requirements.

Dated: March 7, 2000.

James Jones,

Director, Registration Division, Office of Pesticide Programs.

Therefore, 40 CFR chapter I is amended as follows:

PART 180—[AMENDED]

1. The authority citation for part 180 continues to read as follows:

Authority: 21 U.S.C. 321(q), 346(a) and 371.

2. In § 180.1001, the table in paragraph (d), is amended by adding ''or Hawkesbury melon *Citrullus lanatus*'' to the end of the entry for ''Buffalo gourd root powder'' to read as follows:

§ 180.1001 Exemptions from the requirement of a tolerance

* * * * *

(d)* * *

Inert Ingredients	Limits	Uses
* * * * * * *		
Buffalo gourd root powder (*Cucurbita foetidissima* root powder), Zucchini juice (Cucur bita pepo juice) or Hawkesbury melon *Citrullus lanatus*.	* * *	* * *
* * * * * * *		

* * * * *

[FR Doc. 00–6863 Filed 3–21–00; 8:45 am]

BILLING CODE 6560–50–F

DEPARTMENT OF HEALTH AND HUMAN SERVICES

42 CFR Part 121

Organ Procurement and Transplantation Network; Response to Comment Period

AGENCY: Health Resources and Services Administration, HHS.

ACTION: Final rule; response to comments.

SUMMARY: Section 413 of the Ticket to Work and Work Incentives Improvement Act of 1999, signed into law by the President on December 17, 1999, provided that the Organ Procurement and Transplantation Network (OPTN) Final Rule published on April 2, 1998, together with the amendments published on October 20, 1999, was not to become effective before March 16, 2000. The Department published a notice in the **Federal Register** on December 21, 1999, announcing the stay of the Final Rule and informing the public of the opportunity to submit comments on the Final Rule, as amended, for a 60-day period. After considering the comments submitted, the Department has determined that no further amendments to the Final Rule are warranted at this time.

DATES: The Final Rule published on April 2, 1998 (63 FR 16296) and amended on October 20, 1999 (64 FR 56650) became effective on March 16, 2000.

FOR FURTHER INFORMATION CONTACT: Lynn Rothberg Wegman, Director, Division of Transplantation, Office of Special Programs, HRSA, 5600 Fishers Lane, Room 7C–22, Rockville, Maryland 20857. Telephone: 301–443–7577.

SUPPLEMENTARY INFORMATION: In response to the **Federal Register** notice of December 21, 1999 (64 FR 71626), the Department received 2,561 public comments. Of these, 2,205 were form letters. All of the form letters and a majority of the individual comments opposed some provisions of the Final Rule. However, after reviewing these comments, the Department has concluded that the comments raised no significant issues not addressed previously in the history of this rulemaking. Indeed, the comments raised issues which were addressed in the amendments published on October 20, 1999 (64 FR 56650), and in explanatory language in the preamble to those amendments.

For these reasons, the Department has determined that no further amendments to the Final Rule are warranted by the most recent public comments at this time.

Dated: March 17, 2000.

Claude Earl Fox,

Administrator, Health Resources and Services Administration.

Approved: March 17, 2000.

Donna E. Shalala,

Secretary.

[FR Doc. 00–7177 Filed 3–20–00; 12:19 pm]

BILLING CODE 4160–15–P

FEDERAL MARITIME COMMISSION

46 CFR Part 515

[Docket No. 99–23]

In the Matter of a Single Individual Contemporaneously Acting as the Qualifying Individual for Both an Ocean Freight Forwarder and a Non-Vessel-Operating Common Carrier

AGENCY: Federal Maritime Commission.

ACTION: Final rule.

SUMMARY: The Federal Maritime Commission amends its regulations pertaining to the licensing requirements of ocean transportation intermediaries in accordance with the Shipping Act of 1984, as amended by The Ocean Shipping Reform Act of 1998. We are also republishing a certification process pertaining to drug convictions that was previously omitted.

DATES: This rule becomes effective March 22, 2000.

FOR FURTHER INFORMATION CONTACT:

Sandra L. Kusumoto, Director, Bureau of Consumer Complaints and Licensing, Federal Maritime Commission, 800 North Capitol Street, NW, Washington, DC 20573–0001; (202) 523–5788

Thomas Panebianco, General Counsel, Federal Maritime Commission, 800 North Capitol St., NW, Washington, DC 20573–0001; (202) 523–5740

SUPPLEMENTARY INFORMATION: On February 14, 2000, the Federal Maritime Commission (''FMC'' or ''Commission'') published a proposed rule to amend 46 CFR 515.11(c) to allow affiliated companies to have the same qualifying individual to obtain a license under this part. 65 FR 7335. The proceeding was initiated in response to a petition filed with the Commission by the National Customs Brokers & Forwarders Association of America (''NCBFAA'') which sought the issuance of a declaratory order confirming, pursuant to 46 CFR 515.11(c) (1999), that a single individual can act contemporaneously as the qualifying individual for both an ocean freight forwarder and a non-vessel-operating common carrier (''NVOCC''), as long as they are affiliated entities. In the alternative, NCBFAA sought a rulemaking to amend § 515.11(c) to achieve the same result. As discussed in the notice of proposed rulemaking, the Commission denied NCBFAA's petition for a declaratory order, and opted to address its concerns through a rulemaking.

Although not addressed in NCBFAA's petition, the Commission also proposed to amend the definition of ''branch office'' at 46 CFR 515.2(c), by removing the last sentence of the definition, which states that the term does not include a separately incorporated branch office. We explained that the Commission has recognized separately incorporated branch offices elsewhere in part 515, particularly with respect to the licensing and financial responsibility requirements, and that the proposed modification should remove any potential confusion.

Finally, we noted that in promulgating the rules to implement the Ocean Shipping Reform Act of 1998, Pub. L. 105–258, 112 Stat. 1902, in Docket No. 98–28, *Licensing, Financial Responsibility Requirements and General Duties for Ocean*

Transportation Intermediaries, we inadvertently failed to carry over § 510.12(a)(2) into part 515. That section was a certification process to effect the requirements of 21 U.S.C. 862, which provides that Federal benefits shall be withheld in certain circumstances from individuals who have been convicted of drug distribution or possession in Federal or state courts.

For the reasons set forth below, the Commission adopts the rules as proposed.

First, the Commission received one comment in response to the notice of proposed rulemaking from NCBFAA, who finds the Commission's proposal to amend § 515.11(c) sufficiently broad to remedy and eliminate the problems identified by NCBFAA in its petition. In addition, NCBFAA notes that it agrees with the Commission that the proposal will reduce unnecessary regulatory burdens and provide savings to those companies that would have been otherwise forced to modify their business structures. NCBFAA asserts that the proposal will not serve to diminish the professionalism and responsibility of ocean transportation intermediaries (''OTIs''), because the entities will be supervised by a person possessing the requisite expertise in accordance with the Commission's licensing requirements. Finally, NCBFAA declares that it fully supports the proposal, believing it to be in the public interest, and requests that the Commission issue a final rule in the proposed form at the earliest date.

We appreciate NCBFAA's comments and accordingly adopt as final the amendment to § 515.11(c).

In addition, no comments were submitted with respect to either the proposed modification to the definition of branch office or the republication of the certification required by 21 U.S.C. 862. Therefore, the proposed modifications are carried forward in the final rule.

Final Regulatory Flexibility Analysis

Need for and Objective of the Rule

In response to a petition filed by the NCBFAA, the FMC is amending 46 CFR 515.11(c) to allow affiliated ocean freight forwarder and NVOCC entities to have the same qualifying individual in order to obtain a license under this part.

Summary of the Significant Issues Raised by Public Comments in Response to the Initial Regulatory Flexibility Analysis

No public comments were received in response to the initial regulatory flexibility analysis.

Description and an Estimate of the Number of Small Businesses to Which the Rule Will Apply

The Commission believes that the final rule will benefit OTIs by allowing affiliated ocean freight forwarders and NVOCCs to have the same qualifying individual in order to obtain a license under this part. At present, there are approximately 600 OTIs with affiliated ocean freight forwarder and NVOCC operations affected by the proposed rulemaking, including approximately 20 sole proprietorships.

Entities affected by the current rule, particularly sole proprietorships, could have been required to modify their existing business structures, either by: (1) Merging their affiliated ocean freight forwarder and NVOCC operations; (2) creating a branch office; or (3) hiring another qualifying individual to oversee their operations. However, the Commission's Bureau of Consumer Complaints and Licensing (formerly the Bureau of Tariffs, Certification and Licensing) has refrained from denying licenses on this basis pending the conclusion of this proceeding.

Description of the Projected Reporting, Recordkeeping and Other Compliance Requirements of the Rule, Including an Estimate of the Classes of Small Entities That Will Be Subject to the Requirement and the Types of Professional Skills Necessary for the Preparation of the Report or Record

The Commission is not aware of any additional reporting, recordkeeping or other compliance requirements as a result of the proposed rulemaking. Rather, the Commission believes that the impact of the new rule will be primarily to benefit sole proprietorship OTIs by permitting affiliated entities to have the same qualifying individual to satisfy the licensing requirements of this part.

The benefit of the final rulemaking can be measured primarily as the savings to sole proprietorships of not having to modify their business structures as described above. Moreover, it will benefit corporations and partnerships with affiliated freight forwarder and NVOCC operations by giving them greater flexibility in selecting a single qualifying individual for both organizations. However, it is not feasible to specifically quantify these benefits because individual OTI operations vary dramatically in scope and overhead.

The Chairman cannot certify that the final rulemaking will not have a significant economic impact on a substantial number of small entities. However, the Commission believes that the new rule will have no adverse impact on small entities, and further, that the impact will be to benefit OTIs by allowing affiliated entities to have the same qualifying individual to obtain an OTI license.

Steps the FMC Has Taken To Minimize the Significant Economic Impact on Small Entities Consistent With the Stated Objectives of Applicable Statutes, Including a Statement of the Factual, Policy and Legal Reasons for Selecting the Alternative in the Final Rule, and the Reasons for Rejecting Each of the Other Significant Alternatives

The Commission invited comments to the initial regulatory flexibility analysis from all interested parties. However, as stated above, no public comments were received in response to the initial regulatory flexibility analysis. The Commission believes that the only significant impact of the rulemaking will be to benefit OTIs by allowing affiliated ocean freight forwarders and NVOCCs to have the same qualifying individual.

The modifications to the proposed rule, the reasons for selecting alternative approaches, and the reasons for rejecting initial proposals, if any, are each thoroughly described in the Supplementary Information to the final rule.

Relevant Federal Rules That May Duplicate, Overlap, or Conflict With the New Rule

The Commission is not aware of any other federal rules that duplicate, overlap, or conflict with the final rulemaking.

List of Subjects in 46 CFR Part 515

Exports, Freight forwarders, Non-vessel-operating common carriers, Ocean transportation intermediaries, Licensing requirements, Financial responsibility requirements, Reports and recordkeeping requirements.

For the reasons stated in the preamble, the Federal Maritime Commission amends 46 CFR chapter IV, subchapter B, as set forth below:

PART 515—LICENSING, FINANCIAL RESPONSIBILITY REQUIREMENTS, AND GENERAL DUTIES OF OCEAN TRANSPORTATION INTERMEDIARIES

1. The authority citation is amended to read as follows:

Authority: 5 U.S.C. 553; 31 U.S.C. 9701; 46 U.S.C. app. 1702, 1707, 1709, 1710, 1712, 1714, 1716, and 1718; Pub. L. 105–383, 112 Stat. 3411; 21 U.S.C. 862.

2. In § 515.2, revise paragraph (c) to read as follows:

§ 515.2 Definitions.

* * * * *

(c) Branch office means any office in the United States established by or maintained by or under the control of a licensee for the purpose of rendering intermediary services, which office is located at an address different from that of the licensee's designated home office.

* * * * *

3. In § 515.11, revise paragraph (c) to read as follows:

§ 515.11 Basic requirements for licensing; eligibility.

* * * * *

(c) *Affiliates of intermediaries.* An independently qualified applicant may be granted a separate license to carry on the business of providing ocean transportation intermediary services even though it is associated with, under common control with, or otherwise related to another ocean transportation intermediary through stock ownership or common directors or officers, if such applicant submits: a separate application and fee, and a valid instrument of financial responsibility in the form and amount prescribed under § 515.21. The qualifying individual of one active licensee shall not also be designated as the qualifying individual of an applicant for another ocean transportation intermediary license, unless both entities are commonly owned or where one directly controls the other.

* * * * *

4. In § 515.12, revise paragraph (a) to read as follows:

§ 515.12 Application for license.

(a) Application and forms.

(1) Any person who wishes to obtain a license to operate as an ocean transportation intermediary shall submit, in duplicate, to the Director of the Commission's Bureau of Tariffs, Certification and Licensing, a completed application Form FMC–18 Rev. (''Application for a License as an Ocean Transportation Intermediary'') accompanied by the fee required under § 515.5(b). All applicants will be assigned an application number, and each applicant will be notified of the number assigned to its application. Notice of filing of such application shall be published in the **Federal Register** and shall state the name and address of the applicant and the name and address of the qualifying individual. If the applicant is a corporation or partnership, the names of the officers or partners thereof shall be published.

(2) An individual who is applying for a license in his or her own name must complete the following certification:

I, (Name), , certify under penalty of perjury under the laws of the United States, that I have not been convicted, after September 1, 1989, of any Federal or state offense involving the distribution or possession of a controlled substance, or that if I have been so convicted, I am not ineligible to receive Federal benefits, either by court order or operation of law, pursuant to 21 U.S.C. 862.

* * * * *

By the Commission.

Bryant L. VanBrakle,

Secretary.

[FR Doc. 00–7097 Filed 3–21–00; 8:45 am]

BILLING CODE 6730–01–P

DEPARTMENT OF TRANSPORTATION

National Highway Traffic Safety Administration

49 CFR Part 572

[Docket No. NHTSA–2000–7051]

RIN 2127–AG 77

Anthropomorphic Test Devices; 3-Year-Old Child Crash Test Dummy

AGENCY: National Highway Traffic Safety Administration (NHTSA), Department of Transportation.

ACTION: Final rule.

SUMMARY: This document amends our regulation for Anthropomorphic Test Devices by adding a new, more advanced 3-year-old child dummy. The new dummy, part of the family of Hybrid III test dummies, is more representative of humans than the existing Subpart C 3-year-old child dummy in our regulation. Adding the dummy to our regulation is a step toward using the dummy in the tests we conduct to determine compliance with our safety standards. The use of the dummy in our compliance tests will be addressed in separate rulemaking proceedings.

DATES: The amendment is effective on May 22, 2000. The incorporation by reference of certain publications listed in the regulations is approved by the Director of the Federal Register as of May 22, 2000.

Petitions for reconsideration of the final rule must be received by May 8, 2000.

ADDRESSES: Petitions for reconsideration should refer to the docket number of this document and be submitted to: Administrator, Room 5220, National Highway Traffic Safety Administration, 400 Seventh Street, SW., Washington, DC 20590.

FOR FURTHER INFORMATION CONTACT: For nonlegal issues: Stan Backaitis, Office of Crashworthiness Standards (telephone: 202–366–4912). For legal issues: Deirdre R. Fujita, Office of the Chief Counsel (202–366–2992). Both can be reached at the National Highway Traffic Safety Administration, 400 Seventh St., SW., Washington, DC, 20590.

SUPPLEMENTARY INFORMATION: This document amends our regulation for Anthropomorphic Test Devices (49 CFR part 572) by adding a new, more advanced 3-year-old child dummy. The new dummy, part of the family of Hybrid III test dummies, is more representative of humans than the existing 3-year-old child test dummy in part 572, and allows the assessment of the potential for more types of injuries in automotive crashes. The new dummy can be used to evaluate the effects of air bag deployment on out-of-position children, and can provide a fuller evaluation of the performance of child restraint systems in protecting young children.

NHTSA has already specified a number of child test dummies in part 572, including a 3-year-old child dummy (the specifications for which are set forth in subpart C of part 572). That dummy, along with dummies representing a newborn infant, a 9-month-old and a 6-year-old child, are used to test child restraint systems to the requirements of Federal Motor Vehicle Safety Standard No. 213 (49 CFR 571.213). These test devices enable NHTSA to evaluate motor vehicle safety systems dynamically, in a manner that is both measurable and repeatable.

Today's final rule is part of NHTSA's effort to add improved child test dummies in part 572. We recently amended part 572 to add a new, more advanced, Hybrid III type 6-year-old child test dummy. We will soon issue a final rule adding a 12-month-old (CRABI 12) child test dummy. Together with the dummy adopted today, the new child test dummies would be used in tests we have proposed in our occupant crash protection standard (49 CFR 571.208) to assess the risks of air bag deployment for children, particularly unrestrained or improperly restrained children. The new child test dummies could also be incorporated into Standard No. 213 for use in compliance testing of child restraint systems. (Today's final rule only concerns adding the new 3-year-old test dummy to part 572. Issues relating to whether this or the other new dummies

should be incorporated into the compliance tests for Standards Nos. 208 or 213, or into other standards, will be decided in separate rulemaking actions.)

Summary of Final Rule

The specifications for the Hybrid III type 3-year-old test dummy (hereinafter referred to as the H–III3C dummy) consist of a drawing package that shows the component parts, the subassemblies, and the assembly of the complete dummy. The drawing package also defines materials and material treatment processes for all the dummy's component parts, and specifies the dummy's instrumentation and instrument installation methods. In addition, there is a manual containing disassembly, inspection, and assembly procedures, and a dummy parts list. These drawings and specifications ensure that the dummies will vary little from each other in their construction and are capable of consistent and repeatable response in the impact environment. The parts list and drawings are available for inspection in NHTSA's docket (room 5220, 400 Seventh St., SW., Washington, DC 20590, telephone (202) 366–4949). (We are using NHTSA's docket because the drawings cannot be electronically scanned into the DOT Docket Management System.) Copies may also be obtained from Reprographic Technologies, 9000 Virginia Manor Road, Beltsville, MD 20705; Telephone: (301) 210–5600.

NHTSA is specifying impact performance criteria to serve as calibration checks and to further assure the kinematic uniformity of the dummy and the absence of structural damage and functional deficiency from previous use. The tests address head, neck, and thorax impact responses and assess the resistance of the lumbar spine-abdomen region to upper torso flexion motion.

The agency has adopted generic specifications for all of the dummy-based sensors. For most earlier dummies, the agency specified sensors by make and model. However, we believe that approach is unnecessarily restrictive and limits innovation and competition. Accordingly, the specifications adopted today reflect performance characteristics of the sensors used in our evaluation tests of the dummy, that are identified by make and model in a NHTSA technical report ''Development and Evaluation of the Hybrid III 3-year-old Child Dummy'' (December 1998). A copy of this report is in the docket for the notice of proposed rulemaking that we published for this final rule (Docket No. 99–5032). Those sensor characteristics were also the basis for our discussions with a special task force of the Society of Automotive Engineers (SAE) J–211 Instrumentation Committee concerning our work on the dummy.

Background

The need for the H–III3C dummy arose as it became evident that air bags posed risks for out-of-position children. Experience in using the existing 3-year-old dummy in part 572 (Subpart C) showed it to be adequate for the purpose of evaluating the ability of child restraints to protect against the risk of injury under the test conditions specified by Standard No. 213. However, that dummy's injury assessment is limited to head and chest measurements; it is not adequate for evaluating the safety of an air bag environment.

For example, neck injury is one of the primary causes of air bag-related fatalities to out-of-position children. Thus, to evaluate the effects of air bag deployment, a dummy must have a high degree of biofidelity in kinematics and impact responses during neck flexion and extension. However, because the neck of the existing dummy does not have a multi-segment design, it has limited biofidelity in these areas.

By contrast, the more advanced H–III3C dummy provides a more human-like impact response than the existing 3-year-old child dummy, as well as a broader selection of instruments to assess the injury potential to child occupants. Of particular significance are the multi-segmented neck, multi-rib thorax, and the ability to monitor submarining tendencies that could be related to abdominal loading. Because of the greater biofidelity and extended measurement capability of the H–III3C dummy, it can be used to evaluate the safety of children in a much wider array of environments than the existing dummy, including assessing the effects of air bag deployment on out-of-position children.

The H–III3C dummy is part of a family of Hybrid III-type dummies. The first Hybrid III dummy was a 50th percentile male dummy. NHTSA has specified use of this dummy for compliance testing under Standard No. 208, *Occupant Crash Protection,* since 1986, initially for optional use, and more recently on a mandatory basis. The need for a family of Hybrid III-type dummies, having considerably improved biofidelity and anthropometry, was recognized by the Centers for Disease Control and Prevention (CDC) in 1987 when it awarded a contract to Ohio State University under the title ''Development for Multi-sized Hybrid III Based Dummy Family.'' At that time, the funding covered only the development of dummies representing a small female adult and a large male adult. Development of a Hybrid III 3-year-old dummy began in 1992 when the SAE Small Female, Large Male and Six-Year-Old Child Dummies Task Group [1] identified a need for a new dummy equipped with sufficient instrumentation capable of assessing a child's interaction with both air bags and child restraints. The task group noted that the dummy should be suitable for use in sitting, kneeling and standing postures. After a preliminary design was conceived and reviewed, a prototype dummy was developed and evaluated by the task group from 1995 to 1997.

In May 1997, NHTSA initiated a thorough test and evaluation program of the dummy. On completion of our evaluation in the fall of 1998, we tentatively concluded that it was ready for incorporation into part 572. On January 28, 1999, we published an NPRM proposing to incorporate the H–III3C dummy into part 572 as subpart P, and invited comments (64 FR 4385).

Comments on the NPRM

We received comments from eight organizations: Robert A. Denton, Inc. (Denton), General Motors North America (GM), Advocates for Highway and Auto Safety (Advocates), Toyota Motor Corporation (Toyota), National Transportation Safety Board (NTSB), Mitsubishi Motors R & D of America, Inc. (Mitsubishi), the Alliance of Automobile Manufacturers (Alliance), and the SAE Dummy Testing Equipment Subcommittee (SAE).

No commenter opposed adding the H–III3C dummy to part 572. Advocates, Toyota and NTSB expressly supported the incorporation of the H–III3C test dummy. GM, based on its experience with the H–III3C dummy, believes the test dummy is generally suitable for use in crash testing. GM supported the proposal with suggested changes to correct or clarify various specifications in the NPRM for the dummy.[2] Denton (which manufactures load cells used in crash dummies), Mitsubishi and Toyota also had technical comments on various aspects of the proposal. In general, commenters addressed the following issues: calibration procedures and

[1] The task group has been renamed the ''Hybrid III Dummy Family Task Group''. Minutes of the task groups meetings are available for review in the NHTS docket (Docket no. NHTSA98–4283)

[2] The Alliance's comment consisted of a letter fully endorsing the docket comments submitted by GM.

specifications for the head, neck flexion and extension, thorax, and torso flexion; instrumentation specifications; dimensional changes to dummy drawings; and the dummy's user's manual.

Calibration Procedures and Specifications

Head

For calibration, the agency proposed a head drop test in which the head response must not be less than 250 g or more than 280 g. The only comment we received on the proposed corridor was from GM, which agrees with it. The commenter states that the corridor is consistent with available data reviewed by the SAE. In view of the comment received, we have adopted the corridor as proposed in the NPRM.

In the proposed head drop test, the head assembly is suspended for forehead impact from a specified height at an angle of 62±1 degrees between plane D (*i.e.,* the reference surface plane of the head) and the plane of the impact surface. Mitsubishi said that the H–III3C dummy's head is smaller than that of the 50th percentile dummy and thus the surface defining plane D on the neck load mass simulator is too small to correctly insert an angle meter. The commenter states that this makes it very difficult to set up the angle between the lower surface plane of the neck load mass simulator and the plane of impact surface to the required 62±1 degrees. Mitsubishi feels that the angle for the head drop test can be more easily determined and set if an angle of 28 degrees is taken from the transverse plane of the skull cap to skull interface with the skull cap removed. Mitsubishi also recommends using a concave shaped setting jig to hold the dummy head when the angle is measured.

We agree with Mitsubishi's observation that in the head test procedure, it would be easier to set the head orientation relative to the skull/skull cap interface. However, we believe it would be more convenient for test purposes to establish a reference ''D plane'' perpendicular to the skull/skull cap interface. This is because we could use the same ''D plane'' definition for head drop tests and neck pendulum tests in which a headform is used. Further, it is the same D plane definition as used for Hybrid III 6-year-old child and 5th percentile female adult test dummies. As the ''D plane'' is defined to be perpendicular to the skull/skull cap interface, there would not be a need to remove the skull cap or to use a setting jig. With respect to Mitsubishi's suggestion to use a concave-shaped setting jig to hold the head while the angle is set, we do not see a need for requiring such a tool. However, we would not object to its use as long as the final setup of the head orientation does not change once the jig is removed and the skull cap is reattached.

Neck Flexion and Extension

For calibration, the agency proposed a pendulum-mounted headform-neck assembly impact test and corresponding neck flexion and extension performance requirements.

For flexion:

(1) Plane D of the headform must rotate in the direction of preimpact flight with respect to the pendulum's longitudinal centerline not less than 70 degrees and not more than 82 degrees occurring between 45 milliseconds (ms) and 60 ms from time zero, and (2) the peak moment about the occipital condyles must not be less than 44 Newton meters (N-m) and not more than 56 N-m occurring within the minimum and maximum rotation interval and (3) the positive moment shall decay for the first time to 10 N-m in the time frame between 60 ms and 80 ms.

For extension:

(1) Plane D of the headform must rotate in the direction of preimpact flight with respect to the pendulum's longitudinal centerline not less than 80 degrees and not more than 90 degrees occurring between 50 ms and 65 ms from time zero, and (2) the peak negative moment about the occipital condyles must have a value not less than −42 N-m and not more than −53 N-m occurring within the minimum and maximum rotation interval and the negative moment shall decay for the first time to −10 N-m in the time frame between 60 and 80 ms.

The regulatory text proposed for the H–III3C dummy states in § 572.143(c)(3)(i), ''The moment and rotation data channels are defined to be zero when the longitudinal centerline of the neck and pendulum are parallel.'' Section 572.143(c)(4)(i) states that time-zero is defined as the time of initial contact between the pendulum striker plate and the honeycomb material. The pendulum accelerometer data channel shall be at the zero level at this time.

Toyota suggests that all data channels for the neck extension and flexion tests be at the zero level at time zero, rather than only the pendulum accelerometer data channel. We disagree. Our tests indicate that the H–III3C dummy neck is much more flexible than those of the Hybrid III 6-year-old and 5th percentile female adult dummies. As a result, the head-neck complex of the H–III3C dummy experiences some pre-impact kinematic lag as the inclined pendulum accelerates downward towards the vertical. If all data channels, including rotation and moment channels, were made zero at impact, as Toyota suggests, the pre-impact neck rotation lag would not be accounted for in the total rotation of the neck, which would not be in line with the method by which biomechanical corridors were established.

The neck biomechanical response corridors were based on ''flexion'' and ''extension,'' or forward and backward bending of the neck, respectively, due to inertial forces of the head from its neutral position. In order to measure true flexion and extension during calibration tests, the zero level of the data channels must be established prior to initiation of the drop test, when the longitudinal centerline of the neck and pendulum are parallel with respect to each other, *i.e.,* when the pendulum hangs down in a vertical position. With regard to the pendulum accelerometer data channel, that channel must be zeroed at time zero in order to get the correct integrated velocity curve from which the velocity pulse readings are taken at specific time intervals. Accordingly, as proposed in the NPRM, the final rule will retain the time zero setting procedure for the pendulum data channel, but not for the neck channels.

Neck Flexion

GM states that according to SAE-compiled data from necks produced by First Technology Safety Systems (FTSS), a dummy manufacturer, we should adjust the peak moment corridor from the proposed 44–56 N-m range to 40–53 N-m. The proposed range was based on an average of 50 N-m, while the suggested adjusted corridor is based on an average of 46.5 N-m. GM agrees with the rest of the neck flexion performance requirements and the pendulum pulse specifications in NPRM.

We agree that the corridor should be adjusted, but not to the extent suggested by GM. Our analysis of the recommended corridor for the neck flexion moment, based on a complete database consisting of all data submitted by the SAE and additional test data from NHTSA's Vehicle Research and Test Center, indicates that the average peak moment is at 46.6 N-m with a standard deviation (s.d.) of 3.3. Two standard deviations about the mean yield a corridor width of ±14.2%. While GM is correct that narrowed calibration corridors reduce the probability that a complying test dummy can be produced, a wide corridor of this magnitude could permit the

manufacture of necks with a degree of variability that could complicate enforcement efforts. It is accepted practice in the biomechanics community to judge the adequacy of a component's variability in subsystems tests as 0–5% being in the excellent range, 5–8% good, 8–10 % marginally acceptable and above 10% not acceptable. The values proposed by GM would lie outside the acceptable range of variability. Using the 10% value as the maximum allowable variability, we are revising the corridor for neck flexion to a value of 42 N-m minimum and 53 N-m maximum. The above specification will have minimal effects on dummy users, but dummy manufacturers will have to produce necks to lower levels of variability than is indicated in test data generated by dummy manufacturer FTSS. Because FTSS has produced necks with a lower variability, achieving the range is practicable.

Neck Extension

GM notes that SAE compiled data suggest a need to shift the peak rotation corridor in extension from 80–90 degrees to 83–93 degrees. This suggested revision does not increase the width of the corridor proposed in the NPRM, but raises the mean value from 85 degrees to 88 degrees. Also, GM believes that the data indicate a need to widen the peak negative extension moment corridor from the range of −42 N-m to −53 N-m to a range of −41 N-m to −56 N-m as a reflection of a slightly larger spread of the SAE data base. The revised peak moment corridor has nearly the same average (–48 N-m), but is 4% larger in spread than that proposed in the NPRM (15.5% vs. 11.5%). GM agrees with the rest of the neck extension performance corridor requirements and pendulum pulse specifications in NPRM.

We have examined all of the available extension calibration data. The data indicate that the mean peak rotation is 88 degrees with a s.d. at ±2.2. degrees. Accordingly, we agree with GM that the peak rotation corridor should be adjusted to the recommended 83–93 degrees range. As for peak negative moment, we agree with GM's recommended mean value of −48.5 N-m but do not agree with the recommended corridor range of ±15.5%. The available data yields a s.d. of 3.7 which corresponds to the ±15% response corridor at 2 s.d. As explained above in the discussion of neck flexion requirements, the desirable dispersion range for consistency in repeatability should be below 8%, but should not exceed 10%. Applying the 10% limit value yields a peak force response corridor between −43.7 N-m and −53.3 N-m. The revised range is particularly important to assure that the variability of the critical extension moment is not the cause of contention in vehicle compliance tests. As noted in the above discussion, improvements in quality control of necks in production would achieve the desired repeatability in response.

Neck-Headform Flexion/Extension Rotation

The NPRM proposed headform rotation versus time requirements in flexion and extension, in 572.143(b)(1)(i) and 572.143(b)(2)(i), that were identical to the requirements for the existing 3-year-old child dummy specified in subpart C. When the Subpart C dummy was adopted into part 572 in 1979, a means of measuring the peak moment of the neck was not available, so the rotation-displacement specifications were needed. Since 1979, however, the moment-measuring load cell became available for this purpose. With the use of a six-axis load cell on the H–III3C dummy, the timing of the peak moment can be measured and more precisely expressed than when using a headform rotation plot. We believe that specifying a minimum-maximum peak moment within a maximum headform rotation window is sufficient to control the dynamic properties of the neck (to control head kinematics) without having also headform rotation in time requirements. A six-axis load cell simplifies the procedure and removes the need for a redundant requirement for measuring head translation/rotation versus time characteristics.

Accordingly, this final rule does not adopt proposed sections 572.143(b)(1)(i) and 572.143(b)(2)(i) of the NPRM.

Thorax

For calibration, the agency proposed the following impactor probe test and performance requirements: (1) The maximum sternum displacement relative to the spine must be not less than 32 mm and not more than 38 mm, and (2) during this displacement interval, the peak force measured by the probe must be not less than 600 N and not more than 800 N.

Mitsubishi is concerned about the NPRM's lack of dimensional tolerance for the 50.8 mm diameter of the thorax impact test probe. The commenter recommends the probe diameter at 50.8±0.25 mm. We have added the suggested dimensional tolerance along with other modifications involving the development of generic specifications for all impactors.

GM indicates agreement with most of the thorax performance requirements and probe specifications in the NPRM, with the exception of the peak force corridor. GM suggests, based on SAE data, that the corridor should be shifted upward from the proposed range of 600–800 N to 650–850 N. GM's suggested corridor is based on an average of 750 N, and therefore its percentage is slightly lower in width (by approximately 1% (13 % vs. 14%)).

We examined all of the thorax impact data available to us, which includes the SAE data supplied in docket comments and our data generated at VRTC. The combined data sets yield an average impact response of 746 N with s.d. of 32 N, indicating that the NPRM corridor needs adjustment in both the mean response value and the corridor's width. The data suggest that the response corridor's width can be set at ±2 s.d. while remaining just above the 8% good to marginal acceptability norm. Accordingly, this final rule adjusts the thorax response corridor to a new range between 680 N minimum and 810 N maximum, which is within but slightly narrower than the response range recommended by GM.

This final rule also adjusts the limit in § 572.144(b)(1) of the NPRM that the peak force measured during the sternum-to-spine displacement interval must not be more than 800 N at any time. In its comment on the NPRM for the Hybrid III 5th percentile female dummy, TRC suggested that an inertial data spike at the beginning of the test should not be subject to this limit. The agency determined that the initial force spike is an artifact of the inertial mass interaction between the impactor and the dummy, has no biomechanical significance, and is not an indicator of a bad rib set. The final rule for the 5th percentile female adult dummy accommodated the existence of the initial data spike by limiting peak force measurements only to a specified sternum displacement after the initial force spike has occurred. Today's final rule for the Hybrid III 3-year-old child dummy uses the same approach in accommodating the initial data spike, and accordingly excludes force data from the first 12.5 mm of sternum compression.

Thus, this final rule limits peak forces that occur in what we term a ''transition compression zone'' prior to reaching the specified sternum compression corridor limit. The transition compression zone starts at 12.5 mm and ends at 32 mm. We selected 12.5 mm as the beginning of the zone based on available force-compression data which indicate that the initial inertial force spikes occur

between 6 to 8 mm of compression. Thereafter, the force diminishes and does not begin to rise again well after the sternum reaches 12.5 mm of compression.

Unlike the initial force spikes, forces within the transition compression zone should be limited because excessively large force spikes are indicative of deficiencies in the chest structure. Biomechanical response corridors indicate that high peaks in the transition compression zone would not be humanlike and not likely to occur in a well functioning physical spring-mass system, which is representative of the dummy's rib cage. An excessively high peak force occurring in the transition compression zone would indicate a mechanical deficiency within the rib cage structure, even though the peak force requirement within the specified compression corridor is met. Accordingly, an additional upper force peak limit prior to the specified displacement corridor would provide significant assurance that the dummy's rib cage has human-like response and adequate structural integrity. Limiting force peaks in the transition zone is consistent with the specifications for the Hybrid III 6-year-old child and 5th percentile female adult dummies.

We have analyzed the H–III3C dummy's thorax response and found that statistically the peak force of a well-functioning dummy in the transition compression zone could be as high as 860 N. Accordingly, we are including in § 572.144 (b)(1) a 860 N peak force limit for a compression zone bounded between 12.5 mm and 32 mm.

We have also expanded § 572.144(b)(2) to include an explanation of how internal hysteresis of the rib cage is to be measured and included in subsection (c) a more precise description of the clothing that is used on this dummy during the thorax impact test.

Torso

For calibration, the agency proposed the following torso flexion test and performance requirements: (1) When the torso is flexed 45 degrees from vertical by an applied force vector at 62 degrees to 65 degrees from horizontal, the resistance force must not be less than 130 N and not more than 180 N, and (2) upon removal of the force, the upper torso assembly returns to within 10 degrees of its initial position.

Mitsubishi believes the 0.75 kg mass for the loading adapter bracket that holds the torso is proportionally too large considering the dummy's relatively small mass and its soft spine with respect to the larger size Hybrid III dummies. The commenter also believes that a better definition of the loading adapter bracket is needed to avoid possible interference with the dummy during this test. Mitsubishi recommends specifying a ±0.02 kg tolerance to the 0.75 kg weight of the loading adapter bracket.

We agree with Mitsubishi that the mass of the loading bracket should be reduced. In light of the comment, we have reviewed the masses involved in the system that flexes the dummy. As a result of this review, we are revising the specification of mass associated with the pull test to a maximum of 0.70 kg. This mass includes all of the dummy-based attachments and hardware, ⅓ of the pulling wire, and the load cell that is used to measure the pull load. Inasmuch as the same load cell is being used for tests of other size dummies, there is little flexibility to reduce its weight short of designing a new one, which would unnecessarily delay this rulemaking. Because we are specifying a maximum weight for the entire system, test facilities will have some flexibility in selecting the weight of individual components of the system, such as the loading adaptor bracket. Thus, a weight tolerance for the loading adaptor bracket is not needed.

We have clarified section S572.145(c), which specifies the installation of the loading bracket, its design, the attachment of the pulling mechanism and the sequence of applying and releasing of the pull forces. Figure P5 contains considerable additional detail regarding the loading bracket, its installation on the dummy, and alignment of the point of load application with respect to the occipital condyle.

Toyota suggests removal of the upper and lower arms for the calibration test, which is consistent with the procedure for the 50th percentile male dummy in subpart B of part 572. Toyota believes that the applied load will vary due to interference between the lower arm and femur and a flat rigid seating surface. As the mass-moment of the upper body of the dummy will be reduced by the removal of the upper and lower arms, Toyota requests the agency to review the test condition for the load application.

We have reviewed data from our tests and found that the procedure specified in our calibration tests has not generated any interference problems by the arms as Toyota suggests. We do not believe our test procedure will cause the problem described by the commenter. Accordingly, this aspect of the proposed test procedure is unchanged.

Toyota requests that the pull force angle be applied perpendicular to the posterior surface of the spine box, *i.e.,* 45 degrees from the horizontal, rather than at an angle of 62–65 degrees from horizontal. Toyota believes that the applied pull force at the 62–65 degree angle produces not only a flexion moment, but also a compression force on the lumbar spine. Toyota states that applying the force perpendicular to the posterior surface of the spine box is a more reasonable method to evaluate flexion characteristics of the lumbar spine, since it will minimize compression. Toyota notes that the lumbar flexion procedure for the Hybrid III 6-year-old dummy specifies the applied force angle perpendicular to the thoracic spine box instrumentation cavity mating surface.

We do not share Toyota's concern about compression forces on the lumbar spine during the flexion test. The compressive force on the lumbar spine is of little consequence since it is always of the same magnitude from test to test if the dummy conforms to specified pull force requirements. We also note that in any flexion test, compression forces within the lumbar spine are unavoidable. However, in line with Toyota's suggestion, the H–III3C torso flexion calibration procedure has been revised to be consistent with the new Hybrid III 6-year-old child dummy and 5th percentile adult female adult dummy, in that the pulling force is applied perpendicularly to the thoracic spine box instrumentation cavities' rearmost surface. This location does not remove the vertical forces on the lumbar spine as Toyota has suggested, but it does clarify the orientation of the pull force relative to the torso.

Toyota recommends specification of recovery time between repeated tests to enable the dummy skin to recover and thereby increase the likelihood of repeatable calibration tests. The commenter suggests a thirty-minute waiting (recovery) period, to be consistent with specifications in part 572 for the Hybrid III 50th percentile male dummy. We had included a thirty-minute period in the NPRM, see proposed § 572.146(p), and have adopted it in this final rule.

GM objects to the proposed requirement of the torso flexion test as a calibration test. The commenter believes that the dummy's torso flexion performance can be adequately controlled by specifying lumbar spine and abdominal insert designs, and that periodic inspections would be adequate to assure dummy performance rather than a calibration test. GM also states that the proposed injury measurements from out-of-position (OOP) tests with air bags are not expected to be affected by

the lumbar spine-abdomen region of the dummy, because typically in OOP tests maximum loading of the dummy occurs well before gross motion of the upper torso. The commenter also believes that with regard to the use of the dummy in testing child restraint systems, the dummy would be expected to be reasonably well restrained, which would limit the flexion of the upper torso. For these reasons, GM believes the calibration test is not critical for incorporation of the dummy into part 572 and should not be required. Alternatively, GM suggests, if we were to mandate this test, the 10-degree torso return angle requirement should be removed because GM believes it is not needed to evaluate the bending stiffness of the lumbar spine/upper torso assembly.

We disagree with GM that the torso flexion calibration tests should not be required. During a crash test, the dummy's parts interact with each other as a system. This type of interaction can be best controlled or verified by a test that exercises all of the interacting parts. Further, we believe that the dummy's torso flexion stiffness also affects the kinematics of the head, neck, and upper torso with respect to the lower torso. The torso stiffness will thus influence, for example, how far and at what velocity the dummy's head or other parts will move, and will partly determine the orientation of the dummy's upper body half when encountering a deploying air bag. Accordingly, it is important that the torso flexion calibration test for this dummy be included to validate the dummy prior to a dynamic test.

Inasmuch as there were no comments opposing the proposed requirement that the torso's resistance force must be from 130 N to 180 N force when flexed 45 degrees from vertical, we are adopting the proposed specification. We are also adopting the 10-degree torso return angle requirement, as proposed in the NPRM. GM suggests in its comment that "* * * the proposed torso return angle requirement (§ 572.145(b)(2)) (should) be removed, because it is not needed to evaluate the bending stiffness of the lumbar spine/upper torso assembly." We believe there will be a substantial difference in overall torso kinematics between a seated dummy that can and a seated dummy that cannot return its upper torso half from a flexed position to an upright posture, particularly after full flexion has occurred. Without return, the flexion is substantially plastic, while evidence of a specific return would be indicative of the torso mid-section having certain elastic, more human-like properties. Evidence of consistent return would indicate that the forces of restitution are intact, while no or indefinite return would indicate a substantial change within the internal mechanisms of the mid-torso structure, such as failure of the lumbar spine, abdomen, or a substantial shift between interfacing body segments within the abdominal cavity.

Other Issues Relating to Calibration Requirements and Procedures

GM suggests that the specifications for the H–III3C dummy should include a requirement that the dummy must meet calibration specifications following a NHTSA compliance test. The commenter states that part 572 has such a requirement for dummies adopted previously, while the rulemaking proposals on the new Hybrid III 6-year-old, 5th percentile female adult, and on the CRABI 12-month-old infant have not included such a requirement. GM believes that the post-test dummy state of compliance is very important because non-complying compliance test results may be dummy-related. Without post-test dummy verification (calibration), GM claims, no one can determine with reasonable certainty whether a non-compliance is due to a test dummy anomaly or to a real vehicle issue.

We disagree. The pre-test calibration should adequately address the suitability of the dummy for testing. We are concerned that the post-test calibration requirement could handicap and delay our ability to resolve a potential vehicle or motor vehicle equipment test failure solely because the post-test dummy might have experienced a component failure and might no longer conform to all of the specifications. On several occasions during the past few years, a dummy has been damaged during a compliance test such that it could not satisfy all of the post-test calibration requirements. Yet the damage to the dummy at the time it occurred did not affect the dummy's ability to accurately measure the performance requirements of the standard. We are also concerned that the interaction between the vehicle or equipment and the dummy could be directly responsible for the dummy's inability to meet calibration requirements. In such an instance, the failure of the test dummy should not preclude the agency from seeking compliance action. Thus, we conclude that a post-calibration requirement would not be in the public interest, since it could impede our proceeding with a compliance investigation in those cases where the test data indicate that the dummy measurements were not markedly affected by the dummy damage or that some aspect of vehicle or equipment design was responsible for the dummy failure.[3]

Instrumentation

The agency proposed generic specifications for all of the dummy-based sensors, which included—

(1) The accelerometer designated as SA572–S4;
(2) Force and/or moment transducers:
(a) Anterior-superior iliac spine load cell SA572–S17,
(b) Pubic load cell SA572–S18,
(c) Neck SA572–S19,
(d) Lumbar spine SA572–S20,
(e) Shoulder load cell SA572–S21, and
(f) Acetabulum load cell SA572–S22; and
(3) The thorax based chest deflection potentiometer SA572–S50.

Comments on proposed generic sensors were received from Denton and GM.

Load Cell Sensitivity (Output)

Denton notes that the load cell sensitivity specification was unnecessarily restrictive without notable benefit. Denton argues that input/output specifications were not needed because future technology may produce systems that could change their definition. Accordingly, Denton requests that all references to the type of output be removed from drawings SA572–S17, –S18, –S19, –S20, –S21, and –S22.

We do not agree with Denton that output specifications are not needed. A sensor is only good if it is capable of generating some kind of a controlled output for a given input. Accordingly, we are retaining input/output requirements for all of the specified generic sensors.

Bridge Resistance Specifications

Denton suggests that bridge resistance specifications, shown in drawings SA572–S18, –S19 and –S21, are not needed and should be removed. The commenter believes that some test facilities may prefer using other bridge resistances than those shown on the draft drawings due to their particular data acquisition systems. However, their ability to use those transducers would be necessarily curtailed because of the restrictive specification in the drawings, even though different bridge resistances may give identical performance. We agree with this suggestion and have removed the bridge resistance

[3] We issued our final rules on the Hybrid III-type 6-year-old child and 5th percentile adult female dummies since the date of the Alliance's comment. Consistent with today's rule, those final rules do not include a post-test calibration requirement.

specifications from the revised generic sensor drawings.

Load Cell Free Air Resonant Frequency and Weight Specifications

Denton suggests that the assignment of free air resonant frequencies (the first order ringing frequency of a freely suspended load cell) should be consistent with those for the new 6-year-old dummy and a new 5th percentile female adult dummy. Denton also believes that several drawings should indicate a maximum weight, and not a nominal weight. We concur with these suggestions. While we would prefer to establish nominal weights for the load cells,[4] there is no acceptable method of weighing the load cells, particularly those containing integral cables. Because of this, weight tolerances for the load cells could not be established. Until an acceptable weighing procedure is developed, dummy manufacturers must take into account the variabilities of load cell weights to assure that each subsystem weight specification, as shown in sheet 6 of drawing 210–0000, is met. Accordingly, we have specified in the sensor drawings only maximum weights and minimum free air resonant frequencies. They are as follows:

—Drawing SA572–S17 (ASIS)—0.20 kg (0.44 lb) maximum each side and 2000 Hz minimum free air resonant frequency;

—Drawing SA572–S18 (pubic load cell)—0.24 kg (0.53 lb) maximum and 2000 Hz minimum free air resonant frequency;

—Drawing SA572–S19 (neck load cell)—0.24 kg (0.52 lb) maximum and 3000 Hz minimum free air resonant frequency;

—Drawing SA572–S20 (lumbar load cell)—0.26 kg (0.58 lb) maximum and 3000 Hz minimum free air resonant frequency;

—Drawing SA572–S21 (shoulder load cell)—0.09 kg (0.19 lb) maximum and 2000 Hz minimum free air resonant frequency; and

—Drawing SA572–S22 (acetabulum load cell)—0.19 kg (0.42 lb) maximum and 5000 Hz minimum free air resonant frequency.

Denton also suggests that the load cell weight specifications should clarify that the specified weight does not include any cable or mounting hardware, except as noted. The commenter states that drawing S19 should indicate that the weight includes the head washer and four 10–24 × ¾″ flat head cap screws. All of the agency specifications for accelerometers and load cells indicate what is considered as part of the load cell. We have modified drawing S19 to include the head washer and four 10–24 × ¾″ head cap screws.

Accelerometer Specifications

GM supports generic specification for sensors to reduce the restrictive nature of instrumentation specifications seen in the past. However, GM believes that the sensor specifications included in the NPRM are not sufficiently generic. GM notes that the accelerometer specified in drawing SA572–S4 limits the users to only two models, based on ability to meet the seismic mass and hole pattern requirements. The commenter states that other accelerometers might be acceptable but can not be used under the proposed specification. GM feels a more functional description is needed that would define, by dimensions and tolerances, an intersection location of the triaxial accelerometer sensing masses.

We are aware of at least two manufacturers that have in the past or are now marketing accelerometers that match the specifications listed in drawing SA572–S4. As to the specific hole patterns and associated mounting platforms, they are needed for mounting the accelerometers. Since the same accelerometer specifications apply to all other dummies, the accelerometer must be attachable to the new Hybrid III 6-year-old and the 5th percentile female adult as well as to the CRABI 12-month-old dummies, all of which use the common hole pattern for attachment. Although the sensing mass of each accelerometer is defined relative to reference surfaces of the accelerometer structure, hole patterns and mounting platforms need also to be known to assure existence and compatibility of space and mating surfaces and methods of attachment in the areas that they are to be mounted. In addition, the mounting surfaces and attachments must have appropriate structural integrity for vibration control purposes. The defined structure and methods of attachment assure that this is met. The concept, as GM suggests, of defining a location in space for the intersection center of seismic masses of several accelerometers rather than specifying it in design parameters is an attractive concept and warrants further consideration, as this approach could allow greater use of equivalent alternatives. However, none of the commenters offered a model to further this concept and not enough is known at this time on the consequences of the suggested approach were it to be adopted in this final rule.

Accelerometer Frequency Response

GM requested clarification as to what it means for a piece of instrumentation to meet SAE J211 CFC 1000 specifications. GM stated that most accelerometers do not fully meet the roll-off specification and no damped accelerometers can meet any of the roll-off requirements. Denton, in its comments on frequency response for the 5th percentile dummy (Docket No NHTSA–1998–4283–10), suggested adding a note on each of the sensor drawings indicating ''* * * what CFC channel class should be used for recording data with that type of transducer.'' This is a reasonable suggestion, since the SAE J211 clearly deals with the entire data channel and not with a particular sensor within the data channel. Accordingly, a note has been added to the SA572–S4 drawing saying that ''Signal output must be compatible with and recordable in the data channel defined by SAE J211.''

Optional Transducers

GM believes pelvis accelerometers should be optional as they are not required for any proposed injury measurement requirement. GM suggests changing the NPRM language from ''(these accelerometers) are to be mounted'' to ''(these accelerometers) are allowed to be mounted * * *'' We agree with the GM comment and have revised § 572.146(k) to indicate optional use of pelvis accelerometers and § 572.146(c) to indicate optional use of the neck load cell at the lower neck transducer location.

Dimensional Changes to Dummy Drawings

Denton requests that drawing 210–4512 be revised to correct the location of the 1.880 inch dimension. Denton also noted that additional specifications are needed in drawing 210–4510 to assure a fit of the load cell on the mounting surfaces. Denton suggests adding further dimensions on drawing 210–4512 to allow for machining after welding, and a specification to drawing 210–4510 to require that a region at least 1.300 inch from center on each side of the part (total width 2.600 inch) must be flat within 0.005 in. We agree with the recommended changes and have revised the drawings as suggested.

Title and Features of the Users Manual

The NPRM noted in §§ 572.140(a)(2) and 572.141(a)(2) that the final rule package will contain a ''User's Manual''

[4] Load cell weights with only ''maximum'' weight designations could vary considerably. While not specifying a minimum load cell weight may not matter much for larger adult test dummies, lack of such a specification poses a potentially larger problem for the smaller child test dummies.

for the H–III3C dummy. The manual would contain identified procedures on how to inspect, assemble and disassemble the dummy, similar to procedures published for other part 572 dummies. Responding to the NPRM, the SAE notes that it has developed a User's Manual for this dummy and suggests its incorporation by reference into part 572. We have reviewed its content, but decline to reference it for several reasons.

Our review found the SAE's manual containing, besides inspection and assembly procedures, several calibration procedures and response requirements. Calibration procedures and response requirements are set forth by this final rule in part 572. It is not advisable to establish requirements in a separate document, which could contain calibration procedures and response requirements that are inconsistent or in conflict with the part 572 requirements. Further, while the SAE manual appears to be reasonably well developed and well suited for research use, it has a number of redundancies and ambiguities which render it less suited for regulation and compliance testing purposes. Further, the SAE User's Manual is copyrighted by both the SAE and FTSS, which restrict its use and distribution as a public document.

Because we concluded that the SAE manual should not be incorporated into part 572, we generated and incorporated into part 572 our own document addressing procedures for inspection, assembly and disassembly of the H–III3C dummy. We have titled the document *Procedures for Assembly, Disassembly and Inspection (PADI), subpart P, Hybrid III 3-year-old Child Crash Test Dummy (H–III3C, Alpha version), February 2000.* Our incorporation of the PADI does not in itself prohibit anyone from using the procedures contained in the SAE User's Manual. However, persons using the SAE document in tests assuring compliance with our safety standards are responsible for ensuring that the test dummies they use meet the specifications adopted today and are suitable for compliance testing.

Nomenclature

The H–III3C dummy is incorporated into part 572 as subpart P. Today's final rule designates the dummy adopted today as alpha version. Further notable changes to the dummy will be designated as beta, gamma, etc., to assure that modifications can be easily tracked and identified.

Regulatory Analyses and Notices

Executive Order 12866 and DOT Regulatory Policies and Procedures

This rulemaking document was not reviewed by the Office of Management and Budget under E.O. 12866, ''Regulatory Planning and Review.'' The rulemaking action is also not considered to be significant under the Department's Regulatory Policies and Procedures (44 FR 11034, February 26, 1979).

This document amends 49 CFR part 572 by adding design and performance specifications for a new 3-year-old child dummy that the agency may later incorporate into Federal motor vehicle safety standards. This rule indirectly imposes requirements on only those businesses which choose to manufacture or test with the dummy, in that the agency will only use dummies for compliance testing that meet all of the criteria specified in this rule. It may affect vehicle and air bag manufacturers if it is incorporated by reference into the advanced air bag rulemaking, and may affect child restraint manufacturers if it is incorporated into the child restraint system standard.

The cost of an uninstrumented 3-year-old dummy is approximately $30,000. Instrumentation would add $15,000 to $50,000 to the cost, depending on the amount of instrumentation the user chooses to add.

Because the economic impacts of this final rule are minimal, no further regulatory evaluation is necessary.

Executive Order 13132

We have analyzed this rule in accordance with Executive Order 13132 (''Federalism''). We have determined that this rule does not have sufficient Federalism impacts to warrant the preparation of a federalism assessment.

Executive Order 13045

Executive Order 13045 (62 FR 19885, April 23, 1997) applies to any rule that: (1) Is determined to be ''economically significant'' as defined under E.O. 12866, and (2) concerns an environmental, health or safety risk that NHTSA has reason to believe may have a disproportionate effect on children. If the regulatory action meets both criteria, we must evaluate the environmental health or safety effects of the planned rule on children, and explain why the planned regulation is preferable to other potentially effective and reasonably feasible alternatives considered by us.

This rule is not subject to the Executive Order because it is not economically significant as defined in E.O. 12866. It also does not involve decisions based on health risks that disproportionately affect children.

Executive Order 12778

Pursuant to Executive Order 12778, ''Civil Justice Reform,'' we have considered whether this rule will have any retroactive effect. This rule does not have any retroactive effect. A petition for reconsideration or other administrative proceeding will not be a prerequisite to an action seeking judicial review of this rule. This rule does not preempt the states from adopting laws or regulations on the same subject, except that it does preempt a state regulation that is in actual conflict with the federal regulation or makes compliance with the Federal regulation impossible or interferes with the implementation of the federal statute.

Regulatory Flexibility Act

Pursuant to the Regulatory Flexibility Act (5 U.S.C. 601 *et seq.*, as amended by the Small Business Regulatory Enforcement Fairness Act (SBREFA) of 1996) whenever an agency is required to publish a notice of rulemaking for any proposed or final rule, it must prepare and make available for public comment a regulatory flexibility analysis that describes the effect of the rule on small entities (*i.e.,* small businesses, small organizations, and small governmental jurisdictions). However, no regulatory flexibility analysis is required if the head of an agency certifies the rule will not have a significant economic impact on a substantial number of small entities. SBREFA amended the Regulatory Flexibility Act to require Federal agencies to provide a statement of the factual basis for certifying that a rule will not have a significant economic impact on a substantial number of small entities.

I have considered the effects of this rulemaking action under the Regulatory Flexibility Act (5 U.S.C. 601 *et seq.*) and certify that this rule will not have a significant economic impact on a substantial number of small entities. The rule does not impose or rescind any requirements for anyone. The Regulatory Flexibility Act does not, therefore, require a regulatory flexibility analysis.

National Environmental Policy Act

We have analyzed this amendment for the purposes of the National Environmental Policy Act and determined that it will not have any significant impact on the quality of the human environment.

Paperwork Reduction Act

Under the Paperwork Reduction Act of 1995, a person is not required to respond to a collection of information by a Federal agency unless the collection displays a valid OMB control number. This rule does not have any new information collection requirements.

National Technology Transfer and Advancement Act

Section 12(d) of the National Technology Transfer and Advancement Act of 1995 (NTTAA), Public Law 104–113, section 12(d) (15 U.S.C. 272) directs us to use voluntary consensus standards in regulatory activities unless doing so would be inconsistent with applicable law or otherwise impractical. Voluntary consensus standards are technical standards (*e.g.,* materials specifications, test methods, sampling procedures, and business practices) that are developed or adopted by voluntary consensus standards bodies, such as the Society of Automotive Engineers (SAE). The NTTAA directs us to provide Congress, through OMB, explanations when we decide not to use available and applicable voluntary consensus standards.

The H–III3C dummy that is the subject of this document was developed under the auspices of the SAE. All relevant SAE standards were reviewed as part of the development process. The following voluntary consensus standards have been used in developing the dummy: SAE Recommended Practice J211, Rev. Mar95 ''Instrumentation for Impact Tests''; and SAE J1733 of 1994–12 ''Sign Convention for Vehicle Crash Testing.''

Unfunded Mandates Reform Act

Section 202 of the Unfunded Mandates Reform Act of 1995 (UMRA) requires Federal agencies to prepare a written assessment of the costs, benefits and other effects of proposed or final rules that include a Federal mandate likely to result in the expenditure by State, local or tribal governments, in the aggregate, or by the private sector, of more than $100 million in any one year (adjusted for inflation with base year of 1995). Before promulgating a NHTSA rule for which a written statement is needed, section 205 of the UMRA generally requires us to identify and consider a reasonable number of regulatory alternatives and adopt the least costly, most cost-effective or least burdensome alternative that achieves the objectives of the rule.

This rule does not impose any unfunded mandates under the Unfunded Mandates Reform Act of 1995. This rule does not meet the definition of a Federal mandate because it does not impose requirements on anyone. Further, it will not result in costs of $100 million or more to either State, local, or tribal governments, in the aggregate, or to the private sector. Thus, this rule is not subject to the requirements of sections 202 and 205 of the UMRA.

Regulation Identifier Number (RIN)

The Department of Transportation assigns a regulation identifier number (RIN) to each regulatory action listed in the Unified Agenda of Federal Regulations. The Regulatory Information Service Center publishes the Unified Agenda in April and October of each year. You may use the RIN contained in the heading at the beginning of this document to find this action in the Unified Agenda.

List of Subjects in 49 CFR Part 572

Motor vehicle safety, Incorporation by reference.

In consideration of the foregoing, NHTSA amends 49 CFR Part 572 as follows:

PART 572—ANTHROPOMORPHIC TEST DUMMIES

1. The authority citation for Part 572 continues to read as follows:

Authority: 49 U.S.C. 322, 30111, 30115, 30117 and 30166; delegation of authority at 49 CFR 1.50.

2. 49 CFR part 572 is amended by adding a new subpart P consisting of §§ 572.140–572.146, to read as follows:

Subpart P—Hybrid III 3-Year-Old Child Crash Test Dummy, Alpha Version

Sec.
572.140 Incorporation by reference.
572.141 General description.
572.142 Head assembly and test procedure.
572.143 Neck-headform assembly and test procedure.
572.144 Thorax assembly and test procedure.
572.145 Upper and lower torso assemblies and torso flexion test procedure.
572.146 Test condition and instrumentation.

Subpart P—3-year-Old Child Crash Test Dummy, Alpha Version

§ 572.140 Incorporation by reference.

(a) The following materials are hereby incorporated in this subpart P by reference:

(1) A drawings and specifications package entitled ''Parts List and Drawings, Subpart P Hybrid III 3-year-old child crash test dummy, (H–III3C, Alpha version) February 2000'', incorporated by reference in § 572.141 and consisting of :

(i) Drawing No. 210–1000, Head Assembly, incorporated by reference in §§ 572.141, 572.142, 572.144, 572.145, and 572.146;

(ii) Drawing No. 210–2001, Neck Assembly, incorporated by reference in §§ 572.141, 572.143, 572.144, 572.145, and 572.146;

(iii) Drawing No. TE–208–000, Headform, incorporated by reference in §§ 572.141, and 572.143;

(iv) Drawing No. 210–3000, Upper/Lower Torso Assembly, incorporated by reference in §§ 572.141, 572.144, 572.145, and 572.146;

(v) Drawing No. 210–5000–1(L), –2(R), Leg Assembly, incorporated by reference in §§ 572.141, 572.144, 572.145 as part of a complete dummy assembly;

(vi) Drawing No. 210–6000–1(L), –2(R), Arm Assembly, incorporated by reference in §§ 572.141, 572.144, and 572.145 as part of the complete dummy assembly;

(2) A procedures manual entitled ''Procedures for Assembly, Disassembly and Inspection (PADI), Subpart P, Hybrid III 3-year-old Child Crash Test Dummy, (H–III3C, Alpha Version) February 2000'', incorporated by reference in § 572.141;

(3) SAE Recommended Practice J211/1, Rev. Mar 95 ''Instrumentation for Impact Tests—Part 1-Electronic Instrumentation'', incorporated by reference in § 572.146;

(4) SAE J1733 1994–12 ''Sign Convention for Vehicle Crash Testing'' incorporated by reference in § 572.146.

(5) The Director of the Federal Register approved those materials incorporated by reference in accordance with 5 U.S.C. 552(a) and 1 CFR Part 51. Copies of the materials may be inspected at NHTSA's Docket Section, 400 Seventh Street SW, room 5109, Washington, DC, or at the Office of the Federal Register, 800 North Capitol Street, NW, Suite 700, Washington, DC.

(b) The incorporated materials are available as follows:

(1) The drawings and specifications package referred to in paragraph (a)(1) of this section and the PADI document referred to in paragraph (a)(2) of this section are available from Reprographic Technologies, 9000 Virginia Manor Road, Beltsville, MD 20705 (301) 419–5070.

(2) The SAE materials referred to in paragraphs (a)(3) and (a)(4) of this section are available from the Society of Automotive Engineers, Inc., 400

Commonwealth Drive, Warrendale, PA 15096.

§ 572.141 General description

(a) The Hybrid III 3-year-old child dummy is described by the following materials:

(1) Technical drawings and specifications package 210–0000 (refer to § 572.140(a)(1)), the titles of which are listed in Table A of this section;

(2) Procedures for Assembly, Disassembly and Inspection document (PADI) (refer to § 572.140(a)(2)).

(b) The dummy is made up of the component assemblies set out in the following Table A of this section:

TABLE A

Component assembly	Drawing No.
Head Assembly	210–1000
Neck Assembly (complete)	210–2001
Upper/Lower Torso Assembly	210–3000
Leg Assembly	210–5000–1(L), –2(R)
Arm Assembly	210–6000–1(L), –2(R)

(c) Adjacent segments are joined in a manner such that except for contacts existing under static conditions, there is no contact between metallic elements throughout the range of motion or under simulated crash impact conditions.

(d) The structural properties of the dummy are such that the dummy conforms to this part in every respect only before use in any test similar to those specified in Standard 208, *Occupant Crash Protection,* and Standard 213, *Child Restraint Systems.*

§ 572.142 Head assembly and test procedure.

(a) The head assembly (refer to § 572.140(a)(1)(i)) for this test consists of the head (drawing 210–1000), adapter plate (drawing ATD 6259), accelerometer mounting block (drawing SA 572–S80), structural replacement of ½ mass of the neck load transducer (drawing TE–107–001), head mounting washer (drawing ATD 6262), one ½–20x1″ flat head cap screw (FHCS) (drawing 9000150), and 3 accelerometers (drawing SA–572–S4).

(b) When the head assembly in paragraph (a) of this section is dropped from a height of 376.0+/−1.0 mm (14.8+/−0.04 in) in accordance with paragraph (c) of this section, the peak resultant acceleration at the location of the accelerometers at the head CG shall not be less than 250 g or more than 280 g. The resultant acceleration versus time history curve shall be unimodal, and the oscillations occurring after the main pulse shall be less than 10 percent of the peak resultant acceleration. The lateral acceleration shall not exceed +/−15 G (zero to peak).

(c) Head test procedure. The test procedure for the head is as follows:

(1) Soak the head assembly in a controlled environment at any temperature between 18.9 and 25.6 °C (66 and 78 °F) and at any relative humidity between 10 and 70 percent for at least four hours prior to a test.

(2) Prior to the test, clean the impact surface of the head skin and the steel impact plate surface with isopropyl alcohol, trichlorethane, or an equivalent. Both impact surfaces must be clean and dry for testing.

(3) Suspend the head assembly with its midsagittal plane in vertical orientation as shown in Figure P1 of this subpart. The lowest point on the forehead is 376.0±1.0 mm (14.76±0.04 in) from the steel impact surface. The 3.3 mm (0.13 in) diameter holes, located on either side of the dummy's head in transverse alignment with the CG, shall be used to ensure that the head transverse plane is level with respect to the impact surface.

(4) Drop the head assembly from the specified height by a means that ensures a smooth, instant release onto a rigidly supported flat horizontal steel plate which is 50.8 mm (2 in) thick and 610 mm (24 in) square. The impact surface shall be clean, dry and have a finish of not less than 203.2×10^{-6} mm (8 micro inches) (RMS) and not more than 2032.0 x 10^{-6} mm (80 micro inches) (RMS).

(5) Allow at least 2 hours between successive tests on the same head.

§ 572.143 Neck-headform assembly and test procedure.

(a) The neck and headform assembly (refer to §§ 572.140(a)(1)(ii) and 572.140(a)(1)(iii)) for the purposes of this test, as shown in Figures P2 and P3 of this subpart, consists of the neck molded assembly (drawing 210–2015), neck cable (drawing 210–2040), nylon shoulder bushing (drawing 9001373), upper mount plate insert (drawing 910420–048), bib simulator (drawing TE–208–050), urethane washer (drawing 210–2050), neck mounting plate (drawing TE–250–021), two jam nuts (drawing 9001336), load-moment transducer (drawing SA 572–S19), and headform (drawing TE–208–000).

(b) When the neck and headform assembly, as defined in § 572.143(a), is tested according to the test procedure in paragraph (c) of this section, it shall have the following characteristics:

(1) Flexion.

(i) Plane D, referenced in Figure P2 of this subpart, shall rotate in the direction of preimpact flight with respect to the pendulum's longitudinal centerline between 70 degrees and 82 degrees. Within this specified rotation corridor, the peak moment about the occipital condyle may not be less than 42 N-m and not more than 53 N-m.

(ii) The positive moment shall decay for the first time to 10 N-m between 60 ms and 80 ms after time zero.

(iii) The moment and rotation data channels are defined to be zero when the longitudinal centerline of the neck and pendulum are parallel.

(2) Extension.

(i) Plane D referenced in Figure P3 of this subpart shall rotate in the direction of preimpact flight with respect to the pendulum's longitudinal centerline between 83 degrees and 93 degrees. Within this specified rotation corridor, the peak moment about the occipital condyle may be not more than −43.7 N-m and not less than −53.3 N-m.

(ii) The negative moment shall decay for the first time to −10 N-m between 60 and 80 ms after time zero.

(iii) The moment and rotation data channels are defined to be zero when the longitudinal centerline of the neck and pendulum are parallel.

(c) Test Procedure

(1) Soak the neck assembly in a controlled environment at any temperature between 20.6 and 22.2 °C (69 and 72 F) and a relative humidity between 10 and 70 percent for at least four hours prior to a test.

(2) Torque the jam nut (drawing 9001336) on the neck cable (drawing 210–2040) between 0.2 N-m and 0.3 N-m.

(3) Mount the neck-headform assembly, defined in paragraph (a) of this section, on the pendulum so the midsagittal plane of the headform is vertical and coincides with the plane of motion of the pendulum as shown in Figure P2 of this subpart for flexion and Figure P3 of this subpart for extension tests.

(4) Release the pendulum and allow it to fall freely to achieve an impact velocity of 5.50±0.10 m/s (18.05 + 0.40 ft/s) for flexion and 3.65±0.1 m/s (11.98±0.40 ft/s) for extension tests, measured by an accelerometer mounted on the pendulum as shown in Figure 22 of this part 572 at time zero.

(i) The test shall be conducted without inducing any torsion twisting of the neck.

(ii) Stop the pendulum from the initial velocity with an acceleration vs. time pulse which meets the velocity change as specified in Table B of this section. Integrate the pendulum acceleration data channel to obtain the velocity vs. time curve as indicated in Table B of this section.

(iii) Time-zero is defined as the time of initial contact between the pendulum striker plate and the honeycomb material. The pendulum data channel shall be zero at this time.

TABLE B.—PENDULUM PULSE

Time	Flexion		Time	Extension	
ms	m/s	ft/s	ms	m/s	ft/s
10	2.0–2.7	6.6–8.9	6	1.0–1.4	3.3–4.6
15	3.0–4.0	9.8–13.1	10	1.9–2.5	6.2–8.2
20	4.0–5.1	13.1–16.7	14	2.8–3.5	9.2–11.5

§ 572.144 Thorax assembly and test procedure.

(a) Thorax (Upper Torso) Assembly (refer to § 572.140(a)(1)(iv)). The thorax consists of the upper part of the torso assembly shown in drawing 210–3000.

(b) When the anterior surface of the thorax of a completely assembled dummy (drawing 210–0000) is impacted by a test probe conforming to § 572.146(a) at 6.0±0.1 m/s (19.7±0.3 ft/s) according to the test procedure in paragraph (c) of this section.

(1) Maximum sternum displacement (compression) relative to the spine, measured with the chest deflection transducer (SA–572–S50), must not be less than 32mm (1.3 in) and not more than 38mm (1.5 in). Within this specified compression corridor, the peak force, measured by the probe-mounted accelerometer as defined in paragraph § 572.146(a) and calculated in accordance with paragraph (b)(3) of this section, shall be not less than 680 N and not more than 810 N. The peak force after 12.5 mm of sternum compression but before reaching the minimum required 32.0 mm sternum compression shall not exceed 860 N.

(2) The internal hysteresis of the ribcage in each impact, as determined from the force vs. deflection curve, shall be not less than 65 percent and not more than 85 percent. The hysteresis shall be calculated by determining the ratio of the area between the loading and unloading portions of the force deflection curve to the area under the loading portion of the curve.

(3) The force shall be calculated by the product of the impactor mass and its deceleration.

(c) Test procedure. The test procedure for the thorax assembly is as follows:

(1) The test dummy is clothed in cotton-polyester-based tight-fitting shirt with long sleeves and ankle-length pants whose combined weight is not more than 0.25 kg (0.55 lbs)

(2) Soak the dummy in a controlled environment at any temperature between 20.6 and 22.2 °C (69 and 72 °F) and at any relative humidity between 10 and 70 percent for at least four hours prior to a test.

(3) Seat and orient the dummy on a seating surface without back support as shown in Figure P4, with the lower limbs extended horizontally and forward, the upper arms parallel to the torso and the lower arms extended horizontally and forward, parallel to the midsagittal plane, the midsagittal plane being vertical within ±1 degree and the ribs level in the anterior-posterior and lateral directions within ±0.5 degrees.

(4) Establish the impact point at the chest midsagittal plane so that the impact point of the longitudinal centerline of the probe coincides with the dummy's mid-sagittal plane and is centered on the center of No. 2 rib within ±2.5 mm (0.1 in.) and 0.5 degrees of a horizontal plane.

(5) Impact the thorax with the test probe so that at the moment of contact the probe's longitudinal center line is within 2 degrees of a horizontal line in the dummy's midsagittal plane.

(6) Guide the test probe during impact so that there is no significant lateral, vertical or rotational movement.

§ 572.145 Upper and lower torso assemblies and torso flexion test procedure.

(a) The test objective is to determine the resistance of the lumbar spine and abdomen of a fully assembled dummy (drawing 210–0000) to flexion articulation between upper and lower halves of the torso assembly (refer to § 572.140(a)(1)(iv)).

(b)(1) When the upper half of the torso assembly of a seated dummy is subjected to a force continuously applied at the occipital condyle level through the rigidly attached adaptor bracket in accordance with the test procedure set out in paragraph (c) of this section, the lumbar spine-abdomen assembly shall flex by an amount that permits the upper half of the torso, as measured at the posterior surface of the torso reference plane shown in Figure P5 of this subpart, to translate in angular motion in the midsagittal plane 45±0.5 degrees relative to the vertical transverse plane, at which time the pulling force applied must not be less than 130 N (28.8 lbf) and not more than 180 N (41.2 lbf), and

(2) Upon removal of the force, the upper torso assembly returns to within 10 degrees of its initial position.

(c) Test procedure. The test procedure is as follows:

(1) Soak the dummy in a controlled environment at any temperature between 18.9° and 25.6 °C (66 and 78 °F) and at any relative humidity between 10 and 70 percent for at least 4 hours prior to a test.

(2) Assemble the complete dummy (with or without the lower legs) and seat it on a rigid flat-surface table, as shown in Figure P5 of this subpart.

(i) Unzip the torso jacket and remove the four ¼–20×¾″ bolts which attach the lumbar load transducer or its structural replacement to the pelvis weldment (drawing 210–4510) as shown in Figure P5 of this subpart.

(ii) Position the matching end of the rigid pelvis attachment fixture around the lumbar spine and align it over the four bolt holes.

(iii) Secure the fixture to the dummy with the four ¼–20×¾″ bolts and attach the fixture to the table. Tighten the mountings so that the pelvis-lumbar joining surface is horizontal within ±1 deg and the buttocks and upper legs of the seated dummy are in contact with the test surface.

(iv) Attach the loading adapter bracket to the upper part of the torso as shown in Figure P5 of this subpart and zip up the torso jacket.

(v) Point the upper arms vertically downward and the lower arms forward.

(3)(i) Flex the thorax forward three times from vertical until the torso reference plane reaches 30±2 degrees from vertical. The torso reference plane, as shown in figure P5 of this subpart, is defined by the transverse plane tangent to the posterior surface of the upper backplate of the spine box weldment (drawing 210–8020).

(ii) Remove all externally applied flexion forces and support the upper

torso half in a vertical orientation for 30 minutes to prevent it from drooping.

(4) Remove the external support and after two minutes measure the initial orientation angle of the upper torso reference plane of the seated, unsupported dummy as shown in Figure P5 of this subpart. The initial orientation of the torso reference plane may not exceed 15 degrees.

(5) Attach the pull cable at the point of load application on the adaptor bracket while maintaining the initial torso orientation. Apply a pulling force in the midsagittal plane, as shown in Figure P5 of this subpart, at any upper torso flexion rate between 0.5 and 1.5 degrees per second, until the torso reference plane reaches 45±0.5 degrees of flexion relative to the vertical transverse plane.

(6) Continue to apply a force sufficient to maintain 45±0.5 degrees of flexion for 10 seconds, and record the highest applied force during the 10-second period.

(8) Release all force at the loading adaptor bracket as rapidly as possible and measure the return angle with respect to the initial angle reference plane as defined in paragraph (c)(4) of this section 3 to 4 minutes after the release.

572.146 Test conditions and instrumentation.

(a) The test probe for thoracic impacts shall be of rigid metallic construction, concentric in shape, and symmetric about its longitudinal axis. It shall have a mass of 1.70±.01 kg (3.75±0.02 lb) and a minimum mass moment of inertia 283 kg-cm*2 (0.25 lb-in-sec*2) in yaw and pitch about the CG of the probe. ⅓ of the weight of suspension cables and their attachments to the impact probe must be included in the calculation of mass and such components may not exceed five percent of the total weight of the test probe. The impacting end of the probe, perpendicular to and concentric with the longitudinal axis, is at least 25 mm (1.0 in) in length, has a flat, continuous, and non-deformable 50.8±0.2 mm (2.00±0.01 inch) diameter face with a maximum edge radius of 12.7 mm (0.5 in). The probe's end opposite to the impact face has provisions for mounting an accelerometer with its sensitive axis collinear with the longitudinal axis of the probe. No concentric portions of the impact probe may exceed the diameter of the impact face. The impact probe has a free air resonant frequency not less than 1000 Hz.

(b) Head accelerometers shall have the dimensions, response characteristics, and sensitive mass locations specified in drawing SA 572–S4 and be mounted in the head as shown in drawing 210–0000.

(c) The neck force-moment transducer shall have the dimensions, response characteristics, and sensitive axis locations specified in drawing SA 572–S19 and be mounted at the upper neck transducer location as shown in drawing 210–0000. A lower neck transducer as specified in drawing SA 572–S19 is allowed to be mounted as optional instrumentation in place of part No. ATD6204, as shown in drawing 210–0000.

(d) The shoulder force transducers shall have the dimensions and response characteristics specified in drawing SA 572–S21 and be allowed to be mounted as optional instrumentation in place of part No. 210–3800 in the torso assembly as shown in drawing 210–0000.

(e) The thorax accelerometers shall have the dimensions, response characteristics, and sensitive mass locations specified in drawing SA 572–S4 and be mounted in the torso assembly in triaxial configuration at the T4 location, as shown in drawing 210–0000. Triaxial accelerometers may be mounted as optional instrumentation at T1, and T12, and in uniaxial configuration on the sternum at the midpoint level of ribs No. 1 and No. 3 and on the spine coinciding with the midpoint level of No. 3 rib, as shown in drawing 210–0000. If used, the accelerometers must conform to SA–572–S4.

(f) The chest deflection potentiometer shall have the dimensions and response characteristics specified in drawing SA–572–S50 and be mounted in the torso assembly as shown drawing 210–0000.

(g) The lumbar spine force/moment transducer may be mounted in the torso assembly as shown in drawing 210–0000 as optional instrumentation in place of part No. 210–4150. If used, the transducer shall have the dimensions and response characteristics specified in drawing SA–572–S20.

(h) The pubic force transducer may be mounted in the torso assembly as shown in drawing 210–0000 as optional instrumentation in place of part No. 921–0022–036. If used, the transducer shall have the dimensions and response characteristics specified in drawing SA–572–S18.

(i) The acetabulum force transducers may be mounted in the torso assembly as shown in drawing 210–0000 as optional instrumentation in place of part No. 210–4522. If used, the transducer shall have the dimensions and response characteristics specified in drawing SA–572–S22.

(j) The anterior-superior iliac spine transducers may be mounted in the torso assembly as shown in drawing 210–0000 as optional instrumentation in place of part No. 210–4540–1, –2. If used, the transducers shall have the dimensions and response characteristics specified in drawing SA–572–S17.

(k) The pelvis accelerometers may be mounted in the pelvis in triaxial configuration as shown in drawing 210–0000 as optional instrumentation. If used, the accelerometers shall have the dimensions and response characteristics specified in drawing SA–572–S4.

(l) The outputs of acceleration and force-sensing devices installed in the dummy and in the test apparatus specified by this part shall be recorded in individual data channels that conform to the requirements of SAE Recommended Practice J211/1, Rev. Mar 95 ''Instrumentation for Impact Tests—Part 1-Electronic Instrumentation'' (refer to § 572.140(a)(3)), with channel classes as follows:

(1) Head acceleration—Class 1000
(2) Neck
(i) force—Class 1000
(ii) moments—Class 600
(iii) pendulum acceleration—Class 180
(3) Thorax:
(i) rib/sternum acceleration—Class 1000
(ii) spine and pendulum accelerations—Class 180
(iii) sternum deflection—Class 600
(iv) shoulder force—Class 180
(4) Lumbar:
(i) forces—Class 1000
(ii) moments—Class 600
(iii) torso flexion pulling force—Class 60 if data channel is used
(5) Pelvis
(i) accelerations—Class 1000
(ii) acetabulum, pubic symphysis—Class 1000,
(iii) iliac wing forces—Class 180

(m) Coordinate signs for instrumentation polarity shall conform to the Sign Convention For Vehicle Crash Testing, Surface Vehicle Information Report, SAE J1733, 1994–12 (refer to § 572.140(a)(4)).

(n) The mountings for sensing devices shall have no resonance frequency less than 3 times the frequency range of the applicable channel class.

(o) Limb joints shall be set at lG, barely restraining the weight of the limbs when they are extended horizontally. The force required to move a limb segment shall not exceed 2G throughout the range of limb motion.

(p) Performance tests of the same component, segment, assembly, or fully assembled dummy shall be separated in time by a period of not less than 30 minutes unless otherwise noted.

(q) Surfaces of dummy components are not painted except as specified in this part or in drawings subtended by this part.

BILLING CODE 4910–59–P

Figure P1

HEAD DROP TEST SET-UP SPECIFICATIONS

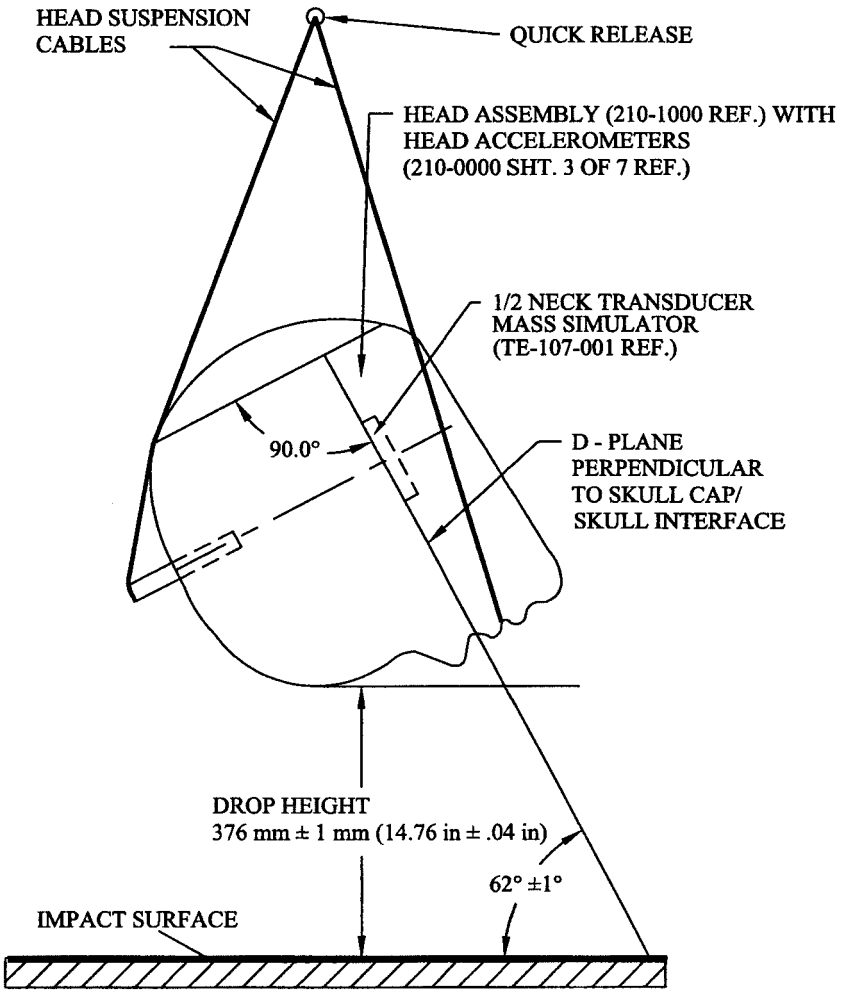

Figure P2

NECK FLEXION TEST SET-UP SPECIFICATIONS

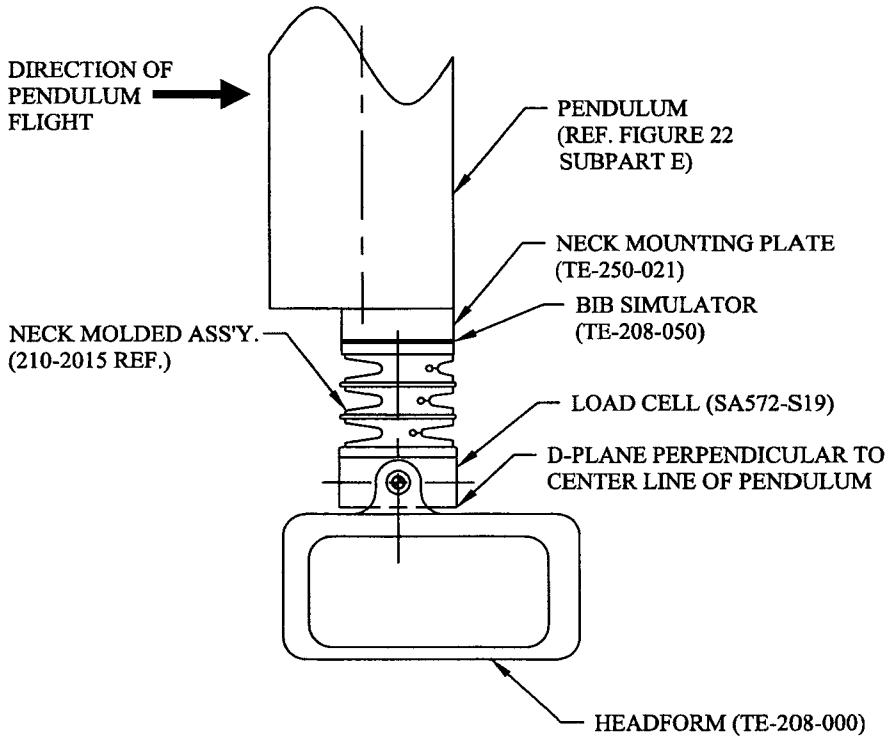

NOTE: MOUNT NECK AT LEADING EDGE OF PENDULUM TO AVOID INTERFERENCE WITH HEADFORM MOTION. PENDULUM SHOWN IN VERTICAL ORIENTATION.

Figure P3

NECK EXTENSION TEST SET-UP SPECIFICATIONS

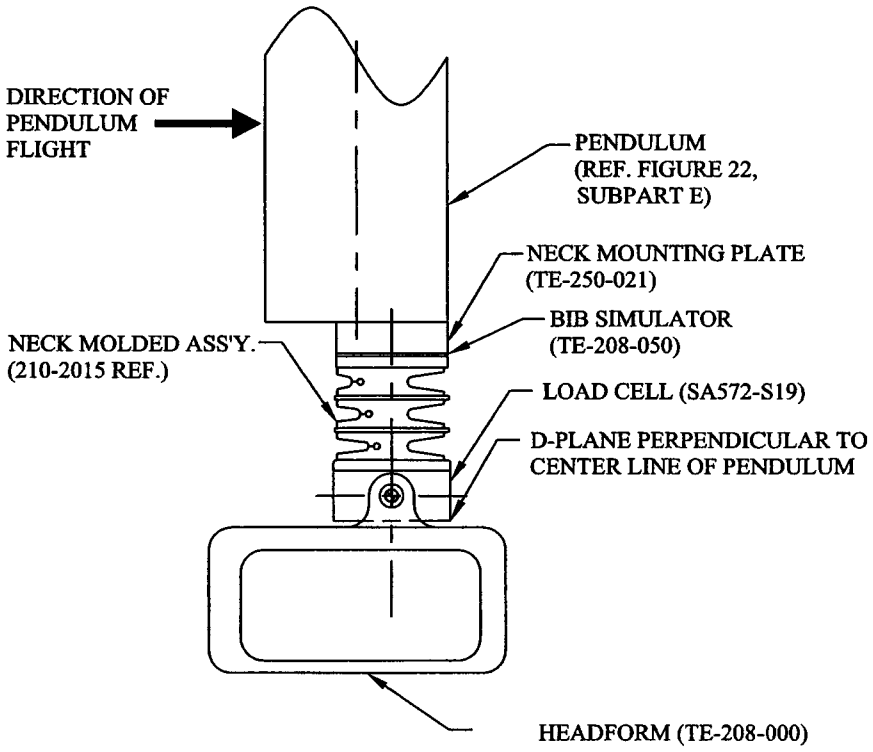

NOTE: MOUNT NECK AT LEADING EDGE OF PENDULUM TO AVOID INTERFERENCE WITH HEADFORM MOTION.
PENDULUM SHOWN IN VERTICAL ORIENTATION.

Figure P4

THORAX IMPACT TEST SET-UP SPECIFICATIONS

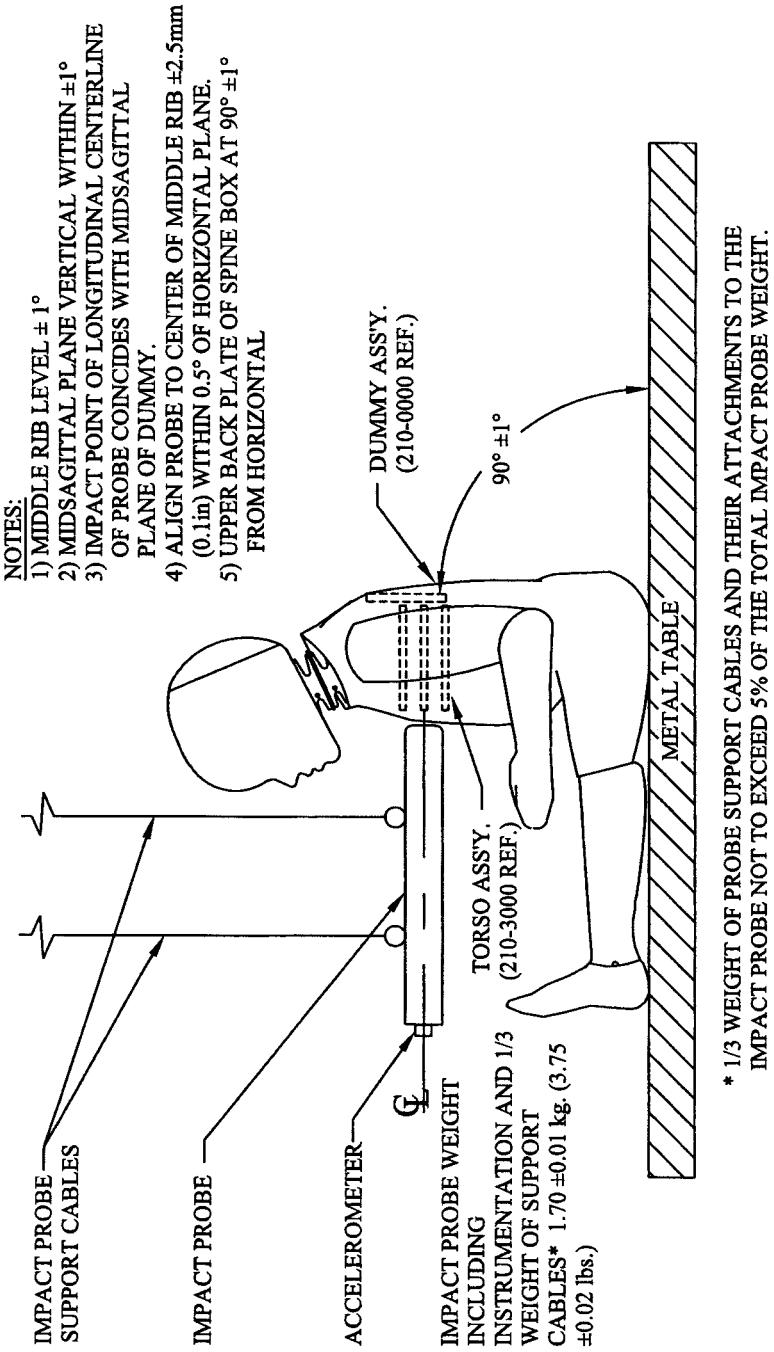

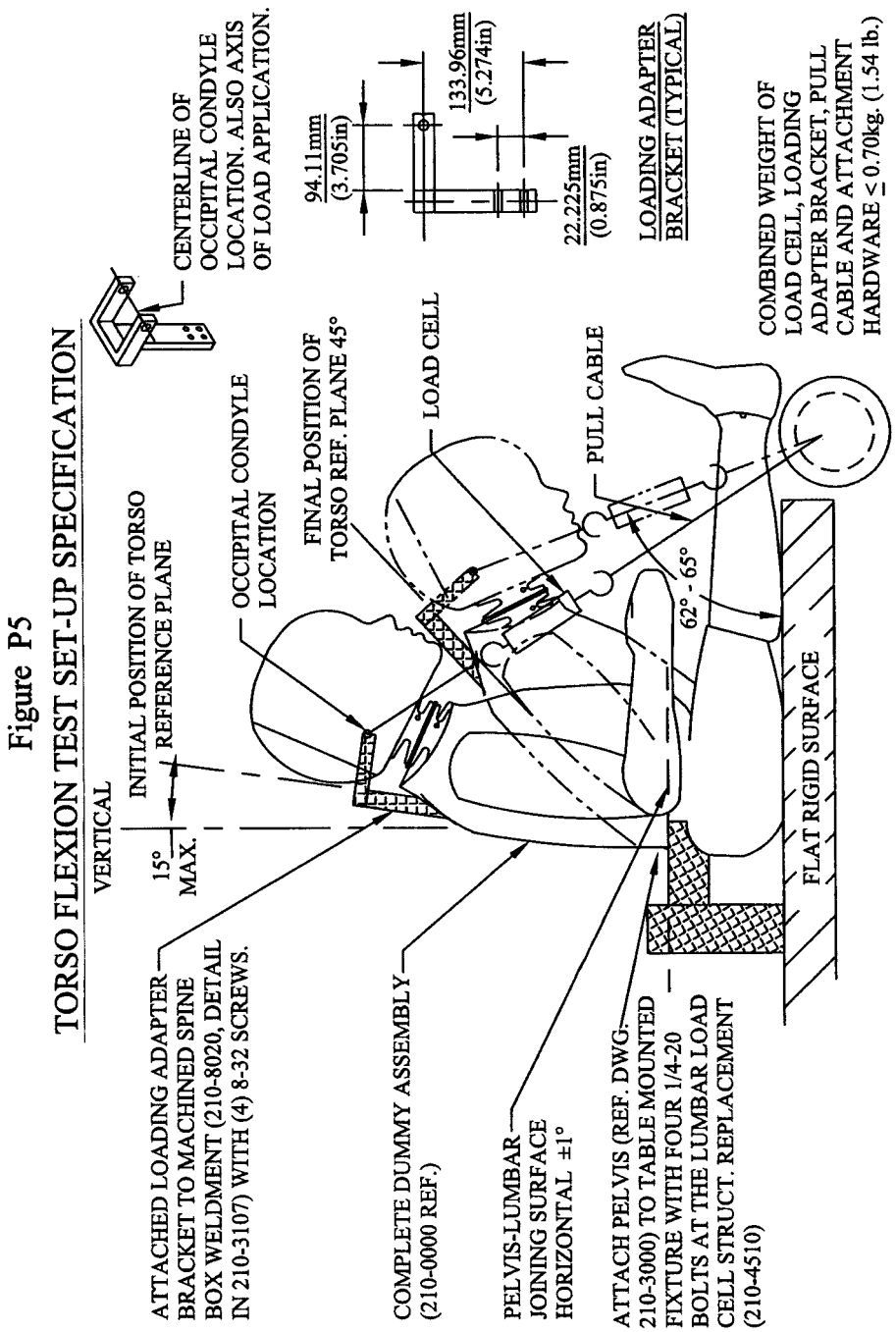

BILLING CODE 4910–59–C

Issued: March 7, 2000.

Rosalyn G. Millman,

Acting Administrator.

[FR Doc. 00–6253 Filed 3–21–00; 8:45 am]

BILLING CODE 4910–59–P

DEPARTMENT OF COMMERCE

National Oceanic and Atmospheric Administration

50 CFR Part 679

[Docket No. 000211039–0039–01; I.D. 031600A]

Fisheries of the Exclusive Economic Zone Off Alaska; Pollock in Statistical Area 630 of the Gulf of Alaska

AGENCY: National Marine Fisheries Service (NMFS), National Oceanic and Atmospheric Administration (NOAA), Commerce.

ACTION: Closure.

SUMMARY: NMFS is prohibiting directed fishing for pollock in Statistical Area 630 outside the Shelikof Strait conservation area in the Gulf of Alaska (GOA). This action is necessary to prevent exceeding the B season allowance of the pollock total allowable catch (TAC) for Statistical Area 630 outside the Shelikof Strait conservation area.

DATES: Effective 1200 hrs, Alaska local time (A.l.t.), March 17, 2000, until 1200 hrs, A.l.t., August 20, 2000.

FOR FURTHER INFORMATION CONTACT: Mary Furuness, 907–586–7228.

SUPPLEMENTARY INFORMATION: NMFS manages the groundfish fishery in the GOA exclusive economic zone according to the Fishery Management Plan for Groundfish of the Gulf of Alaska (FMP) prepared by the North Pacific Fishery Management Council under authority of the Magnuson-Stevens Fishery Conservation and Management Act. Regulations governing fishing by U.S. vessels in accordance with the FMP appear at subpart H of 50 CFR part 600 and 50 CFR part 679.

In accordance with § 679.20(c)(3)(ii), the B season allowance of the pollock TAC in Statistical Area 630 outside the Shelikof Strait conservation area is 2,662 metric tons (mt) as established by the Final 2000 Harvest Specifications for Groundfish (65 FR 8298, February 18, 2000) and subsequent correction (65 FR 11909, March 7, 2000).

In accordance with § 679.20(d)(1)(i), the Administrator, Alaska Region, NMFS (Regional Administrator), has determined that the B season allowance of the pollock TAC in Statistical Area 630 outside the Shelikof Strait conservation area will soon be reached. Therefore, the Regional Administrator is establishing a directed fishing allowance of 2,162 mt, and is setting aside the remaining 500 mt as bycatch to support other anticipated groundfish fisheries. In accordance with § 679.20(d)(1)(iii), the Regional Administrator finds that this directed fishing allowance will soon be reached. Consequently, NMFS is prohibiting directed fishing for pollock in Statistical Area 630 outside the Shelikof Strait conservation area in the GOA.

Maximum retainable bycatch amounts may be found in the regulations at § 679.20(e) and (f).

Classification

This action responds to the best available information recently obtained from the fishery. It must be implemented immediately to prevent overharvesting the seasonal allocation of pollock in Statistical Area 630 outside the Shelikof Strait conservation area. Providing prior notice and an opportunity for public comment is impracticable and contrary to the public interest. Further delay would only result in overharvest. NMFS finds for good cause that the implementation of this action should not be delayed for 30 days. Accordingly, under 5 U.S.C. 553(d), a delay in the effective date is hereby waived.

This action is required by § 679.20 and is exempt from review under E.O. 12866.

Authority: 16 U.S.C. 1801 *et. seq.*

Dated: March 17, 2000.

Bruce C. Morehead,

Acting Director, Office of Sustainable Fisheries, National Marine Fisheries Service.

[FR Doc. 00–7073 Filed 3–17–00; 3:59 pm]

BILLING CODE 3510–22–F

DEPARTMENT OF COMMERCE

National Oceanic and Atmospheric Administration

50 CFR Part 679

[Docket No. 000211039–0039–01; I.D. 031700A]

Fisheries of the Exclusive Economic Zone Off Alaska; Pollock in Statistical Area 610 of the Gulf of Alaska

AGENCY: National Marine Fisheries Service (NMFS), National Oceanic and Atmospheric Administration (NOAA), Commerce.

ACTION: Closure.

SUMMARY: NMFS is prohibiting directed fishing for pollock in Statistical Area 610 of the Gulf of Alaska (GOA). This action is necessary to prevent exceeding the B season allowance of the pollock total allowable catch (TAC) for Statistical Area 610 of the GOA.

DATES: Effective 1200 hrs, Alaska local time (A.l.t.), March 18, 2000, until 1200 hrs, A.l.t., August 20, 2000.

FOR FURTHER INFORMATION CONTACT: Mary Furuness, 907–581–2062.

SUPPLEMENTARY INFORMATION: NMFS manages the groundfish fishery in the GOA exclusive economic zone according to the Fishery Management Plan for Groundfish of the Gulf of Alaska (FMP) prepared by the North Pacific Fishery Management Council under authority of the Magnuson-Stevens Fishery Conservation and Management Act. Regulations governing fishing by U.S. vessels in accordance with the FMP appear at subpart H of 50 CFR part 600 and 50 CFR part 679.

In accordance with § 679.20(c)(3)(ii), the B season allowance of the pollock TAC in Statistical Area 610 is 3,749 metric tons (mt) established by the Final 2000 Harvest Specification for Groundfish (65 FR 8298, February 18, 2000) and subsequent correction (65 FR 11909, March 7, 2000).

In accordance with § 679.20(d)(1)(i), the Administrator, Alaska Region, NMFS (Regional Administrator), has determined that the B season allowance of the pollock TAC in Statistical Area 610 will soon be reached. Therefore, the Regional Administrator is establishing a directed fishing allowance of 3,549 mt, and is setting aside the remaining 200 mt as bycatch to support other anticipated groundfish fisheries. In accordance with § 679.20(d)(1)(iii), the Regional Administrator finds that this directed fishing allowance will soon be reached. Consequently, NMFS is prohibiting directed fishing for pollock in Statistical Area 610 of the GOA.

Maximum retainable bycatch amounts may be found in the regulations at § 679.20(e) and (f).

Classification

This action responds to the best available information recently obtained from the fishery. It must be implemented immediately to prevent overharvesting the seasonal allocation of pollock in Statistical Area 610. Providing prior notice and an opportunity for public comment is impracticable and contrary to the public interest. Further delay would only result in overharvest. NMFS finds for good cause that the implementation of this action should not be delayed for 30 days. Accordingly, under 5 U.S.C. 553(d), a delay in the effective date is hereby waived.

This action is required by § 679.20 and is exempt from review under E.O. 12866.

Authority: 16 U.S.C. 1801 *et seq.*

Dated: March 17, 2000.

George H. Darcy,

Acting Director, Office of Sustainable Fisheries, National Marine Fisheries Service.

[FR Doc. 00–7072 Filed 3–17–00; 3:59 pm]

BILLING CODE 3510–22–F

Proposed Rules

Federal Register
Vol. 65, No. 56
Wednesday, March 22, 2000

This section of the FEDERAL REGISTER contains notices to the public of the proposed issuance of rules and regulations. The purpose of these notices is to give interested persons an opportunity to participate in the rule making prior to the adoption of the final rules.

FEDERAL ELECTION COMMISSION

11 CFR Part 9038

[Notice 2000–5]

Public Funding of Presidential Primary Candidates—Repayments

AGENCY: Federal Election Commission.

ACTION: Notice of disposition; Termination of rulemaking.

SUMMARY: On December 16, 1998, the Commission issued a Notice of Proposed Rulemaking in which it sought public comments on deleting one section of its regulations governing the public financing of presidential primary election campaigns. These rules implement the Presidential Primary Matching Payment Account Act (''Matching Payment Act''), which indicates how funds received under the public financing system may be spent. In addition, the Matching Payment Act requires the Commission to seek repayment from publicly financed campaigns under certain conditions. The rule in question addresses the repayment of federal funds when candidates exceed the limits on either state-by-state or overall spending. The Commission is making no changes to this regulation at this time. Further information is provided in the supplementary information that follows.

FOR FURTHER INFORMATION CONTACT: Ms. Rosemary C. Smith, Assistant General Counsel, 999 E Street, NW, Washington, DC 20463, (202) 694–1650 or toll free (800) 424–9530.

SUPPLEMENTARY INFORMATION: The Commission has been considering whether to revise its regulations at 11 CFR 9038.2(b) governing repayments of matching funds in situations where primary candidates exceed the spending limits set forth in section 441a(b) of the Federal Election Campaign Act, 2 U.S.C. 441a(b) (''FECA''). These regulations implement 26 U.S.C. 9038. For the reasons explained below, the Commission is making no changes at this time to 11 CFR 9038.2(b).

On December 16, 1998, the Commission issued a Notice of Proposed Rulemaking (NPRM) in which it sought comments on proposed revisions to these regulations, as well as on a number of other aspects of the Commission's public funding regulations. 63 FR 69524 (Dec. 16, 1998). In response to the NPRM, written comments addressing the repayment issue were received from Common Cause and Democracy 21 (joint comment); and Lyn Utrecht, Eric Kleinfeld, and Patricia Fiori (joint comment). The Internal Revenue Service stated that it has reviewed the NPRM and finds no conflict with the Internal Revenue Code or regulations thereunder. Subsequently, the Commission reopened the comment period and held a public hearing on March 24, 1999, at which the following witnesses presented testimony on the Commission's ability to seek repayments: Lyn Utrecht (Ryan, Phillips, Utrecht & MacKinnon), Joseph E. Sandler (Democratic National Committee), and Thomas J. Josefiak (Republican National Committee).

Please note that the Commission has already published separately several sets of final rules regarding other aspects of the public funding system. For a summary of these other provisions, *see* Explanation and Justification, 64 FR 49355 (Sept. 13, 1999), and Explanation and Justification, 64 FR 61777 (Nov. 15, 1999).

1. Alternatives Presented in the NPRM

The NPRM raised the issue of whether to delete paragraph (b)(2)(ii)(A) of section 9038.2 from the Commission's regulations. Under this provision, the Commission has in the past required the repayment of primary matching funds based on a determination that a candidate or authorized committee has made expenditures in excess of the primary spending limits. The NPRM raised the argument that this provision is without statutory basis, and that the reading implied in the current regulation is effectively prohibited by the statute. The NPRM noted that this issue has ramifications for excessive expenditures made directly by the candidate's campaign committee from its own funds, as well as excessive expenditures stemming from the campaign committee's acceptance of in-kind contributions, and excessive expenditures arising from primary campaign activities coordinated with the candidate's party committee.

Section 9038 of the Matching Payment Act (26 U.S.C. 9038) provides three bases for determining repayments of primary matching funds: (1) payments in excess of entitlement; (2) payments used for other than qualified campaign expenses; and (3) excess funds remaining six months after the end of the matching payment period. In contrast, section 9007 of the Presidential Election Campaign Fund Act (26 U.S.C 9007) (''Fund Act'') provides four bases for determining repayments of general election funds: (1) Payments in excess of entitlement; (2) an amount equal to any excess qualified campaign expenses; (3) an amount equal to any contributions accepted; and (4) payments used for other than qualified campaign expenses.

The provisions on ''payments in excess of entitlement'' and ''other than qualified campaign expenses'' are nearly identical between the two chapters. Inasmuch as Congress specified ''excess expenses'' as a repayment basis separate from ''other than qualified campaign expenditures'' in the general election statute, an argument exists that the nearly identical provision on ''other than qualified campaign expenses'' in the primary statute cannot reasonably be read to include excess expenses.

The argument against treating ''excess'' campaign expenditures as ''nonqualified'' is buttressed by the text of the ''qualified campaign expense limitation'' (26 U.S.C. 9035) itself, which prohibits candidates from ''knowingly incur[ring] qualified campaign expenses in excess of the expenditure limitation applicable under section 441a(b)(1)(A) of title 2.'' First, one can argue that it is impossible to read this section other than as treating ''excess'' spending as ''qualified.'' Second, this provision states that violation of the primary spending limits is a Title 2 violation, which would be addressed in the FEC's enforcement process, rather than a Title 26 violation, which could be addressed in the audit/repayment process.

The NPRM also set out countervailing arguments in support of retaining 11 CFR 9038.2(b)(2)(ii)(A). While section 9007(b)(2) of the Fund Act clearly states that repayments can be sought from general election candidates who incur

expenses in excess of the aggregate payments to which they are entitled, the Matching Payment Act can be interpreted to set forth repayment requirements for primary candidates that are the equivalent of that general election provision.

A qualified campaign expense of a primary election committee is an expense where ''neither the incurring nor payment * * * constitutes a violation of any law of the United States * * *.'' 26 U.S.C. 9032(9). A Presidential primary candidate who exceeds the expenditure limitations violates two laws, 26 U.S.C. 9035 and 2 U.S.C. 441a(b)(1)(A). Section 9035 of the Matching Payment Act states that ''no candidate shall knowingly incur qualified campaign expenses in excess of the expenditure limitations applicable under section 441a(b)(1)(A) of title 2 * * *.'' Section 441a(b)(1) of the FECA states that ''no candidate for the Office of President who is eligible'' to receive public funds may make expenditures in excess of the statutorily prescribed limitations. 2 U.S.C. 441a(b)(1). Thus, one reading of this language is that expenses in excess of expenditure limitations for publicly funded primary candidates are non-qualified because they violate the law. Consequently, it can be argued that they are repayable under 26 U.S.C. 9038(b)(2). The answer to the argument that the language of section 9035 specifically contemplates that amounts spent in excess of the expenditure limitations can constitute qualified campaign expenses is that the two statutes must be read together, and section 9035 may mean that candidates shall not incur expenses that would otherwise be qualified except for the fact that they exceed the section 441a expenditure limitations.

Additionally, there is a countervailing argument that the Fund Act and the Matching Payment Act mandate identical results—namely, the repayment of expenditures exceeding the spending limits—albeit in slightly different ways. Arguably, there is no provision in the general election Fund Act corresponding to section 9035 of the Matching Payment Act. Consequently, it can be argued that this may be why 26 U.S.C. 9007(b)(2) specifically mandates repayments from general election committees for spending amounts that exceed their entitlements. Under this interpretation, language corresponding to section 9007(b)(2) is not needed in the Matching Payment Act because repayments are already required when primary election committees make non-qualified campaign expenses by violating the law, which they do whenever they exceed the spending limits set forth in 2 U.S.C. 441a(b)(1) and 26 U.S.C. 9035. This reading of the two statutes avoids the anomalous situation that would result if spending limit violations involving candidates who accepted public funding for their primary elections were treated entirely differently than spending limit violations involving the very same candidates during their general election campaigns.

This argument is supported by the court decision in *John Glenn Presidential Committee v. FEC,* 822 F.2d 1097 (D.C. Cir. 1987) (upholding the Commission's repayment determination against a publicly funded primary election candidate for exceeding the state-by-state expenditure limitations in the face of a constitutional challenge). The *Glenn* opinion stated that ''campaign expenses are not 'qualified' if they exceed the limits Congress set, including the limits on spending in each state. 26 U.S.C. 9035(a).'' *Id.* at 1099. *See also, Kennedy for President Committee v. FEC,* 734 F.2d 1558, 1560 n. 1 (D.C. Cir. 1984) (holding that ''[u]nder 26 U.S.C. 9035, campaign expenditures are not 'qualified' if they exceed certain spending limits, including limitations on spending in each state during the presidential primaries''). The state-by-state spending limits at issue in these two cases are in section 441a(b)(1)(A) and (g) of the FECA. These court decisions arguably require the Commission to order repayments of matching funds used for unqualified purposes. *Glenn* at 1099, *Kennedy* at 1561.

With regard to alleged in-kind contributions by third parties such as political party committees, it can be argued that the *Glenn* and *Kennedy* cases are not dispositive because they did not involve third party expenditures, and that these amounts are not necessarily in the same pool of funds from which a publicly funded campaign makes expenditures. The *Glenn* court indicated that it was not ruling on a repayment determination involving private funds. *Glenn* at 1098. However, on the other hand, in-kind contributions to candidates are simultaneously treated as expenditures by those candidates under section 431(8)(A)(i) and (9)(A)(i) of the FECA, and must be reported as both contributions and expenditures under 11 CFR 104.13. In the past, the Commission has considered in-kind contributions to be commingled with a publicly financed candidate's other expenditures and subject to the candidate's expenditure limitations.

2. Public Comments

Two written comments addressing the Commission's statutory authority to seek repayment from Presidential primary committees that exceed the spending limits were received from Common Cause and Democracy 21 (joint comment); and Lyn Utrecht, Eric Kleinfeld, and Patricia Fiori (joint comment). The witnesses who presented testimony on this issue were Lyn Utrecht (Ryan, Phillips, Utrecht & MacKinnon), Joseph E. Sandler (DNC), and Thomas J. Josefiak (RNC).

The bipartisan comments and testimony supported the Commission's authority to obtain repayments for excessive spending by primary candidates' campaign committees using their own funds to exceed the limits. However, two witnesses indicated that they did not believe the Commission has the authority to require a repayment from a Presidential campaign committee based on expenditures made by a party committee, or based on contributors' in-kind contributions, where these expenses were not incurred or accepted by the candidate's campaign committee. One of these witnesses observed that both sections 9002(11) and 9032(9) of Title 26 define ''qualified campaign expense'' to mean an expense ''incurred'' by the candidate or the candidate's authorized committee. Thus, the witness' comment argued that expenditures made by other individuals or entities are not ''qualified campaign expenses'' and cannot form the basis for a repayment determination.

3. Additional Alternative—Repayment of Funds Exceeding Entitlement

After the close of the comment period and the hearing, the Commission considered whether repayments can be required under paragraph (b)(1) of 26 U.S.C. 9038, which addresses the repayment of funds received in excess of the aggregate amount of payments to which the candidate is entitled. The rationale for this approach would be that, since presidential primary candidates and their committees do not receive these matching funds until after they meet or exceed either the state-by-state or the overall spending limits, the campaigns were not entitled to receive these funds in the first place, and therefore must repay these amounts to the Treasury. None of the public comments or testimony addressed the payments-in-excess-of-entitlement theory for repayments under 26 U.S.C. 9038(b)(1) because this approach was not specifically included in the December 1998 NPRM.

4. Conclusion

The Commission has decided to make no changes to the regulation at 11 CFR 9038.2(b), which currently requires publicly funded Presidential primary campaigns to make repayments on the basis of exceeding the Congressionally-mandated spending limits. The current rule is not being changed at this time because there is no consensus in favor of changing the regulation.

Dated: March 17, 2000.

Darryl R. Wold,

Chairman, Federal Election Commission.

[FR Doc. 00–7108 Filed 3–21–00; 8:45 am]

BILLING CODE 6715–01–P

NATIONAL CREDIT UNION ADMINISTRATION

12 CFR Part 742

Regulatory Flexibility and Exemption Program

AGENCY: National Credit Union Administration (NCUA).

ACTION: Advance Notice of proposed rulemaking.

SUMMARY: NCUA is soliciting public comment on whether, and under what circumstances, NCUA should adopt a regulation that would permit credit unions with advanced levels of net worth and consistently strong CAMEL ratings to be exempt, in whole or in part, from certain NCUA regulations that are not specifically required by statute. Comments are also requested on whether the adoption of such a regulation would reduce regulatory burden without adversely affecting safety and soundness. Information from interested parties will assist NCUA in determining whether and in what form to issue a proposed rule on regulatory flexibility.

DATES: The NCUA must receive comments on or before May 22, 2000.

ADDRESSES: Direct comments to Becky Baker, Secretary of the Board. Mail or hand-deliver comments to: National Credit Union Administration, 1775 Duke Street, Alexandria, Virginia 22314–3428, or you may fax comments to (703) 518–6319. *Please send comments by one method only.*

FOR FURTHER INFORMATION CONTACT: Michael J. McKenna, Senior Staff Attorney, Division of Operations, Office of General Counsel, at the above address or telephone: (703) 518–6540 or Herb Yolles, Deputy Director, Office of Examination and Insurance, at the above address or telephone: (703) 518–6360.

SUPPLEMENTARY INFORMATION:

A. Background

NCUA is considering a policy for exempting qualifying credit unions from certain regulatory provisions. The regulatory provisions under consideration are those which are not specifically required by statute and the exemption from which would permit these credit unions greater flexibility in managing their operations. NCUA staff has reviewed agency regulations and has listed, in this advanced notice of proposed rulemaking (ANPR), those regulations which the NCUA Board believes may meet these criteria. The purpose of this ANPR is to elicit public comment on whether the proposed exemptions would in fact be of such benefit and to find out if there are any other regulations or NCUA requirements which credit unions believe should be considered in this proposal.

The NCUA Board believes that safe and sound credit unions with a proven record of effective risk management, as demonstrated by advanced levels of net worth and consistently high CAMEL ratings, may be reasonable candidates for greater regulatory flexibility from certain NCUA regulations which are not specifically required by statute and which have minimal safety and soundness ramifications when applied to federal credit unions with proven risk management records.

In considering this advance notice of proposed rulemaking, the NCUA Board did not include any current regulation which is statutorily imposed and therefore must continue to be implemented by NCUA in a form consistent with the manner specified for implementation when passed by Congress. Likewise, the NCUA Board did not consider a number of other regulations which, although not specifically required by statute, are nonetheless rooted in overriding concern for the overall safety and soundness of the credit union system and, therefore, would not be appropriate for inclusion in a formal regulatory flexibility proposal.

However, internal agency research and evaluation has produced examples of certain specified regulatory restrictions that are not specifically required by statute and may be unnecessary to apply equally to all credit unions based on their individual safety and soundness circumstances, because the regulations, although appropriate for some credit unions, have limited safety and soundness ramifications when applied to federal credit unions with advanced levels of net worth and ongoing strong management performance verified through the examination process and resulting high CAMEL ratings.

The NCUA Board is interested in receiving comments on whether credit unions with a proven track record of favorable performance should be allowed additional regulatory flexibility since their demonstrated ability mitigates the predominance of what limited safety and soundness concerns, if any, might arise from a reduction of certain specified regulatory requirements. Examples of mitigating factors include, but are not limited to, additional capital, strong management and consistent earnings. It is believed that a healthy risk management infrastructure strengthens capital adequacy and diminishes risk to the National Credit Union Share Insurance Fund (NCUSIF).

The NCUA Board is also interested in receiving comment on whether a flexible regulatory approach which results in the removal of selected regulatory obstacles for those credit unions with strong records of safety and soundness and effective risk management will encourage them to strive to maintain and enhance those levels of financial performance as well as to better enable them to remain competitive in the financial marketplace, foster innovation in member service and extend credit to the underserved.

The NCUA Board is interested in whether providing additional flexibility in selected regulatory requirements to credit unions that meet RegFlex triggers might result in a reduction in service within a credit union's field of membership for fear that with additional risk taking, delinquencies might increase and jeopardize the credit union maintaining their CAMEL 1 and 2 ratings.

Would establishing this special class of credit unions to receive different regulatory treatment provide a competitive advantage to RegFlex credit unions over non RegFlex eligible credit unions.

The proposal the NCUA Board is considering would involve an exemption process for qualifying federal credit unions, rather than a regulatory forbearance program available to all federal credit unions. Those federal credit unions that qualify must demonstrate, based on their CAMEL ratings and strong capital positions, that they are capable of managing the additional risks that these regulatory flexibilities may pose. NCUA believes that the proposed qualification and exemption process will effectively

mitigate any additional risk to the NCUSIF.

B. The Regulatory Flexibility (RegFlex) Proposal

The first of the two criteria for eligibility under this proposal, for which comments are requested, is that credit unions must have been rated as CAMEL code 1 or code 2 for two consecutive exams (with a Camel code 1 or 2 in management). NCUA has a decreased safety and soundness concern for these credit unions because it has been suggested that such credit unions are characterized by:

- Performance that consistently provides for safe and sound operations;
- Positive historical and projected key performance measures; and
- The ability to withstand business fluctuations.

The second criterion for this proposal is that a credit union must have net worth of 9% or greater, and is determined to be well-capitalized under Part 702 of NCUA's regulations. It has been suggested that generally, this indicates that a credit union has both demonstrated the ability to build capital and has accumulated at least a 200-basis point cushion over the minimum level to be classified as well-capitalized under the NCUA's recently adopted prompt corrective action regulation. This cushion of 200 basis points or greater represents a significant decrease in risk to both the credit union and the NCUSIF. The NCUA Board is also requesting comment on whether the capital trigger for complex credit unions should be different and if so, what criteria should be used.

It is assumed that credit unions which qualify for this proposal clearly represent a reduced safety and soundness risk. They have a proven track record that mitigates safety and soundness concerns and have capital levels that decrease any minimal additional risk this regulatory flexibility proposal may present. Is this an assumption upon which the RegFlex proposal should be based?

For the reasons discussed above, the NCUA Board is requesting comment on a proposed regulation that would exempt credit unions that have maintained a CAMEL 1 or 2 and a net worth of 9% for two consecutive exams from all or part of certain NCUA regulations. The NCUA Board is requesting comment on two approaches for granting this authority. The first option is that any credit union that meets this criteria will automatically be exempt from all or specified parts of the identified regulatory provisions in the proposed RegFlex regulation. All of the affected NCUA regulations or specific provisions of regulations would be set forth in the RegFlex regulation. The second option is for a formal approval and designation process by the region before the credit union could engage in these RegFlex activities. As part of the application process the credit union would need to note if there had been any recent changes in senior management. In addition, if a credit union is approved for RegFlex it would have to notify the region whenever there is a subsequent change in senior management or a material financial event that impacts capital.

It is proposed that a regional director, in his or her sole discretion, for substantive and documented safety and soundness reasons, would be authorized to revoke the RegFlex authority in whole or in part at any time and without advance notice. In such cases, the credit union would be able to appeal such a determination to NCUA's Supervisory Review Committee within 60 days of the regional director's determination. NCUA realizes that if this proposal is adopted it will have to modify the interpretive ruling and policy statement regarding the Supervisory Review Committee.

C. Potential Regulations NCUA Has Initially Identified as Part of the Proposal

(1) Section 701.36—FCU Ownership of Fixed Assets

NCUA originally proposed a fixed asset rule in 1979. The regulation was intended to ensure that the officials of FCUs had considered all relevant factors prior to committing large sums of members' funds to the acquisition of fixed assets. The final regulation attempted to accomplish this by requiring credit unions to seek the written approval of NCUA before investing in fixed assets in excess of 5% of their assets. The approval process was established so that the form and content of the request would contain sufficient information to establish the need for and the feasibility of the request and to determine the impact of the proposal on the credit union's operations. When the rule was revised in 1984, NCUA cited some ongoing concerns at that time about potential credit union losses if credit unions with insufficient capital were to invest in fixed assets disproportionate to their restricted capital position. Therefore, the requirement that a credit union receive NCUA approval if it wishes to invest in an aggregate total of fixed assets that exceeds 5 percent of shares and retained earnings was incorporated in the 1984 revision.

Since that time losses have been negligible and credit union capital positions have increased from an average capital ratio of 6.8% in December 1984 to 11.7% in December 1999. However, many credit unions have been required to seek NCUA approval to exceed the regulatory limit in order to more effectively serve their field of membership or to extend the level of service to underserved areas. Such approvals have been granted on a regular basis to credit unions with strong capital ratios and proven records of risk management. Although often granted to credit unions who are willing to go through the time-consuming advance approval process, it is likely that some credit unions may have been deterred from extending their service to some within their field of membership or to underserved areas because of this advance waiver regulatory requirement. Since capital position and CAMEL rating are among the key indices used to evaluate a credit union's application in making such an advance waiver request, it seems that this regulatory requirement would be an ideal candidate to streamline for those credit unions who meet the capital and CAMEL based RegFlex criteria. It is the view of the NCUA Board that some exemption from the fixed asset rule for credit unions who have proven their ability to adequately manage a higher level of investment in fixed assets would serve to better enable those credit unions to serve their members more effectively and extend service to underserved areas.

Should a credit union not have to apply for a waiver provided for in Section 701.36(c) if they meet the requirements of the RegFlex proposal? Should a credit union's investment in fixed assets have no regulatory cap? Should credit unions as a sound business practice have in their written business plan their own fixed asset limit? As an impact of such an exemption, it should be noted that, some of the restrictions on purchasing a building and leasing a portion of the property, until it was fully utilized by the credit union, would also be lifted. However, this would not authorize a credit union to engage in long-term commercial leasing. For safety and soundness reasons and legal reasons the credit union would still need to have a reasonable plan to fully utilize the property. Is this a reasonable application of the RegFlex exemption?

(2) Part 703—Investment and Deposit Activities

NCUA is considering whether to include various sections of Part 703, Investment and Deposit Activities, in

the proposal. Part 703, effective January 1, 1998, recognized that advances in modeling and measuring risk factors permitted institutions to better understand and manage their risk profile. NCUA shifted the regulatory focus from emphasis on specific investments to the characteristics that affect risk management of investment activity, including credit union board and staff understanding of the potential risk associated with the credit union's investment activities. The rule established parameters for risk assessment and permits credit union operating flexibility within those parameters. At the same time, it minimized the regulatory burden on those credit unions that choose to maintain a simple portfolio of investments.

In October, 1998, the NCUA Board approved, as Interpretive Ruling and Policy Statement No. 98–2, the FFIEC Policy Statement on Investment Securities and End-User Derivative Activities. This statement emphasizes sound business practices for managing the risks of investment activities. Board and senior management oversight is an integral part of an effective risk management program. An effective risk management system also includes: (1) Policies, procedures, and limits; (2) the identification, measurement, and reporting of risk exposures; and (3) a system of internal controls. This policy statement eliminated the FFIEC High Risk Security Test for CMOs as a supervision tool and recognized that institutions should be valuing the price sensitivity of their investments prior to purchase and on an ongoing basis.

Technology continues to improve a credit union's ability to measure risk. The regulatory focus continues to migrate toward risk assessment of internal controls and evaluation of management processes. Those institutions that have developed sound business practices in their risk management processes can assume a higher risk profile. The NCUA Board is requesting comment on whether the investment requirements should be modified for credit unions that meet the criteria set forth in this proposal and demonstrate the ability to manage the increased risk, or should Part 703 be modified to allow all credit unions the authority to have increased flexibility, or should NCUA make no regulatory changes?

Section 703.90 requires quarterly stress testing (300 basis point shock) of individual complex securities if the total sum of complex securities, as defined by the investment regulation, exceed net capital. For those credit unions that measure the impact of interest rate changes on their entire balance sheet, should NCUA waive or modify this regulatory requirement?

Section 703.40(c)(6) limits the discretionary delegation of investments to third parties to 100 percent of net capital. Should NCUA waive or modify the 100 percent limitation and permit credit unions to set the limit by board policy for credit unions?

Section 703.110(d) limits zero coupon investments to under 10 years from settlement date. Should NCUA extend this maturity? If so, what limitations should be set, if any? How should credit unions assess this risk?

Section 703.110 prohibits stripped, mortgage-backed securities, residual interests in CMOs/REMICS, mortgage servicing rights, commercial mortgage-related securities, or small business related securities. NCUA is interested in comments on whether this section should be part of the proposal or otherwise modified. If so, would these vehicles play an active role in your portfolio? Are there specific risks that need to be addressed? If authorized, should NCUA limit this activity in relation to capital?

The investment area is of particular concern for safety and soundness reasons. If the eligibility for expanded investment authority is limited to credit unions meeting the RegFlex criteria, should that authority be automatic or should an application and approval process be required of those credit unions which desire such expanded investment authority? Are there any other provisions of Part 703 that NCUA should consider for this proposal?

(3) Section 701.25—Charitable Donations

The original requirements on charitable donations were set forth in Interpretive Ruling and Policy Statement (IRPS) 79–6. The original requirements were imposed to provide guidance regarding charitable donations since there were many questions about what was permissible. In 1999, the NCUA Board incorporated the IRPS into NCUA's regulation and substantially deregulated the requirements. The current rule limits recipients of charitable donations to organizations located in or conducting activities in a community in which the FCU has a place of business. Furthermore, the board of directors must approve charitable contributions, and the approval must be based on a determination by the board of directors that the contributions are in the best interests of the federal credit union and are reasonable given the size and financial condition of the federal credit union. Should credit unions meeting the RegFlex criteria be completely exempt from the requirements of this regulation?

(4) Section 722.3(a)(1)—Appraisals

The appraisal regulation was mandated for all federal financial institution regulatory agencies by FIRREA in 1989. NCUA adopted its final regulation in 1990. NCUA's current regulation is more restrictive than the other financial institution regulators because of the unique nature of credit unions. However, experience has demonstrated that certain credit unions are able to adequately manage a higher degree of risk in making loans without an appraisal. Therefore, should credit unions meeting the RegFlex criteria be allowed to increase the dollar threshold from $100,000 to $250,000 for when an appraisal is required? Such an increase would be consistent with the regulatory authority set forth by the appropriate agencies regulating banks and thrifts. Furthermore, the threshold for an appraisal for a member business loan would be increased to $250,000 if it involves real estate. However, in both loan categories, the loan must still be supported by a written estimate of market value as set forth in Section 723.3(d) of NCUA's regulation. Finally, are there any other provisions in Part 722 that NCUA should consider for this proposal?

(5) Section 701.32 (b) and (c)—Payment on Shares by Public Unit and Nonmembers

The limitation on public unit and nonmember shares was adopted by the NCUA Board in 1989 because of abuses by certain credit unions and significant losses suffered by the NCUSIF. In 1994, the NCUA Board increased the dollar thresholds in these types of shares. The current regulation limits the maximum amount of all public unit and nonmember shares to 20% of total shares of the federal credit union or $1.5 million, whichever is greater. Recent experience indicates that certain credit unions may be able to adequately manage the increased risks posed by these type of shares. Therefore, should credit unions meeting the RegFlex criteria be exempt from the regulatory restrictions on public unit funds and nonmember shares (nonmember shares may be accepted by low-income credit unions)?

(6) Section 701.23—Purchase, Sale and Pledge of Eligible Obligations

The NCUA Board seeks comment on whether it should permit credit unions

that meet the RegFlex criteria to purchase any auto loan, credit card loan, member business loan, student loan or mortgage loan from any other credit union as long as they are loans the purchasing credit union is empowered to grant. If authorized, should the purchasing credit union be permitted to keep these loans in their portfolios? Should this change be applicable to all credit unions? Finally, are there any other issues in managing a loan portfolio that should be addressed in this section or section 701.21?

D. Request for Comment on Related Issues

Should the asset base of a credit union which expands into a low-income or underserved area be frozen for the calculation of the operating fee. If so, for what amount of time? Should there be some minimum threshold on the size of the underserved area in order for the credit union to be eligible for this treatment? If the credit union subsequently adds another underserved area, after the specified time, to its field of membership, should its assets be readjusted and frozen for another period of time in the calculation for the credit union's operating fee?

The NCUA Board also seeks comment on whether the regulatory flexibility outlined in this proposal should be used as an incentive to encourage eligible credit unions to continue serving low-income individuals within their field of membership or to add an underserved area or low-income groups to their field of membership. This could be accomplished by including low-income or underserved area as one of the basic eligibility criteria under the proposal. The NCUA Board is also requesting comment on whether there are any other incentives or areas of regulatory flexibility that may be granted to federal credit unions to encourage them to expand into underserved areas.

The NCUA Board recently issued an advance notice of proposed rulemaking at the November Board meeting. 64 FR 66413 (November 26, 1999). The Board stated that it is considering expanding its view of the incidental powers of a federal credit union. *Id.* at 66414. The Board may consider it necessary to limit or restrict some activities that may be permissible as an incidental power because of safety and soundness concerns. In connection with RegFlex, the Board believes it may be appropriate to permit federal credit unions meeting the RegFlex criteria to engage in incidental power activities without the restrictions that would be generally applicable to other federal credit unions. However, since a proposed rule for Part 721 is presently scheduled to be issued this summer, further details on how the revised rule may be incorporated, if appropriate, into the RegFlex approach will be set forth in the proposed RegFlex rule.

Proposed Part 714 on leasing was issued by the NCUA Board in the fall of 1999. 64 FR 55866 (October 15, 1999). The NCUA Board expects a final rule will be presented at the May Board meeting. In connection with RegFlex, the Board requests comment on whether it may be appropriate to permit federal credit unions meeting the RegFlex criteria to engage in certain leasing activities without the restrictions that would be generally applicable to other federal credit unions but that are not legally required.

The NCUA Board is also requesting comment on what changes, if any, might be considered to NCUA's supervision and examination program for credit unions meeting the RegFlex criteria. Possible areas of consideration are a different type of exam for RegFlex credit unions or a revised examination schedule for RegFlex credit unions.

What guidance should the NCUA Board provide to examiners to ensure that credit unions are not discouraged from responsibly managing additional risk in an effort to provide credit to a broader range of its members? For instance, should peer comparisons be dropped? Should delinquency and charge-off rates be more liberally approached during examinations? If so, is there a numerical rate that should be considered acceptable?

The NCUA Board is also requesting comment on any other regulatory or supervisory issues that might be good candidates for RegFlex. Please do not comment on regulations which are statutory or provisions that are mandated by statutory requirements. These cannot and will not be included in any final RegFlex regulation approved by the NCUA Board. Among others, examples of such statutory regulations and provisions include Truth-In-Savings (Part 707), the aggregate loan limit in the member business loan rule (Part 723) or the 1% loan and investment limit in the CUSO rule (Part 712). Furthermore, please do not comment on regulations that NCUA does not issue or control such as Regulation B or Regulation Z which are issued by the Board of Governors of the Federal Reserve System.

By the National Credit Union Administration Board on March 16, 2000.

Becky Baker,

Secretary of the Board.

[FR Doc. 00–7040 Filed 3–21–00; 8:45 am]

BILLING CODE 7535–01–P

DEPARTMENT OF TRANSPORTATION

Federal Aviation Administration

14 CFR Part 39

[Docket No. 2000–CE–02–AD]

RIN 2120–AA64

Airworthiness Directives; Raytheon Aircraft Company Beech Models 1900C, 1900C (C–12J), and 1900D Airplanes

AGENCY: Federal Aviation Administration, DOT.

ACTION: Notice of proposed rulemaking (NPRM).

SUMMARY: This document proposes to adopt a new airworthiness directive (AD) that would apply to certain Raytheon Aircraft Company (Raytheon) Beech Models 1900C, 1900C (C–12J), and 1900D airplanes. The proposed AD would require you to install a spiral wrap around the wing fuel quantity wiring harness and apply an adhesive sealant to the Wiggins couplings on the internal fuel tank wiring carry-through conduit. The proposed AD results from reports of chafed or shorted wing fuel quantity harness wires on the affected airplanes. These occurrences were found during regular maintenance inspections. The actions specified by the proposed AD are intended to:

—prevent chafing between the wing fuel quantity wiring harness and the internal wing harness supports at each wing rib location, which could cause the fuel quantity indication to become unreliable. This could leave the flight crew without an indication of the amount of fuel the airplane has during flight; and

—prevent fuel from leaking through the wiring carry-through conduit and into the wing tip or wheel well area, which could lead to a fire or explosion.

DATES: The Federal Aviation Administration (FAA) must receive any comments on this rule on or before May 19, 2000.

ADDRESSES: Submit comments in triplicate to FAA, Central Region, Office of the Regional Counsel, Attention: Rules Docket No. 2000-CE–02–AD, 901 Locust, Room 506, Kansas City, Missouri 64106.

You may get the service information referenced in the proposed AD from the Raytheon Aircraft Company, PO Box 85, Wichita, Kansas 67201–0085; telephone: (800) 625–7043 or (316) 676–4556. You may examine this information at the Rules Docket at the address above.

FOR FURTHER INFORMATION CONTACT: Mr. Jeff Pretz, Aerospace Engineer, Wichita Aircraft Certification Office, FAA, 1801 Airport Road, Mid-Continent Airport, Wichita, Kansas 67209; telephone: (316) 946–4153; facsimile: (316) 946–4407.

SUPPLEMENTARY INFORMATION:

Comments Invited

The FAA invites comments on the proposed rule. You may submit whatever written data, views, or arguments you choose. You need to include the rule's docket number and submit your comments in triplicate to the address specified under the caption **ADDRESSES**. We will consider all comments received on or before the closing date specified above, before taking action on the proposed rule. We may change the proposals contained in this notice in light of the comments received.

The FAA is re-examining the writing style we currently use in regulatory documents, in response to the Presidential memorandum of June 1, 1998. That memorandum requires federal agencies to communicate more clearly with the public. We are interested in your comments on whether the style of this document is clearer, and any other suggestions you might have to improve the clarity of FAA communications that affect you. You can get more information about the Presidential memorandum and the plain language initiative at *http://www.plainlanguage.gov.*

The FAA specifically invites comments on the overall regulatory, economic, environmental, and energy aspects of the proposed rule that might necessitate a need to modify the proposed rule. You may examine all comments we receive before and after the closing date for comments in the Rules Docket. We will file a report in the Rules Docket that summarizes each FAA contact with the public that concerns the substantive parts of this proposal.

If you want us to acknowledge the receipt of your comments, you must include a self-addressed, stamped postcard. On the postcard, write ''Comments to Docket No. 2000–CE–02–AD.'' We will date stamp and mail the postcard back to you.

Availability of NPRMs

You may obtain a copy of this NPRM by submitting a written request to FAA, Central Region, Office of the Regional Counsel, Attention: Rules Docket No. 2000–CE–02–AD, 901 Locust, Room 506, Kansas City, Missouri 64106.

Discussion

What events have caused the proposed rule? Several operators of Raytheon Beech Models 1900C and 1900D airplanes have reported chafing of the wing fuel quantity wiring harness against the wing fuel quantity wiring harness supports (located at the wing wiring harness lighting hole mounts). The condition is also conducive to the Model 1900C (C–12J) airplanes.

The lightning hole mounts at each wing rib support the wing fuel quantity wiring harness. The following could occur and cause the above-referenced condition:

—Vibration and fuel movement cause the insulation on the wiring harness to chafe on the tie straps used to secure the harness to the lightning hole mounts; and

—Exposed conductors of the wiring harness could then contact each other and result in an incorrect fuel quantity indication or the indicator reading zero.

In addition to the above condition on the Raytheon Beech Models 1900C, 1900C (C–12J), and 1900D airplanes, the O-rings in Wiggins couplings that join the electrical conduit internal to the wing fuel tanks could leak and allow fuel to enter the conduit. This could result in a fire or explosion.

What are the consequences if the conditions are not corrected? If not corrected in a timely manner, the above-referenced conditions could result in the following:

—Chafing between the wing fuel quantity wiring harness and the internal wing harness supports at each wing rib location could cause the fuel quantity indication to become unreliable. This could leave the flight crew without an indication of the amount of fuel in the airplane during flight; and

—Fuel leaking through the wiring carry-through conduit and into the wing tip or wheel well area could lead to a fire or explosion.

Relevant Service Information

Is there service information that applies to this subject? Yes. Raytheon has issued Mandatory Service Bulletin No. SB 28–3299, Issued: December, 1999.

What are the provisions of this service bulletin? The service bulletin includes procedures for:

—Installing a spiral wrap around the wing fuel quantity wiring harness; and

—Applying an adhesive sealant to the Wiggins couplings on the internal fuel tank wiring carry-through conduit.

The FAA's Determination and an Explanation of the Provisions of the Proposed AD

What has the FAA decided? After examining the circumstances and reviewing all available information related to the incidents described above, including the relevant service information, FAA has determined that:

—An unsafe condition is likely to exist or develop in other Raytheon Beech Models 1900C, 1900C (C–12J), and 1900D airplanes of the same type design;

—The actions of the above-referenced service bulletin should be accomplished on the affected airplanes; and

—AD action should be taken to prevent the above-referenced conditions from occurring.

What would the proposed AD require? The proposed AD would require you to:

—Install a spiral wrap around the wing fuel quantity wiring harness; and

—Apply an adhesive sealant to the Wiggins couplings on the internal fuel tank wiring carry-through conduit.

Compliance Time of This Proposed AD

What is the compliance time of this proposed AD? The compliance time in the proposed AD is whichever of the following that occurs first:

—Within the next 3 months after the effective date of this AD; or

—Within the next 600 hours time-in-service (TIS) after the effective date of this AD.

Why is the compliance time in both calendar time and hours TIS? Chafing damage is a direct result of airplane usage; however, the fuel leakage problem could result regardless of whether the airplane is utilized. Therefore, to assure that both problems are address in a timely manner without inadvertently grounding any of the affected airplanes, we are utilizing a compliance based upon both hours TIS and calendar time.

Cost Impact

How many airplanes does this proposed AD impact? The FAA estimates that 303 airplanes in the U.S. registry would be affected by the proposed AD.

What is the cost impact of the affected airplanes on the U.S. Register? We estimate that it would take approximately 10 workhours per airplane to accomplish the proposed actions, and that the average labor rate is approximately $60 an hour. There is no cost for parts to accomplish the proposed actions.

Based on these figures, we estimate the total cost impact of the proposed AD on U.S. operators to be $181,800, or $600 per airplane.

Regulatory Impact

These proposed regulations would not have a substantial direct effect on the States, on the relationship between the national government and the States, or on the distribution of power and responsibilities among the various levels of government. Therefore, FAA determines that this proposed rule would not have federalism implications under Executive Order 13132.

For the reasons discussed above, I certify that this action (1) is not a ''significant regulatory action'' under Executive Order 12866; (2) is not a ''significant rule'' under DOT Regulatory Policies and Procedures (44 FR 11034, February 26, 1979); and (3) if promulgated, will not have a significant economic impact, positive or negative, on a substantial number of small entities under the criteria of the Regulatory Flexibility Act. The FAA has placed a copy of the draft regulatory evaluation prepared for this action in the Rules Docket. You may contact the Rules Docket (at the location provided under the caption **ADDRESSES**) to get a copy of this evaluation.

List of Subjects in 14 CFR Part 39

Air transportation, Aircraft, Aviation safety, Safety.

The Proposed Amendment

Accordingly, under the authority delegated to me by the Administrator, the Federal Aviation Administration proposes to amend part 39 of the Federal Aviation Regulations (14 CFR part 39) as follows:

PART 39—AIRWORTHINESS DIRECTIVES

1. The authority citation for part 39 continues to read as follows:

Authority: 49 U.S.C. 106(g), 40113, 44701.

§ 39.13 [Amended]

2. FAA amends Section 39.13 by adding a new airworthiness directive (AD) to read as follows:

Raytheon Aircraft Company (Type Certificate No. A24CE formerly held by the Beech Aircraft Corporation):

Docket No. 2000–CE–02–AD.

(a) *What airplanes are affected by this AD?* This AD affects the following airplanes, certificated in any category:

(1) Part I of this AD: Wing fuel quantity wiring harness attachment improvement.

Model	Serial No.
1900C	UC–1 through UC–174.
1900C (C–12J)	UD–1 through UD–6.
1900D	UE–1 through UE–331.

(2) Part II of this AD: Wiggins coupling adhesive sealing.

Model	Serial No.
1900C	UC–1 through UC–174.
1900C (C–12J)	UD–1 through UD–6.
1900D	UE–1 through UE–354.

(b) *Who must comply with this AD?* Anyone who wishes to operate any of the above airplanes on the U.S. Register must comply with this AD.

(c) *What problem does this AD address?* The actions specified by this AD are intended to prevent the following:

(1) Part I of this AD: chafing between the wing fuel quantity wiring harness and the internal wing harness supports at each wing rib location, which could cause the fuel quantity indication to become unreliable. This could leave the flight crew without an indication of the amount of fuel the airplane has during flight; and

(2) Part II of this AD: fuel from leaking through the wiring carry-through conduit and into the wing tip or wheel well area, which could lead to a fire or explosion.

(d) *What must I do to address this problem?* To address this problem, you must accomplish the following actions:

(1) Part I of this AD: Install a spiral wrap around the wing fuel quantity wiring harness; and

(2) Part II of this AD: Apply an adhesive sealant to the Wiggins couplings on the internal fuel tank wiring carry-through conduit.

(e) *What is the compliance time of all actions of this AD?* You must accomplish all actions of this AD at whichever of the following times that occurs first:

(1) Within the next 3 calendar months after the effective date of this AD; or

(2) Within the next 600 hours time-in-service (TIS) after the effective date of this AD.

(f) *What procedures must I use to accomplish the actions required in this AD?* You must use the procedures in Raytheon Mandatory Service Bulletin No. SB 28–3299, Issued: December, 1999, to accomplish the actions of this AD.

(g) *Can I comply with this AD in any other way*? Yes.

(1) You may use an alternative method of compliance or adjust the compliance time if:

(i) Your alternative method of compliance provides an equivalent level of safety; and

(ii) The Manager, Wichita Aircraft Certification Office (ACO), approves your alternative. Submit your request through an FAA Principal Maintenance Inspector, who may add comments and then send it to the Manager, Wichita ACO.

(2) This AD applies to each airplane identified in the preceding applicability provision, regardless of whether it has been modified, altered, or repaired in the area subject to the requirements of this AD. For airplanes that have been modified, altered, or repaired so that the performance of the requirements of this AD is affected, the owner/operator must request approval for an alternative method of compliance in accordance with paragraph (g)(1) of this AD. The request should include an assessment of the effect of the modification, alteration, or repair on the unsafe condition addressed by this AD; and, if you have not eliminated the unsafe condition, specific actions you propose to address it.

(h) *Where can I get information about any already-approved alternative methods of compliance*? Contact Jeff Pretz, Aerospace Engineer, Wichita Aircraft Certification Office, FAA, 1801 Airport Road, Mid-Continent Airport, Wichita, Kansas 67209; telephone: (316) 946–4153; facsimile: (316) 946–4407.

(i) *What if I need to fly the airplane to another location to comply with this AD*? The FAA can issue a special flight permit under sections 21.197 and 21.199 of the Federal Aviation Regulations (14 CFR 21.197 and 21.199) to operate your airplane to a location where you can accomplish the requirements of this AD.

(j) *Who should I contact if I have questions regarding the service information*? Questions or technical information related to Raytheon Mandatory Service Bulletin No. SB 28–3299, Issued: December, 1999, should be directed to Raytheon Aircraft Corporation, P.O. Box 85, Wichita, Kansas 67201–0085. This service information may be examined at the FAA, Central Region, Office of the Regional Counsel, 901 Locust, Room 506, Kansas City, Missouri 64106.

Issued in Kansas City, Missouri, on March 14, 2000.

Carolanne L. Cabrini,

Acting Manager, Small Airplane Directorate, Aircraft Certification Service.

[FR Doc. 00–7091 Filed 3–21–00; 8:45 am]

BILLING CODE 4910–13–U

DEPARTMENT OF TRANSPORTATION

Federal Aviation Administration

14 CFR Part 39

[Docket No. 99–SW–37–AD]

Airworthiness Directives; Sikorsky Aircraft Corporation (Sikorsky) Model S–76A Helicopters

AGENCY: Federal Aviation Administration, DOT.

ACTION: Notice of proposed rulemaking (NPRM).

SUMMARY: This document proposes adopting a new airworthiness directive

(AD) applicable to Sikorsky Model S–76A helicopters. The AD would require inspecting at specified intervals until installing a soft-start assembly retrofit kit on the air conditioning system to prevent a continuous flow of current through the soft-start resistor. This proposal is prompted by a report of overheating of the soft-start assembly. The actions specified by the proposed AD are intended to prevent overheating of the air conditioning soft-start assembly, damage in the lower tailcone, an electrical fire, and subsequent loss of control of the helicopter.

DATES: Comments must be received on or before May 22, 2000.

ADDRESSES: Submit comments in triplicate to the Federal Aviation Administration (FAA), Office of the Regional Counsel, Southwest Region, Attention: Rules Docket No. 99–SW–37–AD, 2601 Meacham Blvd., Room 663, Fort Worth, Texas 76137. Comments may be inspected at this location between 9:00 am and 3:00 pm, Monday through Friday, except Federal holidays.

The service information referenced in the proposed rule may be obtained from Sikorsky Aircraft Corporation, Attn: Manager, Commercial Tech Support, 6900 Main Street, P.O. Box 9729, Stratford, Connecticut 06615–9129, phone (203) 386–7860, fax (203) 386–4703. This information may be examined at the FAA, Office of the Regional Counsel, Southwest Region, 2601 Meacham Blvd., Room 663, Fort Worth, Texas.

FOR FURTHER INFORMATION CONTACT: Terry Fahr, Boston Aircraft Certification Office, 12 New England Executive Park, Burlington, MA 01803, telephone (781) 238–7155, fax (781) 238–7199.

SUPPLEMENTARY INFORMATION:

Comments Invited

Interested persons are invited to participate in the making of the proposed rule by submitting such written data, views, or arguments as they may desire. Communications should identify the Rules Docket number and be submitted in triplicate to the address specified above. All communications received on or before the closing date for comments, specified above, will be considered before taking action on the proposed rule. The proposals contained in this notice may be changed in light of the comments received.

Comments are specifically invited on the overall regulatory, economic, environmental, and energy aspects of the proposed rule. All comments submitted will be available, both before and after the closing date for comments, in the Rules Docket for examination by interested persons. A report summarizing each FAA-public contact concerned with the substance of this proposal will be filed in the Rules Docket.

Commenters wishing the FAA to acknowledge receipt of their comments submitted in response to this notice must submit a self-addressed, stamped postcard on which the following statement is made: ''Comments to Docket No. 99–SW–37–AD.'' The postcard will be date stamped and returned to the commenter.

Availability of NPRMs

Any person may obtain a copy of this NPRM by submitting a request to the FAA, Office of the Regional Counsel, Southwest Region, Attention: Rules Docket No. 99–SW–37–AD, 2601 Meacham Blvd., Room 663, Fort Worth, Texas 76137.

Discussion

This document proposes adopting a new AD applicable to Sikorsky Model S–76A helicopters. The AD would require inspecting the soft-start assembly at intervals not to exceed 25 hours time-in-service until installing a soft-start assembly retrofit kit on the Aero Aire Air Conditioning System, part number (P/N) S–76A–1–2, in 120 calendar days to prevent a continuous flow of current through the soft-start resistor. This proposal is prompted by a report of overheating of the air conditioning soft-start assembly. This condition, if not corrected, could cause serious secondary damage in the lower tailcone, an electrical fire, and subsequent loss of control of the helicopter.

The FAA has reviewed Sikorsky Alert Service Bulletin 76–21–4A, dated February 24, 1998 (ASB). The ASB refers operators to procedures in Aero Aire Corp. Service Bulletins 970001, Revision A, dated September 18, 1997, for inspecting the soft-start assembly, and 970002, dated December 18, 1997, for installing a soft-start assembly retrofit kit, P/N 76SB001, on the Aero Aire Air Conditioning System, P/N S–76A–1–2, on Sikorsky Model S–76A helicopters. The ASB states the procedures are necessary to prevent overheating of the air conditioning soft-start assembly that could cause serious secondary damage in the lower tailcone.

Since an unsafe condition has been identified that is likely to exist or develop on other Sikorsky Model S–76A helicopters of the same type designs, the proposed AD would require inspecting the soft start assembly at intervals not to exceed 25 hours time-in-service until installing a soft-start control assembly retrofit kit on the Aero Aire Air Conditioning System, P/N A–76A–1–2, within 120 calendar days. The actions would be required to be accomplished in accordance with the Aero Aire service bulletins described previously.

The FAA estimates that 9 helicopters of U.S. registry would be affected by this proposed AD, that it would take approximately 3 work hours per helicopter to accomplish the proposed actions, and that the average labor rate is $60 per work hour. Aero Aire Service Bulletin No. 97002 states that the retrofit kit will be provided at no charge. Based on these figures, the total cost impact of the proposed AD on U.S. operators is estimated to be $1620.

The regulations proposed herein would not have substantial direct effects on the States, on the relationship between the national government and the States, or on the distribution of power and responsibilities among the various levels of government. Therefore, it is determined that this proposal would not have federalism implications under Executive Order 13132.

For the reasons discussed above, I certify that this proposed regulation (1) is not a ''significant regulatory action'' under Executive Order 12866; (2) is not a ''significant rule'' under the DOT Regulatory Policies and Procedures (44 FR 11034, February 26, 1979); and (3) if promulgated, will not have a significant economic impact, positive or negative, on a substantial number of small entities under the criteria of the Regulatory Flexibility Act. A copy of the draft regulatory evaluation prepared for this action is contained in the Rules Docket. A copy of it may be obtained by contacting the Rules Docket at the location provided under the caption **ADDRESSES**.

List of Subjects in 14 CFR Part 39

Air transportation, Aircraft, Aviation safety, Safety.

The Proposed Amendment

Accordingly, pursuant to the authority delegated to me by the Administrator, the Federal Aviation Administration proposes to amend part 39 of the Federal Aviation Regulations (14 CFR part 39) as follows:

PART 39—AIRWORTHINESS DIRECTIVES

1. The authority citation for part 39 continues to read as follows:

Authority: 49 U.S.C. 106(g), 40113, 44701.

§ 39.13 [Amended]

2. Section 39.13 is amended by adding a new airworthiness directive to read as follows:

Sikorsky Aircraft Corporation:
Docket No. 99–SW–37–AD.

Applicability: Model S–76A helicopters with Aero Aire Air Conditioning System, part number (P/N) S–76A–1–2, modified in accordance with Supplemental Type Certificate SH4680SW, certificated in any category.

Note 1: This AD applies to each helicopter identified in the preceding applicability provision, regardless of whether it has been otherwise modified, altered, or repaired in the area subject to the requirements of this AD. For helicopters that have been modified, altered, or repaired so that the performance of the requirements of this AD is affected, the owner/operator must request approval for an alternative method of compliance in accordance with paragraph (c) of this AD. The request should include an assessment of the effect of the modification, alteration, or repair on the unsafe condition addressed by this AD; and, if the unsafe condition has not been eliminated, the request should include specific proposed actions to address it.

Compliance: Required as indicated, unless accomplished previously.

To prevent overheating of the air conditioning soft-start control assembly, damage in the lower tailcone, a fire, and subsequent loss of control of the helicopter, accomplish the following:

(a) Within 25 hours time-in-service (TIS) and thereafter at intervals not to exceed 25 hours TIS, inspect the soft-start control assembly in accordance with the Accomplishment Instruction, Section III, of Aero Aire Corporation Service Bulletin No. 970001, Revision A, dated September 18, 1997, except neither contact nor return of the soft-start controller unit is required.

(b) Within 120 calendar days, install a soft start assembly retrofit kit (kit), P/N 76SB001, in accordance with the Accomplishment Instructions, Section III, of Aero Aire Corporation Service Bulletin 970002, dated December 18, 1997. Installing the kit is terminating action for the requirements of this AD.

(c) An alternative method of compliance or adjustment of the compliance time that provides an acceptable level of safety may be used if approved by the Manager, Boston Aircraft Certification Office, FAA. Operators shall submit their requests through an FAA Principal Maintenance Inspector, who may concur or comment and then send it to the Manager, Boston Aircraft Certification Office.

Note 2: Information concerning the existence of approved alternative methods of compliance with this AD, if any, may be obtained from the Boston Aircraft Certification Office.

(d) Special flight permits may be issued in accordance with sections 21.197 and 21.199 of the Federal Aviation Regulations (14 CFR 21.197 and 21.199) to operate the helicopter to a location where the requirements of this AD can be accomplished.

Issued in Fort Worth, Texas, on March 15, 2000.

Eric Bries,

Acting Manager, Rotorcraft Directorate, Aircraft Certification Service.

[FR Doc. 00–7112 Filed 3–21–00; 8:45 am]

BILLING CODE 4910–13–U

DEPARTMENT OF TRANSPORTATION

Federal Aviation Administration

14 CFR Part 71

[Airspace Docket No. 00–AWP–1]

Proposed Modification of Class E Airspace; Willits, CA

AGENCY: Federal Aviation Administration (FAA), DOT.

ACTION: Notice of proposed rulemaking.

SUMMARY: This action proposes to modify the Class E airspace area at Willits, CA. A revision of Global Positioning System (GPS) Standard Instrument Approach Procedure (SIAP) to Runway (RWY) 16 and RWY 34 at Ells Field-Willits Municipal Airport has made this proposal necessary. Additionally controlled airspace extending upward from 700 feet or more above the surface of the earth is needed to contain aircraft executing the GPS RWY 16 and RWY 34 SIAP to Ells Field-Willits Municipal Airport. The intended effect of this proposal is to provide adequate controlled airspace for Instrument Flight Rules (IFR) operations at Ells Field-Willits Municipal Airport, Willits, CA.

DATES: Comments must be received on or before April 17, 2000.

ADDRESSES: Send comments on the proposal in triplicate to: Federal Aviation Administration, Attn: Manager, Airspace Branch, AWP–520, Docket No. 00–AWP–1, Air Traffic Division, 15000 Aviation Boulevard, Lawndale, California 90261.

The official docket may be examined in the Office of Regional Counsel, Western-Pacific Region, Federal Aviation Administration, Room 6007, 15000 Aviation Boulevard, Lawndale, California 90261.

An informal docket may also be examined during normal business hours at the Office of the Manager, Airspace Branch, Air Traffic Division at the above address.

FOR FURTHER INFORMATION CONTACT: Larry Tonish, Air Traffic Airspace Specialist, Airspace Branch, AWP–520, Air Traffic Division, Western-Pacific Region, Federal Aviation Administration, 15000 Aviation Boulevard, Lawndale, California 90261, telephone (310) 725–6539.

SUPPLEMENTARY INFORMATION:

Comments Invited

Interested parties are invited to participate in this proposed rulemaking by submitting such written data, views, or arguments as they may desire. Comments that provide the factual basis supporting the views and suggestions presented are particularly helpful in developing reasoned regulatory decisions on the proposal. Comments are specifically invited on the overall regulatory, aeronautical, economic, environmental, and energy-related aspects of the proposal. Communications should identify the airspace docket number and be submitted in triplicate to the address listed below. Commenters wishing the FAA to acknowledge receipt of their comments on this action must submit with the comments a self-addressed, stamped postcard on which the following statement is made: ''Comments to Airspace Docket No. 00–AWP–1.'' The postcard will be date/time stamped and returned to the commenter. All communications received on or before the specified closing date for comments will be considered before taking action on the proposed rule. The proposal contained in this action may be changed in light of comments received. All comments submitted will be available for examination in the Airspace Branch, Air Traffic Division, 15000 Aviation Boulevard, Lawndale, California 90261, both before and after the closing date for comments. A report summarizing each substantive public contact with FAA personnel concerned with this rulemaking will be filed in the docket.

Availability of NPRM

Any person may obtain a copy of this Notice of Proposed Rulemaking (NPRM) by submitting a request to the Federal Aviation Administration, Airspace Branch, 15000 Aviation Boulevard, Lawndale, California 90261. Communications must identify the docket number of this NPRM. Persons interested in being placed on a mailing list for future NPRM's should also request a copy of Advisory Circular No. 11–2A, which describes the application procedures.

The Proposal

The FAA is considering an amendment to 14 CFR part 71 by modifying the Class E airspace area at Willits, CA. A revisions to the GPS RWY 16 and RWY 34 SIAP at Ells Field-Willits Municipal Airport has made this

proposal necessary. Additional controlled airspace extending upward from 700 feet above the surface is needed to contain aircraft executing these GPS approach procedures at Ells Field-Willits Municipal Airport. The intended effect of this proposal is to provide adequate controlled airspace for aircraft executing the GPS RWY 16 and RWY 34 SIAP at Ells Field-Willits Municipal Airport, Willits, CA. Class E airspace designations are published in paragraph 6005 of FAA Order 7400.9G dated September 1, 1999, and effective September 16, 1999, which is incorporated by reference in 14 CFR 71.1 The Class E airspace designation listed in this document would be published subsequently in this Order.

The FAA has determined that this proposed regulation only involves an established body of technical regulations for which frequent and routine amendments are necessary to keep them operationally current. Therefore, this proposed regulation—(1) Is not a ''significant regulatory action'' under Executive Order 12866; (2) is not a ''significant rule'' under DOT Regulatory Policies and Procedures (44 FR 11035; February 26, 1979); and (3) does not warrant preparation of a Regulatory Evaluation as the anticipated impact is so minimal. Since this is a routine matter that will only affect air traffic procedures and air navigation, it is certified that this proposed rule would not have a significant economic impact on a substantial number of small entities under the criteria of the Regulatory Flexibility Act.

List of Subjects in 14 CFR Part 71

Airspace, Incorporation by reference, Navigation (air).

The Proposed Amendment

In consideration of the foregoing, the Federal Aviation Administration proposes to amend 14 CFR part 71 as follows:

PART 71—DESIGNATION OF CLASS A, CLASS B, CLASS C, CLASS D, AND CLASS E AIRSPACE AREAS; AIRWAYS; ROUTES; AND REPORTING POINTS

1. The authority citation for 14 CFR part 71 continues to read as follows:

Authority: 49 U.S.C. 106(g), 40103, 40113, 40120; E.O. 10854, 24 FR 9565, 3 CFR, 1959–1963 Comp., p. 389.

§ 71.1 [Amended]

2. The incorporation by reference in 14 CFR 71.1 of the Federal Aviation Administration Order 7400.9G, Airspace Designations and Reporting Points, dated September 1, 1999, and effective September 16, 1999, is amended as follows:

Paragraph 6005 Class E airspace areas extending upward from 700 feet or more above the surface of the earth.

* * * * *

AWP CA E5 Willits, CA [Revised]

Ells Field-Willits Municipal Airport, CA
(Lat. 39°27′03″N, long. 123°22′12″W)

That airspace extending upward from 700 feet above the surface within a 6.3-mile radius of the Ells Field-Willits Municipal Airport and that airspace bounded by a line beginning at lat. 39°28′00″N, long. 123°30′15″W; to lat. 39°48′30″N, long 123°42′00″W; to lat. 39°53′30″W, long. 123°28′30″W; to lat. 39°25′53″N, long. 123°14′13″W, thence clockwise along the 6.3-mile radius of the Ells Field-Willits Municipal Airport, to the point of beginning.

* * * * *

Issued in Los Angeles, California, on February 15, 200.

Dawna J. Vicars,

Assistant Manager, Air Traffic Division, Western-Pacific Region.

[FR Doc. 00–7000 Filed 3–21–00; 8:45 am]

BILLING CODE 4910–13–M

DEPARTMENT OF TRANSPORTATION

Coast Guard

33 CFR Part 165

[CGD01–99–198]

RIN 2115–AA97

Safety Zone: Parade of Tall Ships Newport 2000, Newport, RI

AGENCY: Coast Guard, DOT.

ACTION: Notice of proposed rulemaking.

SUMMARY: The Coast Guard proposes to establish a temporary moving safety zone around vessels participating in the Newport, RI, parade of Tall Ships on July 2, 2000. The proposed moving safety zone will extend two hundred (200) yards ahead of the lead vessel to two hundred (200) yards astern of the last vessel in the parade, and two hundred (200) yards abeam of each parading vessel along the designated parade route. The safety zone is needed to protect each of the Tall Ships, which will have limited maneuverability, from damage as well as protect passing and spectator vessels. Entry into this zone will be prohibited unless authorized by the Captain of the Port, Providence, Rhode Island.

DATES: Comments and related material must reach the Coast Guard on or before May 8, 2000.

ADDRESSES: You may mail comments and related material to Marine Safety Office Providence, 20 Risho Avenue, East Providence, Rhode Island 02914. The Prevention Department maintains the public docket for this rulemaking. Comments and material received from the public, as well as documents indicated in this preamble as being available in the docket, will become part of this docket and will be available for inspection or copying at Marine Safety Office Providence between 8 am and 3 pm, Monday through Friday, except Federal holidays.

FOR FURTHER INFORMATION CONTACT: CWO John W. Winter at Marine Safety Office Providence, (401) 435–2335.

SUPPLEMENTARY INFORMATION:

Request for Comments

We encourage you to participate in this rulemaking by submitting comments and related material. If you do so, please include your name and address, identify the docket number for this rulemaking (CGD01 99–198), indicate the specific section of this document to which each comment applies, and give the reason for each comment. Please submit all comments and related material in an unbound format, no larger than 8½ by 11 inches, suitable for copying. If you would like to know they reached us, please enclose a stamped, self-addressed postcard or envelope. We will consider all comments and material received during the comment period. We may change this proposed rule in view of them.

Public Meeting

We do not now plan to hold a public meeting. However, you may submit a request for a meeting by writing to Marine Safety Office Providence at the address under **ADDRESSES** explaining why one would be beneficial. If we determine that one would aid this rulemaking, we will hold one at a time and place announced by a later notice in the **Federal Register**.

Background and Purpose

There will be numerous Tall Ships and other smaller sailing vessels participating in a parade of sail on Sunday, July 2, 2000, for the Tall Ships Newport 2000 celebration. The entire parade event is scheduled to last approximately six hours, beginning at 10 a.m. and ending at 4 p.m. The parading vessels will transit outbound from Newport Harbor, then north through the East Passage, Narragansett Bay, underneath the Newport Bridge, westward around Gould Island, and then southbound out to sea.

Discussion of Proposed Rule

The Coast Guard proposes this rule to protect spectator craft, mariners and the Tall Ships themselves from possible collision while the Tall Ships are making way under sail and have limited mobility in the channel during the parade. The entire parade event is scheduled to last approximately six hours, beginning at 10 am and ending at 4 pm. The parading vessels will transit outbound from Newport Harbor, then north through the East Passage, Narragansett Bay, underneath the Newport Bridge, westward around Gould Island, and then southbound out to sea. The parade of sail route extends through the East Passage of Narragansett Bay and passes through the following points: (see NOAA Charts(s) #13218, 13221, 13223).

Latitude	Longitude
41.30′18″ N	71.20′58″ W
41.31′43″ N	71.20′00″ W
41.33′29″ N	71.19′14″ W
41.33′29″ N	71.20′55″ W
41.32′19″ N	71.21′12″ W
41.28′45″ N	71.20′45″ W
41.27′44″ N	71.22′24″ W

We feel this proposed rule would give the Coast Guard the authority to ensure the safety of all vessels participating in the parade event as well as spectator craft enjoying the event.

Regulatory Evaluation

This proposed rule is not a ''significant regulatory action'' under section 3(f) of Executive Order 12866 and does not require an assessment of potential costs and benefits under section 6(a)(3) of that Order. The Office of Management and Budget has not reviewed it under that Order. It is not significant under the regulatory policies and procedures of the Department of Transportation (DOT) (44 FR 11040, February 26, 1979).

We expect the economic impact of this proposed rule to be so minimal that a full Regulatory Evaluation under paragraph 10e of the regulatory policies and procedures of DOT is unnecessary.

This safety zone involves only the southeast portion of Narragansett Bay and would shut down the East passage to commercial and recreation traffic during the event. The effect of this regulation will not be significant because this rule would be in effect for only approximately 6 hours, recreational vessel traffic could pass safely around the safety zone through the West passage, and maritime advisories will be made well in advance allowing large commercial traffic to schedule around the event.

Small Entities

Under the Regulatory Flexibility Act (5 U.S.C. 601–612), we considered whether this proposed rule would have a significant economic impact on a substantial number of small entities. The term ''small entities'' comprises small businesses, not-for-profit organizations that are independently owned and operated and are not dominant in their fields, and governmental jurisdictions with populations of less than 50,000.

The Coast Guard certifies under 5 U.S.C. 605(b) that this proposed rule would not have a significant economic impact on a substantial number of small entities.

This proposed rule would affect the following entities, some of which might be small entities: the owners or operators of vessels intending to transit or anchor in a small portion of Narragansett Bay for approximately six hours between the hours of 10 am and 4 pm on July 2, 2000.

This safety zone would not have a significant economic impact on a substantial number of small entities for the following reasons. This rule would be in effect for only approximately 6 hours. Recreational vessel traffic could pass safely around the safety zone through the West passage. Before the effective period, we would issue maritime advisories widely available to users of the bay, and this will allow large commercial traffic ample time to schedule around the event.

If you think that your business, organization, or governmental jurisdiction qualifies as a small entity and that this rule would have a significant economic impact on it, please submit a comment (see **ADDRESSES**) explaining why you think it qualifies and how and to what degree this rule would economically affect it.

Assistance for Small Entities

Under section 213(a) of the Small Business Regulatory Enforcement Fairness Act of 1996 (Pub. L. 104–121), we want to assist small entities in understanding this proposed rule so that they can better evaluate its effects on them and participate in the rulemaking. If the rule would affect your small business, organization, or governmental jurisdiction and you have questions concerning its provisions or options for compliance, please contact CWO John W. Winter, telephone (401) 435–2335.

Collection of Information

This proposed rule would call for no new collection of information under the Paperwork Reduction Act of 1995 (44 U.S.C. 3501–3520).

Federalism

We have analyzed this proposed rule under E.O. 13132 and have determined that this rule does not have implications for federalism under that Order.

Unfunded Mandates Reform Act

The Unfunded Mandates Reform Act of 1995 (2 U.S.C. 1531–1538) governs the issuance of Federal regulations that require unfunded mandates. An unfunded mandate is a regulation that requires a State, local, or tribal government or the private sector to incur direct costs without the Federal Government's having first provided the funds to pay those costs. This proposed rule would not impose an unfunded mandate.

Taking of Private Property

This proposed rule would not effect a taking of private property or otherwise have taking implications under E.O. 12630, Governmental Actions and Interference with Constitutionally Protected Property Rights.

Civil Justice Reform

This proposed rule meets applicable standards in sections 3(a) and 3(b)(2) of E.O. 12988, Civil Justice Reform, to minimize litigation, eliminate ambiguity, and reduce burden.

Protection of Children

We have analyzed this proposed rule under E.O. 13045, Protection of Children from Environmental Health Risks and Safety Risks. This rule is not an economically significant rule and does not concern an environmental risk to health or risk to safety that may disproportionately affect children.

Environment

The Coast Guard has considered the environmental impact of implementing this proposed rule and concluded that, under figure 2–1, paragraph 34(g), of Commandant Instruction M16475.lC, this proposed rule is categorically excluded from further environmental documentation. A ''Categorical Exclusion Determination'' is available in the docket where indicated under **ADDRESSES.**

List of Subjects in 33 CFR Part 165

Harbors, Marine safety, Navigation (water), Reports and recordkeeping requirements, Security measures, and Waterways.

For the reasons discussed in the preamble, the Coast Guard proposes to amend 33 CFR part 165 as follows:

PART 165—REGULATED NAVIGATION AREAS AND LIMITED ACCESS AREAS

1. The authority citation for part 165 continues to read as follows:

Authority: 33 U.S.C. 1231; 50 U.S.C. 191; 33 CFR 1.05(g), 6.04–1, 6.04–6 and 160.5; 49 CFR 1.46.

2. Add temporary § 165.T01–198 to read as follows:

§ 165.T01–198 Safety Zone: Parade of Tall Ships Newport 2000, Rhode Island, Lower Narragansett Bay, East Passage.

(a) *Location.* A moving safety zone 200 yards ahead of the lead vessel in the parade, 200 yards astern of the last vessel in the parade, and 200 yards abeam of each vessel participating in the Tall Ships Newport 2000 parade of sail. The parade of sail route extends through the East Passage of Narragansett Bay and passes through the following points: (see NOAA Charts(s) #13218, 13221, 13223)

Latitude	Longitude
41.30′18″ N	71.20′58″ W
41.31′43″ N	71.20′00″ W
41.33′29″ N	71.19′14″ W
41.33′29″ N	71.20′55″ W
41.32′19″ N	71.21′12″ W
41.28′45″ N	71.20′45″ W
41.27′44″ N	71.22′24″ W

(b) *Effective period.* Paragraph (a) of this section is effective between 10 a.m. and 4 p.m. on Sunday, July 2, 2000. Departure time is dependent on the tide, weather and granting of authority for departure by the Captain of the Port, Providence.

(c) *Regulations.* (1) The general regulations governing safety zones contained in 33 CFR 165.23 apply.

(2) All persons and vessels shall comply with the instructions of the Coast Guard Captain of the Port or the designated on-scene-patrol personnel. These personnel comprise commissioned, warrant, and petty officers of the Coast Guard. Upon being hailed by siren, radio, flashing light, or other means, the operator of the vessel shall process as directed.

Dated: March 6, 2000.

Peter A. Popko,

Captain, U.S. Coast Guard, Captain of the Port, Marine Safety Office Providence.

[FR Doc. 00–7104 Filed 3–21–00; 8:45 am]

BILLING CODE 4910–15–U

DEPARTMENT OF TRANSPORTATION

Coast Guard

33 CFR Part 165

[CGD01–99–197]

RIN 2115–AA97

Safety Zone: Fireworks Display, Naval Station Newport, Newport, RI

AGENCY: Coast Guard, DOT.

ACTION: Notice of proposed rulemaking.

SUMMARY: The Coast Guard proposes to establish a safety zone within a five hundred (500) yard radius of the fireworks launching site at Naval Station Newport, Newport, RI on June 30, 2000. The safety zone is needed to safeguard the public from possible hazards associated with a fireworks display. Entry into this zone will be prohibited unless authorized by the Captain of the Port, Providence, Rhode Island.

DATES: Comments and related material must reach the Coast Guard on or before May 8, 2000.

ADDRESSES: You may mail comments and related material to Marine Safety Office Providence, 20 Risho Avenue, East Providence, Rhode Island 02914. The Prevention Department maintains the public docket for this rulemaking. Comments and material received from the public, as well as documents indicated in this preamble as being available in the docket, will become part of this docket and will be available for inspection or copying at Marine Safety Office Providence between 8 am and 3 pm, Monday through Friday, except Federal holidays.

FOR FURTHER INFORMATION CONTACT: CWO John W. Winter at Marine Safety Office Providence, (401) 435–2335.

SUPPLEMENTARY INFORMATION:

Request for Comments

We encourage you to participate in this rulemaking by submitting comments and related material. If you do so, please include your name and address, identify the docket number for this rulemaking (CGD01 99–197), indicate the specific section of this document to which each comment applies, and give the reason for each comment. Please submit all comments and related material in an unbound format, no larger than 8½ by 11 inches, suitable for copying. If you would like to know they reached us, please enclose a stamped, self-addressed postcard or envelope. The comment period for this proposed rule is 45 days. This time period is adequate to allow input because the event is highly publicized, and the shortened comment period will allow the full 30 day publication requirement prior to the final rule becoming effective. We will consider all comments and material received during the comment period. We may change this proposed rule in view of them.

Public Meeting

We do not now plan to hold a public meeting. However, you may submit a request for a meeting by writing to Marine Safety Office Providence at the address under **ADDRESSES** explaining why one would be beneficial. If we determine that one would aid this rulemaking, we will hold one at a time and place announced by a later notice in the **Federal Register**.

Background and Purpose

The safety zone is needed to protect the public from debris and other hazards associated with fireworks display at Naval station Newport, starting at 8 p.m. on June 30. The event will last approximately 3 hours.

Discussion of Proposed Rule

The Coast Guard proposes this rule to protect mariners and spectator crafts from falling debris and possible fire hazards related to fireworks displays. The event is scheduled to start at 8 p.m. and last approximately 3 hours. This proposed rule would give the Coast Guard the authority to ensure the safety of all spectator vessels enjoying the event.

Regulatory Evaluation

This proposed rule is not a ''significant regulatory action'' under section 3(f) of Executive Order 12866 and does not require an assessment of potential costs and benefits under section 6(a)(3) of that Order. The Office of Management and Budget has not reviewed it under that Order. It is not significant under the regulatory policies and procedures of the Department of Transportation (DOT) (44 FR 11040, February 26, l979).

We expect the economic impact of this proposed rule to be so minimal that a full Regulatory Evaluation under paragraph 10e of the regulatory policies and procedures of DOT is unnecessary.

This safety zone involves a very small area of Narragansett Bay. The effect of this regulation will not be significant due to the lateness of the hour; all vessel traffic may safely transit around this safety zone; and the extensive maritime advisories that will be made.

Small Entities

Under the Regulatory Flexibility Act (5 U.S.C. 601–612), we considered whether this proposed rule would have a significant economic impact on a substantial number of small entities. The term ''small entities'' comprises small businesses, not-for-profit organizations that are independently owned and operated and are not dominant in their fields, and governmental jurisdictions with populations of less than 50,000.

The Coast Guard certifies under 5 U.S.C. 605(b) that this proposed rule would not have a significant economic impact on a substantial number of small entities.

This proposed rule would affect the following entities, some of which might be small entities: the owners or operators of vessels intending to transit or anchor in a portion of Narragansett Bay from 8 p.m. to 11 p.m. on June 30, 2000.

This safety zone would not have a significant economic impact on a substantial number of small entities for the following reasons. This rule would be in effect for only three hours and vessel traffic could pass safely around the safety zone. Before the effective period, we would issue maritime advisories widely available to users of Narragansett Bay.

If you think that your business, organization, or governmental jurisdiction qualifies as a small entity and that this rule would have a significant economic impact on it, please submit a comment (see **ADDRESSES**) explaining why you think it qualifies and how and to what degree this rule would economically affect it.

Assistance for Small Entities

Under section 213(a) of the Small Business Regulatory Enforcement Fairness Act of 1996 (Pub. L. 104–121), we want to assist small entities in understanding this proposed rule so that they can better evaluate its effects on them and participate in the rulemaking. If the rule would affect your small business, organization, or governmental jurisdiction and you have questions concerning its provisions or options for compliance, please contact CWO John W. Winter, telephone (401)435–2335.

Collection of Information

This proposed rule would call for no new collection of information under the Paperwork Reduction Act of 1995 (44 U.S.C. 3501–3520).

Federalism

We have analyzed this proposed rule under E.O. 13132 and have determined that this rule does not have implications for federalism under that Order.

Unfunded Mandates Reform Act

The Unfunded Mandates Reform Act of 1995 (2 U.S.C. 1531–1538) governs the issuance of Federal regulations that require unfunded mandates. An unfunded mandate is a regulation that requires a State, local, or tribal government or the private sector to incur direct costs without the Federal Government's having first provided the funds to pay those costs. This proposed rule would not impose an unfunded mandate.

Taking of Private Property

This proposed rule would not effect a taking of private property or otherwise have taking implications under E.O. 12630, Governmental Actions and Interference with Constitutionally Protected Property Rights.

Civil Justice Reform

This proposed rule meets applicable standards in sections 3(a) and 3(b)(2) of E.O. 12988, Civil Justice Reform, to minimize litigation, eliminate ambiguity, and reduce burden.

Protection of Children

We have analyzed this proposed rule under E.O. 13045, Protection of Children from Environmental Health Risks and Safety Risks. This rule is not an economically significant rule and does not concern an environmental risk to health or risk to safety that may disproportionately affect children.

Environment

The Coast Guard has considered the environmental impact of implementing this proposed rule and concluded that, under figure 2–1, paragraph 34(g), of Commandant Instruction M16475.lC, this proposed rule is categorically excluded from further environmental documentation. A ''Categorical Exclusion Determination'' is available in the docket where indicated under **ADDRESSES**.

List of Subjects in 33 CFR Part 165

Harbors, Marine safety, Navigation (water), Reports and recordkeeping requirements, Security measures, and Waterways.

For the reasons discussed in the preamble, the Coast Guard proposes to amend 33 CFR part 165 as follows:

PART 165—REGULATED NAVIGATION AREAS AND LIMITED ACCESS AREAS

1. The authority citation for part 165 continues to read as follows:

Authority: 33 U.S.C. 1231; 50 U.S.C. 191; 33 CFR 1.05(g), 6.04–1, 6.04–6 and 160.5; 49 CFR 1.46.

2. Add temporary § 165.T01–197 to read as follows:

§ 165.T01–197 Safety Zone: Fireworks Display, Naval Station Newport, Newport, Rhode Island.

(a) *Location.* All waters within a five hundred (500) yard radius of the fireworks launching platform located approximately 300 yards off shore from Coasters Island, Naval Station Newport, Newport, Rhode Island.

(b) *Effective Period.* This section is effective from 8 p.m. until 11 p.m. on June 30, 2000, unless extended or terminated sooner by the Captain of the Port Providence.

(c) *Regulations.* (1) The general regulations governing safety zones contained in 33 CFR 165.23 apply.

(2) All persons and vessels shall comply with the instructions of the Coast Guard Captain of the Port or the designated on-scene patrol personnel. These personnel comprise commissioned, warrant, and petty officers of the Coast Guard. Upon being hailed by a U.S. Coast Guard vessel by siren, radio, flashing light, or other means, the operator of a vessel shall proceed as directed.

Dated: March 6, 2000.

Peter A. Popko,

Captain, U.S. Coast Guard, Captain of the Port, Marine Safety Office Providence.

[FR Doc. 00–7060 Filed 3–22–00; 8:45 am]

BILLING CODE 4910–15–U

ENVIRONMENTAL PROTECTION AGENCY

40 CFR Part 52

[CA 224–0213b; FRL–6549–8]

Approval and Promulgation of Implementation Plans; California State Implementation Plan Revision, Monterey Bay Unified Air Pollution Control District, San Joaquin Unified Air Pollution Control District, Santa Barbara County Air Pollution Control District, South Coast Air Quality Air Management District

AGENCY: Environmental Protection Agency (EPA).

ACTION: Proposed rule.

SUMMARY: EPA proposes to approve revisions to the California State Implementation Plan (SIP) which concern the control of volatile organic compound (VOC) emissions from wood product and wood panelling coating operations.

The intended effect of this action is to regulate emissions of VOCs according to the requirements of the Clean Air Act, as amended in 1990 (CAA or the Act). In the Final Rules Section of this **Federal Register**, the EPA is approving the state's SIP submittal as a direct final rule without prior proposal because the Agency views this as a noncontroversial revision and anticipates no adverse comments. A detailed rationale for this approval is set forth in the direct final rule. If no adverse comments are received, no further activity is contemplated. If EPA receives adverse comments, the direct final rule will be withdrawn and all public comments received will be addressed in a subsequent final rule based on this proposed rule. The EPA will not institute a second comment period. Any parties interested in commenting should do so at this time.

DATES: Written comments must be received by April 21, 2000.

ADDRESSES: Comments should be addressed to: Andrew Steckel, Rulemaking Office (AIR–4), Air Division, U.S. Environmental Protection Agency, Region IX, 75 Hawthorne Street, San Francisco, CA 94105–3901.

Copies of the rule revisions and EPA's evaluation report of each rule are available for public inspection at EPA's Region 9 office during normal business hours. Copies of the submitted rule revisions are also available for inspection at the following locations:

California Air Resources Board, Stationary Source Divison, Rule Evaluation Section, 2020 ''L'' Street, Sacramento, CA 95812;

Monterey Bay Unified Air Pollution Control District, 24580 Silver Cloud Court, Monterey, CA 93940;

San Joaquin Unified Air Pollution Control District, 1999 Tuolumne Street, Suite 200, Fresno, CA 93721;

Santa Barbara County Air Pollution Control District 26 Castilian Drive, Suite B–23, Goleta, CA 93117; and,

South Coast Air Quality Management District, 218 East Copley Drive, Diamond Bar, CA 91765.

FOR FURTHER INFORMATION CONTACT: Jerald S. Wamsley, Rulemaking Office, (AIR–4), Air Division, U.S. Environmental Protection Agency, Region 9, 75 Hawthorne Street, San Francisco, CA 94105–3901, Telephone: (415) 744–1226.

SUPPLEMENTARY INFORMATION: This document concerns the following local district rules: Monterey Bay Unified Air Pollution Control District (MBUAPCD) Rule 429—Applications of Nonarchitectural Coatings; San Joaquin Valley Unified Air Pollution Control District (SJVUAPCD) Rule 4606—Wood Products Coating Operations; Santa Barbara County Air Pollution Control District (SBCAPCD) Rule 351—Surface Coating of Wood Products; South Coast Air Quality Management District (SCAQMD) Rule 1104—Wood Flat Stock Coating Operations. These rules were submitted by the California Air Resources Board (CARB) to EPA on these respective dates: March 23, 1988; February 16, 1999; May 13, 1999; and, October 29, 1999.

For further information, please see the information provided in the direct final action that is located in the rules section of this **Federal Register**.

Dated: February 15, 2000.

Laura Yoshii,

Acting Regional Administrator, Region IX.

[FR Doc. 00–6973 Filed 3–21–00; 8:45 am]

BILLING CODE 6560–50–P

ENVIRONMENTAL PROTECTION AGENCY

40 CFR Part 52

[OR73–7288–b; FRL–6544–5]

Approval and Promulgation of State Implementation Plans: Oregon

AGENCY: Environmental Protection Agency (EPA).

ACTION: Proposed rule.

SUMMARY: The Environmental Protection Agency (EPA) approves various revisions to Oregon's State Implementation Plan (SIP). This revision to the SIP was submitted to EPA, dated October 8, 1998.

The revised regulations include Transportation Conformity (OAR 340–020–710 through 340–020–1080) and General Conformity OAR–020–1500 through 340–020–1590). In the Final Rules section of this **Federal Register**, the EPA is approving the State's SIP submittal as a direct final rule without prior proposal because the Agency views this as a noncontroversial submittal amendment and anticipates no adverse comments. A detailed rationale for the approval is set forth in the direct final rule. If no adverse comments are received in response to this action, no further activity is contemplated. If the EPA receives adverse comments, the direct final rule will be withdrawn and all public comments received will be addressed in a subsequent final rule based on this proposed rule. The EPA will not institute a second comment period. Any parties interested in commenting on this action should do so at this time.

DATES: Written comments must be received in writing by April 21, 2000.

ADDRESSES: Written comments should be addressed to Christine Lemme (OAQ–107), Office of Air Quality, at the EPA Regional Office listed below. Copies of the state submittal are available at the following addresses for inspection during normal business hours. The interested persons wanting to examine these documents should make an appointment with the appropriate office at least 24 hours before the visiting day. Environmental Protection Agency, Region 10, Office of Air Quality, 1200 6th Avenue, Seattle, WA 98101 and the Oregon Department of Environmental Quality, 811 SW Sixth Avenue, Portland, Oregon 97204–1390.

FOR FURTHER INFORMATION CONTACT: Wayne Elson, Office of Air Quality, (OAQ–107), EPA, 1200 6th Avenue, Seattle, WA 98101, (206) 553–1463.

SUPPLEMENTARY INFORMATION: For additional information, see the Direct Final rule which is located in the Rules section of this **Federal Register**.

Dated: February 22, 2000.

Chuck Findley,

Acting Regional Administrator, Region 10.

[FR Doc. 00–6970 Filed 3–21–00; 8:45 am]

BILLING CODE 6560–50–P

ENVIRONMENTAL PROTECTION AGENCY

40 CFR Part 52

[CA 214–0191; FRL–6563–2]

Approval and Promulgation of Implementation Plans; California State Implementation Plan Revision; Kern County Air Pollution Control District

AGENCY: Environmental Protection Agency (EPA).

ACTION: Proposed rule.

SUMMARY: EPA is proposing a limited approval and a simultaneous limited disapproval of revisions to the California State Implementation Plan (SIP) for the Kern County Air Pollution Control District (KCAPCD). The revisions concern Rule 427, stationary piston engines, for the control of oxides of nitrogen (NO_X) emissions.

The intended effect of proposing limited approval and a simultaneous limited disapproval of the rule is to regulate emissions of NO_X in accordance with the requirements of the Clean Air Act, as amended in 1990 (CAA or the Act). EPA's final action on the proposed rule will incorporate the rule into the federally approved SIP. EPA has evaluated the rule and is proposing a limited approval and a simultaneous limited disapproval under

provisions of the CAA regarding EPA action on SIP submittals and general rulemaking authority because these revisions do not fully meet the CAA provisions regarding plan submissions and requirements for nonattainment areas.

DATES: Comments must be received on or before April 21, 2000.

ADDRESSES: Comments may be mailed to: Andrew Steckel, Rulemaking Office, AIR–4, Air Division, U.S. Environmental Protection Agency, Region IX, 75 Hawthorne Street, San Francisco, CA 94105–3901.

Copies of the rule and EPA's evaluation report of the rule are available for public inspection at EPA's Region IX office during normal business hours. Copies of the submitted rule is also available for inspection at the following locations:

Environmental Protection Agency, Air Docket (6102), 401 ''M'' Street, S.W., Washington, D.C. 20460

California Air Resources Board, Stationary Source Division, Rule Evaluation Section, 2020 ''L'' Street, Sacramento, CA 95812

Kern County Air Pollution Control District, 2700 ''M'' Street, Suite 302, Bakersfield, CA 93301

FOR FURTHER INFORMATION CONTACT: Ed Addison, Rulemaking Office, AIR–4, Air Division, U.S. Environmental Protection Agency, Region IX, 75 Hawthorne Street, San Francisco, CA 94105–3901, Telephone: (415) 744–1160.

SUPPLEMENTARY INFORMATION:

I. Applicability

The rule being proposed for limited approval and a simultaneous limited disapproval into the California SIP is Kern County Air Pollution Control District (KCAPCD) Rule 427, Stationary Piston Engines (Oxides of Nitrogen). Rule 427 was submitted by the State of California to EPA on August 21, 1998.

II. Background

On November 15, 1990, the Clean Air Act Amendments of 1990 were enacted. Public Law 101–549, 104 Stat. 2399, codified at 42 U.S.C. 7401–7671q. The air quality planning requirements for the reduction of NO_X emissions through reasonably available control technology (RACT) are set out in section 182(f) of the Clean Air Act.

On November 25, 1992, EPA published a proposed rule entitled, ''State Implementation Plans; Nitrogen Oxides Supplement to the General Preamble; Clean Air Act Amendments of 1990 Implementation of Title I; Proposed Rule,'' (the NO_X Supplement) which describes and provides preliminary guidance on the requirements of section 182(f). The November 25, 1992, action should be referred to for further information on the NO_X requirements.

Section 182(f) of the Clean Air Act requires States to apply the same requirements to major stationary sources of NO_X (''major'' as defined in section 302 and sections 182(c), (d), and (e)) as are applied to major stationary sources of volatile organic compounds (VOCs), in moderate or above ozone nonattainment areas. KCAPCD is classified as serious;[1] therefore this area is subject to the RACT requirements of section 182(b)(2) and the November 15, 1992 deadline cited below.

Section 182(b)(2) requires submittal of RACT rules for major stationary sources of VOC (and NO_X) emissions (not covered by a pre-enactment control technologies guidelines (CTG) document or a post-enactment CTG document) by November 15, 1992. There were no NO_X CTGs issued before enactment and EPA has not issued a CTG document for any NO_X sources since enactment of the CAA. The RACT rule covering NO_X sources and submitted as SIP revisions require final installation of the actual NO_X controls as expeditiously as practicable, but no later than May 31, 1995.

This document addresses EPA's proposed action for Kern County Air Pollution Control District (KCAPCD), Rule 427, Stationary Piston Engines (Oxides of Nitrogen), adopted by the KCAPCD, on July 2, 1998. The State of California submitted Rule 427 to EPA on August 21, 1998. Rule 427 was found to be complete on October 2, 1998, pursuant to EPA's completeness criteria that are set forth in 40 CFR part 51, appendix V.[2]

NO_X emissions contribute to the production of ground level ozone and smog. KCAPCD Rule 427 specifies NO_X emission standards and was originally adopted as part of KCAPCD's effort to achieve the National Ambient Air Quality Standard (NAAQS) for ozone, and in response to the CAA requirements cited above. The following is EPA's evaluation and proposed action for the rule.

III. EPA Evaluation and Proposed Action

In determining the approvability of a NO_X rule, EPA must evaluate the rule for consistency with the requirements of the CAA and EPA regulations, as found in section 110 and part D of the CAA and 40 CFR part 51 (Requirements for Preparation, Adoption, and Submittal of Implementation Plans). Among those provisions is the requirement that a NO_X rule must, at a minimum, provide for the implementation of RACT for stationary sources of NO_X emissions. The EPA interpretation of these requirements, which forms the basis for today's action, appears in the NO_X Supplement (57 FR 55620) and various other EPA policy guidance documents.[3]

For the purpose of assisting State and local agencies in developing NO_X RACT rules, EPA prepared the NO_X Supplement to the General Preamble. In the NO_X Supplement, EPA provides preliminary guidance on how RACT will be determined for stationary sources of NO_X emissions. While most of the guidance issued by EPA on what constitutes RACT for stationary sources has been directed towards application for VOC sources, much of the guidance is also applicable to RACT for stationary sources of NO_X (see section 4.5 of the NO_X Supplement). In addition, pursuant to section 183(c), EPA is issuing alternative control technique documents (ACTs), that identify alternative controls for all categories of stationary sources of NO_X. The ACT documents will provide information on control technology for stationary sources that emit or have the potential to emit 25 tons per year or more of NO_X. However, the ACTs will not establish a presumptive norm for what is considered RACT for stationary sources of NO_X.

In addition, the California Air Resources Board (CARB) is developing a guidance document entitled, ''Proposed Determination of Reasonably Available Control Technology and Best Available Retrofit Control Technology for Stationary Internal Combustion Engines,'' Dec. 3, 1997. EPA has used CARB's proposed RACT Determination, dated Dec. 3, 1997, in evaluating Rule 427, for consistency with the CAA's RACT requirements while awaiting a final determination. In general, the guidance documents cited above, as well as other relevant and applicable guidance documents, have been set forth to ensure that submitted NO_X

[1] KCAPCD retained its designation of nonattainment and was classified by operation of law pursuant to sections 107(d) and 181(a) upon the date of enactment of the CAA. See 55 FR 56694 (November 6, 1991).

[2] EPA adopted the completeness criteria on February 16, 1990 (55 FR 5830) and, pursuant to section 110(k)(1)(A) of the CAA, revised the criteria on August 26, 1991 (56 FR 42216).

[3] ''Issues Relating to VOC regulation Cutpoints, Deficiencies, and Deviation, Clarification to Appendix D of November 24, 1987 **Federal Register** document'' (Blue Book) (notice of availability was published in the **Federal Register** on May 25, 1988).

RACT rules meet Federal RACT requirements and are fully enforceable and strengthen or maintain the SIP.

There is currently a January 25, 1996, version of Rule 427, Stationary Piston Engines (Oxides of Nitrogen), in the SIP.

Submitted Rule 427 includes the following provisions:

- General provisions including applicability, exemptions, and definitions.
- Exhaust emissions standards for oxides of nitrogen (NO_X).
- Compliance and monitoring requirements including compliance schedule, reporting requirements, monitoring and recordkeeping, and test methods.

Submitted Rule 427 contains the following significant modifications from the 1996 version:

- Exempts low use rate engines.
- Allows and clarifies representative engine testing.
- Clarifies recordkeeping requirements.

Rules submitted to EPA for approval as revisions to the SIP must be fully enforceable, must maintain or strengthen the SIP and must conform with EPA policy in order to be approved by EPA. When reviewing rules for SIP approvability, EPA evaluates enforceability elements such as test methods, recordkeeping, and compliance testing in addition to RACT guidance regarding emission limits.

EPA has evaluated Kern County Air Pollution Control District Rule 427 for consistency with the CAA, EPA regulations, and EPA policy and has found that KCAPCD Rule 427 contains the following deficiencies, which must be corrected pursuant to the section 182(a)(2)(A) requirement of part D of the CAA.

Section V: Engines between 50 and 250 bhp are not subject to NO_X emission limits or testing requirements. Since such engines can easily emit at least 25 tons per year of NO_X (the major source threshold for KACPCD), this rule does not fulfill the CAA section 182 requirement to implement RACT for all major sources. Although a similar version of section V was previously approved into the SIP, it needs to be modified to implement RACT. Emission limits should be included for engines larger than 50 bhp (as exist, for example, in analogous rules in other California Districts) and groups of smaller engines that total 25 tons per year of NO_X emissions. Annual NO_X emission tests and operational non-resettable totalizing time or fuel meters should also be required.

Section VIII:

C.1: The extended compliance test schedule: Allows for once every two years instead of annual source testing. To ensure enforceability of the emission limits and early identification of violations, the frequency of source testing should be increased to once every 8760 hours of operation or every two years, whichever is shorter, as recommended in the proposed CARB RACT Determination.

C.2.d: Group testing of engines: This provision relaxes the general requirement to annually test each affected engine by allowing testing of a representative sample of engines. Such representative sampling provisions must be carefully designed to assure consistency with RACT and enforceability requirements of the Act. We believe that addition of the following elements to the representative sampling requirements of the rule would assure consistency with enforceability and RACT requirements.

- The EPA policy provisions require, among other things, a 10 percent (%) or greater reduction in emissions for each individual engine beyond the emission limits established in compliance with section V.
- The number of engines tested should be the greater of either one engine, or one third of all identical engines in the group. The engines must be rotated in such a way that all engines are tested in a three year period.

A detailed discussion of these deficiencies can be found in the Technical Support Document for Rule 427, dated December 1, 1999, which is available from the U.S. EPA, Region IX office. Because of these deficiencies, EPA cannot grant approval of the rule under section 110(k)(3) and part D. In order to strengthen the SIP, EPA is proposing a limited approval and a simultaneous limited disapproval of KCAPCD's submitted Rule 427 under sections 110(k)(3) and 301(a) of the CAA because it contains deficiencies which must be corrected in order to fully meet the requirements of sections 182(a)(2), 182(b)(2), 182(f), of part D of the CAA. Under section 179(a)(2), if the Administrator disapproves a submission under section 110(k) for an area designated nonattainment, based on the submission's failure to meet one or more of the elements required by the Act, the Administrator must apply one of the sanctions set forth in section 179(b) unless the deficiency has been corrected within 18 months of such disapproval. Section 179(b) provides two sanctions available to the Administrator: highway funding and offsets. The 18 month period referred to in section 179(a) will begin on the effective date of EPA's final disapproval. Moreover, the final disapproval triggers the Federal implementation plan (FIP) requirement under section 110(c). It should be noted that the rule covered by this document has been adopted by the Kern County Air Pollution Control District and is currently in effect in the Kern County Air Pollution Control District. EPA's final disapproval action will not prevent the Kern County Air Pollution Control District or EPA from enforcing the rule.

IV. Administrative Requirements

A. Executive Order 12866

The Office of Management and Budget (OMB) has exempted this regulatory action from Executive Order 12866, Regulatory Planning and Review.

B. Executive Order 12875

Under Executive Order 12875, Enhancing the Intergovernmental Partnership, EPA may not issue a regulation that is not required by statute and that creates a mandate upon a State, local or tribal government, unless the Federal government provides the funds necessary to pay the direct compliance costs incurred by those governments, or EPA consults with those governments. If EPA complies by consulting, Executive Order 12875 requires EPA to provide to the Office of Management and Budget a description of the extent of EPA's prior consultation with representatives of affected State, local and tribal governments, the nature of their concerns, copies of any written communications from the governments, and a statement supporting the need to issue the regulation. In addition, Executive Order 12875 requires EPA to develop an effective process permitting elected officials and other representatives of State, local and tribal governments ''to provide meaningful and timely input in the development of regulatory proposals containing significant unfunded mandates.'' Today's rule does not create a mandate on State, local or tribal governments. The rule does not impose any enforceable duties on these entities. Accordingly, the requirements of section 1(a) of Executive Order 12875 does not apply to this rule.

C. Executive Order 13045

Protection of Children from Environmental Health Risks and Safety Risks (62 FR 19885, April 23, 1997), applies to any rule that: (1) Is determined to be ''economically significant'' as defined under Executive Order 12866, and (2) concerns an environmental health or safety risk that EPA has reason to believe may have a

disproportionate effect on children. If the regulatory action meets both criteria, the Agency must evaluate the environmental health or safety effects of the planned rule on children, and explain why the planned regulation is preferable to other potentially effective and reasonably feasible alternatives considered by the Agency. The rule is not subject to Executive Order 13045 because it does not involve decisions intended to mitigate environmental health or safety risks.

D. Executive Order 13084

Under Executive Order 13084, Consultation and Coordination with Indian Tribal Governments, EPA may not issue a regulation that is not required by statute, that significantly or uniquely affects the communities of Indian tribal governments, and that imposes substantial direct compliance costs on those communities, unless the Federal government provides the funds necessary to pay the direct compliance costs incurred by the tribal governments, or EPA consults with those governments. If EPA complies by consulting, Executive Order 13084 requires EPA to provide to the Office of Management and Budget, in a separately identified section of the preamble to the rule, a description of the extent of EPA's prior consultation with representatives of affected tribal governments, a summary of the nature of their concerns, and a statement supporting the need to issue the regulation. In addition, Executive Order 13084 requires EPA to develop an effective process permitting elected officials and other representatives of Indian tribal governments ''to provide meaningful and timely input in the development of regulatory policies on matters that significantly or uniquely affect their communities.'' Today's rule does not significantly or uniquely affect the communities of Indian tribal governments. Accordingly, the requirements of section 3(b) of Executive Order 13084 do not apply to this rule.

E. Regulatory Flexibility Act

The Regulatory Flexibility Act (RFA) generally requires an agency to conduct a regulatory flexibility analysis of any rule subject to notice and comment rulemaking requirements unless the agency certifies that the rule will not have a significant economic impact on a substantial number of small entities. Small entities include small businesses, small not-for-profit enterprises, and small governmental jurisdictions. The proposed rule will not have a significant impact on a substantial number of small entities because SIP approvals under section 110 and subchapter I, part D of the Clean Air Act do not create any new requirements but simply approve requirements that the State is already imposing. Therefore, because the Federal SIP approval does not create any new requirements, I certify that this action will not have a significant economic impact on a substantial number of small entities. Moreover, due to the nature of the Federal-State relationship under the Clean Air Act, preparation of flexibility analysis would constitute Federal inquiry into the economic reasonableness of state action. The Clean Air Act forbids EPA to base its actions concerning SIPs on such grounds. *Union Electric Co.,* v. *U.S. EPA,* 427 U.S. 246, 255–66 (1976); 42 U.S.C. 7410(a)(2).

F. Unfunded Mandates

Under section 202 of the Unfunded Mandates Reform Act of 1995 (''Unfunded Mandates Act''), signed into law on March 22, 1995, EPA must prepare a budgetary impact statement to accompany any proposed or final rule that includes a Federal mandate that may result in estimated annual costs to State, local, or tribal governments in the aggregate; or to private sector, of $100 million or more. Under section 205, EPA must select the most cost-effective and least burdensome alternative that achieves the objectives of the rule and is consistent with statutory requirements. Section 203 requires EPA to establish a plan for informing and advising any small governments that may be significantly or uniquely impacted by the rule.

EPA has determined that the approval action promulgated does not include a Federal mandate that may result in estimated annual costs of $100 million or more to either State, local, or tribal governments in the aggregate, or to the private sector. This Federal action approves pre-existing requirements under State or local law, and imposes no new requirements. Accordingly, no additional costs to State, local, or tribal governments, or to the private sector, result from this action.

List of Subjects in 40 CFR Part 52

Environmental protection, Air pollution control, Hydrocarbons, Incorporation by reference, Intergovernmental relations, Oxides of nitrogen Ozone, Reporting and record-keeping requirements, Volatile organic compounds.

Authority:

42 U.S.C. 7401 *et seq.*

Dated: March 10, 2000.

Felicia Marcus,

Regional Administrator, Region IX.

[FR Doc. 00–7125 Filed 3–21–00; 8:45 am]

BILLING CODE 6560–50–P

DEPARTMENT OF TRANSPORTATION

Research and Special Programs Administration

49 CFR Parts 190, 191, 192, and 195

[Docket No. RSPA–99–6106]

RIN 2137–AD35

Pipeline Safety: Periodic Updates to Pipeline Safety Regulations (1999)

AGENCY: Research and Special Programs Administration (RSPA), DOT.

ACTION: Notice of proposed rulemaking.

SUMMARY: This proposed rule is part of a periodic effort by RSPA to revise and update the pipeline safety regulations to improve clarity, ensure consistency, and remove unnecessary requirements on the regulated pipeline community. Revisions include incorporation by reference of the most recent editions of voluntary consensus standards and specifications to enable pipeline operators to utilize current technology, materials, and practices. This document also proposes to increase the pressure limitation for new thermoplastic pipe, to allow plastic pipe on bridges, to clarify welding requirements, to revise the definition of hazardous liquid pipeline accident, and to make numerous minor clarifications.

DATES: Comments on the subject of this proposed rule must be received on or before May 22, 2000.

ADDRESSES: Comments should reference Docket No. RSPA–99–6106, and be mailed to the Dockets Facility, U.S. Department of Transportation, Plaza 401, 400 Seventh Street, SW, Washington, DC 20590–0001. You should submit the original and one copy. If you wish to receive confirmation of receipt of your comments, you must include a stamped, self-addressed postcard. The Dockets Facility is open from 10:00 a.m. to 5:00 p.m., Monday through Friday, except on Federal holidays. The public may also submit or review comments in this docket by accessing the Dockets Management System's home page at http://dms.dot.gov. An electronic copy of any rulemaking document or comment may be downloaded from the OPS home page at http://ops.dot.gov or from the Government Printing Office

Electronic Bulletin Board Service at (202) 512–1661.

FOR FURTHER INFORMATION CONTACT: Richard D. Huriaux by telephone at (202) 366–4565, by fax at (202) 366–4566, by e-mail at richard.huriaux@rspa.dot.gov, or by mail at U.S. Department of Transportation, RSPA/Office of Pipeline Safety, Room 7128, 400 Seventh Street, SW, Washington, DC 20590–0001. Copies of this document or other material in the docket can be reviewed by accessing the Docket Management System's home page at http://dms.dot.gov. General information on the pipeline safety program is available at the Office of Pipeline Safety web site at http://ops.dot.gov.

SUPPLEMENTARY INFORMATION:

Background

This rulemaking is a periodic update of the pipeline safety regulations to ensure that the pipeline safety regulations incorporate the most current technical standards and specifications, to improve clarity, consistency, and accuracy, and to reduce unnecessary burdens on the regulated community.

In a March 1995 memorandum, President Clinton directed Federal regulatory agencies to, among other things, conduct a page-by-page review of all agency regulations, cutting or revising those that were obsolete, intrusive, or better handled by parties other than the Federal government (i.e., private business, State, or local government). In response to the President's directive, RSPA issued a final rule on May 24, 1996 (61 FR 26121) that updated references to voluntary specifications and standards. Subsequently, RSPA issued another periodic update on February 17, 1998, to incorporate by reference the latest editions of voluntary consensus standards and to make corrections and clarifications. RSPA intends to issue future periodic updates to ensure that the pipeline safety regulations reflect current practice and to improve compliance by the pipeline industry with safety standards.

Standards Incorporated by Reference

The ''National Technology Transfer and Advancement Act of 1995'' (Public Law 104–113) directs Federal agencies to use voluntary consensus standards in lieu of government-written standards whenever possible. Voluntary consensus standards are standards developed or adopted by voluntary bodies that develop, establish, or coordinate technical standards using agreed-upon procedures.

RSPA's Office of Pipeline safety participates in more than 25 national voluntary consensus standards committees. RPSA's policy is to adopt voluntary consensus standards when they are applicable. In recent years, RSPA has adopted dozens of voluntary consensus standards into its gas pipeline, hazardous liquid pipeline, and liquefied natural gas (LNG) regulations. RSPA has not adopted a government-written standard in lieu of a voluntary consensus standard and does not plan to do so in the future.

RSPA has reviewed the voluntary consensus standards currently referred to in the pipeline safety regulations and in its appendices, and proposes to adopt the latest editions of the standards that are incorporated by reference in 49 CFR Parts 192 and 195. The organizations responsible for producing these standards often update or revise them to incorporate the most current technology.

Parts 192 and 195 incorporate by reference all or portions of over 60 standards and specifications developed and published by technical organizations, including the American Petroleum Institute, American Gas Association, American Society of Mechanical Engineers, American Society for Testing and Materials, Manufacturers Standardization Society of the Valve and Fittings Industry, National Fire Protection Association, and Plastics Pipe Institute. The most recent editions of these documents represent a consensus on the best current practice and modern technology in the pipeline industry.

OPS proposes to adopt the most recent editions of the standards into the pipeline safety regulations. These are set forth by name and date in the proposed amendments to appendices A and B of Part 192 and § 195.3 of Part 195. The order and appearance in the CFR of the consensus standards has also been updated and clarified. In general, the only substantive change is reference the new edition and year of publication.

One entirely new standard is proposed for incorporation by reference in the gas pipeline safety regulations. We propose to adopt the Plastics Pipe Institute, Inc.'s technical recommendation, ''Policies and Procedures for Developing Hydrostatic Design Bases (HDB), Pressure Design Bases (PDB), and Minimum Required Strength (MRS) Ratings for Thermoplastic Piping Materials'' (PPI TR–3/2000). This standard would be referenced in the gas pipeline safety regulations at § 192.121, Design of plastic pipe. It will provide a method for determining hydrostatic design basis (HDB) for pipelines operating at any operating temperature by using the arithmetic interpolation procedure in Part E, Policy for determining long term strength (LTHS) by temperature interpolation, of PPI TR–3/2000. This will provide gas distribution pipeline operators with the flexibility to design safe plastic pipeline systems at any operating temperature.

In addition, RSPA proposes to update the addresses for each of the standards' organizations, to correct the numbering system, and to edit for clarity and typographical errors.

Petition to Limit Pressure of Thermoplastic Gas Pipe to a Maximum of 125 p.s.i.g.

On December 10, 1998 and November 23, 1999, the American Gas Association (AGA) petitioned RSPA to amend § 192.123 to allow the design pressure for thermoplastic pipe to be determined by its dimensions and the material's long-term strength as represented by the HDB in accordance with § 192.121 and to be limited to a maximum of 862 kPa (125 p.s.i.g.) instead of the current limitation of 689 kPa (100 p.s.i.g.). AGA stated that this increase in the pressure limitation for thermoplastic pipe used in gas distribution systems is clearly supported by the proven performance of modern polyethylene pipe and the successful operation of pipe at greater than 100 p.s.i.g. under the authority of waivers granted by state pipeline regulators. Further, their position is supported by laboratory and field analysis of the long-term hydrostatic strength of these piping materials. Copies of the AGA petitions are included in the docket.

This proposal would apply only to plastic pipe produced after the effective date of this rule. Existing pipes would continue to be limited to operation at the 689 kPa (100 p.s.i.g.). RSPA proposes to increase the pressure limitation for thermoplastic pipe to 862 kPa (125 p.s.i.g.).

Petition for Rule Change to Allow the Installation of Plastic Gas Pipe on Bridges

In 1993, the Gas Piping Technology Committee (GPTC) petitioned RSPA to allow the installation of plastic pipe on bridges. GPTC is designated as an American National Standards Institute standards committee for the purpose of developing and publishing the ''Guide for Gas Transmission and Distribution Piping Systems'', to assist natural gas pipeline operators in efforts to comply with Part 192, to comment on proposed amendments to Part 192, and to propose amendments to Part 192. RSPA's Office

of Pipeline Safety is represented on this committee.

GPTC requested that § 192.321 be amended to allow the use of plastic pipe on bridges provided that the plastic pipe is:

(1) Protected from mechanical damage, such as by installation in a metallic casing.

(2) Installed so that the temperature of the pipe will not exceed the limits specified in § 192.321.

(3) Protected from ultraviolet radiation.

In support of its petition the GPTC provided a technical report on *Installation of Plastic Gas Pipeline Across Bridges,* which is available in this docket.

Since 1993, RSPA has granted a number of waivers incorporating the GPTC conditions for installation of plastic pipe across bridges. There is no record of failure of plastic pipe that has been installed under these waivers. In addition, continued progress in the design, manufacture, and installation of plastic pipe have rendered it ever more fit for broad application in gas pipeline systems.

RSPA proposes to revise § 192.321 to allow the routine installation of plastic pipe on bridges subject to the conditions suggested by GPTC.

Confirmation or Revision of MAOP After a Change in Class Location

Section 192.611(d) allows 18 months for a gas pipeline operator to confirm or revise the maximum allowable operating pressure of a pipeline after a change in Class Location. A change is Class Location occurs when new buildings along a pipeline are ready for occupancy, not when the operator discovers that there are new buildings or completes its review. The time it takes for the operator to determine that the area has changed its Class Location and the time it takes to obtain the required environmental and land-use permits to complete the pressure testing to confirm a new MAOP may exhaust the current 18 month allowance. In addition, the internal budget process of the pipeline operators may cause further delay.

In light of these constraints on operators and the fact that there have been no pressure-related failures following class location changes, we propose to increase the allowable time to confirm or revise MAOP after a Class Location change from 18 months to 24 months.

Updates in Response to Recommendations on Welding in the SIRRC Report

In October 1997 the National Association of Pipeline Safety Representatives (NAPSR), the American Public Gas Association (APGA), and the American Gas Association (AGA) formed the State Industry Regulatory Review Committee (SIRRC), to discuss differences of opinion on NAPSR's proposed gas pipeline safety rule changes in Docket No. PS–124. AGA and APGA had proposed to coordinate discussions between the industry and NAPSR in an attempt to resolve those differences, as well as other items of mutual interest. NAPSR welcomed the opportunity to work with the industry, and passed a resolution in May of 1997 authorizing the NAPSR Liaison Committee to work with the industry representatives on these issues. The committee held four formal meetings on this initiative. At each meeting, the proposed PS–124 recommendations were discussed in-depth to ensure that representatives on both sides understood the issues from each of their perspectives. Members of the SIRRC agreed on many of the issues in the proposal (or subsequent modifications to the proposal), and agreed to disagree with some of the proposals. A copy of the *SIRRC Summary Report (April 26, 1999)* is available in this docket.

Although all 39 recommendations in the SIRRC report will be addressed in a subsequent rulemaking in Docket No. PS–124, several of the welding recommendations appear to be noncontroversial and will be dealt with in this periodic update docket. Specifically, SIRRC reached a consensus that § 192.255(a) should be amended to specify that welders must be qualified under ''welding procedures qualified under American Petroleum Institute (API), American Society of Mechanical Engineers (ASME), or other accepted pipeline welding standards.'' RSPA agrees that the specific references to the two widely accepted pipeline industry welding standards will make clear that operators should be using accepted welding standards in pipeline construction and repair. However, we are not aware of any ''other accepted pipeline welding standards'' that could be relied on by an operator for pipeline welding. In addition, we believe a more specific citation to the API and ASME standards is appropriate.

Therefore, RSPA proposes to amend § 192.255(a) to read ''(a) Except as provided in paragraph (b) of this section, each welder must be qualified in accordance with Section 6 of API 1104 or Section IX of the ASME Boiler and Pressure Vessel Code. However, a welder qualified under an earlier edition than listed in Appendix A of this part may weld but may not requalify under that earlier edition.'' RSPA commits to updating these references to accepted welding standards in periodic updates of the regulations, including the inclusion of additional pipeline welding standards as necessary.

SIRRC also proposed that § 192.241 be amended to make clear that visual inspection of welding must be conducted ''by an inspector qualified by appropriate training and experience.'' RSPA agrees and is proposing that this change be included in the pipeline safety rules.

Definition of Injury in Part 195

The hazardous liquid pipeline safety regulations at § 195.50 require an accident report for any event that includes a release of hazardous liquid from a pipeline with:

(1) An explosion or fire not intentionally set by the operator.

(2) Loss of 50 or more barrels of hazardous liquid.

(3) Escape to the atmosphere of more than 5 barrels a day of highly volatile liquids.

(4) Death of any person.

(5) Bodily harm to any person in one or more of the following:

—Loss of consciousness.
—Necessity to carry the person from the scene.
—Necessity for medical treatment.
—Disability which prevents the discharge of normal duties or the pursuit of normal activities beyond the day of the accident.

This means that even the most minor injury during a pipeline event can result in the entire accident being reportable if the person receives any ''medical treatment''. The lack of a definition of medical treatment means that any kind of treatment, even a bandage applied at the scene or out-patient services received at a local clinic could make the accident reportable, even if it does not meet any of the other requirements for reportability.

In contrast, the gas pipeline safety regulations define a reportable gas pipeline event as one that includes a release of gas from a pipeline with

(1) A death or personal injury requiring in-patient hospitalization,

(2) Estimated property damage of $50,000 or more, or

(3) Any event that is significant in the judgment of the operator.

For gas pipelines, an injury treated at the scene or at a local clinic would not

result in the incident being reportable, unless it meets one of the other requirements.

RSPA proposes to eliminate the reporting criteria discrepancy between Parts 192 and 195 to ensure that accident reporting is uniform for both gas and hazardous liquid pipelines. The reporting language in Part 192 was adopted before the language in Part 195 and embodies the original intent relative to the injury criteria for reportability of pipeline accidents. We do not believe that this change would cause any reportable hazardous liquid pipeline accidents to become non-reportable. For example, the 1994 San Jacinto River accident would still have been reportable based on product loss and property damage.

Therefore, RSPA proposes to revise § 195.50 by deleting the existing language in paragraph (e) and substituting the same language used for gas pipeline events, i.e., ''[a] personal injury necessitating in-patient hospitalization.''

Petition of the GPTC on Strength Test Requirements for Flanges

In a November 27, 1996 letter the GPTC noted that most gas operators ''have assumed that flange manufacturers test a prototype as described in 192.505(d)(2).'' This turns out to be incorrect. Rather, most manufacturers meet the requirements by use of ASME/ANSI B16.5, B16.47, or MSS SP44, which contain standard pressure ratings. In addition, flange manufacturers have developed ratings of nonstandard flanges through unit stress calculations as described in § 192.143.

GPTC stated that each part of a pipeline must be able to stand the internal gas pressures and other mechanical loadings without impairment of serviceability with unit stresses equivalent to those allowed for comparable material in the pipe. If a design based on unit stresses is impractical for a particular pipeline component, GPTC suggests that design be based on a pressure rating established by pressure testing that component or a prototype of the component.

To clarify this situation and ensure that flanges and other components of a pipeline system can safely contain anticipated pressures and loadings, GPTC urges that we add the following paragraph to 192.505(d): (3) Flanges and components carrying a pressure rating established through ASME/ANSI, MSS specification, or by unit strength calculations as described in 192.143, General Requirements, do not require a strength test.''

The proposed language incorporates this language as a new paragraph § 192.505(d)(3) to ensure that flanges and other components of pipeline systems can safely contain the pressures to which they are subjected in the course of pipeline operations.

Clarifications, Corrections, and Edits

This document revises the pipeline safety regulations to correct language or clarify meaning in a number of sections, including:

1. § 190.11—The telephone number for Office of Pipeline Safety information and assistance would be changed to (202) 366–4431.

2. § 190.233—The title of § 190.233 would be corrected to read ''Corrective action orders.''

3. § 191.7—The address for written reports would be changed to Room 7128.

4. § 192.3—The definition of *Transmission line* would be clarified by inserting a new paragraph in subsection (c) to make clear that the sentence, ''A large volume customer may receive similar volumes of gas as a distribution center, and includes factories, power plants, and institutional users of gas'', is a general comment on the entire definition, and not a modifier of only item (c).

5. § 195.58—The address for written reports would be revised to correct the room number to Room 7128.

6. § 195.440—The paragraph would be revised to indicate that the education program required by this section includes reporting of hazardous liquid pipeline emergencies to qualified one-call centers, as well as ''the operator or the fire, police, or other appropriate public officials.''

Rulemaking Analyses

Executive Order 12866

This final rule is not a significant regulatory action under section 3(f) of Executive Order 12866 (58 FR 51735) and, therefore, was not subject to review by the Office of Management and Budget (OMB). The final rule is not significant under the Regulatory Policies and Procedures of the Department of Transportation (44 FR 11034).

Executive Order 13132

The proposed rule has been analyzed in accordance with the principles and criteria contained in Executive Order 13132 (''Federalism''). This proposed rule does not propose any regulation that:

(1) Has substantial direct effected on the States, the relationship between the national government and the States, or the distribution of power and responsibilities among the various levels of government;

(2) Imposes substantial direct compliance costs on State and local governments; or

(3) Preempts state law.

Therefore, the consultation and funding requirements of Executive Order 13132 do not apply.

Executive Order 13084

The proposed rule has been analyzed in accordance with the principles and criteria contained in Executive Order 13084, ''Consultation and Coordination with Indian Tribal Governments.'' Because the proposed rules would not significantly or uniquely affect the Indian tribal governments, the funding and consultation requirements of Executive Order 13084 do not apply.

Regulatory Flexibility Act

This rulemaking will not impose additional requirements on pipeline operators, including small entities that operate regulated pipelines. Rather, the proposed rule clarifies parts of the pipeline safety regulations, incorporates the most recent editions of voluntary consensus standards, and provides additional operating flexibility to gas and hazardous liquid pipeline companies. Thus, this rulemaking may reduce costs to operators, including small entities. Based on the facts available about the expected impact of this rulemaking, I certify, under Section 605 of the Regulatory Flexibility Act (5 U.S.C. 605), that this rulemaking will not have a significant economic impact on a substantial number of small entities.

National Environmental Policy Act

We have analyzed the proposed rule changes for purposes of the National Environmental Policy Act (42 U.S.C. 4321 *et seq.*). Because the changes would require that alternative repair methods be as safe as the methods now allowed, we have preliminarily determined that the proposed changes would not significantly affect the quality of the human environment. An environmental assessment document is available for review in the docket.

Paperwork Reduction Act

There are no new information collection requirements in this final rule.

Impact on Business Processes and Computer Systems

We do not want to impose new requirements that would mandate business process changes when the

resources necessary to implement those requirements would otherwise be applied to ''Y2K'' or related computer problems. This proposed rule would not mandate business process changes or require modifications to computer systems. Because this proposed rule would not affect organizations' ability to respond to those problems, we are not proposing to delay the effectiveness of the requirements.

Unfunded Mandates Reform Act of 1995

This rule does not impose unfunded mandates under the Unfunded Mandates Reform Act of 1995. It does not result in costs of $100 million or more to either State, local, or tribal governments, in the aggregate, or to the private sector, and is the least burdensome alternative that achieves the objective of the rule.

List of Subjects

49 CFR Part 190

Administrative practice and procedures, Penalties, Pipeline safety.

49 CFR Part 191

Pipeline safety, Reporting and recordkeeping requirements.

49 CFR Part 192

Incorporation by reference, Natural gas, Pipeline safety, Reporting and recordkeeping requirements.

49 CFR Part 195

Anhydrous ammonia, Carbon dioxide, Incorporation by reference, Petroleum, Pipeline safety, Reporting and recordkeeping requirements.

In consideration of the foregoing, RSPA proposes to amend 49 CFR Parts 190, 191, 192, and 195 as follows:

PART 190—[AMENDED]

1. The authority citation for part 190 continues to read as follows:

Authority: 33 U.S.C. 1321; 49 U.S.C. 5101–5127, 60101 *et seq.*; Sec. 212–213, Pub. L. 104–121, 110 Stat. 857; 49 CFR 1.53.

2. Paragraph (a)(1) of § 190.11 would be amended by revising the last sentence to read as follows:

§ 190.11 Availability of informal guidance and interpretive assistance.

(a) *Availability of telephonic and Internet assistance.* (1) * * * The telephone number for OPS information is (202) 366–4431 and the OPS website can be accessed via the Internet at http://ops.dot.gov.

* * * * *

3. The heading of § 190.233 would be revised to read as follows:

§ 190.233 Corrective action orders.

* * * * *

PART 191— [AMENDED]

1. The authority citation for part 191 continues to read as follows:

Authority: 49 U.S.C. 5121, 60102, 60103, 60104, 60108, 60117, 60118, and 60124; and 49 CFR 1.53

2. Section 191.7 would be amended by revising the first sentence to read as follows:

§ 191.7 Addressee for written reports.

Each written report required by this part must be made to the Information Resources Manager, Office of Pipeline Safety, Research and Special Programs Administration, U.S. Department of Transportation, Room 7128, 400 Seventh Street, SW, Washington, DC 20590. * * *

PART 192—[AMENDED]

1. The authority citation for part 192 continues to read as follows:

Authority: 49 U.S.C. 5103, 60102, 60104, 60108, 60109, 60110, 60113, and 60118; and 49 CFR 1.53.

2. The definition of *Transmission line* in § 192.3 would be revised to read as follows:

§ 192.3 Definitions.

* * * * *

Transmission line means:

(1) A pipeline, other than a gathering line, that:

(i) Transports gas from a gathering line or storage facility to a distribution center, storage facility, or large volume customer that is not downstream from a distribution center;

(ii) Operates at a hoop stress of 20 percent or more of SMYS; or

(iii) Transports gas within a storage field.

(2) A large volume customer may receive similar volumes of gas as a distribution center, and includes factories, power plants, and institutional users of gas.

* * * * *

3. Section 192.121 would be amended by revising the definition for ''S'' following the equation to read as follows:

§ 192.121 Design of plastic pipe.

* * * * *

Where:

* * * * *

S=For thermoplastic pipe, the HDB determined in accordance with the listed specification at a temperature equal to 73°F (23 °C), 100°F (38°C), 120°F (49°C), or 140°F (60°C). In the absence an HDB established at the specified temperature, the HDB of a higher temperature may be used in determining a design pressure rating at the specified temperature by arithmetic interpolation using the procedure in Part E, Policy for determining long term strength (LTHS) by temperature interpolation, of PPI TR–3/2000. For reinforced thermosetting plastic pipe, 11,000 psi (75,842 kPa).

* * * * *

4. Section 192.123 would be amended by revising paragraphs (a) introductory text and (b)(2)(i) and adding paragraph (e) to read as follows:

§ 192.123 Design limitations for plastic pipe.

(a) Except as provided in paragraph (e) of this section, the design pressure may not exceed a gauge pressure of 689 kPa (100 p.s.i.g.) for plastic pipe used in:

* * * * *

(b) * * *

(2) * * *

(i) For thermoplastic pipe, the temperature at which the HDB used in the design formula under § 192.121 is determined. However, if the pipe was manufactured before May 18, 1978, and its HDB was determined at 73°F (23°C), it may be used at temperatures up to 100°F (38°C).

* * * * *

(e) The design pressure for thermoplastic pipe produced after **[effective date of final rule]** may exceed a gauge pressure of 689 kPa (100 p.s.i.g.) provided that:

(1) The design pressure does not exceed 862 kPa (125 p.s.i.g.);

(2) The material is a PE2406 or a PE3408 as specified within ASTM D2513;

(3) The pipe size is nominal pipe size (IPS) 12 or less; and

(4) The design pressure is determined in accordance with the design equation defined in § 192.121.

5. Paragraph (a) of § 192.145 would be revised to read as follows:

§ 192.145 Valves.

(a) Except for cast iron and plastic valves, each valve must meet the minimum requirements of API 6D. A valve may not be used under operating conditions that exceed the applicable pressure-temperature ratings contained in those requirements.

* * * * *

6. Section 192.225 would be amended by revising the section heading and paragraph (a) to read as follows:

§ 192.225 Welding procedures.

(a) Welding must be performed by a qualified welder in accordance with welding procedures qualified under Section 5 of API 1104 or Section IX of

the ASME Boiler and Pressure Vessel Code. The quality of the test welds used to qualify the procedure shall be determined by destructive testing.

* * * * *

7. Paragraph (a) of § 192.227 would be revised to read as follows:

§ 192.227 Qualification of welders.

(a) Except as provided in paragraph (b) of this section, each welder must be qualified in accordance with Section 6 of API 1104 or Section IX of the ASME Boiler and Pressure Vessel Code. However, a welder qualified under an earlier edition than listed in Appendix A of this part may weld but may not requalify under that earlier edition.

* * * * *

8. Paragraph (c)(1) of § 192.229 would be revised to read as follows:

§ 192.229 Limitations on welders.

* * * * *

(c) * * *

(1) May not weld on pipe to be operated at a pressure that produces a hoop stress of 20 percent or more of SMYS unless within the preceding 7½ calendar months, but at least twice each calendar year, the welder has had one weld tested and found acceptable under section 6 or 9 of API 1104, except that a welder qualified under an earlier edition previously listed in Appendix A of this part may weld but may not requalify under that earlier edition; and

* * * * *

9. Section 192.241 would be amended by revising paragraph (a) introductory text and the last sentence of paragraph (c) to read as follows:

§ 192.241 Inspection and test of welds.

(a) Visual inspection of welding must be conducted by an inspector qualified by appropriate training and experience to ensure that:

* * * * *

(c) * * * However, if a girth weld is unacceptable under those standards for a reason other than a crack, and if Appendix A to API 1104 applies to the weld, the acceptability of the weld may be further determined under that appendix.

10. The heading of § 192.283 would be revised to read as follows:

§ 192.283 Plastic pipe: Qualifying joining procedures.

* * * * *

11. The heading of § 192.285 would be revised to read as follows:

§ 192.285 Plastic pipe: Qualifying persons to make joints.

* * * * *

12. The heading of § 192.287 would be revised to read as follows:

§ 192.287 Plastic pipe: Inspection of joints.

* * * * *

13. Section 192.321 would be amended by revising paragraph (a) and adding paragraph (h) to read as follows:

§ 192.321 Installation of plastic pipe.

(a) Plastic pipe must be installed below ground level except as provided by paragraphs (g) and (h) of this section.

* * * * *

(h) Plastic pipe may be installed on bridges provided that it is:

(1) Installed with protection from mechanical damage, such as installation in a metallic casing;

(2) Protected from ultraviolet radiation; and

(3) Not allowed to exceed the pipe temperature limits specified in § 192.123.

14. Section 192.505 would be amended by revising paragraphs (d)(1), (d)(2), and (d)(3) to read as follows:

§ 192.505 Strength test requirements for steel pipeline to operate at a hoop stress of 30 percent or more of SMYS.

* * * * *

(d) * * *

(1) The component was tested to at least the pressure required for the pipeline to which it is being added;

(2) The component was manufactured under a quality control system that ensures that each item manufactured is at least equal in strength to a prototype and that the prototype was tested to at least the pressure required for the pipeline to which it is being added; or

(3) The component carries a pressure rating established through ASME/ANSI, MSS specification, or a pressure rating established by unit strength calculations as described in § 192.143.

* * * * *

15. Paragraph (d) of § 192.611 would be revised to read as follows:

§ 192.611 Change in class location: Confirmation or revision of maximum allowable operating pressure.

* * * * *

(d) Confirmation or revision of the maximum allowable operating pressure that is required as a result of a study under § 192.609 must be completed within 24 months of the change in class location. Pressure reduction under paragraph (a) (1) or (2) of this section within the 24-month period does not preclude establishing a maximum allowable operating pressure under paragraph (a)(3) of this section at a later date.

16. Section 192.614 would be amended by republishing paragraph (d) introductory text and revising paragraphs (c)(5), (d)(1), (d)(2), and (e) introductory text to read as follows:

§ 192.614 Damage prevention program.

* * * * *

(c) * * *

(5) Provide for temporary marking of buried pipelines in the area of excavation activity before the activity begins, except in emergencies.

* * * * *

(d) A damage prevention program under this section is not required for the following pipelines:

(1) Pipelines located offshore.

(2) Pipelines to which access is physically controlled by the operators.

* * * * *

(e) Pipelines operated by persons other than municipalities (including operators of master meter systems) whose primary activity does not include the transportation of gas need not comply with the following:

* * * * *

17. Paragraph (b)(2) of § 192.723 would be revised to read as follows:

§ 192.723 Distribution systems: Leakage surveys.

* * * * *

(b) * * *

(2) A leakage survey with leak detector equipment must be conducted outside of business districts as frequently as necessary at intervals not exceeding 63 months, but at least once every 5 calendar years. However, for cathodically unprotected distribution lines subject to § 192.465(e) on which electrical surveys for corrosion are impractical, leakage surveys must be conducted at intervals not exceeding 39 months, but at least once every 3 calendar years.

18. Appendix A of Part 192 would be revised to read as follows:

Appendix A to Part 192—Incorporated by Reference

I. List of Organizations and Addresses

A. American Gas Association (AGA), 400 North Capitol Street, NW, Washington, DC 20001.

B. American Petroleum Institute (API), 1220 L Street, NW, Washington, DC 20005.

C. American Society for Testing and Materials (ASTM), 100 Barr Harbor Drive, West Conshohocken, PA 19428.

D. American Society of Mechanical Engineers (ASME), 3 Park Avenue, New York, NY 10016-5990.

E. Manufacturers Standardization Society of the Valve and Fittings Industry, Inc. (MSS), 127 Part Street, NW, Vienna, VA 22180.

F. National Fire Protection Association (NFPA), 1 Batterymarch Park, P.O. Box 9101, Quincy, MA 02269–9101.

G. Plastics Pipe Institute, Inc. (PPI), 1825 Connecticut Avenue, NW, Suite 680, Washington, DC 20009.

II. Documents Incorporated by Reference (Numbers in Parentheses Indicate Applicable Editions)

A. American Gas Association (AGA):

(1) AGA Pipeline Research Committee, Project PR–3–805, ''A Modified Criterion for Evaluating the Remaining Strength of Corroded Pipe'' (December 22, 1989).

B. American Petroleum Institute (API):

(1) API Specification 5L ''Specification for Line Pipe'' (42nd edition, 2000)

(2) API Recommended Practice 5L1 ''Recommended Practice for Railroad Transportation of Line Pipe'' (4th edition, 1990).

(3) API Specification 6D ''Specification for Pipeline Valves (Gate, Plug, Ball, and Check Valves)'' (21st edition, 1994).

(4) API 1104 ''Welding of Pipelines and Related Facilities'' (19th edition, 1999).

C. American Society for Testing and Materials (ASTM):

(1) ASTM Designation: A 53 ''Standard Specification for Pipe, Steel, Black and Hot-Dipped, Zinc-Coated, Welded and Seamless'' (A53–99).

(2) ASTM Designation: A106 ''Standard Specification for Seamless Carbon Steel Pipe for High-Temperature Service'' (A106–99).

(3) ASTM Designation: A333/A333M ''Standard Specification for Seamless and Welded Steel Pipe for Low-Temperature Service'' (A333/A333M–99).

(4) ASTM Designation: A372/A372M ''Standard Specification for Carbon and Alloy Steel Forgings for Thin-Walled Pressure Vessels'' (A372/A372M–99).

(5) ASTM Designation: A381 ''Standard Specification for Metal-Arc-Welded Steel Pipe for Use With High-Pressure Transmission Systems'' (A381–96).

(6) ASTM Designation: A671 ''Standard Specification for Electric-Fusion-Welded Steel Pipe for Atmospheric and Lower Temperatures'' (A671–96).

(7) ASTM Designation: A672 ''Standard Specification for Electric-Fusion-Welded Steel Pipe for High-Pressure Service at Moderate Temperatures'' (A672–96).

(8) ASTM Designation: A691 ''Standard Specification for Carbon and Alloy Steel Pipe, Electric-Fusion-Welded for High-Pressure Service at High Temperatures'' (A691–98).

(9) ASTM Designation: D638 ''Standard Test Method for Tensile Properties of Plastics'' (D638–97).

(10) ASTM Designation: D2513 ''Standard Specification for Thermoplastic Gas Pressure Pipe, Tubing, and Fittings'' (D2513–87 edition for § 192.63(a)(1), otherwise D2513–98).

(11) ASTM Designation: D 2517 ''Standard Specification for Reinforced Epoxy Resin Gas Pressure Pipe and Fittings'' (D2517–98)

(12) ASTM Designation: F1055 ''Standard Specification for Electrofusion Type Polyethylene Fittings for Outside Diameter Controlled Polyethylene Pipe and Tubing'' (F1055–98).

D. The American Society of Mechanical Engineers (ASME):

(1) ASME/ANSI B16.1 ''Cast Iron Pipe Flanges and Flanged Fittings'' (1998).

(2) ASME/ANSI B16.5 ''Pipe Flanges and Flanged Fittings'' (1996, includes 1998 Addenda).

(3) ASME/ANSI B31G ''Manual for Determining the Remaining Strength of Corroded Pipelines'' (1991).

(4) ASME/ANSI B31.8 ''Gas Transmission and Distribution Piping systems'' (1995).

(5) ASME Boiler and Pressure Vessel Code, Section I ''Power Boilers'' (1998).

(6) ASME Boiler and Pressure Vessel Code, Section VIII, Division 1 ''Pressure Vessels'' (1998).

(7) ASME Boiler and Pressure Vessel Code, Section VIII, Division 2 ''Pressure Vessels: Alternative Rules'' (1998).

(8) ASME Boiler and Pressure Vessel Code, Section IX ''Welding and Brazing Qualifications'' (1998).

E. Manufacturers Standardization Society of the Valve and Fittings Industry, Inc. (MSS):

(1) MSS SP44–96 ''Steel Pipe Line Flanges'' (includes 1996 errata) (1996).

(2) [Reserved]

F. National Fire Protection Association (NFPA):

(1) NFPA 30 ''Flammable and Combustible Liquids Code'' (1996).

(2) ANSI/NFPA 58 ''Standard for the Storage and Handling of Liquefied Petroleum Gases'' (1998).

(3) ANSI/NFPA 59 ''Standard for the storage and Handling of Liquefied Petroleum Gases at Utility Gas Plants'' (1998).

(4) ANSI/NFPA 70 ''National Electrical Code'' (1999).

G. Plastics Pipe Institute, Inc. (PPI):

(1) PPI TR–3/2000 ''Policies and Procedures for Developing Hydrostatic Design Bases (HDB), Pressure Design Bases (PDB), and Minimum Required Strength (MRS) Ratings for Thermoplastic Piping Materials'' (2000).

19. Appendix B to Part 192 would be amended by revising part I and the heading of part II.A. to read as follows:

Appendix B to Part 192—Qualification of Pipe

I. Listed Pipe Specifications (Numbers in Parentheses Indicate Applicable Editions)

API 5L—Steel pipe (2000)
ASTM A 53–Steel pipe (A 53–99).
ASTM A 106—Steel pipe (A 106–99)
ASTM A 333/A 333M—Steel pipe (A 333/A 333M–99)
ASTM A 381—Steel pipe (A 381–96)
ASTM D 671—Steel pipe (A 671–96)
ASTM D 672—Steel pipe (A 672–96)
ASTM D 691—Steel pipe (A 691–98)
ASTM D 2513—Thermoplastic pipe and tubing (D 2513–98)
ASTM D 2517—Thermosetting plastic pipe and tubing (D 2517–98)

II. Steel Pipe of Unknown or Unlisted Specification

A. *Bending properties.* * * *

* * * * *

PART 195—[AMENDED]

1. The authority citation for part 195 continues to read as follows:

Authority: 49 U.S.C. 5103, 60102, 60104, 60108, 60109, 60118; and 49 CFR 1.53

2. Section 195.2 would be amended by adding a definition in alphabetical order to read as follows:

§ 195.2 Definitions.

* * * * *

Maximum operating pressure (MOP) means the maximum pressure at which a pipeline or segment of a pipeline may be normally operated under this part.

* * * * *

3. Section 195.3 would be amended by revising paragraphs (b) and (c) to read as follows:

§ 195.3 Matter incorporated by reference.

* * * * *

(b) All incorporated materials are available for inspection in the Research and Special Programs Administration, 400 Seventh Street, SW., Washington, DC, and at the office of the Federal Register, 800 North Capitol Street, NW., Suite 700, Washington, DC. These materials have been approved for incorporation by reference by the Director of the Federal Register in accordance with 5 U.S.C. 552(a) and 1 CFR part 51. In addition, materials incorporated by reference are available as follows:

(1) American Gas Association (AGA), 400 North Capitol Street, NW, Washington, DC 20001.

(2) American Petroleum Institute (API), 1220 L Street, NW, Washington, DC 20005.

(3) American Society of Mechanical Engineers (ASME), 3 Park Avenue, New York, NY 10016-5990.

(4) Manufacturers Standardization Society of the Valve and Fittings Industry, Inc. (MSS), 127 Part Street, NW, Vienna, VA 22180.

(5) American Society for Testing and Materials (ASTM), 100 Barr Harbor Drive, West Conshohocken, PA 19428.

(6) National Fire Protection Association (NFPA), 1 Batterymarch Park, P.O. Box 9101, Quincy, MA 02269–9101.

(c) The full titles of publications incorporated by reference wholly or partially in this part are as follows. Numbers in parentheses indicate applicable editions:

(1) American Gas Association (AGA):

(i) AGA Pipeline Research Committee, Project PR–3–805, ''A Modified Criterion for Evaluating the Remaining Strength of Corroded Pipe'' (December 22, 1989). The RSTRENG program may be used for calculating remaining strength.

(ii) [Reserved]

(2) American Petroleum Institute (API):

(i) API Specification 5L ''Specification for Line Pipe'' (42nd edition, 2000)

(ii) API Specification 6D ''Specification for Pipeline Valves (Gate, Plug, Ball, and Check Valves)'' (21st edition, 1994).

(iii) API Specification 12F ''Specification for Shop Welded Tanks for Storage of Production Liquids'' (11th edition, November 1994).

(iv) API 510 ''Pressure Vessel Inspection Code: Maintenance Inspection, Rating, Repair, and Alteration'' (8th edition, June 1997).

(v) API Standard 620 ''Design and Construction of Large, Welded, Low-Pressure Storage Tanks'' (8th edition, 1990).

(vi) API 650 ''Welded Steel Tanks for Oil Storage'' (1998).

(vii) API Recommended Practice 651 ''Cathodic Protection of Aboveground Petroleum Storage Tanks'' (2nd edition, December 1997).

(viii) API Recommended Practice 652 ''Lining of Aboveground Petroleum Storage Tank Bottoms'' (2nd edition, December 1997).

(ix) API Standard 653 ''Tank Inspection, Repair, Alteration, and Reconstruction'' (2nd edition, December 1995, including Addenda 1, December 1996).

(x) API 1104 ''Welding of Pipelines and Related Facilities'' (19th edition, 1999).

(xi) API Standard 2000 ''Venting Atmospheric and Low-Pressure Storage Tanks'' (4th edition, September 1992).

(xii) API Recommended Practice 2003 ''Protection Against Ignitions Arising out of Static, Lightning, and Stray Currents'' (6th edition, December 1998).

(xiii) API Publication 2026 ''Safe Access/Egress Involving Floating Roofs of Storage Tanks in Petroleum Service'' (2nd edition, April 1998).

(xiv) API Recommended Practice 2350 ''Overfill Protection for Storage Tanks In Petroleum Facilities'' (2nd edition, January 1996).

(xv) API Standard 2510 ''Design and Construction of LPG Installations'' (7th edition, May 1995).

(3) American Society of Mechanical Engineers (ASME):

(i) ASME/ANSI B16.9 ''Factory-Made Wrought Steel Buttwelding Fittings'' (1993).

(ii) ASME/ANSI B31.4 ''Pipeline Transportation Systems for Liquid Hydrocarbons and Other Liquids'' (1998).

(iii) ASME/ANSI B31.8 ''Gas Transmission and Distribution Piping Systems'' (1995).

(iv) ASME/ANSI B31G ''Manual for Determining the Remaining Strength of Corroded Pipelines'' (1991).

(v) ASME Boiler and Pressure Vessel Code, Section VIII ''Pressure Vessels,'' Divisions 1 and 2 (1998).

(vi) ASME Boiler and Pressure Vessel Code, Section IX ''Welding and Brazing Qualifications'' (1998).

(4) Manufacturers Standardization Society of the Valve and Fittings Industry, Inc. (MSS):

(i) MSS SP–75 ''Specification for High Test Wrought Butt Welding Fittings'' (1993).

(ii) [Reserved]

(5) American Society for Testing and Materials (ASTM):

(i) ASTM Designation: A53 ''Standard Specification for Pipe, Steel, Black and Hot-Dipped, Zinc-Coated Welded and Seamless'' (A53–99).

(ii) ASTM Designation: A106 ''Standard Specification for Seamless Carbon Steel Pipe for High-Temperature Service'' (A106–99).

(iii) ASTM Designation: A 333/A 333M ''Standard Specification for Seamless and Welded Steel Pipe for Low-Temperature Service'' (A 333/A 333M–99).

(iv) ASTM Designation: A 381 ''Standard Specification for Metal-Arc-Welded Steel Pipe for Use With High-Pressure Transmission Systems'' (A 381–96).

(v) ASTM Designation: A 671 ''Standard Specification for Electric-Fusion-Welded Steel Pipe for Atmospheric and Lower Temperatures'' (A 671–96).

(vi) ASTM Designation: A 672 ''Standard Specification for Electric-Fusion-Welded Steel Pipe for High-Pressure Service at Moderate Temperatures'' (A 672–96).

(vii) ASTM Designation: A 691 ''Standard Specification for Carbon and Alloy Steel Pipe Electric-Fusion-Welded for High-Pressure Service at High Temperatures'' (A 691–98).

(6) National Fire Protection Association (NFPA):

(i) ANSI/NFPA 30 ''Flammable and Combustible Liquids Code'' (1996).

(ii) [Reserved]

4. Paragraph (e) of § 195.50 would be revised to read as follows:

§ 195.50 Reporting accidents.

* * * * *

(e) A personal injury necessitating in-patient hospitalization.

* * * * *

5. Section 195.58 would be amended by revising the first sentence to read as follows:

§ 195.58 Address for written reports.

Each written report required by this subpart must be made to the Information Resources Manager, Office of Pipeline Safety, Research and Special Programs Administration, U.S. Department of Transportation, Room 7128, 400 Seventh Street, SW., Washington, DC 20590. * * *

6. Section 195.214 would be amended by revising the section heading and paragraph (a) to read as follows:

§ 195.214 Welding procedures.

(a) Welding must be performed by a qualified welder in accordance with welding procedures qualified under Section 5 of API 1104 or Section IX of the ASME Boiler and Pressure Vessel Code. The quality of the test welds used to qualify the procedure shall be determined by destructive testing.

* * * * *

7. Section 195.222 would be revised to read follows:

§ 195.222 Welders: Qualification of welders.

Each welder must be qualified in accordance with Section 6 of API 1104 or Section IX of the ASME Boiler and Pressure Vessel Code, except that a welder qualified under an earlier edition than listed in 195.3 may weld but may not requalify under that earlier edition.

8. Paragraph (b) of § 195.228 would be revised to read as follows:

§ 195.228 Welds and welding inspection: Standards of acceptability.

* * * * *

(b) The acceptability of a weld is determined according to the standards in Section 9 of API 1104. However, if a girth weld is unacceptable under those standards for a reason other than a crack, and if Appendix A to API 1104 applies to the weld, the acceptability of the weld may be determined under that appendix.

9. Section 195.440 would be amended by revising the first sentence to read as follows:

§ 195.440 Public education.

Each operator shall establish a continuing education program to enable the public, appropriate government organizations and persons engaged in excavation-related activities to recognize a hazardous liquid or a carbon dioxide pipeline emergency and to report it to the qualified one-call system, the operator, or the fire, police, or other appropriate public officials. * * *

Issued in Washington, DC on March 8, 2000.

Richard B. Felder,

Associate Administrator for Pipeline Safety.

[FR Doc. 00–6353 Filed 3–21–00; 8:45 am]

BILLING CODE 4910–60–P

DEPARTMENT OF TRANSPORTATION

Federal Railroad Administration

49 CFR Parts 222 and 229

[Docket No. FRA–1999–6439, Notice No. 3; Docket No. FRA–1999–6440]

RIN 2130–AA71

Use of Locomotive Horns at Highway-Rail Grade Crossings

AGENCY: Federal Railroad Administration (FRA), Department of Transportation (DOT).

ACTION: Notice of public hearings.

SUMMARY: On January 13, 2000 (65 FR 2230), FRA published a Notice of Proposed Rulemaking (NPRM) on the Use of Locomotive Horns at Highway-Rail Grade Crossings (Docket No. FRA–1999–6439). On the same date FRA released a Draft Environmental Assessment (DEIS) (Docket No. FRA–1999–6440) pertaining to the proposals contained in the NPRM. In both documents, FRA stated that public hearings would be held in a number of locations throughout the country. On February 15, 2000 (65 FR 7483), FRA published in the **Federal Register** a document regarding hearings to be held, combined hearings on the NPRM and DEIS to be held in: Washington, D.C.; Los Angeles, California; Pendleton, Oregon; Ft. Lauderdale, Florida; and Salem, Massachusetts. FRA stated that a further document will be published and posted on FRA's web site *(http://fra.dot.gov)* regarding hearings to be held in the remaining locations listed in the NPRM: Berea, Ohio; South Bend, Indiana; and Chicago, Illinois. This document provides information pertaining to those hearings as well as repeating the information contained in the original hearing document. At this time, although hearing dates have been established, specific hearing sites in Chicago, South Bend, and Berea have not been finalized. When final site arrangements have been made, FRA will publish a document in the **Federal Register** and post the additional information on its web site.

DATES: *Public Hearings:* Public hearings will be held in:

1. Washington, D.C. on March 6, 2000, beginning at 9 a.m.;
2. Los Angeles area, California on March 15, 2000, beginning at 9 a.m.;
3. Pendleton, Oregon on March 17, 2000, beginning at 9 a.m.;
4. Ft. Lauderdale, Florida on March 28, 2000, beginning at 9 a.m.;
5. Salem, Massachusetts on April 3, 2000, beginning at 9 a.m.;
6. South Bend, Indiana on April 10, 2000, beginning at 9 a.m.;
7. Chicago, Illinois area on—April 25, 2000, times to be determined,
   April 26, 2000, times to be determined,
   April 27, 2000; times to be determined; and
8. Berea, Ohio on May 1, 2000, times to be determined.

Please see Supplementary Information below for further information concerning participation in the public hearings.

ADDRESSES: *Public Hearings*: Public hearings will be held at the following locations:

1. *Washington DC:* Federal Aviation Administration Auditorium, Third Floor, Federal Office Building 10A, 800 Independence Avenue, S.W., Washington, D.C. 20591;
2. *Los Angeles area:* Doubletree Hotel, Catalina II Room, 3050 Bristol Street, Costa Mesa, CA 92626;
3. *Pendleton, Oregon:* City Council Chambers, Pendleton City Hall, 500 Southwest Dorian Avenue, Pendleton, OR 97801;
4. *Ft. Lauderdale, Florida:* Doubletree Oceanfront Hotel, 440 Seabreeze Blvd, Fort Lauderdale, FL 33316;
5. *Salem, Massachusetts:* National Park Service Visitor Center—Auditorium, 2 New Liberty Street, Salem, MA 01970;
6. *South Bend, Indiana:* Specific location to be determined;
7. *Chicago, Illinois:* Specific locations to be determined; and
8. *Berea, Ohio:* Specific location to be determined.

FRA Docket Clerk: Docket Clerk, Office of Chief Counsel, Mail Stop 10, FRA, 1120 Vermont Avenue, NW, Washington, D.C. 20590. E-mail address for the FRA Docket Clerk is renee.bridgers@fra.dot.gov.

FOR FURTHER INFORMATION CONTACT: Ron Ries, Office of Safety, FRA, 1120 Vermont Avenue, S.W., Washington, D.C. 20590 (telephone: 202–493–6299); or Mark Tessler, Office of Chief Counsel, FRA, 1120 Vermont Avenue, S.W., Washington, D.C. 20590 (telephone: 202–493–6038).

SUPPLEMENTARY INFORMATION: Any person wishing to provide testimony at one of the public hearings should notify FRA's Docket Clerk at the address above at least three working days prior to the date of the hearing. The notification should also provide either a telephone number or e-mail address at which the person may be contacted. If a participant will be representing an organization, please indicate the name of the organization.

FRA will attempt to accommodate all persons wishing to provide testimony, however depending on the number of people wishing to participate, FRA may find it necessary to limit the length of oral comments to accommodate as many people as possible. Participants may wish to submit a complete written statement for inclusion in the record, while orally summarizing the points made in that statement.

Issued in Washington, D.C. on March 10, 2000.

Michael T. Haley,

Deputy Chief Counsel, Federal Railroad Administration.

[FR Doc. 00–6445 Filed 3–21–00; 8:45 am]

BILLING CODE 4910–06–P

Notices

Federal Register

Vol. 65, No. 56

Wednesday, March 22, 2000

This section of the FEDERAL REGISTER contains documents other than rules or proposed rules that are applicable to the public. Notices of hearings and investigations, committee meetings, agency decisions and rulings, delegations of authority, filing of petitions and applications and agency statements of organization and functions are examples of documents appearing in this section.

DEPARTMENT OF AGRICULTURE

Office of the Secretary

Commission on 21st Century Production Agriculture

ACTION: Notice of meeting.

SUMMARY: The U.S. Department of Agriculture (USDA) has established the Commission on 21st Century Production Agriculture. In accordance with Section 10(a)(2) of the Federal Advisory Committee Act (FACA), notice is hereby given of a meeting in April of the Commission on 21st Century Production Agriculture. The purpose of this meeting on April 10 will be to address issues regarding dairy policy. On April 11–12, coordination of and issues regarding the final report will be discussed. This meeting is open to the public.

PLACE, DATE, AND TIME OF MEETING: This meeting will be held April 10, 2000 from 1:00 pm–5:00 pm EST in Room 108–A, Whitten Building; April 11, 2000 from 9:00 am–5:00 pm EST in Room 108–A, Whitten Building; April 12, 2000 from 9:00 am–3:00 pm EST in Room 108–A, Whitten Building.

FOR FURTHER INFORMATION CONTACT: Mickey Paggi on (202–720–3139), Director, Commission on 21st Century Production Agriculture, Room 3702 South Building, 1400 Independence Avenue, SW, Washington, DC 20250–0524.

Keith J. Collins,

Chief Economist.

[FR Doc. 00–7036 Filed 3–21–00; 8:45 am]

BILLING CODE 3410–01–M

DEPARTMENT OF AGRICULTURE

Animal and Plant Health Inspection Service

[Docket No. 00–018–1]

Notice of Request for Extension of Approval of an Information Collection

AGENCY: Animal and Plant Health Inspection Service, USDA.

ACTION: Extension of approval of an information collection; comment request.

SUMMARY: In accordance with the Paperwork Reduction Act of 1995, this notice announces the Animal and Plant Health Inspection Service's intention to request an extension of approval of an information collection in support of the Karnal bunt regulations.

DATES: We invite you to comment on this docket. We will consider all comments that we receive by May 22, 2000.

ADDRESSES: Please send your comment and three copies to: Docket No. 00–018–1, Regulatory Analysis and Development, PPD, APHIS, Suite 3C03, 4700 River Road, Unit 118, Riverdale, MD 20737–1238. Please state that your comment refers to Docket No. 00–018–1.

You may read any comments that we receive on this docket in our reading room. The reading room is located in room 1141 of the USDA South Building, 14th Street and Independence Avenue, SW., Washington, DC. Normal reading room hours are 8 a.m. to 4:30 p.m., Monday through Friday, except holidays. To be sure someone is there to help you, please call (202) 690–2817 before coming.

APHIS documents published in the **Federal Register**, and related information, including the names of organizations and individuals who have commented on APHIS dockets, are available on the Internet at http://www.aphis.usda.gov/ppd/rad/webrepor.html.

FOR FURTHER INFORMATION CONTACT: For information regarding the Karnal bunt regulations, contact Dr. Vedpal S. Malik, National Karnal Bunt Coordinator, PPQ, APHIS, 4700 River Road Unit 134, Riverdale, MD 20737–1236; (301) 734–6774. For copies of more detailed information on the information collection, contact Ms. Celeste Sickles, APHIS' Information Collection Coordinator, at (301) 734–7477.

SUPPLEMENTARY INFORMATION:

Title: Karnal Bunt.

OMB Number: 0579–0121.

Expiration Date of Approval: April 30, 2000.

Type of Request: Extension of approval of an information collection.

Abstract: We have regulations in place to prevent the interstate spread of Karnal bunt, a fungal disease of wheat. These regulations restrict the interstate movement of wheat plants and plant parts (including grain, seed, and straw) from areas where Karnal bunt has been detected. The regulations concerning interstate movements require the use of limited permits, certificates, compliance agreements, and other documents that are needed to inform the public of our requirements and authorize the interstate movement of regulated articles.

In addition, our regulations have offered compensation as part of our Karnal bunt regulatory program since the 1995–1996 crop season. We pay this compensation to reduce the economic effects of our Karnal bunt quarantine on wheat producers and other individuals and to help obtain their cooperation in our Karnal bunt eradication efforts. Our regulations regarding compensation require program participants to engage in several information collection activities (including the completion of a Karnal bunt compensation worksheet and compensation form) that are necessary for us to run an effective compensation program.

We are asking the Office of Management and Budget (OMB) to approve, for an additional 3 years, our use of these information collections in connection with our regulations.

The purpose of this notice is to solicit comments from the public (as well as affected agencies) concerning this information collection activity. We need this outside input to help us:

(1) Evaluate whether the information collection is necessary for the proper performance of our Agency's functions, including whether the information will have practical utility;

(2) Evaluate the accuracy of our estimate of the burden of the information collection, including the validity of the methodology and assumptions used;

(3) Enhance the quality, utility, and clarity of the information to be collected; and

(4) Minimize the burden of the information collection on those who are to respond (such as, through the use of appropriate automated, electronic, mechanical, or other technological collection techniques or other forms of information technology, *e.g.,* permitting electronic submission of responses).

Estimate of burden: The public reporting burden for this collection of information is estimated to average .1818 hours per response.

Respondents: Wheat growers, handlers, owners of grain storage facilities, flour millers, seed companies, and Farm Service Administration personnel.

Estimated annual number of respondents: 1,261.

Estimated annual number of responses per respondent: 9.26407.

Estimated annual number of responses: 11,682.

Estimated total annual burden on respondents: 2,124 hours. (Due to rounding, the total annual burden hours may not equal the product of the annual number of responses multiplied by the average reporting burden per response.)

All responses to this notice will be summarized and included in the request for OMB approval. All comments will also become a matter of public record.

Done in Washington, DC, this 16th day of March 2000.

Bobby R. Acord,

Acting Administrator, Animal and Plant Health Inspection Service.

[FR Doc. 00–7015 Filed 3–21–00; 8:45 am]

BILLING CODE 3410–34–P

DEPARTMENT OF AGRICULTURE

Commodity Credit Corporation

Notice of Request for Extension and Revision of a Currently Approved Information Collection

AGENCY: Commodity Credit Corporation, USDA.

ACTION: Notice and request for comments.

SUMMARY: In accordance with the Paperwork Reduction Act of 1995, this notice announces the Commodity Credit Corporation's (CCC) intention to request an extension for and revision to currently approved information collections in support of the CCC's Export Enhancement Program (EEP) and the CCC's Dairy Export Incentive Program (DEIP) based on re-estimates.

DATES: Comments on this notice must be received by May 22, 2000, to be assured of consideration.

ADDITIONAL INFORMATION OR COMMENTS: Contact Merle Brown, Director, Program Administration Division, Foreign Agricultural Service, U.S. Department of Agriculture, AgBox 1031, Washington, DC 20250–1031, telephone (202) 720–3573. Persons with disabilities who require an alternative means for communication of information (Braille, large print, audiotape, etc.) should contact USDA's Target Center at (202) 720–2600 (voice and TDD).

SUPPLEMENTARY INFORMATION: *Title:* CCC's Export Enhancement Program (EEP) and CCC's Dairy Export Incentive Program (DEIP).

OMB Numbers: 0551–0028 (EEP) and 0551–0029 (DEIP). These will be combined into OMB Number 0551–0028 if this request is approved.

Expiration Date of Approval: July 31, 2000.

Type of Request: Extension and revision of currently approved information collections, with change to combine 0551–0028 (CCC's Export Enhancement Program) and 0551–0029 (CCC's Dairy Export Incentive Program).

Abstract: The major objective of the EEP and DEIP is to expand U.S. agricultural exports by paying cash to exporters as bonuses, allowing them to sell U.S. agricultural products in targeted countries at competitive prices. Currently, 120 countries and 3 country regions are targeted export destinations and 820 exporters are eligible to participate under either or both programs. Under 7 CFR part 1494, exporters are required to submit the following: (1) information required for program participation (section 1494.301), (2) performance security (section 1494.401), (3) export sales information in connection with applying for a CCC bonus (section 1494.501), and (4) evidence of export and related information (section 1494.701). In addition, each exporter must maintain accurate records showing sales and deliveries of the eligible commodity exported in connection with an agreement made under the EEP or DEIP as outlined in section 1494.1001. The information collected is used by CCC to manage, plan for, evaluate the use of, and account for Government resources. The reports and records are required to ensure the proper and judicious use of public funds.

Estimate of Burden: The public reporting burden for these collections is estimated to average 0.45 hours per response.

Respondents: Exporters of U.S. agricultural commodities, banks or other financial institutions, producer associations, export trade associations, and U.S. Government agencies.

Estimated Number of Respondents: 40 per annum.

Estimated Number of Responses per Respondent: 90 per annum.

Estimated Total Annual Burden of Respondents: 1,636 hours.

Copies of this information collection can be obtained from Kimberly Chisley, the Agency Information Collection Coordinator, at (202) 720–2568.

Requests for Comments

Send comments regarding (a) whether the proposed collection of information is necessary for the proper performance of the functions of the agency, including whether the information will have practical utility; (b) the accuracy of the agency's estimate of the burden of the proposed collection of information; (c) ways to enhance the quality, utility and clarity of the information to be collected; and (d) ways to minimize the burden of the collection of information on those who are to respond, including through the use of automated, electronic, mechanical, or other technological collection techniques or other forms of information technology. Comments may be sent to Merle Brown, Director, Program Administration Division, Foreign Agricultural Service, U.S. Department of Agriculture, AgBox 1031, Washington, DC 20250–1031, or to the Desk Officer for Agriculture, Office of Information and Regulatory Affairs, Office of Management and Budget, Washington, DC 20503.

All responses to this notice will be summarized and included in the request for OMB approval.

All comments will also become a matter of public record.

Signed at Washington, D.C. on March 16, 2000.

Richard Fritz,

General Sales Manager, Foreign Agricultural Service, and Vice President, Commodity Credit Corporation.

[FR Doc. 00–7038 Filed 3–21–00; 8:45 am]

BILLING CODE 3410–10–P

DEPARTMENT OF AGRICULTURE

Farm Service Agency

Notice of Request for Revision and Extension of Currently Approved Information Collection

AGENCY: Farm Service Agency, USDA.

ACTION: Notice and request for comments.

SUMMARY: In accordance with the Paperwork Reduction Act of 1995, this

notice announces the intent of the Farm Service Agency (FSA) to request revision and extension of currently approved information collections used in support of FSA's Farm Loan Programs (FLP). The renewal includes revisions to information collections resulting from the new Low-Documentation Direct Operating Loan application process which will be published under a separate **Federal Register** publication titled, ''Implementation of Lo-Documentation Direct Operating Loan (Lo-Doc) Regulations.'' Lo-Doc makes the Direct Operating Loan program application process more consistent with the guaranteed loan program and standard industry practices. Loan processing will be more efficient and less time consuming.

DATES: Comments on this notice must be received on or before May 22, 2000 to be assured consideration.

FOR FURTHER INFORMATION CONTACT: Cathy Quayle, Senior Loan Officer, USDA, Farm Service Agency, Loan Making Division, 1400 Independence Avenue, SW, STOP 0522, Washington, D.C. 20250–0522; Telephone (202) 690–4018; Electronic mail: cquayle@wdc.fsa.usda.gov.

SUPPLEMENTARY INFORMATION: *Title:* Receiving and Processing Applications.

OMB Control Number: 0560–0178.

Expiration Date of Approval: April 30, 2000.

Type of Request: Revision and Extension of Currently Approved Information Collection.

Abstract: The information collected under OMB Control Number 0560–0178 is used in processing applications for direct FLP loans. Specifically, the Agency uses the information in making eligibility and financial feasibility determinations for direct operating, farm ownership, and emergency loans, as authorized under the Consolidated Farm and Rural Development Act. The specific information collected is business and entity supporting documentation on organizational structure and financial information, documentation of farm experience and training, verification that the applicant is unable to obtain credit elsewhere, historical financial and production records, and copies of any lease agreements or legal descriptions of real estate they own. Regulations are being revised under a separate **Federal Register** publication to implement a Lo-Doc application process which will decrease collections required from applicants requesting operating loans of $50,000 or less, or recurring annual operating loans. Lo-Doc will decrease the burden on both FSA employees and customers. Specifically, for Lo-Doc application processing only the entity supporting documentation information from this collection may be required.

Estimate of Burden: Public reporting burden for this collection of information is estimated to average 4.2 hours per response.

Respondents: Individuals or households, businesses or others for profit, and farms.

Estimated Number of Respondents: 34,970.

Estimated Number of Responses per Respondent: 5.03.

Estimated Total Annual Burden on Respondents: 147,551.

Comments are sought on these requirements including: (a) whether the collection of information is necessary for the proper performance of the functions of the agency, including whether the information will have practical utility, (b) the accuracy of the agency's estimate of burden including the validity of the methodology and assumptions used; (c) ways to enhance the quality, utility and clarity of the information to be collected; (d) ways to minimize the burden of the collection of information on those who are to respond, including through the use of appropriate automated, electronic, mechanical, or other technological collections techniques or other forms of information technology.

These comments should be sent to the Desk Officer for Agriculture, Office of Information and Regulatory Affairs, Office of Management and Budget, Washington, D.C. 20503 and to Cathy Quayle, USDA, FSA, Farm Loan Programs, Loan Making Division, 1400 Independence Avenue, SW, STOP 0522, Washington D.C. 20250–0522. Copies of the information collection may be obtained from Cathy Quayle at the above address.

Comments regarding paperwork burden will be summarized and included in the request for OMB approval of the information collection. All comments will also become a matter of public record.

Signed in Washington, D.C., on March 13, 2000.

Keith Kelly,

Administrator, Farm Service Agency.

[FR Doc. 00–7037 Filed 3–21–00; 8:45 am]

BILLING CODE 3410–05–P

DEPARTMENT OF AGRICULTURE

Forest Service

East Side Project, McKean, Elk and Forest Counties, PA

AGENCY: Forest Service, USDA.

ACTION: Revised notice of intent to prepare an environmental impact statement.

SUMMARY: Reference is made to our notice of intent to prepare an environmental impact statement for the East Side Project (FR Document 98–10895 filed 4/23/98) published in the **Federal Register**, Volume 63, No. 79, Friday, April 24, 1998, pages 20368–69.

In accordance with Forest Service Environmental Policy and Procedures handbook 1909.15, part 21.2—*Revision of Notices of Intent*, we are revising the date that the Draft Environmental Impact Statement is expected to be filed with the Environmental Protection Agency and be available for public review and comment to April 10, 2000. Subsequently, the date the final EIS is scheduled to be completed is revised to be August 1, 2000.

FOR FURTHER INFORMATION CONTACT: Gary W. Kell, Allegheny National Forest at P.O. Box 847, Warren, PA 16365 or by telephone at 814/723–5150.

Dated: March 14, 2000.

John E. Palmer,

Forest Supervisor.

[FR Doc. 00–7018 Filed 3–21–00; 8:45 am]

BILLING CODE 3410–11–M

DEPARTMENT OF AGRICULTURE

Forest Service

Hidden Cedar Project, ID; Panhandle National Forests, Shoshone County, ID

AGENCY: Forest Service, USDA.

ACTION: Notice of intent to prepare an environmental impact statement.

SUMMARY: The St. Joe Ranger District of the Idaho Panhandle National Forest is considering vegetation, watershed restoration, and access management activities in the Hidden Cedar Project. The project area is located approximately 26 miles south of the town of St. Maries on the St. Maries River.

The proposed action was designed to meet the primary objectives listed below. The interdisciplinary team reviewed the Natural Resource Agenda, the Interior Columbia Basin Ecosystem Management Project, the Idaho Panhandle Forest Plan, and the St. Joe

Geographic Assessment. Using these documents and information specific to the project area, the interdisciplinary team completed an Ecosystem Analysis at the Watershed Scale for the Hidden Cedar Project Area (located in the project file) to document resource conditions and note where activities were needed to improve them. The following needs for the Hidden Cedar area were derived from the Ecosystem Analysis: (1) Improve soil conditions; (2) Reduce sedimentation from past activities, which have caused streambank instability, channel erosion and increased sedimentation; (3) Provide or improve wildlife security; (4) Reduce the impacts of existing roads such as influences on hydrologic properties, fish migration barriers (culverts), while providing adequate and appropriate access for management, recreation and adjacent landowners; (5) Move vegetation toward historical conditions in terms of species composition and size where feasible and acceptable to other resources, and (5) Reduce fuel build-up where it poses a risk to human uses in the project area.

DATE: Comments should be postmarked by April 15, 2000. Please include your name and address and the name of the project on which you are commenting.

ADDRESSES: For your comments to be most useful, they should be as specific as possible to the project area and the Proposed Action.

Submit written comments and suggestions on the proposed management activities or request to be places on project mailing list to: George M. Bain, District Ranger, St. Joe Ranger District, PO Box 407, St. Maries, ID 83861. Forest Supervisor, Idaho Panhandle National Forests, 3815 Schreiber Way, Coeur d'Alene, ID 83814 is the Responsible Official.

FOR FURTHER INFORMATION CONTACT: Cameo Flood, Project Team Leader, St. Joe Ranger District, (208) 245–4517.

Comments received in response to this solicitation, including names and addresses of those who comment, will be considered part of the public record on this proposed action and will be available for public inspection. Comments submitted anonymously will be accepted and considered; however, those who submit anonymous comments will not have standing to appeal the subsequent decision under 36 CFR Parts 215 or 217. Additionally, pursuant to 7 CFR 1.27(d), any person may request the agency to withhold a submission from the public record by showing how the Freedom of Information Act (FOIA) permits such confidentiality. Persons requesting such confidentiality may be granted in only very limited circumstances, such as to protect trade secrets. The Forest Service will inform the requester of the agency's decision regarding the request for confidentiality, and where the request is denied, the agency will return the submission and notify the requester that the comments may be resubmitted with or without name and address within 10 days.

SUPPLEMENTARY INFORMATION: Vegetation management under this proposal is designed to meet several needs, including providing timber products to local markets, protecting and enhancing wildlife habitat needs, providing for long term growth and yield as directed in the Idaho Panhandle National Forest Plan, increasing fire resiliency, reducing fire hazards, and moving the vegetation to the conditions the area historically had in terms of tree species composition and density.

Treatments include approximately 1768 acres of commercial timber harvesting including commercial thinning, shelterwood preparation and seed cuttings, group shelterwoods, irregular group shelterwoods, and clearcuts with reserves.

Stream Channel and Fish Habitat Restoration

The NEPA analysis will consider possible riparian road relocation and/or obliteration in the proposed action or alternatives. Segments of Roads 498 (Hidden Creek), 341 (Wood Creek) and 3340 (Mazie Creek) have been identified for possible relocation or obliteration that could be included in the analysis. An unnamed drainage north of the Clarkia Work Center also contains several riparian and/or other primitive roads that could be put into long term storage or obliterated. Other unclassified roads throughout the project area will be evaluated if they should be placed on the Forest Development Road (FDR) system or if additional treatment is needed such as decompaction, revegetation, culvert removal or some degree of recontouring.

As a minimum, for the proposed action, the following Forest Development Roads will be managed as unrestricted routes, available for all motorized vehicle use: East Elk Road 1451 (Staples Creek), from SH3 to Road 1491; Christmas Creek Road 3321, from County Road to the end of road; Anthony Peak Road 1486, from the County Road to Road 3685; Bluebell Road 3685, from Road 1486 to the ''four way saddle;'' Cats Spur Road 361, from Road 1486 to Road 1450; Log Creek Road 1450, from Road 361 to Road 1480; Keeler Connection Road 764, from SH3 to Read 765A; County Line Road 765A, from Road 765 to SH3; Hidden Creek Road 498, from Road 765 to the ''forks of Hidden Cr''; Wood Creek Road 341, from SH3 to Road 3340; Clarkia Emerald Creek Road 504, from SH3 to Road 447; Bechtel Mountain Road 3478, from Road 504 to the top of Bechtel Mountain; Anthony Peak Road 1486, segment I, from the County Road to Road 3685; Anthony Peak Road 1486, segment III, from Road 3685 to Road 3686; Bluebell Road 3685, from Road 1486 to Road 3685C; and Bobcat Road 3554, from Road 1450 to Road 3554A.

These roads are in addition to the general public access provided by State Highway 3 and other landowners in the area.

Access Management

Approximately 9.7 miles of road construction would be needed to access timber harvesting units.

Adjacent landowners (Potlatch Corporation and the Idaho Department of Lands) have indicated that in the near future, they will be requesting access across National Forest System Lands in the project area to reach their lands. The federal government is required to allow reasonable access the adjacent lands after the appropriate analysis and consultation. The amount of additional road access (new road construction) associated with these access requests is estimated at between two and five miles.

Preliminary Issues

We expect issues and concerns with this project to include the impacts on wildlife, fish, water quality, and recreation, as well as road construction, clearcutting and economic feasibility. Issues will be developed and analyzed based on public comment and the interdisciplinary team's analysis of effects on resources. Alternatives will be developed to modify or eliminate the impacts from proposed activities and still meet the purpose for this project.

Additionally, some of the vegetation treatment may result in opening of over 60 acres, which requires a 60 day comment period. While we would like comments that would affect alternatives early, comments on the size of openings and their effects should be received by May 15, 2000.

The draft environmental impact statement is expected to be filed with the Environmental Protection Agency (EPA) and available for public review in September 2000. The final environmental impact statement is expected to be completed in February 2001.

The comment period on the draft environmental impact statement will be 45 days from the date the Environmental Protection Agency publishes the notice of availability in the **Federal Register**,

The Forest Service believes, at this early stage, it is important to give reviewers notice of several court rulings related to public participation in the environmental review process. First, reviewers of draft environmental impact statements must structure their participation in the environmental review of the proposal so that it is meaningful and alerts an agency to the reviewer's position and contentions. *Vermont Yankee Nuclear Power Corp.* v. *NRDC*, 435 U.S. 519, 553 (1978). Also, environmental objections that could be raised at the draft environmental statement stage but that are not raised until after completion of the final environmental statement may be waived or dismissed by the courts. *City of Angoon* v. *Hodel*, 803 F 2d 1016, 1022 (9th Cir. 1986) and *Wisconsin Heritages, Inc.* v. *Harris*, 490 F. Supp. 1334, 1338 (E.D. Wis. 1980). Because of these court rulings, it is very important that those interested in this proposed action participate by the close of the 45-day comment period so that substantive comments and objections are made available to the Forest Service at a time when it can meaningfully consider them and respond to them in the final environmental impact statement.

To assist the Forest Service in identifying and considering issues and concern on the proposed action, comments on the draft environmental impact statement should be as specific as possible. It also helpful if comments refer to specific pages of chapters of the draft statement. Comments may also address the adequacy of the draft environmental impact statement or the merits of the alternatives formulated and discussed in the statement. Reviews may wish to refer to the Council on Environmental Quality Regulations for implementing the procedural provisions of the National Environmental Policy Act at 40 CFR 1503.3 in addressing these points.

The United States Department of Agriculture (USDA) prohibits discrimination in its programs on the basis of race, color, national origin, sex, religion, age, disability, political beliefs, and marital or familial status. (Not all prohibited bases apply to all programs.) Persons with disabilities who require alternative means of communication of program information (braille, large print, audiotape, etc.) should contact USDA's TARGET Center ad (202) 720–2600 (voice and TDD).

To file a complaint, write the Secretary of Agriculture, U.S. Department of Agriculture, Washington, DC 20250, or call 1–800–245–6340 (voice) or 202–720–1127 (TDD). USDA is an equal employment opportunity employer.

Dated: March 6, 2000.

George Bain,

St. Joe District Ranger.

[FR Doc. 00–7017 Filed 3–21–00; 8:45 am]

BILLING CODE 3410–11–M

DEPARTMENT OF AGRICULTURE

Forest Service

Categorical Exclusion for Certain Ski Area Permit Actions

AGENCY: Forest Service, USDA.

ACTION: Notice of availability; reissuance of interim directive.

SUMMARY: The Forest Service is reissuing an interim directive to guide its employees in complying with the National Environmental Policy Act when issuance of a ski area permit is a purely ministerial action and no changes are proposed in permitted activities or facilities. The interim directive implements a provision of the Omnibus Parks and Public Lands Management Act of 1996, which states that reissuance of a ski area permit for activities similar in nature and amount to the activities authorized under the previous permit shall not constitute a major Federal action. This interim directive, numbered ID 1909.15–2000–1, reissues without change the interim direction previously issued to Forest Service Handbook 1909.15, Environmental Policy and Procedures Handbook, in ID 1909.15–98–1, which was published in the **Federal Register** on September 9, 1998, and was issued effective September 24, 1998. The proposed interim directive was previously published for notice and comment in the **Federal Register** on October 27, 1997 (62 FR 55571).

DATES: Interim directive (ID) 1909.15–2000–1 is effective March 24, 2000, and expires September 24, 2001, unless the direction in the ID is incorporated in an amendment to Forest Service Handbook 1909.15 before the expiration date.

ADDRESSES: Copies of interim directive 1909.15–2000–1 are available electronically from the Forest Service via the World Wide Web/Internet at http://www.fs.fed.us/im/directives/fsh/1909.15/id__1909.15__2000__1.txt or by contacting the Forest Service, USDA, Recreation, Heritage, and Wilderness Resources Management Staff (Mail Stop 1125), P. O. Box 96090, Washington, DC 20090–6090 (telephone 202–205–1706).

FOR FURTHER INFORMATION CONTACT: Ken Karkula, Recreation, Heritage, and Wilderness Resources Management Staff (202-205–1426).

Dated: March 16, 2000.

Paul Brouha,

Acting Deputy Chief for National Forest System.

[FR Doc. 00–7041 Filed 3–21–00; 8:45 am]

BILLING CODE 3410–11–P

DEPARTMENT OF AGRICULTURE

Rural Business—Cooperative Service

Notice of Request for Extension of a Currently Approved Information Collection

AGENCY: Rural Business—Cooperative Service, USDA.

ACTION: Proposed collection; comments requested.

SUMMARY: In accordance with the Paperwork Reduction Act of 1995, this notice announces the Rural Business—Cooperative Service's intention to request an extension for a currently approved information collection in support of the program for 7 CFR Part 1942–G Rural Business Enterprise Grants and Television Demonstration Grants.

DATES: Comments on this notice must be received by May 22, 2000 to be assured of consideration.

FOR FURTHER INFORMATION CONTACT: Carole Boyko, Rural Development Loan Specialist, Rural Business—Cooperative Service, USDA, Specialty Lenders Division, Stop 3325, 1400 Independence Avenue SW, Washington, DC 20250–3325. Telephone: (202) 720–0661.

SUPPLEMENTARY INFORMATION:

Title: RBS/Rural Business Enterprise Grants and Television Demonstration Grants.

OMB Number: 0570–0132.

Expiration Date of Approval: May 31, 2000.

Type of Request: Extension of a currently approved information collection.

Abstract: The objective of the RBEG program is to facilitate the development of small and emerging private businesses in rural areas. This purpose is achieved through grants made by RBS to public bodies and nonprofit corporations. Television Demonstration grants are available to private nonprofit public television systems to provide information on agriculture and other issues of importance to farmers and the

rural residents. The regulations contain various requirements for information from the grantees, and some requirements may cause the grantees to require information from other parties. The information requested is vital for RBS to be able to process applications in a responsible manner, make prudent program decisions, and effectively monitor the grantees' activities to protect the Government's financial interest and ensure that funds obtained from the Government are used appropriately. It includes information used to determine eligibility; the specific purposes for which grant funds will be used; timeframes; who will be carrying out the grant purposes; project priority; applicant experience; employment improvement; and mitigation of economic distress.

Estimate of Burden: Public reporting burden for this collection of information is estimated to average 1.95 hours per response.

Respondents: Non-profit corporations, public bodies.

Estimated Number of Respondents: 720.

Estimated Number of Responses per Respondent: 28.94.

Estimated Total Annual Burden on Respondents: 40,650 hours.

Copies of this information collection can be obtained from Jean Mosley, Regulations and Paperwork Management Branch at (202) 692–0041.

Comments

Comments are invited on: (a) Whether the proposed collection of information is necessary for the proper performance of the functions of Rural Business—Cooperative Service, including whether the information will have practical utility; (b) the accuracy of Rural Business—Cooperative Service estimate of the burden of the proposed collection of information including the validity of the methodology and assumptions used; (c) ways to enhance the quality, utility and clarity of the information to be collected; and (d) ways to minimize the burden of the collection of information on those who are to respond, including through the use of appropriate automated, electronic, mechanical, or other technological collection techniques or other forms of information technology. Comments may be sent to Jean Mosley, Regulations and Paperwork Management Branch, U.S. Department of Agriculture, Rural Development, STOP 0742, 1400 Independence Ave. SW, Washington, DC 20250. All responses to this notice will be summarized and included in the request for OMB approval. All comments will also become a matter of public record.

Dated: March 14, 2000.

Dayton J. Watkins,

Administrator, Rural Business—Cooperative Service.

[FR Doc. 00–7035 Filed 3–21–00; 8:45 am]

BILLING CODE 3410–XY–P

DEPARTMENT OF AGRICULTURE

Rural Utilities Service

Information Collection Activity; Comment Request

AGENCY: Rural Utilities Service, USDA.

ACTION: Notice and request for comments.

SUMMARY: In accordance with the Paperwork Reduction Act of 1995 (44 U.S.C. Chapter 35, as amended), the Rural Utilities Service (RUS) invites comments on this information collection for which RUS intends to request approval from the Office of Management and Budget (OMB).

DATES: Comments on this notice must be received by May 22, 2000.

FOR FURTHER INFORMATION CONTACT: F. Lamont Heppe, Jr., Program Development & Regulatory Analysis, Rural Utilities Service, USDA, 1400 Independence Ave., SW., STOP 1522, Room 4034 South Building, Washington, DC 20250–1522. Telephone: (202) 720–0736. FAX: (202) 720–4120.

SUPPLEMENTARY INFORMATION:

Title: State Telecommunications Modernization Plan.

OMB Control Number: 0572–0104.

Type of Request: Reinstatement of a previously approved collection with change.

Abstract: This information collection requirement stems from passage of the Rural Electrification Loan Restructuring Act (RELRA, P.L. 103–129) on November 1, 1993, which amended the Rural Electrification Act of 1936, 7 U.S.C. 901 *et seq.* (the RE Act). RELRA requires that a State Telecommunications Modernization Plan (STMP), covering at a minimum the Rural Utilities Service (RUS) borrowers in the state, be established in a state or RUS cannot make hardship or concurrent cost-of-money and Rural Telephone Bank (RTB) loans for construction in that state. It is the policy of RUS that every State have a Modernization Plan which provides for the improvement of the State's telecommunications network. A proposed Modernization Plan must be submitted to RUS for approval. RUS will approve a proposed Modernization Plan if it conforms to the provisions of 7 CFR part 1751, subpart B.

Estimate of Burden: Public reporting burden for this collection of information is estimated to average 350 hours per response.

Respondents: Not-for-profit institutions and other businesses.

Estimated Number of Respondents: 1.

Estimated Number of Responses per Respondent: 1.

Estimate Total Annual Burden on Respondents: 350 hours.

Copies of this information collection can be obtained from Bob Turner, Program Development and Regulatory Analysis, Rural Utilities Service at (202) 720–0696.

Comments are invited on (a) Whether the collection of information is necessary for the proper performance of the functions of the agency, including whether the information will have practical utility; (b) the accuracy of the agency's estimate of burden including the validity of the methodology and assumption used; (c) ways to enhance the quality, utility and clarity of the information to be collected; and (d) ways to minimize the burden of the collection of information on those who are to respond, including through the use of appropriate automated, electronic, mechanical, or other technological collection techniques on other forms of information technology. Comments may be sent to F. Lamont Heppe, Jr., Director, Program Development and Regulatory Analysis, Rural Utilities Service, U.S. Department of Agriculture, 1400 Independence Ave. SW, Stop 1522, Room 4034 South Building, Washington, DC 20250–1522.

All responses to this notice will be summarized and included in the request for OMB approval. All comments will also become a matter of public record.

Dated: March 14, 2000.

Christopher A. McLean,

Acting Administrator, Rural Utilities Service.

[FR Doc. 00–7087 Filed 3–21–00; 8:45 am]

BILLING CODE 3410–15–P

DEPARTMENT OF COMMERCE

Foreign-Trade Zones Board

[DOCKET 9–2000]

Foreign-Trade Zone 25—Broward County, FL; Application for Subzone Status, Coastal Fuels Marketing, Inc. (Fuel Terminal), Port Everglades, FL

An application has been submitted to the Foreign-Trade Zones Board (the

Board) by Broward County, Florida, grantee of FTZ 25, requesting special-purpose subzone status for the fuel distribution terminal of Coastal Fuel Marketing, Inc. (Coastal), located in Port Everglades, Florida. The application was submitted pursuant to the provisions of the Foreign-Trade Zones Act, as amended (19 U.S.C. 81a–81u), and the regulations of the Board (15 CFR part 400). It was formally filed on March 15, 2000.

The Coastal facilities (56.5 acres) are located at 2401 Eisenhower Boulevard, Port Everglades, Florida. The terminal facilities (72 employees), are used for the receipt, storage, blending and distribution of jet fuel, gasoline, crude oil, asphalt, distillates, residual fuels and motor fuel blending stocks for the domestic and foreign markets. Some of the products will be sourced from abroad, or from U.S. refineries under FTZ procedures.

Zone procedures would exempt Coastal from Customs duties and federal excise taxes on exports and on foreign status jet fuel used for international flights. On domestic sales, the company would be able to defer Customs duty payments until the products leave the facility. The application indicates that the savings from FTZ procedures will help improve the facility's international competitiveness.

No specific manufacturing request is being made at this time. Such a request would be made to the Board on a case-by-case basis.

In accordance with the Board's regulations, a member of the FTZ Staff has been designated examiner to investigate the application and report to the Board.

Public comment is invited from interested parties. Submissions (original and 3 copies) shall be addressed to the Board's Executive Secretary at the address below. The closing period for their receipt is May 22, 2000. Rebuttal comments in response to material submitted during the foregoing period may be submitted during the subsequent 15-day period to June 5, 2000.

A copy of the application and accompanying exhibits will be available for public inspection at each of the following locations:

U.S. Department of Commerce, Export Assistance Center, 200 E. las Olas Blvd. (Sun Sentinel Building), Suite 1600, Ft. Lauderdale, Florida 33301–2284

Office of the Executive Secretary, Foreign-Trade Zones Board, Room 4008, U.S. Department of Commerce, 14th & Pennsylvania Avenue, NW, Washington, DC 20230

Dated: March 16, 2000.

Dennis Puccinelli,

Acting Executive Secretary.

[FR Doc. 00–7093 Filed 3–21–00; 8:45 am]

BILLING CODE 3510–DS–P

DEPARTMENT OF COMMERCE

Foreign-Trade Zones Board

[Docket 10–2000]

Foreign-Trade Zone 86—Tacoma, WA; Application for Subzone, Tesoro Petroleum Corporation, Anacortes, WA

An application has been submitted to the Foreign-Trade Zones Board (the Board) by the Port of Tacoma, grantee of FTZ 86, requesting special-purpose subzone status for the oil refinery complex of Tesoro Petroleum Corporation, located in Anacortes, Washington. The application was submitted pursuant to the provisions of the Foreign-Trade Zones Act, as amended (19 U.S.C. 81a–81u), and the regulations of the Board (15 CFR part 400). It was formally filed on March 15, 2000.

The refinery complex (903 acres, 300 employees) is located on West March Point Road in Anacortes, Washington (Skagit County), some 100 miles north of Tacoma. The refinery (108,200 BPD) is used to produce fuels and liquid petroleum gases, including gasoline, jet fuel, distillates, residual fuels, naphthas, motor fuel blendstocks, liquefied natural gas, butane, isobutane, and propane. Refinery by-products include petroleum coke, asphalt and sulfur. Some 68 percent of the crude oil (96 percent of inputs), and some naphthas, virgin gas oil and field butanes are sourced abroad. Zone procedures would exempt the refinery from Customs duty payments on the foreign products used in its exports. On domestic sales, the company would be able to choose the Customs duty rates that apply to certain petrochemical feedstocks and refinery by-products (duty-free) by admitting incoming foreign crude oil in non-privileged foreign status. The duty rates on inputs range from 5.25 cents/barrel to 10.5 cents/barrel. The application indicates that the savings from zone procedures would help improve the refinery's international competitiveness.

In accordance with the Board's regulations, a member of the FTZ Staff has been designated examiner to investigate the application and report to the Board.

Public comment is invited from interested parties. Submissions (original and 3 copies) shall be addressed to the Board's Executive Secretary at the address below. The closing period for their receipt is May 22, 2000. Rebuttal comments in response to material submitted during the foregoing period may be submitted during the subsequent 15-day period to June 5, 2000.

A copy of the application and the accompanying exhibits will be available for public inspection at each of the following locations:

U.S. Department of Commerce, Export Assistance Center, 2001 Sixth Ave., Suite 650, Seattle, WA 98121

Office of the Executive Secretary, Foreign-Trade Zones Board, Room 4008, U.S. Department of Commerce, 14th and Pennsylvania Avenue, N.W., Washington, D.C. 20230

Dated: March 16, 2000.

Dennis Puccinelli,

Acting Executive Secretary.

[FR Doc. 00–7094 Filed 3–21–00; 8:45 am]

BILLING CODE 3510–DS–P

DEPARTMENT OF COMMERCE

International Trade Administration

[A–588–835]

Oil Country Tubular Goods From Japan; Final Results of Antidumping Duty Administrative Review

AGENCY: Import Administration, International Trade Administration, Department of Commerce.

ACTION: Notice of final results of antidumping duty administrative review.

SUMMARY: On September 7, 1999, the Department of Commerce (the Department) published the preliminary results of administrative review of the antidumping duty order on oil country tubular goods (OCTG) from Japan (64 FR 48589). The merchandise covered by this order is hollow steel products of circular cross-section, including oil well casing, tubing, and drill pipe, of iron (other than cast iron) or steel (both carbon and alloy), whether seamless or welded, whether or not conforming to American Petroleum Institute (API) or non-API specifications, whether finished or unfinished (including green tubes and limited service OCTG products). The review covers one manufacturer. The period of review is August 1, 1997 through July 31, 1998.

Based on our analysis of the comments received, we have made changes in the margin calculations. The final weighted-average dumping margin for the reviewed firm is listed below in the section entitled ''Final Results of the Review.''

EFFECTIVE DATE: March 22, 2000.

FOR FURTHER INFORMATION CONTACT: Thomas Gilgunn or Mark Hoadley, Import Administration, International Trade Administration, U.S. Department of Commerce, Washington, D.C. 20230; telephone: (202) 482–0648 and (202) 482–0666, respectively.

SUPPLEMENTARY INFORMATION:

The Applicable Statute

Unless otherwise indicated, all citations to the Tariff Act of 1930, as amended (the Act), are references to the provisions effective January 1, 1995, the effective date of the amendments made to the Act by the Uruguay Round Agreements Act. In addition, unless otherwise indicated, all citations to the Department's regulations are to 19 CFR Part 351 (1999).

Background

On September 7, 1999, the Department published the preliminary results of administrative review of the antidumping duty order on OCTG from Japan (64 FR 48589). We invited parties to comment on our preliminary results of review. The Department has conducted this administrative review in accordance with section 751 of the Act.

Scope of Review

The merchandise covered by this order consists of oil country tubular goods, hollow steel products of circular cross-section, including oil well casing, tubing, and drill pipe, of iron (other than cast iron) or steel (both carbon and alloy), whether seamless or welded, whether or not conforming to American Petroleum Institute (API) or non-API specifications, whether finished or unfinished (including green tubes and limited service OCTG products). This scope does not cover casing, tubing, or drill pipe containing 10.5 percent or more of chromium. The products subject to this order are currently classified in the Harmonized Tariff Schedule of the United States (HTSUS) under item numbers: 7304.21.30.00, 7304.21.60.30, 7304.21.60.45, 7304.21.60.60, 7304.29.10.10, 7304.29.10.20, 7304.29.10.30, 7304.29.10.40, 7304.29.10.50, 7304.29.10.60, 7304.29.10.80, 7304.29.20.10, 7304.29.20.20, 7304.29.20.30, 7304.29.20.40, 7304.29.20.50, 7304.29.20.60, 7304.29.20.80, 7304.29.30.10, 7304.29.30.20, 7304.29.30.30, 7304.29.30.40, 7304.29.30.50, 7304.29.30.60, 7304.29.30.80, 7304.29.40.10, 7304.29.40.20, 7304.29.40.30, 7304.29.40.40, 7304.29.40.50, 7304.29.40.60, 7304.29.40.80, 7304.29.50.15, 7304.29.50.30, 7304.29.50.45, 7304.29.50.60, 7304.29.50.75, 7304.29.60.15, 7304.29.60.30, 7304.29.60.45, 7304.29.60.60, 7304.29.60.75, 7305.20.20.00, 7305.20.40.00, 7305.20.60.00, 7305.20.80.00, 7306.20.10.30, 7306.20.10.90, 7306.20.20.00, 7306.20.30.00, 7306.20.40.00, 7306.20.60.10, 7306.20.60.50, 7306.20.80.10, and 7306.20.80.50. Although the HTSUS subheadings are provided for convenience and customs purposes, our written description of the scope of this review is dispositive.

Analysis of Comments Received

All issues raised in the case and rebuttal briefs by parties to this administrative review are addressed in the ''Issues and Decision Memorandum'' (Decision Memo) from Joseph A. Spetrini, Deputy Assistant Secretary, Import Administration, to Robert S. LaRussa, Assistant Secretary for Import Administration, dated March 6, 2000, which is hereby adopted and incorporated by reference into this notice. A list of the issues which parties have raised and to which we have responded, all of which are in the Decision Memo, is attached to this notice as an Appendix. Parties can find a complete discussion of all issues raised in this review and the corresponding recommendations in this public memorandum which is on file in the Central Records Unit, located in room B–099 of the main Department of Commerce Building. In addition, a complete version of the Decision Memo can be accessed directly on the Web at www.ita.doc.gov/import__admin/records/frn/. The paper copy and electronic version of the Decision Memorandum are identical in content.

Changes Since the Preliminary Results

Based on our analysis of comments received, we have made certain changes in the margin calculations. We have also corrected certain programming and clerical errors in our preliminary results, where applicable. Any alleged programming or clerical errors with which we do not agree are discussed in the relevant sections of the ''Decision Memorandum,'' accessible in B–099 and on the Web at www.ita.doc.gov/import__admin/records/frn/.

Final Results of Review

We determine that the following percentage weighted-average margins exist for the period August 1, 1997 through July 31, 1998:

Manufacturer/exporter	Margin (percent)
Sumitomo Metal Industries	0.00

Cash Deposit Requirements

The following deposit requirements will be effective upon publication of this notice of final results of administrative review for all shipments of oil country tubular goods from Japan entered, or withdrawn from warehouse, for consumption on or after the date of publication, as provided by section 751(a)(1) of the Act: (1) The cash deposit rates for the reviewed companies will be the rates shown above except that, for firms whose weighted-average margins are less than 0.5 percent and therefore *de minimis,* the Department shall require no deposit of estimated antidumping duties; (2) for previously reviewed or investigated companies not listed above, the cash deposit rate will continue to be the company-specific rate published for the most recent period; (3) if the exporter is not a firm covered in this review, a prior review, or the original less-than-fair-value (LTFV) investigation, but the manufacturer is, the cash deposit rate will be the rate established for the most recent period for the manufacturer of the merchandise; and (4) the cash deposit rate for all other manufacturers or exporters will continue to be 44.2 percent. This rate is the ''All Others'' rate from the LTFV investigation.

These deposit requirements shall remain in effect until publication of the final results of the next administrative review.

This notice also serves as a final reminder to importers of their responsibility under 19 CFR 351.402(f) to file a certificate regarding the reimbursement of antidumping duties prior to liquidation of the relevant entries during this review period. Failure to comply with this requirement could result in the Secretary's presumption that reimbursement of antidumping duties occurred and the subsequent assessment of doubled antidumping duties.

This notice also serves as a reminder to parties subject to administrative protective orders (APO) of their responsibility concerning the return or destruction of proprietary information disclosed under APO in accordance with 19 CFR 351.305. Timely written notification of the return/destruction of APO materials or conversion to judicial protective order is hereby requested. Failure to comply with the regulations and terms of an APO is a violation which is subject to sanction.

We are issuing and publishing this determination and notice in accordance with sections section 751(a)(1) and 777(i) of the Act.

Dated: March 6, 2000.

Robert S. LaRussa,

Assistant Secretary for Import Administration.

Appendix—List of Issues

1. Bona Fide Sale
2. Discounts and Rebates
3. Credit and Warranty Expenses
4. CEP Profit
5. Clerical Errors

[FR Doc. 00–7092 Filed 3–21–00; 8:45 am]

BILLING CODE 3510–DS–P

DEPARTMENT OF COMMERCE

National Oceanic and Atmospheric Administration

[Docket No. 000301055–0055–01; I.D. 012400A]

RIN: 0648–ZA81

Financial Assistance for Chesapeake Bay Stock Assessments to Encourage Research Projects for Improvement in the Stock Conditions of the Chesapeake Bay Fisheries

AGENCY: National Marine Fisheries Service (NMFS), National Oceanic and Atmospheric Administration (NOAA), Commerce.

ACTION: Notice of availability of funds.

SUMMARY: A total of up to $540,000 in Fiscal Year (FY) 2000 funds is available through the NOAA/NMFS Chesapeake Bay Office to assist interested state fishery agencies, academic institutions, and other nonprofit organizations relating to cooperative research units, in carrying out research projects to provide information for Chesapeake Bay Stock Assessments through cooperative agreements. About $285,000 of the base amount are available to initiate new projects in FY 2000, as described in this announcement. In addition, it is anticipated that supplemental FY 2000 funds, up to $500,000, will be provided to investigate multispecies management and research in Chesapeake Bay. NMFS issues this notice describing the conditions under which eligible applications will be accepted and how NMFS will determine which applications will be selected for funding.

DATES: Applications for funding under this program must be received by 5 p.m. eastern standard time on April 21, 2000. Applications received after that time will not be considered for funding. No applications will be accepted by facsimile machine submission.

Successful applicants generally will be selected approximately 90 days after the date of publication in the *Federal Register* of this notice. The earliest date for awards will be approximately 180 days after the date of publication in the *Federal Register* of this notice.

ADDRESSES: Send applications to: Derek Orner, National Marine Fisheries Service, NOAA Chesapeake Bay Office, 410 Severn Avenue, Suite 107A, Annapolis, MD 21403.

FOR FURTHER INFORMATION CONTACT: Derek Orner, 410/267–5660; or e-mail: derek.orner@noaa.gov.

SUPPLEMENTARY INFORMATION:

I. Introduction

A. *Authority*. The Fish and Wildlife Act of 1956, as amended, at 16 U.S.C. 753 (a), authorizes the Secretary of Commerce (Secretary), for the purpose of developing adequate, coordinated, cooperative research and training programs for fish and wildlife resources, to continue to enter into cooperative agreements with colleges and universities, with game and fish departments of the several states, and with non-profit organizations relating to cooperative research units. The Departments of Commerce (DOC), Justice, State, the Judiciary, and Related Agencies Appropriations Act of 2000 makes funds available to the Secretary.

B. *Catalog of Federal Assistance*. The research to be funded is in support of the Chesapeake Bay Studies (CFDA 11.457), under the Chesapeake Bay Stock Assessment Committee (CBSAC).

C. *Program Description*. CBSAC was established in 1985 to plan and review Bay-wide resource assessments, coordinate relevant actions of state and Federal agencies, report on fisheries status and trends, and determine, fund and review research projects. The program implements a Bay-wide plan for the assessment of commercially, recreationally, and selected ecologically important species in the Chesapeake Bay. In 1988, CBSAC developed a Bay-wide Stock Assessment Plan, in response to provisions in the Chesapeake Bay Agreement of 1987. The Plan identified that key obstacles to assessing Bay stocks was the lack of consistent, Bay-wide, fishery-dependent and fishery-independent data. Research projects funded since 1988 have focused on developing and improving fishery-independent surveys and catch statistics for key Bay species, such as striped bass, oysters, blue crabs and alosids. Stock assessment research is essential, given the recent declines in harvest and apparent stock condition for many of the important species of the Chesapeake Bay.

D. *Funding Availability*. (1) This solicitation announces that funding of up to $285,000 will be available for new initiatives in FY00 for research projects providing regional information required for stock assessments. (2) This solicitation also announces that funding of up to $500,000 is anticipated to be available for projects providing information on multispecies management or research in Chesapeake Bay.

II. Areas of Special Emphasis

A. Proposals should exhibit familiarity with related work that is completed or ongoing. Where appropriate, proposals should be multi-disciplinary. Coordinated efforts involving multiple eligible applicants or persons are encouraged. Eligible women and minority owned and operated non-profit organizations are encouraged to apply. (See Section III.A.)

(1) *Stock Assessment Research* - Consideration for funding will be given to applications that address the following stock assessment research and management priorities for the Chesapeake Bay. These priorities are not listed in any implied order:

(a) Conduct assessments of the abundance, productivity, and distribution of important Chesapeake Bay finfish and shellfish resources together with the patterns of their exploitation. Successful proposals may include research on life history characteristics, stock-recruitment relationships, and schedules of vital rates. Descriptions of stock structure, demographics and spatial distribution would also be appropriate. It is hoped that proposals would combine analyses of existing fishery-dependent and fishery-independent data. Proposals focusing on hard clams are particularly encouraged.

(b) Design of a method/survey to estimate the Baywide abundance of oysters in Chesapeake Bay. The purpose of this survey will be to track progress towards achieving the Chesapeake Bay Program goal of increasing the oyster population in Chesapeake Bay ten-fold by the year 2010. The investigators should take into consideration existing state surveys that already fill various data needs.

(c) Blue Crab Recreational Survey—A substantial blue crab recreational fishery exists in the Chesapeake Bay which has never been fully assessed. Recent work includes the development of methods for conducting a Baywide recreational

survey for the blue crab. Projects should:

(i) Review the work previously conducted and begin implementation on a Baywide scale based on earlier work;

(ii) Provide reliable estimates of recreational catch, fishing effort, catch rates, size composition, and sex ratios for all components of the blue crab recreational fisheries.

(d) Improvement or implementation of the collection of fishery-dependent data within Chesapeake Bay. Projects can involve either the commercial and/or recreational components of the fishery. Projects should focus on collecting biological data (size, sex, age, diet), and catch and effort data from Bay-wide harvests of significant finfish and shellfish fisheries to provide accurate, statistically representative information on the spatial and temporal characteristics of the harvest. Proposals may involve designs for port-sampling of landings, or on-board anaysis of the catch, analysis of intercepts and telephone surveys. Proposals that document information on by-catch would be relevant.

The proposals should recognize current efforts to collect biological data from Bay fisheries and attempt to define the optimal, regional (Maryland, Potomac River Fisheries Commission, and Virginia jurisdictions) sampling program. Proposals focusing on the blue crab commercial fishery are particularly encouraged.

(2) *Multispecies Management or Research* - The Chesapeake Bay is a complex and dynamic ecosystem that supports many fisheries that are economically important both regionally and nationally. To date, these resources have been managed on a single species basis. This single species approach has served us well; however, the existence of both biological and technical (by-catch) interactions in most of Chesapeake Bay fisheries point to the need to move toward a wider, multispecies perspective. This viewpoint was wholeheartedly endorsed at a workshop of regional, national and international scientists held to address the potential utility of multispecies approaches to fisheries management in the Chesapeake Bay (STAC Publication 98–002, *www.chesapeake.org*). The ultimate objective of this research and monitoring is to lead to the development of an ecosystem plan for Chesapeake Bay fisheries, within which the rational exploitation of individual species can be determined.

Consideration for funding will be given to applications that address the following multispecies management and research priorities for the Chesapeake Bay. It should be realized that certain priorities may require a larger funding commitment, although the priorities are not listed in any implied order:

(a) Fishery-independent Surveys. CBSAC seeks proposals to plan, develop and initiate coordinated Baywide surveys to regularly estimate species abundances, trends and biological characteristics (e.g., age/size structure, recruitments, growth and mortality rates, food habitats) for economically and ecologically important key species. Proposals within this task may:

(i) Review and assess existing fishery independent sampling programs conducted by regional agencies to evaluate their potential applicability to the Chesapeake Bay. This may include evaluation of the use of fixed and random sampling protocols, with or without stratification, and the sampling characteristics of different gear types.

(ii) Develop and initiate a Baywide, coordinated, fishery-independent survey that may include multiple gear, such as benthic and midwater trawling, and hydroacoustics to characterize the status and trends in the abundance, distribution and characteristics of key Chesapeake Bay finfish and shellfish.

(b) Retrospective Analyzes. CBSAC seeks proposals to document and quantify multispecies interactions among economically and ecologically important finfish and shellfish within the Chesapeake Bay. The proposed work should lead to the identification of the πstrong' interactions within the Chesapeake Bay fisheries system. Work may involve analysis of commercial and recreational catch and effort data, the analysis of the patterns of diets and energy flows within the fisheries system, or multivariate analyzes of abundance relationships within the fisheries system and their relationship to environmental and habitat characteristics.

(c) Multispecies Assessment. CBSAC seeks proposals to apply and assess alternative multispecies fisheries models to the Chesapeake Bay fisheries systems. Examples of possible approaches include multispecies biomass dynamic, multispecies yield per recruit, multispecies bioenergetics, and multispecies simulation models. Model approaches should seek to predict constraints and patterns in the fisheries production of the Chesapeake Bay system.

(d) Technical Interactions (By-catch). CBSAC seeks proposals to quantify and assess the importance of technical interactions, e.g., by-catch within the Chesapeake Bay fishery. Proposals should quantify the species involved, the distribution and magnitude of by-catch by species, gear, location and season.

(e) Design and develop an integrated, Baywide blue crab mark and recapture study that will provide information on growth, natural mortality, fishing mortality, size selectivity, catchability, reporting rates and the distribution of harvest among the fisheries. Results should also be informative with respect to the reproductive frequency of female crabs, and longevity. Recognizing the scope of this project, subcomponents that will help in contributing to the development of a Baywide framework for this project will be accepted.

(f) Improvement or implementation of the collection of fishery-dependent data within Chesapeake Bay. Projects can involve either the commercial and/or recreational components of the fishery. Baywide Projects should focus on collecting biological data (size, sex, age, diet), and catch and effort data from harvests of significant finfish and shellfish fisheries to provide accurate, statistically representative information on the spatial and temporal characteristics of the harvest. Proposals may involve designs for port-sampling of landings, or on-board anaysis of the catch, analysis of intercepts and telephone surveys. Proposals that document information on by-catch would be relevant.

The proposals should recognize current efforts to collect biological data from Bay fisheries and attempt to define the optimal, regional (Maryland, Potomac River Fisheries Commission, and Virginia jurisdictions) sampling program. Proposals focusing on the blue crab commercial fishery and its effect on the Chesapeake Bay ecosystem are encouraged.

B. Applications addressing the priorities should build upon, or take into account, any related past or current work.

III. How to Apply

A. *Eligible applicants*. Applications for cooperative agreements under the Chesapeake Bay Studies Program may be submitted, in accordance with the procedures set forth in this notice, by any state game and fish department, college or university, or other nonprofit organizations relating to cooperative research units. Other Federal agencies or institutions are not eligible to receive Federal assistance under this notice.

DOC/NOAA/NMFS employees, including full-time, part-time and intermittent personnel are not eligible to submit an application under this solicitation or aid in the preparation of an application, except to provide information on program goals, funding

priorities, application procedures, and completion of application forms. Since this is a competitive program, assistance will not be provided in conceptualizing, developing, or structuring proposals.

Eligible applicants outside the Chesapeake Bay region may submit proposals, as long as their objectives support the technical and management priorities of the Chesapeake Bay, as defined in section II.A. All solicited proposals received by the closing date will be considered by NMFS.

Pursuant to Executive Orders 12876, 12900, and 13021, the Department of Commerce National Oceanic and Atmospheric Administration (DOC/NOAA) is strongly committed to broadening the participation of Historically Black Colleges and Universities, Hispanic Serving Institutions, and Tribal Colleges and Universities in its educational and research programs. The DOC/NOAA vision, mission, and goals are to achieve full participation by Minority Serving Institutions (MSI) in order to advance the development of human potential, to strengthen the nation's capacity to provide high-quality education, and to increase opportunities for MSIs to participate in and benefit from Federal financial assistance programs. DOC/NOAA encourages all applicants to include meaningful participation of MSIs.

B. *Duration and terms of funding*. Under this solicitation, NMFS will fund Chesapeake Bay Stock Assessment Research Projects for 1-year cooperative agreements. The cooperative agreement has been determined as the appropriate funding instrument because of the substantial involvement of NMFS in:

1. Developing program research priorities;
2. Evaluating the performance of the program for effectiveness in meeting regional goals for Chesapeake Bay stock assessments;
3. Monitoring the progress of each funded project;
4. Holding periodic workshops with investigators; and
5. Working with recipients in preparation of annual reports summarizing current accomplishments of the Chesapeake Bay Stock Assessment Committee. Project dates should be scheduled to begin no later than 1 October 2000. Cooperative agreements are approved on an annual basis but may be considered eligible for continuation beyond the first project and budget period subject to the approved scope of work, satisfactory progress, and availability of funds at the total discretion of NMFS. However, there are no assurances for such continuation. Publication of this notice does not obligate NMFS to award any specific cooperative agreement or to obligate any part of the entire amount of funds available.

C. *Cost-Sharing requirements*. Applications must reflect the total budget necessary to accomplish the project, including contributions and/or donations. Cost sharing is not required under the Chesapeake Bay Stock Assessment Research Program. However, cost sharing is encouraged to enhance the value of a project, and in case of a tie in considering proposals for funding, cost-sharing may affect the final decision. The appropriateness of all cost-sharing will be determined on the basis of guidance provided in applicable Federal cost principles. If an applicant chooses to share cost, and if that application is selected for funding, the applicants will be bound by the percentage of cost sharing reflected in the award documents.

The non-Federal share may include funds received from private sources or from state or local governments or the value of in-kind contributions. Federal funds may not be used to meet the non-Federal share of matching funds, except as provided by Federal statute. In-kind contributions may be in the form of, but are not limited to, personal services rendered in carrying out functions related to the project, and permission to use real or personal property owned by others (for which consideration is not required) in carrying out the project. To support the budget, the applicant must describe briefly the basis for estimating the value of the non-Federal funds derived from in-kind contributions.

The total cost of a project begins on the effective date of a cooperative agreement between the applicant and an authorized representative of the U.S. Government and ends on the date specified in the award. Accordingly, the time expended and costs incurred in either the development of a project or the financial assistance application, or in any subsequent discussions or negotiations prior to the award, are neither reimbursable nor recognizable as part of the recipient's cost share.

D. *Format*. 1. Applications for project funding must be complete. Applicants must identify the specific research priority or priorities to which they are responding. For applications containing more than one project, each project component must be identified individually using the format specified in this section. If an application is not in response to a priority, it should be so stated. Applicants should not assume prior knowledge on the part of NMFS as to the relative merits of the project described in the application. Applications are not to be bound in any manner and should be one-sided. All incomplete applications will be returned to the applicant. Applicants must submit one signed original and two copies of the complete application.

2. Applications must be submitted in the following format:

(a) *Cover sheet*: An applicant must use OMB Standard Form 424 (revised 4/92) as the cover sheet for each project. Applicants may obtain copies of these forms from the NOAA Grants Management Division, the NOAA Chesapeake Bay Office (see **ADDRESSES**) or from the NOAA Grants website, *http://www.rdc.noaa.gov/grants/*.

(b) *Project summary*: Each proposal must contain a summary of not more than one page that provides the following:

(1) Project title.
(2) Project status (new).
(3) Project duration (beginning and ending dates).
(4) Name, address, and telephone number of applicant.
(5) Principal Investigator(s).
(6) Project objectives.
(7) Summary of work to be performed.
(8) Total Federal funds requested.
(9) Cost-sharing to be provided from non-Federal sources, if any. Specify whether contributions are project-related cash or in-kind.
(10) Total project cost.

(c) *Project description*: Each project must be completely and accurately described. Each project description may be up to 15 pages in length. If an application is awarded, NMFS will make all portions of the project description available to the public for review; therefore, NMFS cannot guarantee the confidentiality of any information submitted as part of any project, nor will NMFS accept for consideration any project requesting confidentiality of any part of the project.

Each project must be described as follows:

(1) *Identification of problem(s)*: Describe the specific problem to be addressed (see section II).

(2) *Project objectives*: This is one of the most important parts of the Project Proposal. Use the following guidelines for stating the objective of the project.

(a) Keep it simple and easily understandable.
(b) Be as specific and quantitative as possible.
(c) Specify the ''what and when;'' avoid the ''how and why.''
(d) Keep it attainable within the time, money, and human resources available.
(e) Use action verbs that are accomplishment oriented.

(3) *Need for Government financial assistance*: Demonstrate the need for assistance. Any appropriate database to substantiate or reinforce the need for the project should be included. Explain why other funding sources cannot fund all the proposed work. List all other sources of funding that are or have been sought for the project.

(4) *Benefits or results expected*: Identify and document the results or benefits to be derived from the proposed activities.

(5) *Project statement of work*: The Statement of Work is the scientific or technical action plan of activities that are to be accomplished during each budget period of the project. This description must include the specific methodologies, by project job activity, proposed for accomplishing the proposal's objective(s). If the work described in this section does not contain sufficient detail to allow for proper technical evaluation, NMFS will not consider the application for funding and will return it to the applicant.

Investigators submitting proposals in response to this announcement are strongly encouraged to develop inter-institutional, inter-disciplinary research teams in the form of single, integrated proposals or as individual proposals that are clearly linked together. Such collaborative efforts will be factored into the final funding decision.

Each Statement of Work must include the following information:

(a) The applicant's name.

(b) The inclusive dates of the budget period covered under the Statement of Work.

(c) The title of the proposal.

(d) The scientific or technical objectives and procedures that are to be accomplished during the budget period. Devise a detailed set of objectives and procedures to answer who, what, how, when, and where. The procedures must be of sufficient detail to enable competent workers to be able to follow them and to complete scheduled activities.

(e) Location of the work.

(f) A list of all project personnel and their responsibilities.

(g) A milestone table that summarizes the procedures (from item III.D.2.c(5)(d)) that are to be attained in each project month covered by the Statement of Work. Table format should follow sequential month rather than calendar month (i.e., Project period Month 1, Month 2, versus October, November).

(6) *Federal, state and local government activities*: List any programs (Federal, state, or local government or activities, including Sea Grant, state Coastal Zone Management Programs, NOAA Oyster Disease Research Program, the state/Federal Chesapeake Bay Program, etc.) this project would affect and describe the relationship between the project and those plans or activities.

(7) *Project management*: Describe how the project will be organized and managed. Include resumes of principal investigators. List all persons directly employed by the applicant who will be involved with the project. If a consultant and/or subcontractor is selected prior to application submission, include the name and qualifications of the consultant and/or subcontractor and the process used for selection.

(8) *Monitoring of project performance*: Identify who will participate in monitoring the project.

(9) *Project impacts*: Describe how these products or services will be made available to the fisheries and management communities.

(10) *Evaluation of project*: The applicant is required to provide an evaluation of project accomplishments at the end of each budget period and in the final report. The application must describe the methodology or procedures to be followed to determine technical feasibility, or to quantify the results of the project in promoting increased production, product quality and safety, management effectiveness, or other measurable factors.

(11) *Total project costs*: Total project costs is the amount of funds required to accomplish what is proposed in the Statement of Work, and includes contributions and donations. All costs must be shown in a detailed budget. A standard budget form (SF–424A) is available from the offices listed and on the internet (see **ADDRESSES**). NMFS will not consider fees or profits as allowable costs for grantees. Additional cost detail may be required prior to a final analysis of overall cost allowability, allocability, and reasonableness. The date, period covered, and findings for the most recent financial audit performed, as well as the name of the audit firm, the contact person, and phone number and address, must be also provided.

(d) *Supporting documentation*: Provide any required documents and any additional information necessary or useful to the description of the project. The amount of information given in this section will depend on the type of project proposed, but should be no more than 20 pages. The applicant should present any information that would emphasize the value of the project in terms of the significance of the problems addressed. Without such information, the merits of the project may not be fully understood, or the value of the project may be underestimated. The absence of adequate supporting documentation may cause reviewers to question assertions made in describing the project and may result in lower ranking of the project. Information presented in this section should be clearly referenced in the project description.

IV. Review Process and Criteria

A. *Initial Evaluation of Applications*. Applications will be reviewed by NOAA to assure that they meet all requirements of this announcement, including eligibility and relevance to the Chesapeake Bay Stock Assessment Research Program.

B. *Consultation with Experts in the Field of Stock Assessment Research*. For applications meeting the requirements of this solicitation, NMFS will conduct a technical evaluation of each project prior to any other review. This review normally will involve experts from both non-NOAA and NOAA organizations. All comments submitted to NMFS will be taken into consideration in the technical evaluation of projects. Reviewers will be asked to comment on the following evaluation criteria:

1. Problem description and conceptual approach for resolution, especially the applicant's comprehension of the problem(s), familiarity with related work that is completed or ongoing, and the overall concept proposed to resolve the problem(s) (30 points).

2. Soundness of project design/technical approach, especially whether the applicant provided sufficient information to technically evaluate the project and, if so, the strengths and weaknesses of the technical design proposed for problem resolution (35 points).

3. Project management and experience and qualifications of personnel, including organization and management of the project, and the personnel experience and qualifications (15 points).

4. Justification and allocation of the budget in terms of the work to be performed (20 points).

C. *Review Panel*. NMFS will convene a review panel consisting of at least three regionally recognized experts in the scientific and management aspects of stock assessment research who will conduct reviews as follows:

1. Evaluate technical reviews.

2. Provide independent review based on the same criteria as the technical review.

3. Discuss all review comments as a panel.

4. Provide individual panelist scores and suggestions for modifications (i.e., budget, personnel, technical approach, etc.).

D. *Funding Decision*. 1. Applications will be ranked by NMFS into two groups: (a) Recommended, and (b) not recommended.

2. After projects have been evaluated and ranked for funding, the Chief of the NOAA/NMFS Chesapeake Bay Office, in consultation with the Assistant Administrator (AA) for Fisheries, NOAA, will determine the projects to be recommended for funding based upon the technical evaluations, panel review and the evaluation factors, and determine the amount of funds available for the program. Numeric ranking will be the major consideration for deciding which of the ''recommended'' proposals will be selected for funding. In making the final selections, NOAA/NMFS may consider costs, geographical distribution and duplication with other federally funded projects. The Chief of the NOAA/NMFS Chesapeake Bay Office will prepare a written justification for any recommendations for funding that fall outside the ranking order, or for any cost adjustments. Awards are not necessarily made to the highest ranked applications. The exact amount of funds awarded to each project will be determined in preaward negotiations between the applicant, the Grants Office, and the NOAA/NMFS Chesapeake Bay Office staff.

V. Administrative Requirements

A. *Obligations of the Applicant*. 1. *Deliverables*—In addition to periodic status and budget reports, recipients must submit up to an eight page summary of project work and results that will be compiled in an annual report of Chesapeake Bay Stock Assessment Research Program results.

2. *Periodic Workshops*—Investigators will be expected to attend one or two workshops with other Stock Assessment Research Program researchers to encourage interdisciplinary dialogue and forge synthesis of results.

3. *Primary applicant certifications*—All primary applicants must submit a completed Form CD–511, ''Certifications Regarding Debarment, Suspension and Other Responsibility Matters; Drug-Free Workplace Requirements and Lobbying,'' and the following explanations are hereby provided:

(a) *Nonprocurement debarment and suspension*—Prospective participants (as defined at 15 CFR 26.105) are subject to 15 CFR 26, ''Nonprocurement Debarment and Suspension,'' and the related section of the certification form prescribed above applies;

(b) *Drug-free workplace*—Grantees (as defined at 15 CFR 26.605) are subject to 15 CFR 26, subpart F, ''Governmentwide Requirements for Drug-Free Workplace (Grants),'' and the related section of the certification form prescribed above applies;

(c) *Anti-lobbying*—Persons (as defined at 15 CFR 28.105) are subject to the lobbying provisions of 31 U.S.C. 1352, ''Limitation on use of appropriated funds to influence certain Federal contracting and financial transactions, and the lobbying section of the certification form prescribed above applies to applications/bids for grants, cooperative agreements, and contracts for more than $100,000, and loans and loan guarantees for more than $150,000, or the single family maximum mortgage limit for affected programs, whichever is greater; and

(d) *Anti-lobbying disclosure*—Any applicant who has paid or will pay for lobbying using any funds must submit an SF-LLL, ''Disclosure of Lobbying Activities,'' as required under 15 CFR part 28, appendix B.

4. *Lower Tier Certifications*—Recipients shall require applicants/bidders for subgrants, contracts, subcontracts, or other lower tier covered transactions at any tier under the award to submit, if applicable, a completed Form CD–512, ''Certifications Regarding Debarment, Suspension, Ineligibility and Voluntary Exclusion-Lower Tier Covered Transactions and Lobbying'' and disclosure form SF-LLL, ''Disclosure of Lobbying Activities.'' Form CD–512 is intended for the use of recipients and should not be transmitted to DOC. An SF-LLL submitted by any tier recipient or subrecipient should be submitted to DOC in accordance with the instructions contained in the award document. B. *Other requirements*. 1. *Federal policies and procedures*—Recipients and subrecipients are subject to all Federal laws and Federal and DOC policies, regulations, and procedures applicable to Federal financial assistance awards.

2. *Indirect Cost rates*—The budget may include an amount for indirect costs if the applicant has an established indirect cost rate with the Federal government. The total dollar amount of the indirect costs proposed in the application under this program must not exceed the indirect cost rate negotiated and approved by a cognizant Federal agency prior to the proposed effective date of the award. However, the Federal share of the indirect costs may not exceed 25 percent of the total proposed direct costs. Applicants with indirect cost rates above 25 percent may use the amount above the 25–percent level as part of the non-Federal share. Information must be included with the application of the current, approved, negotiated Indirect Cost Agreement with the Federal Government by indicating a web site address or by providing a current copy, if no web site is available.

3. *Past Performance*—Unsatisfactory performance under prior Federal awards may result in an application not being considered for funding. In addition, any recipient and/or researcher who is past due for submitting acceptable progress reports on any previous project funded under this program may be ineligible to be considered for new awards until the delinquent reports are received, reviewed and deemed acceptable by NMFS.

4. *Financial Management Certifications/preaward accounting survey*—Successful applicants, at the discretion of the NOAA Grants Officer, may be required to have their financial management systems certified by an independent public accountant as being in compliance with Federal standards specified in the applicable OMB Circulars prior to execution of the award. Any first-time applicant for Federal grant funds may be subject to a preaward accounting survey by the DOC specified in the applicable OMB Circulars/Code of Federal Regulations prior to execution of the award.

5. *Delinquent Federal debts*—No award of Federal funds shall be made to an applicant who has an outstanding delinquent Federal debt until either:

a. The delinquent account is paid in full;

b. A negotiated repayment schedule is established and at least one payment is received; or

c. Other arrangements satisfactory to DOC are made.

6. *Name checks*—Potential recipients may be required to submit an ''Identification-Application for Funding Assistance''

(Form CD–346), which is used to ascertain background information on key individuals associated with the potential recipient. All non-profit and for-profit applicants are subject to a name check review process. Name checks are intended to reveal if any key individuals associated with the applicant have been convicted of or are presently facing, criminal charges such as fraud, theft, perjury, or other matters that significantly reflect on the applicant's management honesty or financial integrity. Applicants will also be subject to credit check reviews.

7. *False statements*—A false statement on the application is grounds for denial

or termination of funds and grounds for possible punishment by a fine or imprisonment as provided in 18 U.S.C. 1001.

8. *Preaward activities*—If applicants incur any costs prior to an award being made, they do so solely at their own risk of not being reimbursed by the Government. Notwithstanding any verbal or written assurance that may have been received, there is no obligation on the part of DOC to cover preaward costs.

9. *Purchase of American-made equipment and products*—Applicants are hereby notified that they will be encouraged, to the greatest extent practible, to purchase American-made equipment and products with funding provided under this program in accordance with Congressional intent as set forth in the resolution contained in Pub.L 103–317, sections 607(a) and (b).

10. *Other*—If an application is selected for funding, DOC has no obligation to provide any additional funding in connection with that award. Renewal of an award to increase funding or extend the period of performance is at the total discretion of DOC.

Cooperative agreements awarded pursuant to pertinent statutes shall be in accordance with the Fisheries Research Plan (comprehensive program of fisheries research) in effect on the date of the award.

Classification

This action has been determined to be ''not significant'' for purposes of Executive Order 12866.

Applications under this program are subject to Executive Order 12372, ''Intergovernmental Review of Federal Programs.''

Prior notice and an opportunity for public comment are not required by the Administrative Procedure Act or any other law for this notice concerning grants, benefits, and contracts. Therefore, a regulatory flexibility analysis is not required for purposes of the Regulatory Flexibility Act.

This notice contains collections of information subject to the Paperwork Reduction Act, which have been approved by OMB under OMB control number 0648–0044.

Dated: March 15, 2000.

Penelope D. Dalton,

Assistant Administrator for Fisheries, National Marine Fisheries Services.

[FR Doc. 00–7075 Filed 3–21–00; 8:45 am]

BILLING CODE 3510–22–F

DEPARTMENT OF COMMERCE

National Oceanic and Atmospheric Administration

[I.D. 031400F]

Endangered Species; Permits

AGENCY: National Marine Fisheries Service (NMFS), National Oceanic and Atmospheric Administration, Commerce.

ACTION: Receipt of an application for a scientific research permit (1246); receipt of applications to modify permits (900, 1056, 1119, 1140, 1203); issuance of a scientific research permit (1203) and modifications to existing permits (1036, 1102, 1114, 1115, 1212).

SUMMARY: Notice is hereby given of the following actions regarding permits for takes of endangered and threatened species for the purposes of scientific research and/or enhancement: NMFS has received a permit application from Douglas County Public Utility District No. 1 at East Wenatchee, WA (DCPUD)(1246); NMFS has received applications for permit modifications from: Northwest Fisheries Science Center, NMFS at Seattle, WA (900, 1056, 1140), U.S. Fish and Wildlife Service at Leavenworth, WA (USFWS)(1119), and Washington Department of Fish and Wildlife at Olympia, WA (WDFW-O)(1203); NMFS has issued a scientific research permit to WDFW-O (1203); and NMFS has issued modifications to permits to: U.S. Geological Survey at Cook, WA (USGS)(1036), Washington Department of Fish and Wildlife at Vancouver, WA (WDFW-V)(1102), WDFW-O (1114), Chelan County Public Utility District No 1(CCPUD)(1115), and Northwest Fisheries Science Center, NMFS at Seattle, WA (NWFSC)(1212).

DATES: Comments or requests for a public hearing on any of the new applications or modification requests must be received at the appropriate address or fax number (see **ADDRESSES**) no later than 5:00 pm Pacific daylight time on April 21, 2000.

ADDRESSES: Written comments on any of the new applications or modification requests should be sent to Protected Resources Division, F/NWO3, 525 NE Oregon Street, Suite 500, Portland, OR 97232–2737 (503–230–5400). Comments may also be sent via fax to 503–230–5435. Comments will not be accepted if submitted via e-mail or the internet.

Documents may also be reviewed by appointment in the Office of Protected Resources, F/PR3, NMFS, 1315 East-West Highway, Silver Spring, MD 20910–3226 (301–713–1401).

FOR FURTHER INFORMATION CONTACT:

For permits 900, 1056, and 1140: Leslie Schaeffer, Portland, OR (ph: 503–230–5433, fax: 503–230–5435, e-mail: Leslie.Schaeffer@noaa.gov).

For permits 1036, 1102, 1114, 1115, 1119, 1203, 1212, and 1246: Robert Koch, Portland, OR (ph: 503–230–5424, fax: 503–230–5435, e-mail: Robert.Koch@noaa.gov).

SUPPLEMENTARY INFORMATION:

Authority

Issuance of permits and permit modifications, as required by the Endangered Species Act of 1973 (16 U.S.C. 1531–1543) (ESA), is based on a finding that such permits/modifications: (1) Are applied for in good faith; (2) would not operate to the disadvantage of the listed species which are the subject of the permits; and (3) are consistent with the purposes and policies set forth in section 2 of the ESA. Authority to take listed species is subject to conditions set forth in the permits. Permits and modifications are issued in accordance with and are subject to the ESA and NMFS regulations governing listed fish and wildlife permits (50 CFR parts 222–226).

Those individuals requesting a hearing on an application listed in this notice should set out the specific reasons why a hearing on that application would be appropriate (see **ADDRESSES**). The holding of such hearing is at the discretion of the Assistant Administrator for Fisheries, NOAA. All statements and opinions contained in the permit action summaries are those of the applicant and do not necessarily reflect the views of NMFS.

Species Covered in This Notice

The following species and evolutionarily significant units (ESU's) are covered in this notice:

Chinook salmon (*Oncorhynchus tshawytscha*): threatened Snake River (SnR) fall, threatened SnR spring/summer, endangered upper Columbia River (UCR) spring, threatened lower Columbia River (LCR), threatened Puget Sound (PS), threatened Upper Willamette (UW).

Chum Salmon (*O. keta*): threatened Columbia River (CR).

Coho salmon (*O. kisutch*): threatened Southern Oregon/Northern California Coast (SONCC).

Sockeye salmon (*O. nerka*): endangered SnR

Steelhead (*O. mykiss*): endangered UCR, threatened SnR, threatened middle Columbia River (MCR), threatened UW.

To date, final protective regulations for threatened LCR, PS, and UW chinook salmon, CR chum salmon, and SnR, MCR, and UW steelhead under section 4(d) of the ESA have not been promulgated by NMFS. Protective regulations are currently proposed for LCR, PS, and UW chinook salmon and CR chum (65 FR 169, January 3, 2000) and SnR, MCR, and UW steelhead (64 FR 73479, December 30, 1999). This notice of receipt of applications is issued as a precaution in the event that NMFS issues final protective regulations that prohibit takes of these species. The initiation of a 30-day public comment period on the applications, including their proposed takes of LCR, PS, and UW chinook salmon, CR chum, and SnR, MCR, and UW steelhead does not presuppose the contents of the eventual protective regulations.

New Application Received

DCPUD (1246) requests a 5-year scientific research permit to authorize annual takes of juvenile naturally produced and artificially propagated UCR spring chinook salmon and steelhead associated with a study designed to determine if the spring chinook salmon released from the Methow River Fish Hatchery, a mitigation hatchery for losses of juvenile salmon at Wells Dam, interact adversely with natural salmonid production in the Methow River Basin. DCPUD proposes to conduct a monitoring program that will determine if hatchery produced returning adults stray excessively and interbreed with other genetically distinct stocks, if hatchery produced juveniles released from acclimation ponds impact naturally rearing salmon and steelhead, and if the natural production in the donor population is diminished when hatchery reared salmon return to spawn in the natural habitat. The scientific research will provide information on the success of the hatchery program and the potential deleterious impacts to the recovery of ESA-listed chinook salmon and steelhead in the Methow River. ESA-listed juvenile fish are proposed to be captured using beach seines or screw traps, sampled for biological information and/or marked with fin clips, and released. ESA-listed juvenile fish indirect mortalities associated with the research are also requested. DCPUD also requests to collect ESA-listed adult fish carcasses in the basin and sample them for coded wire tags and tissues.

Modification Requests Received

NWFSC requests a modification to permit 900, which authorizes annual takes of juvenile SnR sockeye salmon, juvenile naturally produced and artificially propagated SnR spring/summer chinook salmon, juvenile SnR fall chinook salmon, juvenile naturally produced and artificially propagated UCR steelhead, and juvenile naturally produced and artificially propagated UCR spring chinook salmon associated with a study designed to determine the relative survival of migrating juvenile salmonids at The Dalles Dam on the Columbia River in the Pacific Northwest. For the modification, NWFSC requests an annual take of juvenile MCR steelhead and an increase in the annual take of juvenile naturally produced UCR steelhead associated with the research. The additional take is requested because steelhead stock abundance estimates in the Snake River and the upper- and mid-Columbia River have recently been revised. ESA-listed juvenile fish are proposed to be collected from the juvenile bypass system at John Day Dam, held for a period of time (up to six hours), anesthetized, tagged with Passive Integrated Transponders (PIT) or allowed to recover from the anesthetic and released. PIT tagged fish will be allowed to recover from the anesthetic, transported and held for one day, and then released in front of The Dalles Dam spillway, sluiceway, turbines, or downstream from the dam. PIT-tag interrogations made at Bonneville Dam and Rice Island under separate authorizations will be used to estimate relative survival of the release groups. ESA-listed juvenile steelhead indirect mortalities associated with the research are also requested. The modification is requested to be valid for the duration of permit 900, which expires on December 31, 2000.

NWFSC requests a modification to permit 1056, which authorizes annual takes of adult and juvenile naturally produced and artificially propagated SnR spring/summer chinook salmon associated with two studies designed to monitor wild salmon smolt migration timing, genetic change, and population structure over time. For the modification, NWFSC requests an annual take of juvenile MCR steelhead and an expansion of work locations associated with a new study designed to investigate marine derived nutrients in freshwater streams. New methods for taking fish (dip-netting, minnow-trapping, and angling) are also requested. A lethal take of juvenile MCR steelhead is also requested. Juvenile chinook salmon and steelhead are proposed to be taken from various locations in the Snake and John Day River Basins and analyzed for the presence of marine derived nutrients. Salmon and steelhead abundance and average body size will be determined by snorkel surveys or electrofishing sampling. ESA-listed juvenile steelhead indirect mortalities associated with the research are also requested. The modification is requested to be valid for the duration of permit 1056, which expires on December 31, 2001.

USFWS requests a modification to permit 1119, which authorizes annual takes of adult and juvenile UCR spring chinook salmon and steelhead associated with four studies in the UCR Basin. The purpose of Study 1 is to gather data on emerging juvenile salmon and steelhead in the Entiat River Basin. The purpose of Study 2 is to conduct snorkel surveys in various watersheds as part of inventory and artificial structure monitoring projects. The data obtained from both studies will be used to determine the survival and contribution of salmonids released from USFWS mitigation hatchery programs in central WA and to provide technical assistance to the agencies, Tribes, and interest groups that are using and/or managing aquatic resources in the mid- to UCR Basin. Study 3 involves spawning ground surveys in the Entiat River Basin designed to estimate the numbers of adult salmonids utilizing the basin. Study 4 is designed to evaluate the feasibility of restoring endangered UCR steelhead above barriers in Icicle Creek, a tributary to the Wenatchee River. For the modification, USFWS requests an increase in the ESA-listed juvenile steelhead take associated with Study 1. USFWS determined that the current level of steelhead take for Study 1 in Permit 1119 is not enough to conduct a statistically valid assessment of the juvenile steelhead emigration from the Entiat River throughout the annual outmigration season. ESA-listed juvenile steelhead are proposed to be captured with a rotary-screw trap, sampled for biological information, and released. The modification is requested to be valid for the duration of permit 1119, which expires on December 31, 2002.

NWFSC requests a modification to permit 1140, which authorizes annual takes of juvenile SnR sockeye salmon, juvenile SnR fall chinook salmon, juvenile naturally produced and artificially propagated SnR spring/summer chinook salmon, juvenile SONCC coho salmon, juvenile naturally produced and artificially propagated UCR steelhead, and juvenile naturally produced and artificially propagated UCR spring chinook salmon associated with a research study designed to assess the relationship between environmental

variables, selected anthropogenic stresses, and bacterial and parasitic pathogens on disease-induced mortality of juvenile salmon in selected coastal estuaries in Oregon and Washington. The results of the study will benefit ESA-listed species by providing a better understanding of how environmental factors influence disease. For the modification, NWFSC requests annual takes of juvenile PS chinook salmon, juvenile UW chinook salmon, juvenile LCR chinook salmon, juvenile CR chum salmon, juvenile UW steelhead, and juvenile MCR steelhead associated with the research. ESA-listed juvenile fish are proposed to be taken with seines, purse seines, and/or fyke nets in selected coastal estuaries in Oregon and Washington and analyzed for pathogen prevalence and intensity, chemical analyses, histopathology, and stomach contents. A lethal take of PS chinook salmon is requested and ESA-listed juvenile fish indirect mortalities associated with the research are also requested. The modification is requested to be valid for the duration of permit 1140, which expires on December 31, 2002.

WDFW requests a modification to permit 1203, which authorizes annual takes of adult and juvenile naturally produced and artificially propagated UCR spring chinook salmon and steelhead associated with five research studies in the tributaries and mainstem of the UCR. The purpose of Study 1 is to evaluate the annual production of emigrating juvenile salmonid populations. The purpose of Study 2 is to assess the annual escapement of adult salmonids in the UCR Basin. The purpose of Study 3 is to conduct spawning ground surveys to evaluate annual salmonid reproductive success in the UCR Basin. The purpose of Study 4 is to document the presence or absence of salmonids throughout the UCR Basin to determine salmonid distribution and habitat utilization. The purpose of Study 5 is to conduct stream habitat and salmonid presence/absence surveys throughout the UCR Basin to determine the potential impacts on, or benefits to, fish and fish habitat resulting from proposed hydraulic projects. For the modification, WDFW requests an increase in the annual takes of ESA-listed juvenile salmon and steelhead associated with a new anadromous fish production monitoring and assessment project. WDFW proposes to use a rotary screw trap in the lower Wenatchee River to monitor the natural freshwater production of salmonid species and collect life history information. The annual production data will become a key indicator of salmonid recovery in the Wenatchee River Basin. ESA-listed juvenile fish are proposed to be captured, sampled for biological information, and released or captured, marked with fin clips, and released. Increases in ESA-listed juvenile fish indirect mortalities associated with the research are also requested. The modification is requested to be valid for the duration of permit 1203, which expires on December 31, 2003.

Permits and Modifications Issued

Notice was published on February 11, 1999 (64 FR 6880), that USGS had applied for a modification to scientific research permit 1036. Modification 2 to permit 1036 was issued on March 10, 2000, and authorizes annual takes of adult and juvenile UCR spring chinook salmon in the Hanford Reach of the Columbia River to predict the effects of reservoir drawdown on juvenile salmonids and their predators in free-flowing river reaches and to compare the effects with a similar study in the Hells Canyon Reach of the Snake River. Modification 2 also authorizes USGS to change the location of fish sampling for a race and residualism study. ESA-listed juvenile fish indirect mortalities are also authorized. Modification 2 to permit 1036 is valid for the duration of the permit, which expires on December 31, 2001.

Notice was published on April 26, 1999 (64 FR 20266), that WDFW-V had applied for a modification to scientific research permit 1102. Permit 1102 authorizes WDFW-V annual takes of adult UCR steelhead; adult SnR spring/summer chinook salmon; and adult SnR fall chinook salmon associated with two scientific research studies. The purpose of Study 1 is to determine the number and timing of wild and hatchery steelhead adults that pass Bonneville Dam on the Columbia River. The purpose of Study 2 is to determine the genetic stock identification of anadromous adult fish harvested in Columbia River fisheries, including fisheries conducted by Native Americans. Data will be used to determine the fishery impacts to ESA-listed stocks and if possible, to shape fisheries to reduce impacts to ESA-listed or depressed stocks while focusing harvest on healthy stocks. Modification 1 to permit 1102 was issued on March 10, 2000, and designates the Columbia River Inter-Tribal Fish Commission (CRITFC) as an agent of WDFW-V under Permit 1102. WDFW-V and CRITFC work cooperatively at Bonneville Dam for much of the research sampling season for Study 1. The take of ESA-listed adult chinook salmon that WDFW-V requested in March 1999 for Study 1 will be included in CRITFC's scientific research Permit 1134, since CRITFC is targeting adult chinook salmon at Bonneville Dam and requested the identical take as WDFW in 1999. Modification 1 also authorizes WDFW-V to collect tissue samples and scales from adult UCR spring chinook salmon that are harvested incidental to treaty and non-treaty fisheries in the Columbia River Basin (Study 2). Modification 1 to permit 1102 is valid for the duration of the permit, which expires on January 31, 2003.

Notice was published on March 9, 1999 (64 FR 11444), that WDFW-O had applied for a modification to scientific research permit 1114. Modification 2 to permit 1114 was issued on March 10, 2000, and authorizes takes of juvenile UCR spring chinook salmon associated with research designed to collect information on adult and juvenile fish migration timing, survival, travel timing, and general fish health. Indirect mortalities of juvenile naturally produced and artificially propagated UCR spring chinook salmon associated with Study 1 are also authorized. Modification 2 to permit 1114 is valid for the duration of the permit, which expires on January 31, 2003.

Notice was published on January 15, 1998 (63 FR 2364), that CCPUD had applied for a scientific research permit. Permit 1115 was issued on April 10, 1998, and authorized the annual take of juvenile naturally produced and artificially propagated UCR steelhead associated with research to evaluate the juvenile fish bypass system installed at Rocky Reach Dam and monitor juvenile fish gas bubble trauma at Rocky Reach and Rock Island Dams on the Columbia River. NMFS issued an amendment to permit 1115 on March 10, 2000, which authorizes CCPUD annual direct takes of adult and juvenile naturally produced and artificially propagated UCR spring chinook salmon associated with the research. An associated indirect mortality of juvenile naturally produced and artificially propagated UCR spring chinook salmon is also authorized. The amendment to permit 1115 is valid for the duration of the permit, which expires on December 31, 2002.

Notice was published on March 9, 1999 (64 FR 11444), that WDFW-O had applied for a scientific research permit to authorize takes of adult and juvenile UCR spring chinook salmon. On June 3, 1999 (64 FR 29839), a notice was published that

WDFW-O had requested authorization to add takes of adult and juvenile UCR steelhead to the original request. Permit 1203 was issued on March 10, 2000, and authorizes WDFW-O takes of these species associated with five research studies in the UCR tributaries and the mainstem river. In Study 1, WDFW-O will assess migrating juvenile salmonid populations. In Study 2, WDFW-O will trap returning adults at fish ladders, record biological information, and release them upstream. In Study 3, WDFW-O will survey spawning grounds to identify redds and collect biological data from carcasses. Tissue samples taken from the carcasses will be deposited at the WDFW Laboratory in Olympia, WA for analysis. In Study 4, WDFW-O will assess the capacity of salmonid habitat. In Study 5, WDFW-O will conduct presence/absence studies by using electrofishers to determine the distribution of salmonids in various watersheds. Data from these five studies will provide managers valuable information that will be used to assess the survival of migrating juvenile salmonids, the abundance of adults on spawning grounds, the annual success of spawners, and the relative abundance of salmonids in the available habitat. Indirect mortalities of adult and juvenile ESA-listed fish are also authorized. Permit 1203 expires on December 31, 2003.

Notice was published on March 25, 1999 (64 FR 14432), that NWFSC had applied for a scientific research permit. Permit 1212 was issued on May 26, 1999, and authorized the annual take of juvenile SnR sockeye salmon, juvenile naturally produced and artificially propagated SnR spring/summer chinook salmon, juvenile SnR fall chinook salmon, and juvenile naturally produced and artificially propagated UCR steelhead associated with four studies at hydropower dams on the Snake and Columbia Rivers in the Pacific Northwest. NMFS issued an amendment to permit 1212 on March 10, 2000, which authorizes NWFSC annual direct takes of juvenile naturally produced and artificially propagated UCR spring chinook salmon in study 1 as well as an associated indirect mortality of juvenile naturally produced and artificially propagated UCR spring chinook salmon. The amendment to permit 1212 is valid for the duration of the permit, which expires on December 31, 2003.

Dated: March 16, 2000.

Wanda L. Cain,

Chief, Endangered Species Division, Office of Protected Resources, National Marine Fisheries Service.

[FR Doc. 00–7076 Filed 3–21–00; 8:45 am]

BILLING CODE 3510–22–F

COMMITTEE FOR THE IMPLEMENTATION OF TEXTILE AGREEMENTS

Settlement of a Call and Establishment of an Import Limit for Certain Man-Made Fiber Textile Products Produced or Manufactured in Belarus

March 16, 2000.

AGENCY: Committee for the Implementation of Textile Agreements (CITA).

ACTION: Issuing a directive to the Commissioner of Customs settling a call and establishing a limit.

EFFECTIVE DATE: March 23, 2000.

FOR FURTHER INFORMATION CONTACT: Naomi Freeman, International Trade Specialist, Office of Textiles and Apparel, U.S. Department of Commerce, (202) 482–4212. For information on the quota status of this limit, refer to the Quota Status Reports posted on the bulletin boards of each Customs port, call (202) 927–5850, or refer to the U.S. Customs website at http://www.customs.ustreas.gov. For information on embargoes and quota re-openings, call (202) 482–3715.

SUPPLEMENTARY INFORMATION:

Authority: Section 204 of the Agricultural Act of 1956, as amended (7 U.S.C. 1854); Executive Order 11651 of March 3, 1972, as amended.

A notice published in the **Federal Register** on December 22, 1999 (64 FR 71982) established a twelve-month limit of 6,480,552 square meters for glass fiber fabric in Category 622, produced or manufactured in Belarus and exported to the United States during the twelve-month period which began on September 17, 1999 and extends through September 16, 2000.

In the Memorandum of Understanding (MOU) between the Governments of the United States and Belarus, dated February 17, 2000, the governments agreed to establish a new limit for Category 622 of 11,500,000 square meters, effective for the period January 1, 2000 through December 31, 2000.

In addition, both governments agreed to establish a sublimit of 1,000,000 square meters for the entry for consumption and withdrawal from warehouse for consumption of glass fiber fabric in Category 622–L weighing 185 grams or less per square meter. The Category 622–L limit is not currently being implemented but will be in the near future; import charges for this category will be provided to the U.S. Customs service at a later date after the necessary statistical breakouts have been established.

This limit may be revised if Belarus becomes a member of the World Trade Organization (WTO) and the United States applies the WTO agreement to Belarus.

A description of the textile and apparel categories in terms of HTS numbers is available in the CORRELATION: Textile and Apparel Categories with the Harmonized Tariff Schedule of the United States (see **Federal Register** notice 64 FR 71982, published on December 22, 1999; this notice precedes the Belarus notice in the same issue of the **Federal Register**).

Troy H. Cribb,

Chairman, Committee for the Implementation of Textile Agreements.

Committee for the Implementation of Textile Agreements

March 16, 2000

Commissioner of Customs,
Department of the Treasury, Washington, DC 20229.

Dear Commissioner: This directive cancels and supersedes the directive issued to you on December 17, 1999. That directive concerns imports of certain man-made fiber textile products, produced or manufactured in Belarus and exported during the twelve-month period which began on September 17, 1999 and extends through September 16, 2000.

Pursuant to section 204 of the Agricultural Act of 1956, as amended (7 U.S.C. 1854); Executive Order 11651 of March 3, 1972, effective on March 23, 2000, you are directed to prohibit entry into the United States for consumption and withdrawal from warehouse for consumption of glass fiber fabric products in Category 622, produced or manufactured in Belarus and exported during the twelve-month period which began on January 1, 2000 and extends through December 31, 2000, in excess of 11,500,000 square meters [1].

Textile products in Category 622 which have been exported to the United States prior to January 1, 2000 shall not be subject to the limit established in this directive.

This limit may be revised if Belarus becomes a member of the World Trade Organization (WTO) and the United States applies the WTO agreement to Belarus.

You are directed to keep all current charges, but deduct 2,864,349 square meters from the charges for goods in Category 622 exported during the period September 17, 1999 through December 31, 1999.

[1] The limit has not been adjusted to account for any imports exported after December 31, 1999.

In carrying out the above directions, the Commissioner of Customs should construe entry into the United States for consumption to include entry for consumption into the Commonwealth of Puerto Rico.

The Committee for the Implementation of Textile Agreements has determined that this action falls within the foreign affairs exception of the rulemaking provisions of 5 U.S.C.553(a)(1).

Sincerely,

Troy H. Cribb,

Chairman, Committee for the Implementation of Textile Agreements.

[FR Doc.00–7095 Filed 3–21–00; 8:45 am]

BILLING CODE 3510–DR–F

CORPORATION FOR NATIONAL AND COMMUNITY SERVICE

Availability of Funds for AmeriCorps*VISTA Tribal Grants and Placements of AmeriCorps*VISTA Members

AGENCY: Corporation for National and Community Service.

ACTION: Notice of availability of funds.

SUMMARY: The Corporation for National and Community Service (hereinafter ''the Corporation'') announces the availability of funds for fiscal year 2000 for new AmeriCorps*VISTA (Volunteers in Service to America) program grants and placements focusing on meeting the needs of Indian tribes. The Corporation is soliciting applications from Indian tribes and Native American non-profit organizations to accomplish such grants and placements. Approximately five to seven grants/projects, supporting about 50 AmeriCorps*VISTA members, are expected to be awarded in June, 2000.

DATES: Applications must be received by 5 p.m. May 22, 2000.

ADDRESSES: Background information, including project applications, are available from the Corporation for National and Community Service, AmeriCorps*VISTA, 1201 New York Ave., NW, Washington, DC 20525; (202) 606–5000, ext. 134; TDD (202) 565–2799, or TTY via the Federal Information Relay Service at (800) 877–8339. One signed original and two copies of the application should be submitted to the Corporation for National and Community Service, 1201 New York Avenue, NW, Attn: Cynthia Johnson, Washington, DC 20525. The Corporation will not accept applications that are submitted via facsimile or e-mail transmission. Applications submitted via overnight mail that arrive after the closing date will be accepted if they are postmarked at least two days prior to the closing date. Otherwise, late applications will not be accepted.

FOR FURTHER INFORMATION CONTACT: For further information, contact Cynthia Johnson, at 202–606–5000, ext. 541.

SUPPLEMENTARY INFORMATION:

A. Background

The Corporation is a federal government corporation that encourages Americans of all ages and backgrounds to engage in community-based service. This service addresses the nation's educational, public safety, environmental and other human needs to achieve direct and demonstrable results. In doing so, we strive to foster civic responsibility, strengthen the ties that bind us together as a people, and provide educational opportunity for those who make a substantial commitment to service. We support a range of national service programs, including AmeriCorps, Learn and Serve America, and the National Senior Service Corps.

AmeriCorps*VISTA, a component of AmeriCorps, is authorized under the Domestic Volunteer Service Act of 1973, as amended (Pub. L. 93–113). The statutory mandate of AmeriCorps*VISTA is ''to strengthen and supplement efforts to eliminate and alleviate poverty and poverty-related problems in the United States by encouraging and enabling persons from all walks of life, all geographical areas, and all age groups * * * (to) assist in the solution of poverty and poverty-related problems, and * * * to generate the commitment of private sector resources, to encourage volunteer service at the local level, and to strengthen local agencies and organizations to carry out the purpose (of the program).'' (42 U.S.C. 4951)

AmeriCorps*VISTA carries out its legislative mandate by assigning individuals 18 years and older, on a full-time, year-long basis, to public and private non-profit organizations whose goals are in accord with AmeriCorps*VISTA's legislative mission. Each AmeriCorps*VISTA project must focus on the mobilization of community resources, the transference of skills to community residents, and the expansion of the capacity of community-based organizations to solve local problems. Programming should encourage permanent, long-term solutions to problems confronting low-income communities rather than short-term approaches for handling emergency needs.

AmeriCorps*VISTA project sponsors must actively elicit the support and/or participation of local public and private sector elements in order to enhance the chances of a project's success as well as to make the activities undertaken by AmeriCorps*VISTA members self-sustaining when the Corporation no longer provides resources.

B. Purpose of This Announcement

The United States has a unique legal relationship with Indian tribal governments as set forth in the Constitution of the United States, treaties, statutes, Executive orders, and court decisions. In treaties, our Nation has guaranteed the right of Indian tribes to self-government. As domestic dependent nations, Indian tribes exercise inherent sovereign powers over their members and territory. The United States continues to work with Indian tribes on a government-to-government basis to address issues concerning Indian tribal self-government, trust resources, and Indian tribal treaty and other rights.

Under the National and Community Service Act of 1990, as amended, American Indian Tribes receive funding directly from the Corporation for National Service through a 1% set-aside of the overall funding for AmeriCorps programs, and a 3% set-aside in Learn and Serve America. There is no set-aside for Indian tribes under the Domestic Volunteer Service Act. Although many AmeriCorps*VISTA members serve in programs in Indian country, this notice provides a unique opportunity to enter into formal arrangements with Indian tribes as sovereign entities and to increase the number of Native Americans serving in AmeriCorps*VISTA.

Proposals are sought that make appropriate use of AmeriCorps*VISTA members to accomplish the goals set forth in authorizing legislation.

In particular, the following proposals are sought under this announcement: (a) Economic development in conjunction with tribal development plans, including welfare to work; (b) literacy, mentoring, and other assistance designed to meet the education needs of young Indians; and (c) efforts to bridge the technology gap among Native American populations.

C. Eligible Applicants

Indian tribes and Native-run non-profit organizations are eligible applicants under this announcement. An Indian tribe is defined as follows: A federally-recognized Indian Tribe, band, nation, or other organized group or community, including any Native village, Regional corporation, or Village Corporation, as defined under the

Alaska Native Claims Settlement Act (43 U.S.C. 1602), that the United States Government determines is eligible for special programs and services provided under federal law to Indians because of their status as Indians. Indian Tribes also include any tribal organization controlled, sanctioned, or chartered by one of the entities described above. We will also consider applications from Indian tribes that are state-recognized, or in the process of seeking federal recognition.

A non-profit organization, to be eligible to apply under this announcement, must be recognized and approved by the Indian tribe(s) being served as the entity with authority to carry out the project. Documentation of such recognition and approval must be included in the application.

D. Scope of Grant and Project

It is anticipated that each grant will support between 5–15 AmeriCorps*VISTA members on a full-time basis for one year of service and that each non-grant project approved for placement of members will support between 2–5 members. Technical assistance will be provided by the Corporation in order to enable those tribes selected under this announcement to complete project applications, including detailed budgets.

Each grant will include funds for the grantee to pay: a monthly subsistence allowance for AmeriCorps*VISTA members that is commensurate with the cost-of-living of the assignment area and covers the cost of food, housing, utilities, and incidental expenses; an end-of-service cash stipend payment, accrued at the rate of $100 per month, for those members not selecting the AmeriCorps education award of $4,725; and relocation expenses for those AmeriCorps*VISTA members who must relocate in order to serve. The grant will also include funds for member in-service training, member supervision, and member/supervisor job-related transportation.

Grant applicants should demonstrate their commitment to matching the Federal contribution toward the operation of the AmeriCorps*VISTA program grant by offsetting all, or part of, the costs of member supervision, transportation, and training, as well as the basic costs of the program itself (*e.g.,* space, telephone, etc.). This support can be achieved through cash or in-kind contributions.

Further, grantees are encouraged to share in the costs of the program, including paying for a specified number of AmeriCorps*VISTA positions, to include all costs except for the education award and health care, which will be paid by the Corporation.

Grants will be awarded, and projects approved, on a twelve-month basis with a renewal option subject to need, satisfactory performance, and the availability of Corporation resources.

Some projects may not be awarded a grant but may be approved for the placement of AmeriCorps*VISTA members. These will typically be projects that can benefit from only a few members.

Publication of this announcement does not obligate the Corporation to award any specific number of grants or to obligate the entire amount of funds available, or any part thereof, for grants under the AmeriCorps*VISTA program, or to approve any specific number of non-grant projects for the placement of AmeriCorps*VISTA members.

E. Responsibilities of Grantee

Applicant organizations must have: The existing capacity and experience needed to monitor and support a project; demonstrated strong institutional commitment of personnel, resources, training and technical expertise; and a strong and well-coordinated project rather than loosely tying together several unrelated activities.

After selection, the Corporation State Office will work with the local Indian tribe or non-profit organization to finalize Part A (CNS Form 1421A) (OMB Control Number 3045–0039) of the application, develop Part B (CNS Form 1421B) (OMB Control Number 3045–0038) of the project application, assist in recruiting tribal members to serve as AmeriCorps*VISTA members, and discuss various implementation issues including in-service training and technical assistance for the members. The Corporation State Office also provides training to AmeriCorps*VISTA supervisors through periodic site visits and meetings with supervisors. A Project Progress Report (CNS Form 1433) (OMB Control Number 3045–0043) is submitted to the Corporation State Office on a quarterly basis.

F. Submission Requirements

To be considered for funding, applicants must submit one signed original and two copies, of Part A of the AmeriCorps*VISTA application that contains the material requested in that application, including the following:

1. A one-page narrative summary description, single-spaced, single-sided, of the proposed AmeriCorps*VISTA project including the name, address, telephone number, and contact person for the applicant organization. The summary should include the major objectives and expected outcomes of the project. The summary will be used as a project abstract to provide reviewers with an introduction to the substantive parts of the application. Therefore, care should be taken to produce a summary that accurately and concisely reflects the proposal.

2. A description of the project to be performed, including specific outcomes over the length of the project. These outcomes must be specified over the length of the project, as well as during the first year of the project.

3. A description of the AmeriCorps*VISTA members' assignments, that is, what specifically members will be doing.

4. Current resume of potential AmeriCorps*VISTA supervisor(s), if available, or resume of the director of the applicant organization.

5. Organizational chart illustrating the location of the AmeriCorps*VISTA project within the overall applicant organization.

6. Documentation from organizations and/or individuals that will be collaborating in the overall project effort.

G. Criteria for Project Selection

All of the following elements will be used in judging the applications:

a. Getting Things Done

The proposed project must:

1. Address the needs of low-income communities and otherwise comply with the provisions of the Domestic Volunteer Service Act of 1973, as amended (42 U.S.C. 4951 *et seq.*) applicable to AmeriCorps*VISTA and all applicable published regulations, guidelines, and Corporation policies.

2. Contain clear and measurable objectives/outcomes in the project application for a 12-month period that address the overall objectives of the initiative. Proposed projects must show how the activities of the AmeriCorps*VISTA members contribute to specific outcomes related to increased opportunity for low-income people. It is expected that outcome objectives will reflect the evolution of the project over the 12-month period.

3. Indicate how the proposed project complements and/or enhances activities already underway in, or planned for, the community(ies) which will be served by the project. To the extent possible, projects should seek out opportunities to collaborate with other Corporation programs, as well as with other community partners, including the business sector.

4. Describe how the number of AmeriCorps*VISTA members requested is appropriate for the project goals/objectives, and how the skills requested are appropriate for the assignment(s).

b. Strengthening Communities

The proposed project must:

1. Describe how the project will develop a sustainable capacity in the local community to effectively support the long-term self-sufficiency of the community. Project services should provide assistance oriented towards long-term solutions.

2. Demonstrate collaboration with organizations which provide supportive services to enhance project outcomes.

3. Be designed to generate public and/or private sector resources, and to promote local, part-time volunteer service at the community level.

4. Describe in measurable terms the anticipated self-sufficiency outcomes at the conclusion of the project, including outcomes related to the sustainability of the project activities.

c. Member Development

The proposed project must:

1. Clearly state how AmeriCorps*VISTA members will be trained, supervised, and supported to ensure the achievement of program goals and objectives as stated in the project work plan.

2. Describe how AmeriCorps*VISTA assignments are designed to utilize the full-time AmeriCorps*VISTA members' time to the maximum extent.

II. Organizational Capacity

The proposed project must:

1. Ensure that resources needed to achieve project goals and objectives are available.

2. Have the management and technical capability to implement the project successfully.

3. Have a track record or experience in dealing with the issues addressed by the proposed project.

4. Have systems for the evaluation and monitoring of project activities. Applicants must describe the methods that will be used to track progress toward the stated objectives, and the procedures that will provide the feedback needed to make adjustments and improve program quality.

III. Budget/Cost-Effectiveness

The proposed project must:

1. Include a budget that adequately supports the program design.

2. Include a budget that adheres to budget guidance provided with the application.

3. Describe how the applicant organization is committing resources necessary for program implementation.

H. Application Review

Proposal Evaluation

To ensure fairness to all applicants, the Corporation reserves the right to take action, up to and including disqualification, in the event that an application fails to comply with any requirements specified in this Notice.

The following weights will be used in judging the elements described above.

1. Program Design (60%) in the following order of importance:

a. Responsiveness to Strengthening Communities Criteria

b. Responsiveness to Getting Things Done Criteria

c. Responsiveness to Member Development Criteria

2. Organizational Capacity (25%).

3. Budget (15%).

I. Geographic Diversity

After evaluating the overall quality of the proposal and its responsiveness to the criteria noted above, the Corporation will take into consideration whether funded projects are in areas of high concentration of low-income residents, including for example those in empowerment zones, and enterprise communities.

J. Technical Assistance

An informal, technical assistance conference call will be scheduled on Monday, April 10, 2000, at 4 p.m. E.S.T. All applicants must pre-register by faxing the names, organization and phone number of up to two members planning to participate. This information should be faxed to Michael Wagner at 202–565–2789. Questions may be submitted in advance of the meeting via fax to the above number.

K. Program Authority

Corporation authority to make these grants and approve projects is authorized under Title I, Part A of the Domestic Volunteer Service Act of 1973, as amended (Pub. L. 93–113).

Dated: March 17, 2000.

Gary Kowalczyk,

Coordinator of National Service Programs, Corporation for National and Community Service.

[FR Doc. 00–7107 Filed 3–21–00; 8:45 am]

BILLING CODE 6050–28–U

DEPARTMENT OF DEFENSE

Offsets in Defense Trade

AGENCY: Department of Defense.

ACTION: Request for public comments.

SUMMARY: The Interagency Offset Steering Committee is seeking information that will assist the Committee in developing strategies for discussions/consultations with other countries on reducing or eliminating the adverse effects of offsets in defense trade. Offsets by their nature are market distorting and result in inefficient business practices. Interested parties are involved to submit written comments, opinions, data, information, or recommendations relative to this objective, including information that will help the Committee more accurately assess the effects of offsets in defense trade. If sufficient interest is demonstrated, a public hearing might be scheduled in the future.

DATES: Comments must be received no later than May 8, 2000.

ADDRESSES: Send all comments to Domenico C. Cipicchio, Deputy Director, Defense Procurement, Foreign Contracting, OUSD (AT&L), 3060 Defense Pentagon, Washington, DC 20301–3060.

FOR FURTHER INFORMATION CONTACT: Susan M. Hildner, Procurement Analyst, Defense Procurement, Foreign Contracting, OUSD(AT&L), 3060 Defense Pentagon, Washington, DC 20301–3060, (703) 697–9352.

SUPPLEMENTARY INFORMATION: In accordance with Section 123 of the Defense Production Act as amended in 1992 (Public Law 102–588, October 28, 1992), an Interagency Offset Steering Committee has been conducting a series of discussions with its allies on defense offsets. The Committee is chaired by the Department of Defense and includes representatives from the Departments of Commerce, State and Labor and the Office of the United States Trade Representative. The Committee plans to hold discussions with all 21 countries with which we have a reciprocal procurement Memorandum of Understanding. These countries include: Australia, Austria, Belgium, Canada, Denmark, Egypt, Finland, France, Federal Republic of Germany, Greece, Israel, Italy, Luxembourg, Netherlands, Norway, Portugal, Spain, Sweden, Switzerland, Turkey, and the United Kingdom. The Committee is interested in data and recommendations that will support these discussions and aid in strategy development with respect to reducing or eliminating offsets in defense trade. Interested parties are invited to submit written comments to assist the Committee in its deliberations and discussions.

All materials should be submitted with 5 copies. Material that is business confidential information will be exempted from public disclosure as provided for by 5 U.S.C. 552(b)(4) (Freedom of Information Act (FOIA) rules). Anyone submitting business confidential information should clearly identify the business confidential portion of the submission and also provide a non-confidential submission, which can be placed in the public file. Comments not marked business confidential may be subject to disclosure under FOIA.

Michele P. Peterson,

Executive Editor, Defense Acquisition Regulations Council.

[FR Doc. 00–7065 Filed 3–21–00; 8:45 am]

BILLING CODE 5000–04–M

DEPARTMENT OF DEFENSE

[OMB Control Number 0704–0216]

Information Collection Requirement; Defense Federal Acquisition Regulation Supplement; Bonds and Insurance

AGENCY: Department of Defense (DoD).

ACTION: Notice and request for comments regarding a proposed extension of an approved information collection requirement.

SUMMARY: In compliance with Section 3506(c)(2)(A) of the Paperwork Reduction Act of 1995 (44 U.S.C. Chapter 35), DoD announces the proposed extension of a public information collection requirement and seeks public comment on the provisions thereof. DoD invites comments on: (a) whether the proposed collection of information is necessary for the proper performance of the functions of DoD, including whether the information will have practical utility; (b) the accuracy of the estimate of the burden of the proposed information collection; (c) ways to enhance the quality, utility, and clarity of the information to be collected; and (d) ways to minimize the burden of the information collection on respondents, including the use of automated collection techniques or other forms of information technology. The Office of Management and Budget (OMB) has approved this information collection for use through May 31, 2001. DoD proposes that OMB approve an extension of the information collection requirement, to expire 3 years after the approval date.

DATES: DoD will consider all comments received by May 22, 2000.

ADDRESSES: Interested parties should submit written comments and recommendations on the proposed information collection to: Defense Acquisition Regulations Council, Attn: Ms. Amy Williams, PDUSD (AT&L) DP (DAR), IMD 3D139, 3062 Defense Pentagon, Washington, DC 20301–3062. Telefax (703) 602–0350.

E-mail comments submitted via the Internet should be addressed to: dfar@acq.osd.mil.

Please cite OMB Control Number 0704–0216 in all correspondence related to this issue. E-mail comments should cite OMB Control Number 0704–0216 in the subject line.

FOR FURTHER INFORMATION CONTACT: Ms. Amy Williams, (703) 602–0288. The information collection requirement addressed in this notice is available electronically via the Internet at:

http://www.acq.osd.mil/dp/dars/dfars.html.

Paper copies are available from Ms. Amy Williams, PDUSD (AT&L) DP (DAR), IMD 3D139, 3062 Defense Pentagon, Washington, DC 20301–3062.

SUPPLEMENTARY INFORMATION:

Title, Associated Form, and OMB Number: Defense Federal Acquisition Regulation Supplement (DFARS) Part 228, Bonds and Insurance, and related clauses at 252.228; OMB Control Number 0704–0216.

Needs and Uses: DoD uses the information obtained through this collection to determine the allowability of a contractor's costs of providing war-hazard benefits to its employees; to determine the need for an investigation regarding an accident the occurs in connection with a contract; and to determine whether a contractor performing a service or construction contract in Spain has adequate insurance coverage.

Affected Public: Businesses or other for-profit and not-for-profit institutions.

Annual Burden Hours: 859.

Number of Respondents: 49.

Responses Per Respondents: 1.

Annual Responses: 49.

Average Burden Per Response: 17.53 hours.

Frequency: On occasion.

Summary of Information Collection

The clause at DFARS 252.228–7000, Reimbursement for War-Hazard Losses, requires the contractor to provide notice and supporting documentation to the contracting officer regarding claims or potential claims for costs of providing war-hazard benefits to contractor employees.

The clause at DFARS 252.228–7005, Accident Reporting and Investigation Involving Aircraft, Missiles, and Space Launch Vehicles, requires the contractor to report promptly to the administrative contracting officer all pertinent facts relating to each accident involving an aircraft, missile, or space launch vehicle being manufactured, modified, repaired, or overhauled in connection with the contract.

The clause at DFARS 252.228–7006, Compliance with Spanish Laws and Insurance, requires the contractor to provide the contracting officer with a written representation that the contractor has obtained the required types of insurance in the minimum amounts specified in the clause, when performing a service or construction contract in Spain.

Michele P. Peterson,

Executive Editor, Defense Acquisition Regulations Council.

[FR Doc. 00–7066 Filed 3–21–00; 8:45 am]

BILLING CODE 5000–04–M

DEPARTMENT OF EDUCATION

Notice of Proposed Information Collection Requests

AGENCY: Department of Education.

SUMMARY: The Leader, Information Management Group, Office of the Chief Information Officer, invites comments on the proposed information collection requests as required by the Paperwork Reduction Act of 1995.

DATES: Interested persons are invited to submit comments on or before May 22, 2000.

SUPPLEMENTARY INFORMATION: Section 3506 of the Paperwork Reduction Act of 1995 (44 U.S.C. Chapter 35) requires that the Office of Management and Budget (OMB) provide interested Federal agencies and the public an early opportunity to comment on information collection requests. OMB may amend or waive the requirement for public consultation to the extent that public participation in the approval process would defeat the purpose of the information collection, violate State or Federal law, or substantially interfere with any agency's ability to perform its statutory obligations. The Leader, Information Management Group, Office of the Chief Information Officer, publishes that notice containing proposed information collection requests prior to submission of these requests to OMB. Each proposed information collection, grouped by office, contains the following: (1) Type of review requested, *e.g.* new, revision, extension, existing or reinstatement; (2) title; (3) summary of the collection; (4)

description of the need for, and proposed use of, the information; (5) respondents and frequency of collection; and (6) reporting and/or recordkeeping burden. OMB invites public comment.

The Department of Education is especially interested in public comment addressing the following issues: (1) Is this collection necessary to the proper functions of the Department? (2) Will this information be processed and used in a timely manner? (3) Is the estimate of burden accurate? (4) How might the Department enhance the quality, utility, and clarity of the information to be collected? and (5) How might the Department minimize the burden of this collection on the respondents, including through the use of information technology?

Dated: March 16, 2000.

William Burrow,

Leader, Information Management Group, Office of the Chief Information Officer.

Office of Student Financial Assistance Programs

Type of Review: Revision.

Title: Student Aid Internet Gateway (SAIG) Enrollment Document.

Frequency: On occasion.

Affected Public: Individuals or households; not-for-profit institutions; Federal, State, Local, or Tribal Government SEAs or LEAs.

Reporting and Recordkeeping Hour Burden: Responses: 4,660 Burden Hours: 2,151.

Abstract: The Student Aid Internet Gateway (SAIG) Enrollment Form will be used by postsecondary institutions, third-party, software providers, lenders, guaranty agencies, and state scholarship programs. This will allow participants to have electronic access, to recieve and transmit, view and update student financial aid data. The Department will use this information on the enrollment form to assign customers a Title IV WAN ID and associate Title IV services selected by the customer. Since the original clearance of this system last summer, Education has discovered a number of suggestions for improvements. We hope to receive your ideas in 50 days so that we can have the necessary time to properly evaluate them.

Requests for copies of the proposed information collection request may be accessed from *http://edicsweb.ed.gov,* or should be addressed to Vivian Reese, Department of Education, 400 Maryland Avenue, SW, Room 5624, Regional Office Building 3, Washington, DC 20202–4651. Requests may also be electronically mailed to the internet address OCIO__IMG__Issues@ed.gov or faxed to 202–708–9346. Please specify the complete title of the information collection when making your request.

Comments regarding burden and/or the collection activity requirements should be directed to Joseph Schubart at (202) 708–9266 or via his internet address Joe__Schubart@ed.gov. Individuals who use a telecommunications device for the deaf (TDD) may call the Federal Information Relay Service (FIRS) at 1–800–877–8339.

[FR Doc. 00–7052 Filed 3–21–00; 8:45 am]

BILLING CODE 4000–01–P

DEPARTMENT OF EDUCATION

Submission for OMB Review; Comment Request

AGENCY: Department of Education.

SUMMARY: The Leader, Information Management Group, Office of the Chief Information Officer invites comments on the submission for OMB review as required by the Paperwork Reduction Act of 1995.

DATES: Interested persons are invited to submit comments on or before April 21, 2000.

ADDRESSES: Written comments should be addressed to the Office of Information and Regulatory Affairs, Attention: Danny Werfel, Desk Officer, Department of Education, Office of Management and Budget, 725 17th Street, N.W., Room 10235, New Executive Office Building, Washington, DC 20503 or should be electronically mailed to the internet address DWERFEL@OMB.EOP.GOV.

SUPPLEMENTARY INFORMATION: Section 3506 of the Paperwork Reduction Act of 1995 (44 U.S.C. Chapter 35) requires that the Office of Management and Budget (OMB) provide interested Federal agencies and the public an early opportunity to comment on information collection requests. OMB may amend or waive the requirement for public consultation to the extent that public participation in the approval process would defeat the purpose of the information collection, violate State or Federal law, or substantially interfere with any agency's ability to perform its statutory obligations. The Leader, Information Management Group, Office of the Chief Information Officer, publishes that notice containing proposed information collection requests prior to submission of these requests to OMB. Each proposed information collection, grouped by office, contains the following: (1) Type of review requested, *e.g.* new, revision, extension, existing or reinstatement; (2) title; (3) summary of the collection; (4) description of the need for, and proposed use of, the information; (5) respondents and frequency of collection; and (6) reporting and/or Recordkeeping burden. OMB invites public comment.

Dated: March 16, 2000.

William Burrow,

Leader, Information Management Group, Office of the Chief Information Officer.

Office of Vocational and Adult Education

Type of Review: New.

Title: Carl D. Perkins Vocational and Technical Education Act—Occupational and Employment Information State Grants (Section 118, PL 105–332).

Frequency: Annually.

Affected Public: State, Local, or Tribal Gov't, SEAs or LEAs; Individuals or households; Not-for-profit institutions.

Reporting and Recordkeeping Hour Burden: Responses: 59 Burden Hours: 2,124.

Abstract: Section 118 of the Carl D. Perkins Vocational and Technical Education authorizes grants to designated entities in the States, the District of Columbia, and outlying areas to promote improved career and education decision-making by individuals.

This information collection is being submitted under the Streamlined Clearance Process for Discretionary Grant Information Collections (1890–0001). Therefore, the 30-day public comment period notice will be the only public comment notice published for this information collection.

Requests for copies of the proposed information collection request may be accessed from *http://edicsweb.ed.gov,* or should be addressed to Vivian Reese, Department of Education, 400 Maryland Avenue, SW, Room 5624, Regional Office Building 3, Washington, D.C. 20202–4651. Requests may also be electronically mailed to the internet address OCIO__IMG__Issues@ed.gov or faxed to 202–708–9346. Please specify the complete title of the information collection when making your request.

Comments regarding burden and/or the collection activity requirements should be directed to Sheila Carey at (202) 708–6287 or via her internet address Sheila__Carey@ed.gov. Individuals who use a telecommunications device for the deaf (TDD) may call the Federal Information

Relay Service (FIRS) at 1–800–877–8339.

[FR Doc. 00–7053 Filed 3–21–00; 8:45 am]

BILLING CODE 4000–01–P

DEPARTMENT OF ENERGY

Golden Field Office; Supplemental Announcement to the Broad Based Solicitation for Financial Assistance Applications Involving Research, Development and Demonstration for the Office of Energy Efficiency and Renewable Energy; Feasibility Studies of Potential Applications of Renewable Energy Technologies at Tribal Colleges and Universities

AGENCY: U.S. Department of Energy.

ACTION: Supplemental Announcement 07 to the Broad Based Solicitation for Financial Assistance Applications DE–PS36–00GO10482.

SUMMARY: The U.S. Department of Energy (DOE), pursuant to the DOE Financial Assistance Rules, 10 CFR 600.8, is announcing its intention to solicit applications for Feasibility Studies of Potential Applications of Renewable Energy Technologies at Tribal Colleges and Universities. Financial assistance awards issued under this Supplemental Announcement will be cooperative agreements.

DATES: The solicitation will be issued on or about March 21, 1999.

ADDRESSES: Copies of the Solicitation once issued, can be obtained from the Golden Field Office Home page at http://www.eren.doe.gov/golden/solicitations.html. DOE will issue written copies of the solicitation upon request.

SUPPLEMENTARY INFORMATION: Under this Supplemental Announcement, DOE is soliciting Applications from tribal colleges and universities to conduct feasibility and planning studies for the development and installation of renewable energy technology hardware on or adjacent to their campuses, and integrated with educational programs and science curricula. Eligible technologies include: photovoltaics (PV), wind, biomass power, hydro, concentrating solar power, solar thermal systems (*i.e.,* active or passive solar technologies for space or water heating, or power generation technologies), geothermal electricity generation, geothermal resources for direct heating applications, and other renewable hybrid systems. Applications may include, but are not limited to, the use of renewable power for direct electrical generation, building uses, water pumping, or other grid connected or off-grid power systems. Successful applications should demonstrate the potential for replicability, as well as the educational, economic, and environmental benefits.

DOE will only consider applications from tribal colleges and universities as the prime applicant. A letter of commitment from an authorized representative (preferably the President) of the tribal college or university, as well as from each major participant is required as a part of the application (see Section I.C. Technical Volume Structure).

The overall objective of this program is the installation of renewable energy technologies at tribal colleges and universities. A secondary objective is the development and implementation of educational programs, with an emphasis on experiential teaching at the tribal colleges and universities to educate students and their communities on the use and benefits of these technologies. The program is planned for two phases. This initial solicitation (Phase I) is to support feasibility studies conducted by tribal colleges and universities and their selected partners and subcontractors to determine the most appropriate renewable energy technologies to be implemented and how it will be integrated with an educational program. Phase II will focus on the renewable energy hardware installation and implementation of the related educational program. It is anticipated that Phase II implementation will begin in FY 2001, if funding is appropriated. At the end of Phase I, an additional selection process will be used to determine eventual Phase II awards. Only Phase I recipients will be eligible to compete for 2 to 8 Phase II awards. All Phase I recipients will be required to submit a feasibility study report, including findings.

Awards under this Supplemental Announcement will be Cooperative Agreements, with a term of twelve months for the Phase I feasibility study. Subject to funding availability, the total DOE funding available for all Phase I studies under this Supplemental Announcement will be approximately $700,000. DOE anticipates selecting 5 to 12 applications for award under this Supplemental Announcement. As part of the Phase I deliverables, and subject to availability of FY 2001 funds, each Phase I recipient may submit an application for Phase II (FY 2001) funding.

No minimum cost share is required in order to be considered for award under this Phase I solicitation.

Solicitation Number DE–PS36–00GO10482, in conjunction with this Supplemental Announcement 07, will include complete information on the program including technical aspects, funding, application preparation instructions, application evaluation criteria, and other factors that will be considered when selecting projects for funding. Issuance of the solicitation is planned for March 21, 2000. Questions should be submitted in writing to: Ruth E. Adams, DOE Golden Field Office, 1617 Cole Boulevard, Golden, CO 80401–3393; transmitted via facsimile to Ruth E. Adams at (303) 275–4788; or electronically to *ruth__adams@nrel.gov.* The solicitation, once issued can be obtained from the Golden Field Office Home Page at http://www.eren.doe.gov/golden/solicitations.html. All responsible sources may submit an application and all timely applications will be considered.

FOR FURTHER INFORMATION CONTACT: Ruth E. Adams, Contracting Officer, at 303–275–4722, e-mail ruth__adams@nrel.gov.

Issued in Golden, Colorado, on March 14, 2000.

Ruth E. Adams,

Contracting Officer.

[FR Doc. 00–7069 Filed 3–21–00; 8:45 am]

BILLING CODE 6450–01–P

DEPARTMENT OF ENERGY

Federal Energy Regulatory Commission

[Docket No. RP00–216–000]

Eastern Shore Natural Gas Company; Notice of Proposed Changes in FERC Gas Tariff

March 16, 2000.

Take notice that on March 13, 2000, Eastern Shore Natural Gas Company (ESNG) tendered for filing as part of its FERC Gas Tariff, Second Revised Volume No. 1, certain revised tariff sheets in the above captioned docket, with a proposed effective date of April 1, 2000.

ESNG states that the purpose of this instant filing is to track rate changes attributable to a storage service purchased from Transcontinental Gas Pipe Line Corporation (Transco) under its Rate Schedule GSS. The costs of the above referenced storage service comprise the rates and charges payable under ESNG's Rate Schedule GSS. This tracking filing is being made pursuant to Section 3 of ESNG's Rate Schedule GSS.

ESNG states that copies of the filing have been served upon its jurisdictional

customers and interested State Commissions.

Any person desiring to be heard or to protest said filing should file a motion to intervene or a protest with the Federal Energy Regulatory Commission, 888 First Street, NE., Washington, DC 20426, in accordance with Sections 385.214 or 385.211 of the Commission's Rules and Regulations. All such motions or protests must be filed in accordance with Section 154.210 of the Commission's Regulations. Protests will be considered by the Commission in determining the appropriate action to be taken, but will not serve to make protestants parties to the proceedings. Any person wishing to become a party must file a motion to intervene. Copies of this filing are on file with the Commission and are available for public inspection in the Public Reference Room. This filing may be viewed on the web at http://www.ferc.fed.us/online/rims.htm (call 202–208–2222 for assistance).

David P. Boergers,

Secretary.

[FR Doc. 00–7025 Filed 3–21–00; 8:45 am]

BILLING CODE 6717–01–M

DEPARTMENT OF ENERGY

Federal Energy Regulatory Commission

[Docket No. CP00–36–00]

Guardian Pipeline, L.L.C.; Notice of Site Visit

March 16, 2000

On March 29 and 30, 2000 the Commission's Office of Energy Projects (OEP) staff will conduct an inspection of the pipeline route proposed by Guardian Pipeline, L.L.C. (Guardian) for the Guardian Pipeline Project. The proposed route, crossing portions of Wisconsin and Illinois, will be inspected by helicopter. The aerial inspection will begin at Milwaukee's General Mitchell International Airport on the morning of March 29. If weather conditions preclude an overflight, the inspection will be conducted by automobile from a location to be determined. The inspection will continue along the route southward from Ixonia, Wisconsin to Joliet, Illinois. Representatives of Guardian will accompany the OEP staff.

All interested parties may attend, although those planning to attend must provide their own transportation.

For further information, please contact Paul McKee of the Commission's Office of External Affairs at (202) 208–1088.

David P. Boergers,

Secretary.

[FR Doc. 00–7032 Filed 3–21–00; 8:45 am]

BILLING CODE 6717–01–M

DEPARTMENT OF ENERGY

Federal Energy Regulatory Commission

[Docket No. RP99–434–002]

Gulf States Transmission Corporation; Notice of Compliance Filing

March 15, 2000.

Take notice that on March 10, 2000, Gulf States Transmission Corporation (Gulf States) tendered for filing certain revised tariff sheets for inclusion in Gulf States' FERC Gas Tariff, Original Volume No. 1.

Gulf Sates that it is filing these tariff sheets to comply with the Commission's February 22, 2000 Letter Order in the above-referenced docket (February 22 Letter Order). In accordance with the February 22 Letter Order, Gulf States requests that these tariff sheets be deemed effective August 1, 1999.

Any person desiring to protest this filing should file a protest with the Federal Energy Regulatory Commission, 888 First Street, NE, Washington, DC 20426, in accordance with Section 385.211 of the Commission's Rules and Regulations. All such protests must be filed as provided in Section 154.210 of the Commission's Regulations. Protests will be considered by the Commission in determining the appropriate action to be taken, but will not serve to make protestants parties to the proceedings. Copies of this filing are on file with the Commission and are available for public inspection in the Public Reference Room. This filing may be viewed on the web at http://www.ferc.fed.us/online/rims.htm (call 202–208–2222 for assistance).

Linwood A. Watson, Jr.,

Acting Secretary.

[FR Doc. 00–7023 Filed 3–21–00; 8:45 am]

BILLING CODE 6717–01–M

DEPARTMENT OF ENERGY

Federal Energy Regulatory Commission

[Docket No. RP96–320–029]

Koch Gateway Pipeline Company; Notice of Technical Conference

March 16, 2000.

In the Commission's order issued on March 1, 2000, (90 FERC ¶ 61,227 (2000)), the Commission directed that a technical conference be held to address issues raised by the filing.

Take notice that the technical conference will be held on Thursday April 6, 2000, at 10 am, in a room to be designated at the offices of the Federal Energy Regulatory Commission, 888 First Street, NE, Washington, DC 20426.

All interested parties and Staff are permitted to attend.

David P. Boergers,

Secretary.

[FR Doc. 00–7029 Filed 3–21–00; 8:45 am]

BILLING CODE 6717–01–M

DEPARTMENT OF ENERGY

Federal Energy Regulatory Commission

[Docket No. RP00–164–001]

Northern Natural Gas Company; Notice of Compliance Filing

March 16, 2000.

Take notice that on March 13, 2000 Northern Natural Gas company (Northern), tendered for filing to become part of its FERC Gas Tariff, Fifth Revised Volume No. 1, the following tariff sheets proposed to be effective April 13, 2000:

Substitute Third Revised Sheet No. 146

Northern states that the purpose of the filing is to comply with the Commission's February 10, 2000 Order Accepting and Suspending Tariff Sheet Subject to Refund and Conditions.

Northern further states that copies of the filing have been mailed to each of its customers and interested State Commissions.

Any person desiring to protest this filing should file a protest with the Federal Energy Regulatory Commission, 888 First Street, NE, Washington, DC 20426, in accordance with section 385.211 of the Commission's Rules and Regulations. All such protests must be filed in as provided in Section 154.210 of the Commission's Regulations. Protests will be considered by the Commission in determining the appropriate action to be taken, but will

not serve to make protestants parties to the proceedings. Copies of this filing are on file with the Commission and are available for public inspection in the Public Reference Room. This filing may be viewed on the web at http://www.ferc.fed.us/online/rims.htm (call 202–208–2222 for assistance).

David P. Boergers,

Secretary.

[FR Doc. 00–7027 Filed 3–21–00; 8:45 am]

BILLING CODE 6717–01–M

DEPARTMENT OF ENERGY

Federal Energy Regulatory Commission

Notice of Transfer of License and Soliciting Comments, Motions to Intervene, and Protests

March 16, 2000.

Take notice that the following application has been filed with the Commission and is available for public inspection:

a. *Application Type:* Transfer of License.

b. *Project No.:* 2056–018.

c. *Date Filed:* March 8, 2000.

d. *Applicants:* Northern States Power Company and Northern Power Corporation.

e. *Name and Location of Project:* The St. Anthony Falls Hydroelectric Project is on the Mississippi River within the City of Minneapolis in Hennepin County, Minnesota. The project does not occupy Federal or Tribal land.

f. *Filed Pursuant to:* Federal Power Act, 16 U.S.C. 791(a)–825(r)

g. *Applicant Contacts:* Mr. Earle O'Donnell, Dewey Ballantine LLP, 1775 Pennsylvania Ave., NW, Washington, DC 20006, (202) 429–2327; Mr. William J. Madden, Jr., Winston & Strawn, 1400 L Street, NW, Washington, DC 20005, (202) 371–5715; Mr. Scott M. Wilensky, Northern States Power Company, 414 Nicollet Mall, 5th Floor, Minneapolis, MN 55401–1993, e-mail: *scott.wilensky@nspco.com;* Mr. Mark H. Holmberg, Northern States Power Company, (612) 330–6568.

h. *FERC Contact:* Any questions on this notice should be addressed to James Hunter at (202) 219–2839, or e-mail address: james.hunter@ferc.fed.us.

i. *Deadline for filing comments and or motions:* April 11, 2000.

All documents (original and eight copies) should be filed with: David P. Boergers, Secretary, Federal Energy Regulatory Commission, 888 First Street, NE, Washington, DC 20426.

Please include the project number (P–2056–018) on any comments or motions filed.

j. Description of Proposal: The applicants propose a transfer of the license for the St. Anthony Falls Project from Northern States Power Company (NSP) to Northern Power Corporation, a wholly-owned subsidiary of NSP. The transfer is being sought in connection with the merger between NSP and New Century Energies, Inc.

The transfer application was filed within five years of the expiration of the license, which is the subject of a pending relicense application for Project No. 2056–016. In Hydroelectric Relicensing Regulations Under the Federal Power Act (54 Fed. Reg. 23,756; FERC Stats. and Regs., Regs. Preambles 1986–1990 30,854 at p. 31,437), the Commission declined to forbid all license transfers during the last five years of an existing license, and instead indicated that it would scrutinize all such transfer requests to determine if the transfer's primary purpose was to give the transferee an advantage in relicensing (id. at p. 31,438 n. 318). Substitution of Northern Power Corporation for NSP as the applicant in the relicensing proceeding will be publicly noticed and handled in a separate proceeding.

k. Locations of the application: A copy of the application is available for inspection and reproduction at the Commission's Public Reference Room, located at 888 First Street, NE, Room 2A, Washington, DC 20426, or by calling (202) 208–1371. The application may be viewed on the web at www.ferc.fed.us/online/rims.htm (Call (202) 208–2222 for assistance). A copy is also available for inspection and reproduction at the addresses in item g above.

l. Individuals desiring to be included on the Commission's mailing list should so indicate by writing to the Secretary of the Commission.

Comments, Protests, or Motions to Intervene—Anyone may submit comments, a protest, or a motion to intervene in accordance with the requirements of Rules of Practice and Procedure, 18 CFR 385.210, .211, .214. In determining the appropriate action to take, the Commission will consider all protests or other comments filed, but only those who file a motion to intervene in accordance with the Commission's Rules may become a party to the proceeding. Any comments, protests, or motions to intervene must be received on or before the specified comment date for the particular application.

Filing and Service of Responsive Documents—Any filings must bear in all capital letters the title ''COMMENTS'', ''RECOMMENDATIONS FOR TERMS AND CONDITIONS'', ''PROTEST'', or ''MOTION TO INTERVENE'', as applicable, and the Project Number of the particular application to which the filing refers. Any of the above-named documents must be filed by providing the original and the number of copies provided by the Commission's regulations to: The Secretary, Federal Energy Regulatory Commission, 888 First Street, N.E., Washington, D.C. 20426. A copy of any motion to intervene must also be served upon each representative of the Applicant specified in the particular application.

Agency Comments—Federal, state, and local agencies are invited to file comments on the described application. A copy of the application may be obtained by agencies directly from the Applicant. If an agency does not file comments within the time specified for filing comments, it will be presumed to have no comments. One copy of an agency's comments must also be sent to the Applicant's representatives.

David P. Boergers,

Secretary.

[FR Doc. 00–7031 Filed 3–21–00; 8:45 am]

BILLING CODE 6717–01–M

DEPARTMENT OF ENERGY

Federal Energy Regulatory Commission

[Project No. 203–031 and 11832–000]

Portland General Electric Company and the Confederated Tribes of the Warm Springs Reservation of Oregon; Notice of Meeting

March 16, 2000.

At the request of Portland General Electric Company and the Confederated Tribes of the Warm Springs Reservation of Oregon, the Commission's staff will hold a meeting on April 4, 2000, at 3:00 p.m. in room 62–26, 888 First Street NE, Washington, DC. The purpose of the meeting is to discuss issues arising from the pending Global Settlement between PGE and the Tribes to resolve the competitive proceeding.

Other interested parties wishing to attend and participate in the meeting are welcome. Questions on the meeting should be directed to Hector M. Perez on

(202) 219–2843, *hector.perez@ferc.fed.us.*

David P. Boergers,

Secretary.

[FR Doc. 00–7024 Filed 3–21–00; 8:45 am]

BILLING CODE 6717–01–M

DEPARTMENT OF ENERGY

Federal Energy Regulatory Commission

[Project Nos: 2942–005, 2931–002, 2941–002, 2932–003, and 2897–003—Maine Dundee, Gambo, Little Falls, Mallison Falls, and Saccarappa Projects]

S.D. Warren Company; Notice of Intent To Prepare an Environmental Impact Statement

March 16, 2000.

The Federal Energy Regulatory Commission (Commission) received applications for new licenses for the continued operation and maintenance of the existing Dundee Project, FERC No. 2942–005; Gambo Project, FERC No. 2931–002, Little Falls Project, FERC No. 2941–002; Mallison Falls Project, FERC No. 2932–003; and Saccarappa Project, FERC No. 2897–003, henceforth known as the Presumpscot River Projects, on January 22, 1999. The Presumpscot River Projects are located on the Presumpscot River, in Cumberland County, Maine and would have a combined installed capacity of 7.45 magawatts.

Following the public scoping process, the Commission staff determined that licensing of the Presumpscot River Projects could constitute a major federal action significantly affecting the quality of the human environment. Therefore the staff intends to prepare an Environmental Impact Statement (EIS) for the Presumpscot River Projects in accordance with the National Environmental Policy Act (NEPA).

The staff's EIS will objectively consider both site-specific and cumulative environmental impacts of the projects and reasonable alternatives, and will include economic and engineering analyses.

A draft EIS (DEIS) will be issued and circulated for review by all interested parties. All comments filed on the DEIS will be analyzed by the staff and considered in the final EIS (FEIS). The staff's conclusions and recommendations will then be presented for the consideration of the Commission in reaching its final licensing decisions.

This notice informs all interested individuals, organizations and agencies with environmental expertise and concerns, that: (1) The Commission staff has decided to prepare an EIS; (2) the scoping conducted on the Presumpscot River Projects for the Environmental Assessment (EA)—scoping meetings held August 25 and 26, 1999, in Windham, Maine, and comments filed with the Commission by September 26, 1999—still apply; and (3) additional comments for the Presumpscot River Projects that may result from the change from an EA to an EIS may be filed with the Secretary, Federal Energy Regulatory Commission, 888 First Street, NE., Washington, DC 20426, within 30 days from the date of this notice.

All written correspondence should clearly show the following caption on the first page:

Dundee Project, FERC No. 2942–0005; Little Falls Project, FERC No. 2941–002; Mallison Falls Project, FERC No. 2932–003; Gambo Prject, FERC No. 2931–002; and Saccarappa Project, FERC No. 2897–003

Intervenors—those on the Commission's service list for this proceeding (parties)—are reminded of the Commission's Rules of Practice and procedure, requiring parties filing documents with the Commission, to serve a copy of the document on each person whose name appears on the official service list.[1] Further, if a party or intervenor files comments or documents with the Commission relating to the merits of an issue that may affect the responsibilities of a particular resource agency, they must also serve a copy of the document on that resource agency.

Any questions regarding this notice may be directed to Bob Easton, Environmental Coordinator, at (202) 219–2782 or Robert.Easton@ferc.fed.us.

David P. Boergers,

Secretary.

[FR Doc. 00–7030 Filed 3–21–00; 8:45am]

BILLING CODE 6717–01–M

[1] The official service list can be obtained by calling the Office of the Secretary, Dockets Branch, at (202) 208–2020.

DEPARTMENT OF ENERGY

Federal Energy Regulatory Commission

[Docket No. EC00–62–000]

Statoil Energy Trading, Inc.; Statoil Energy Services, Inc. and Amerada Hess Corporation; Notice Shortening Answer Period

March 16, 2000.

On March 8, 2000, the Commission issued a Notice of Filing, published March 16, 2000 (65 FR 14268), in the above-captioned proceeding. By this notice, the date for filing interventions and protests is hereby shortened to and including March 29, 2000.

David P. Boergers,

Secretary.

[FR Doc. 00–7033 Filed 3–21–00; 8:45 am]

BILLING CODE 6717–01–M

DEPARTMENT OF ENERGY

Federal Energy Regulatory Commission

[Docket No. RP00–209–001]

Transcontinental Gas Pipe Line Corporation; Notice of Tariff Filing

March 16, 2000.

Take notice that on March 10, 2000 Transcontinental Gas Pipe Line Corporation (Transco) tendered for filing as part of its FERC Gas Tariff, Third Revised Volume No. 1, Substitute Thirteenth Revised Sheet No. 44. The proposed effective date of the enclosed tariff sheet is April 1, 2000.

Transco states that the purpose of the instant filing is to supplement Transco's Fuel Tracker Filing of March 1, 2000 (March 1 Filing), which inadvertently reflected an incorrect Deferred GRO Amount for March, 99 in Appendix B, Page 2, attached to the filing. Transco is submitting revised workpapers to correct the Deferred GRO Amount reflected in the March 1 Filing. The result of the revised Deferred GRO Amount is a reduction in the System Transportation fuel retention percentage in Zone 4 from 1.91% to 1.90%.

Transco states that is serving copies of the instant filing to its affected customers, State Commissions and other interested parties.

Any person desiring to protest this filing should file a protest with the Federal Energy Regulatory Commission, 888 First Street, NE, Washington, DC 20426, in accordance with Section 385.211 of the Commission's Rules and Regulations. All such protests must be

filed as provided in Section 154.210 of the Commission's Regulations. Protests will be considered by the Commission in determining the appropriate action to be taken, but will not serve to make protestants parties to the proceedings. Copies of this filings are on file with the Commission and are available for public inspection in the Public Reference Room. This filing may be viewed on the web at http://www.ferc.fed.us/online/rims.htm (call 202–208–2222 for assistance).

David P. Boergers,

Secretary.

[FR Doc. 00–7026 Filed 3–21–00; 8:45 am]

BILLING CODE 6717–01–M

DEPARTMENT OF ENERGY

Federal Energy Regulatory Commission

[Docket No. RP99–381–000]

Wyoming Interstate Company, Ltd.; Notice of Informal Settlement Conference

March 16, 2000.

Take notice that an informal settlement conference will be convened in this proceeding commencing at 10:00 a.m. on Thursday, March 23, 2000, at the offices of the Federal Energy Regulatory Commission, 888 First Street, NE, Washington, DC 20426, for the purposes of exploring the possible settlement of the above-referenced docket.

Any party, as defined by 18 CFR 385.102(c), or any participant as defined by 18 CFR 385.102(b), is invited to attend. Persons wishing to become a party must move to intervene and receive intervenor status pursuant to the Commission's regulations (18 CFR 385.214).

For additional information, please contact Arnold H. Meltz at (202) 208–2161, or Michael D. Cotleur at (202) 208–1076.

David P. Boergers,

Secretary.

[FR Doc. 00–7028 Filed 3–21–00; 8:45 am]

BILLING CODE 6717–01–M

DEPARTMENT OF ENERGY

Federal Energy Regulatory Commission

[Docket No. EG00–89–000, et al.]

Louisiana Generating LLC, et al.; Electric Rate and Corporate Regulation Filings

March 15, 2000.

Take notice that the following filings have been made with the Commission:

1. Louisiana Generating LLC

[Docket No. EG00–89–000]

Take notice that on March 15, 2000, Louisiana Generating LLC filed with the Federal Energy Regulatory Commission an amendment to its application for determination of exempt wholesale generator status, which was filed on February 3, 2000 in the above-referenced proceeding.

Comment date: March 27, 2000, in accordance with Standard Paragraph E at the end of this notice. The commission will limit its consideration of comments to those that concern the adequacy or accuracy of the application.

2. South Eastern Generating Corporation

[Docket No. EG00–111–000]

Take notice that on March 7, 2000, South Eastern Generating Corporation (South Eastern) filed an amendment to their Application for Determination of Exempt Wholesale Generator Status filed with the Federal Energy Regulatory Commission (Commission) on March 3, 2000.

Comment date: March 29, 2000, in accordance with Standard Paragraph E at the end of this notice. The Commission will limit its consideration of comments to those that concern the adequacy or accuracy of the application.

3. South Carolina Electric & Gas Company, SCANA Energy Marketing, Inc.

[Docket Nos. ER96–1085–005 and ER96–1086–016]

Take notice that on March 9, 2000, South Carolina Electric & Gas Company and SCANA Energy Marketing, Inc., tendered for filing an updated market analysis in connection with their market-based rate authority.

Comment date: March 30, 2000, in accordance with Standard Paragraph E at the end of this notice.

4. Oceanside Energy, Inc.

[Docket No. ER97–181–007]

Take notice that on March 6, 2000, Oceanside Energy, Inc. filed a quarterly report for information only.

5. ECONnergy Energy Co., Inc.

[Docket Nos. ER98–2553–005, ER98–2553–006 and ER98–2553–007]

Take notice that on March 3, 2000, the above-mentioned power marketer filed quarterly reports with the Commission in the above-mentioned proceedings for information only.

6. Calvert Cliffs, Inc.

[Docket No. ES00–20–000]

Take notice that on March 10, 2000, Calvert Cliffs, Inc. (Applicant) submitted an application pursuant to Section 204 of the Federal Power Act. Applicant seeks authorization to: (a) Assume up to $47 million of tax exempt debt, (b) issue up to $600 million of unsecured promissory notes, (c) issue 5,000 shares of common stock, (d) execute an intercompany credit agreement and note of up to $100 million, and (e) execute a master demand note of up to $150 million.

Applicant also requests a waiver of the Commission's competitive bidding and negotiated placement requirements of 18 CFR 34.2.

Comment date: April 5, 2000, in accordance with Standard Paragraph E at the end of this notice.

7. Constellation Generation, Inc.

[Docket No. ES00–21–000]

Take notice that on March 10, 2000, Constellation Generation, Inc. (Applicant) submitted an application pursuant to Section 204 of the Federal Power Act. Applicant seeks authorization to: (a) Assume up to $232 million of tax exempt debt, (b) issue up to $550 million of unsecured promissory notes, (c) issue 5,000 shares of common stock, and (d) execute a master demand note of up to $150 million.

Applicant also requests a waiver of the Commission's competitive bidding and negotiated placement requirements of 18 CFR 34.2.

Comment date: April 5, 2000, in accordance with Standard Paragraph E at the end of this notice.

8. Central Maine Power Company

[Docket No. ER00–605–001]

Take notice that on March 8, 2000, Central Maine Power Company (CMP), tendered for filing the ''First Amendment to Hydro Quebec Entitlement Agreement'' (First Amendment), in compliance with the letter order dated February 23, 2000 (Letter Order), in Central Maine Power Company, Docket No. ER00–605–000, by the Commission's Office of Markets, Tariffs and Rates. The First Amendment deletes from the Hydro Quebec

Entitlement Agreement, dated November 1, 1999, Subsections a, c and d of Section 15.17, as directed by the Letter Order.

Comment date: March 29, 2000, in accordance with Standard Paragraph E at the end of this notice.

9. ISO New England Inc.

[Docket No. ER00–749–001]

Take notice that on March 10, 2000, ISO New England Inc., tendered for filing a notice of compliance regarding the confirmation of Revisions to New England Power Pool (NEPOOL) Market Rule 15 and Appendix 15–A by the NEPOOL Participants Committee.

Copies of said filing have been served upon each person designated on the official service list compiled by the Secretary in this proceeding.

Comment date: March 31, 2000, in accordance with Standard Paragraph E at the end of this notice.

10. Central Maine Power Company

[Docket No. ER00–982–001]

Take notice that on March 8, 2000, Central Maine Power Company (CMP), tendered for filing revised page 171 of CMP's Open Access Transmission Tariff (Revised Page 171) in compliance with Central Maine Power Company, 90 FERC ¶61,214 (2000) (February 28th Order). The February 28th Order directed CMP to remove revisions to its Open Access Transmission Tariff (OATT) that provide for recovery from unbundled retail customers for local distribution and retail stranded costs. Accordingly, the Revised Page 171 removes such revisions from exception number 7 of CMP's OATT.

Comment date: March 29, 2000, in accordance with Standard Paragraph E at the end of this notice.

11. Central Maine Power Company

[Docket No. ER00–1638–001]

Take notice that on March 9, 2000, Central Maine Power Company (CMP), tendered for filing an executed Interconnection Agreement (IA) with Boralex Athens Energy Inc., (Boralex). This IA supersedes the unexecuted version of the IA that CMP filed with FERC on February 17, 2000.

Among other changes made to reflect the final agreement of the parties, the executed version of the IA has been modified to correct a typographical error as to the dates when it will be effective. Consistent with the actual data upon which service to Boralex commenced, CMP requests that the IA become effective on January 18, 2000.

Copies of this filing have been served upon the Maine Public Utilities Commission and Boralex.

Comment date: March 30, 2000, in accordance with Standard Paragraph E at the end of this notice.

12. North American Electric Reliability Council

[Docket No. ER00–1666–000]

Take notice that on March 10, 2000, the North American Electric Reliability Council (NERC) tendered for filing in this docket a blacklined version of the proposed revisions to NERC's Transmission Loading Relief Procedures.

Comment date: March 31, 2000, in accordance with Standard Paragraph E at the end of this notice.

13. New England Power Company

[Docket No. ER00–1698–000]

Take notice that on March 10, 2000, New England Power Company amended its February 25, 2000, filing in this proceeding.

Comment date: March 31, 2000, in accordance with Standard Paragraph E at the end of this notice.

14. Allegheny Energy Service Corporation, on behalf of Monongahela Power Company, The Potomac Edison Company, and West Penn Power Company (Allegheny Power)

[Docket No. ER00–1859–000]

Take notice that on March 10, 2000, Allegheny Energy Service Corporation on behalf of Monongahela Power Company, The Potomac Edison Company and West Penn Power Company (Allegheny Power), tendered for filing Notices of Cancellation for Sonat Power Marketing Inc. and Sonat Power Marketing L.P., a customer under Allegheny Power's Open Access Transmission Service Tariff.

Copies of the filing have been provided to the Public Utilities Commission of Ohio, the Pennsylvania Public Utility Commission, the Maryland Public Service Commission, the Virginia State Corporation Commission, and the West Virginia Public Service Commission.

Comment date: March 31, 2000, in accordance with Standard Paragraph E at the end of this notice.

15. Allegheny Energy Service Corporation, on Behalf of Monongahela Power Company, The Potomac Edison Company, and West Penn Power Company (Allegheny Power)

[Docket No. ER00–1860–000]

Take notice that on March 13, 2000, Allegheny Energy Service Corporation on behalf of Monongahela Power Company, The Potomac Edison Company and West Penn Power Company (Allegheny Power), tendered for filing Supplement No. 73 to add Cargill-Alliant, LLC to Allegheny Power's Open Access Transmission Service Tariff which has been accepted for filing by the Federal Energy Regulatory Commission in Docket No. ER96–58–000.

The proposed effective date under the Service Agreements is March 10, 2000 or a date ordered by the Commission.

Copies of the filing have been provided to the Public Utilities Commission of Ohio, the Pennsylvania Public Utility Commission, the Maryland Public Service Commission, the Virginia State Corporation Commission, and the West Virginia Public Service Commission.

Comment date: April 3, 2000, in accordance with Standard Paragraph E at the end of this notice.

16. Allegheny Energy Service Corporation, on Behalf of Monongahela Power Company, The Potomac Edison Company, and West Penn Power Company (Allegheny Power)

[Docket No. ER00–1861–000]

Take notice that on March 13, 2000, Allegheny Energy Service Corporation on behalf of Monongahela Power Company, The Potomac Edison Company and West Penn Power Company (Allegheny Power), tendered for filing Supplement No. 72 to add Allegheny Energy Supply Company, LLC to Allegheny Power's Open Access Transmission Service Tariff which has been accepted for filing by the Federal Energy Regulatory Commission in Docket No. ER96–58–000.

The proposed effective date under the Service Agreements is March 10, 2000, or a date ordered by the Commission.

Copies of the filing have been provided to the Public Utilities Commission of Ohio, the Pennsylvania Public Utility Commission, the Maryland Public Service Commission, the Virginia State Corporation Commission, and the West Virginia Public Service Commission.

Comment date: April 3, 2000, in accordance with Standard Paragraph E at the end of this notice.

17. Maine Public Service Company

[Docket No. ER00–1862–000]

Take notice that on March 13, 2000, Maine Public Service Company (Maine Public), tendered for filing an executed Service Agreement for Network Integration Transmission Service under Maine Public's open access transmission tariff with Eastern Maine Electric Cooperative, Inc.

Comment date: April 3, 2000, in accordance with Standard Paragraph E at the end of this notice.

Standard Paragraphs

E. Any person desiring to be heard or to protest such filing should file a motion to intervene or protest with the Federal Energy Regulatory Commission, 888 First Street, NE, Washington, DC 20426, in accordance with Rules 211 and 214 of the Commission's Rules of Practice and Procedure (18 CFR 385.211 and 385.214). All such motions or protests should be filed on or before the comment date. Protests will be considered by the Commission in determining the appropriate action to be taken, but will not serve to make protestants parties to the proceeding. Any person wishing to become a party must file a motion to intervene. Copies of these filings are on file with the Commission and are available for public inspection. This filing may also be viewed on the Internet at http://www.ferc.fed.us/online/rims.htm (call 202–208–2222 for assistance).

David P. Boergers,

Secretary.

[FR Doc. 00–7064 Filed 3–21–00; 8:45 am]

BILLING CODE 6717–01–P

DEPARTMENT OF ENERGY

Federal Energy Regulatory Commission

[Docket No. EG00–27–000, et al.]

North Hartland, LLC, *et al.;* Electric Rate and Corporate Regulation Filings

March 14, 2000.

Take notice that the following filings have been made with the Commission:

1. AmerGen Energy Company, L.L.C.

[Docket No. EG00–27–000]

Take notice that on March 9, 2000, AmerGen Energy Company, L.L.C., submitted a supplement to its application for exempt wholesale generator status.

Comment date: April 4, 2000, in accordance with Standard Paragraph E at the end of this notice. The Commission will limit its consideration of comments to those that concern the adequacy or accuracy of the application.

2. Panda Oneta Power, L.P.

[Docket No. EG00–114–000]

Take notice that on March 10, 2000, Panda Oneta Power, L.P. (Panda Oneta), with its principal offices at 4100 Spring Valley Road, Suite 1001, Dallas, Texas 75244, filed with the Federal Energy Regulatory Commission, an application for determination of exempt wholesale generator status pursuant to Section 32 of the Public Utility Holding Company Act of 1935, as amended, and Part 365 of the Commission's regulations.

Panda Oneta is a Delaware limited partnership, which will construct, own and operate a nominal 1000 MW natural gas-fired generating facility within the region governed by the Southwest Power Pool and sell electricity at wholesale.

Comment date: April 4, 2000, in accordance with Standard Paragraph E at the end of this notice. The Commission will limit its consideration of comments to those that concern the adequacy or accuracy of the application.

3. Northern Maine Independent System Administrator, Inc.

[Docket No. EL00–51–000]

Take notice that on March 8, 2000, Northern Maine Independent System Administrator, Inc. (Northern Maine ISA) tendered for filing with the Commission a Request for Partial Waiver of the Requirements Part 45 of the Commission Regulations.

Comment date: April 7, 2000, in accordance with Standard Paragraph E at the end of this notice.

4. Little Bay Power Corporation

[Docket No. ER00–1843–000]

Take notice that on March 9, 2000, Little Bay Power Corporation filed a quarterly report for the quarter ending December 31, 1999.

Comment date: April 3, 2000, in accordance with Standard Paragraph E at the end of this notice.

5. Lamar Power Partners, LP

[Docket No. ER00–1844–000]

Take notice that on March 9, 2000, Lamar Power Partners, LP (Lamar), tendered for filing pursuant to Rules 204 and 205 an application for waivers and blanket approvals under various regulations of the Commission and for an order accepting its FERC Electric Rates Schedule No. 1, to be effective May 8, 2000, for wholesale sales to customers located outside of the ERCOT region of Texas, and to accept the rates thereunder as just and reasonable under Section 205(a) of the Federal Power Act, 16 U.S.C. § 824d(a). Lamar is a limited partnership that proposes to engage in the wholesale sale of electric power in the state of Texas and is headquartered in Florida.

Comment date: March 30, 2000, in accordance with Standard Paragraph E at the end of this notice.

6. Citizens Power Sales

[Docket No. ER00–1845–000]

Take notice that on March 9, 2000, Citizens Power Sales filed a Notice of Succession. Effective March 1, 2000, Citizens Power Sales converted from a general partnership to a limited liability company and changed its name to Citizens Power Sales LLC.

Comment date: March 30, 2000, in accordance with Standard Paragraph E at the end of this notice.

7. Jersey Central Power & Light Company; Metropolitan Edison Company and Pennsylvania Electric Company

[Docket No. ER00–1848–000]

Take notice that on March 10, 2000, Jersey Central Power & Light Company, Metropolitan Edison Company and Pennsylvania Electric Company (d/b/a GPU Energy), filed an executed Service Agreement between GPU Energy and Public Service Electric and Gas Company (PSE&G), dated March 6, 2000. This Service Agreement specifies that PSE&G has agreed to the rates, terms and conditions of GPU Energy's Market-Based Sales Tariff (Sales Tariff) designated as FERC Electric Rate Schedule, Second Revised Volume No. 5. The Sales Tariff allows GPU Energy and PSE&G to enter into separately scheduled transactions under which GPU Energy will make available for sale, surplus capacity and/or energy.

GPU Energy requests a waiver of the Commission's notice requirements for good cause shown and an effective date of March 6, 2000 for the Service Agreement.

GPU Energy has served copies of the filing on regulatory agencies in New Jersey and Pennsylvania.

Comment date: March 31, 2000, in accordance with Standard Paragraph E at the end of this notice.

8. PJM Interconnection, L.L.C.

[Docket No. ER00–1849–000]

Take notice that on March 10, 2000, PJM Interconnection, L.L.C. (PJM), tendered for filing revised pages to the PJM Open Access Transmission Tariff and the Amended and Restated Operating Agreement of PJM Interconnection, L.L.C. setting forth procedures for a two-settlement system.

PJM requests an effective date of May 31, 2000.

Copies of this filing were served upon all PJM Members and the state electric regulatory commissions in the PJM Control Area.

Comment date: March 31, 2000, in accordance with Standard Paragraph E at the end of this notice.

9. Jersey Central Power & Light Company, Metropolitan Edison Company, Pennsylvania Electric Company

[Docket No. ER00–1850–000]

Take notice that on March 10, 2000, Jersey Central Power & Light Company, Metropolitan Edison Company and Pennsylvania Electric Company (doing business and hereinafter referred to as ''GPU Energy'') submitted for filing revised Schedule 9.02 to the GPU Power Pooling Agreement. Schedule 9.02 has been revised to reflect the fact the GPU Energy has sold the Three Mile Island Unit No. 1 Nuclear Generating Station to AmerGen Energy Company, LLC.

Comment date: March 31, 2000, in accordance with Standard Paragraph E at the end of this notice.

10. Pleasant Hill Marketing, LLC

[Docket No. ER00–1851–000]

Take notice that on March 10, 2000, Pleasant Hill Marketing, LLC, an indirect wholly owned subsidiary of UtiliCorp United Inc., tendered for filing a rate schedule to engage in sales at market-based rates. Pleasant Hill included in its filing a proposed code of conduct.

Comment date: March 31, 2000, in accordance with Standard Paragraph E at the end of this notice.

11. Southern Indiana Gas and Electric Company

[Docket No. ER00–1852–000]

Take notice that on March 10, 2000, Southern Indiana Gas and Electric Company (SIGECO) tendered for filing the following agreement concerning the provision of electric service to British Columbia Power Exchange Corporation, as a umbrella service agreement under its market-based Wholesale Power Sales Tariff:

Wholesale Energy Service Agreement dated February 24, 2000, by and between Southern Indiana Gas and Electric Company and British Columbia Power Exchange Corporation.

Comment date: March 31, 2000, in accordance with Standard Paragraph E at the end of this notice.

12. Cleco Utility Group Inc.

[Docket No. ER00–1854–000]

Take notice that on March 10, 2000, Cleco Utility Group Inc., tendered for filing an Interconnection and Operating Agreement between itself and Acadia Power Partners, LLC in connection with Acadia Power Partner LLC's proposed construction of a new generating facility in Acadia Parish, Louisiana.

Comment date: March 31, 2000, in accordance with Standard Paragraph E at the end of this notice.

13. Metropolitan Edison Company

[Docket No. ER00–1855–000]

Take notice that on March 10, 2000, Metropolitan Edison Company (d/b/a GPU Energy) tendered for filing a Generation Facility Transmission Interconnection Agreement between GPU Energy and Calpine Construction Finance Company, L.P.

GPU Energy requests an effective date of March 11, 2000, for the agreement.

Comment date: March 31, 2000, in accordance with Standard Paragraph E at the end of this notice.

14. PECO Energy Company

[Docket No. ER00–1856–000]

Take notice that on March 10, 2000, PECO Energy Company (PECO), tendered for filing under Section 205 of the Federal Power Act, 16 U.S.C. S 792 *et seq.*, an Agreement dated February 29, 2000 with Delmarva Power & Light Company (DELMARVA) under PECO's FERC Electric Tariff Original Volume No. 1 (Tariff).

PECO requests an effective date of March 1, 2000, for the Agreement.

PECO states that copies of this filing have been supplied to Delaware Power & Light Company and to the Pennsylvania Public Utility Commission.

Comment date: March 31, 2000, in accordance with Standard Paragraph E at the end of this notice.

15. Split Rock Energy LLC and Minnesota Power, Inc.

[Docket No. ER00–1857–000]

Take notice that on March 10, 2000, Split Rock Energy LLC (Split Rock), filed an application for an order authorizing Split Rock to make wholesales sales of electric power at market-based rates. Concurrent with Split Rock's filing, Minnesota Power, Inc. (MP), tendered for filing proposed revisions to its Wholesale Coordination Service Tariff No. 2 (WCS–2 Tariff), designated as FERC Electric Tariff Original Volume No. 5. MP's revisions revise the WCS–2 Tariff to provide that MP may make sales of power under the WCS–2 Tariff, to Split Rock at market-based rates.

Comment date: March 31, 2000, in accordance with Standard Paragraph E at the end of this notice.

16. New Hampshire Electric Cooperative, Inc.

[Docket No. ER00–1858–000]

Take notice that on March 10, 2000, New Hampshire Electric Cooperative, Inc. (NHEC), petitioned the Commission for acceptance of NHEC Rate Schedule; the granting of certain blanket approvals, including the authority to sell electricity at market-based rates; and the waiver of certain Commission Regulations.

NHEC intends to engage in wholesale electric power and energy sales as a marketer. NHEC is a consumer-owned electric generation and distribution cooperative that provides electric service to 65,000 customers in New Hampshire.

Comment date: March 31, 2000, in accordance with Standard Paragraph E at the end of this notice.

Standard Paragraphs

E. Any person desiring to be heard or to protest such filing should file a motion to intervene or protest with the Federal Energy Regulatory Commission, 888 First Street, N.E., Washington, D.C. 20426, in accordance with Rules 211 and 214 of the Commission's Rules of Practice and Procedure (18 CFR 385.211 and 385.214). All such motions or protests should be filed on or before the comment date. Protests will be considered by the Commission in determining the appropriate action to be taken, but will not serve to make protestants parties to the proceeding. Any person wishing to become a party must file a motion to intervene. Copies of these filings are on file with the Commission and are available for public inspection. This filing may also be viewed on the Internet at http://www.ferc.fed.us/ online/rims.htm (call 202–208–2222 for assistance).

David P. Boergers,

Secretary.

[FR Doc. 00–7063 Filed 3–21–00; 8:45 am]

BILLING CODE 6717–01–P

ENVIRONMENTAL PROTECTION AGENCY

[OPP–00650; FRL–6499–6]

Notice of Availability of Regional Environmental Stewardship Program Grants

AGENCY: Environmental Protection Agency (EPA).

ACTION: Notice.

SUMMARY: EPA is announcing the availability of approximately $498 thousand in fiscal year 2000 grant/cooperative agreement funds under section 20 of the Federal Insecticide, Fungicide, and Rodenticide Act (FIFRA) as amended, (the Act), for grants to States and federally recognized Native

American Tribes for research, public education, training, monitoring, demonstrations, and studies. For convenience, the term ''State'' in this notice refers to all eligible applicants.

DATES: In order to be considered for funding during the FY 00 award cycle, all applications must be received by the appropriate EPA regional office on or before May 22, 2000. EPA will make its award decisions by June 30, 2000.

FOR FURTHER INFORMATION CONTACT: Your EPA Regional Pesticide Environmental Stewardship Program Coordinator. Contact names for the coordinators are listed under Unit V of this document.

SUPPLEMENTARY INFORMATION:

I. General Information

Does this Action Apply to Me?

This action is directed to the public in general. This action may, however, be of interest to eligible applicants for purposes of funding under this grant program to include the 50 States, the District of Columbia, the U.S. Virgin Islands, the Commonwealth of Puerto Rico, any territory or possession of the United States, any agency or instrumentality of a State including State universities, and all Federally recognized Native American tribes. For further information contact the Regional PESP coordinator listed under Unit V.

II. Availability of FY'00 Funds

With this publication, EPA is announcing the availability of approximately $498 thousand in grant/cooperative agreement funds for FY'00. The Agency has delegated grant making authority to the EPA Regional Offices. Regional offices are responsible for the solicitation of interest, the screening of proposals, and the selection of projects. Grant guidance will be provided to all applicants along with any supplementary information the Regions may wish to provide. All applicants must address the criteria listed under Unit IV B. of this document. In addition, applicants may be required to meet any supplemental Regional criteria. Interested applicants should contact their Regional PESP coordinator listed under Unit V of this document for more information.

III. Eligible Applicants

In accordance with the Act ''. . . Federal agencies, universities, or others as may be necessary to carry out the purposes of the act, . . .'' are eligible to receive a grant; however, because of restrictions associated with the funds appropriated for this program, the eligible applicants are limited. Eligible applicants for purposes of funding under this grant program include the 50 States, the District of Columbia, the U.S. Virgin Islands, the Commonwealth of Puerto Rico, any territory or possession of the United States, any agency or instrumentality of a State including State universities, and all federally recognized Native American Tribes. For convenience, the term ''State'' in this notice refers to all eligible applicants. Local governments, private universities, private nonprofit entities, private businesses, and individuals are not eligible. The organizations excluded from applying directly are encouraged to work with eligible applicants in developing proposals that include them as participants in the projects. Contact your EPA Regional PESP coordinator for assistance in identifying and contacting eligible applicants. EPA strongly encourages this type of cooperative arrangement.

IV. Activities and Criteria

A. General

The goal of PESP is to reduce the risks associated with pesticide use in agricultural and non-agricultural settings in the United States. The purpose of the grant program is to support the establishment and expansion of Integrated Pest Management (IPM) as a tool to be used to accomplish the goals of PESP. Projects that address the risk reduction goals of the PESP, pesticide pollution prevention, Integrated Pest Management (IPM), IPM in Schools, children's health issues related to pesticides, or those research methods for documenting the trends toward the adoption of IPM or the reduction of risks associated with pesticide use will receive priority consideration. Other projects will be considered as they complement these goals through public education, training monitoring, demonstrations and studies and other activities. EPA specifically seeks to build State and local IPM capacities or to evaluate the economic feasibility of new IPM approaches at the state level (i.e., innovative approaches and methodologies that use application or other strategies to reduce the risks associated with pesticide use). Funds awarded under the grant program should be sued to support the goal of reducing the risk/use of pesticides. State projects might focus on, for example:

- Researching the effectiveness of multimedia communication activities for, including but not limited to: promoting local IPM activities, providing technical assistance to pesticide users; collecting and analyzing data to target outreach and technical assistance opportunities; developing measures to determine and document progress in pollution prevention; and identifying regulatory and non-regulatory barriers or incentives to pollution prevention.
- Researching methods for establishing IPM as an environmental management priority, establishing prevention goals, developing strategies to meet those goals, and integrating the ethic within both governmental and non-governmental institutions of the State or region.
- Initiating research or other projects that test and support: innovative techniques for reducing pesticide risk or using pesticides in a way to reduce risk, innovative application techniques to reduce worker and environmental exposure, various approaches and methodologies to measure progress towards meeting the goal of 75% implementation of IPM by the year 2000.

A list of projects funded in FY'99 may be obtained from the internet at URL http://www.epa.gov/oppbppd1/PESP/grants.htm or from the Regional PESP coordinator listed under Unit V. of this document.

B. Criteria

Proposals will be evaluated based on the following criteria:

1. Qualifications and experience of the applicant relative to the proposed project.

- Does the applicant demonstrate experience in the field of the proposed activity?
- Does the applicant have the properly trained staff, facilities, or infrastructure in place to conduct the project?

2. Consistency of applicant's proposed project with the risk reduction goals of the PESP.

3. Provision for a quantitative or qualitative evaluation of the project's success at achieving the stated goals.

- Is the project designed in such a way that it is possible to measure and document the results quantitatively and qualitatively?
- Does the applicant identify the method that will be used to measure and document the project's results quantitatively and qualitatively?
- Will the project assess or suggest a means for measuring progress in reducing risk/use of pesticides in the United States?

4. Likelihood the project can be replicated to benefit other communities or the product may have broad utility to a widespread audience. Can this project, taking into account typical staff and financial restraints, be replicated by

similar organizations in different locations to address the same or similar problem?

C. Program Management

Awards of FY'00 funds will be managed through the EPA Regional Offices.

D. Contacts

A generic request for proposal may be available on EPA's PESP web site on or before March 22, 2000, at http://www.epa.gov/oppbppd1/PESP/grants.htm. Interested applicants must also contact the appropriate EPA Regional PESP coordinator listed under Unit V of this document to obtain specific instructions, regional criteria, and guidance for submitting proposals.

V. Regional Pesticide Environmental Stewardship Program Contacts

Region I: (Connecticut, Maine, Massachusetts, New Hampshire, Rhode Island, Vermont), Robert Koethe, (CPT), 1 Congress St., Boston, MA 02203, Telephone: (617) 918–1535, koethe.robert@epa.gov.

Region II: (New Jersey, New York, Puerto Rico, Virgin Islands), Audrey Moore, (MS–500), 2890 Woodbridge Ave., Edison, NJ 08837, Telephone: (732) 906–6809, moore.audrey@epa.gov.

Region III: (Delaware, Maryland, Pennsylvania, Virginia, West Virginia, District of Columbia), Racine Davis, (3WC32), 1650 Arch St., Philadelphia, PA 19103, Telephone: (215) 814–5797, davis.racine@epa.gov.

Region IV: (Alabama, Florida, Georgia, Kentucky, Mississippi, North Carolina, South Carolina, Tennessee), Lora Lee Schroeder, 12th Floor, Atlanta Federal Center, 61 Forsyth St., SW., Atlanta, GA 30303–3104, Telephone: (404) 562–9015, schroeder.lora@epa.gov.

Region V: (Illinois, Indiana, Michigan, Minnesota, Ohio, Wisconsin), David Macarus, (DT–8J), 77 West Jackson Blvd., Chicago, IL 60604, Telephone: (312) 353–5814, macarus.david@epa.gov.

Region VI: (Arkansas, Louisiana, New Mexico, Oklahoma, Texas), Jerry Collins, (6PD–P), 1445 Ross Ave., Suite 1200, Dallas, TX 75202, Telephone: (214) 665–7562, collins.jerry@epa.gov.

Region VII: (Iowa, Kansas, Missouri, Nebraska), Jamie Green, 901 N. 5th St., Kansas City, KS 66101, Telephone: (913) 551–7139, green.jamie@epa.gov.

Region VIII: (Colorado, Montana, North Dakota, South Dakota, Utah, Wyoming), Debbie Kovacs, (8P2–TX), 999 18th St., Suite 500, Denver, CO 80202–2466, Telephone: (303) 312–6417, kovacs.debbie@epa.gov.

Region IX: (Arizona, California, Hawaii, Nevada, American Samoa, Guam), Roccena Lawatch, (CMD4–3), 75 Hawthorne St., San Francisco, CA 94105, Telephone: (415) 744–1068, lawatch.roccena@epa.gov.

Region X: (Alaska, Idaho, Oregon, Washington), Karl Arne, Sandy Halstead (ECO–084), 1200 Sixth Ave., Seattle, WA 98101, Telephone: (206) 553–2576, arne.karl@epa.gov halstead.sandra@epa.gov.

List of Subjects

Environmental protection.

Dated: March 16, 2000.

Phillip Hutton,

Acting Director, Biopesticides and Pollution Prevention Division, Office of Pesticide Programs.

[FR Doc. 00–7127 Filed 3–21–00; 8:45 am]

BILLING CODE 6560–50–F

ENVIRONMENTAL PROTECTION AGENCY

[FRL–6563–7]

Availability of ''Award of Grants for the Special Projects and Programs Authorized by this Agency's FY 2000 Appropriations Act''

AGENCY: Environmental Protection Agency (EPA).

ACTION: Notice of document availability.

SUMMARY: EPA is announcing availability of a memorandum entitled ''Award of Grants for the Special Projects and Programs Authorized by this Agency's FY 2000 Appropriations Act.'' This memorandum, dated March 14, 2000, provides information and guidelines on how EPA will award and administer grants for the special projects and programs identified in the State and Tribal Assistance Grants (STAG) account of the Agency's fiscal year (FY) 2000 Appropriations Act (Public Law 106–74). The STAG account provides budget authority for funding 200 identified water, wastewater and groundwater infrastructure projects, as well as budget authority for funding the United States-Mexico Border program and the Alaska Rural and Native Villages program. Each grant recipient will receive a copy of this document from EPA.

ADDRESSES: See **SUPPLEMENTARY INFORMATION** section for electronic access of the guidance memorandum.

FOR FURTHER INFORMATION CONTACT: Valerie G. Martin, (202) 260-7259 or martin.valerie@epamail.epa.gov.

SUPPLEMENTARY INFORMATION: The subject memorandum may be viewed and downloaded from EPA's homepage, http://www.epa.gov/owm/mab/owm0315.pdf.

Dated: March 16, 2000.

Michael B. Cook,

Director, Office of Wastewater Management.

[FR Doc. 00–7124 Filed 3–21–00; 8:45 am]

BILLING CODE 6560–50–P

ENVIRONMENTAL PROTECTION AGENCY

[OPP–00593A; FRL–6484–5]

Pesticides; Policy Issues Related to the Food Quality Protection Act

AGENCY: Environmental Protection Agency (EPA).

ACTION: Notice of availability.

SUMMARY: EPA is announcing the availability of the revised version of the pesticide science policy document entitled ''Choosing a Percentile of Acute Dietary Exposure as a Threshold of Regulatory Concern.'' This notice is the fifteenth in a series concerning science policy documents related to Food Quality Protection Act and developed through the Tolerance Reassessment Advisory Committee.

FOR FURTHER INFORMATION CONTACT: Kathleen Martin, Environmental Protection Agency (7509C), 401 M St., SW., Washington, DC 20460; telephone number: (703) 308–2857; fax number: (703) 305–5147; e-mail address: martin.kathleen@epa.gov.

SUPPLEMENTARY INFORMATION:

I. General Information

A. Does this Action Apply to Me?

You may be potentially affected by this action if you manufacture or formulate pesticides. Potentially affected categories and entities may include, but are not limited to:

Categories	NAICS	Examples of potentially affected entities
Pesticide producers	32532	Pesticide manufacturers Pesticide formulators

This listing is not intended to be exhaustive, but rather provides a guide for readers regarding entities likely to be affected by this action. Other types of entities not listed could also be affected. The North American Industrial Classification System (NAICS) codes

have been provided to assist you and others in determining whether or not this action affects certain entities. If you have any questions regarding the applicability of this action to a particular entity, consult the person listed under **FOR FURTHER INFORMATION CONTACT.**

B. How Can I Get Additional Information, Including Copies of This Document or Other Related Documents?

1. *Electronically.* You may obtain electronic copies of this document, the revised science policy document, and certain other related documents that might be available from the Office of Pesticide Programs' Home Page at http://www.epa.gov/pesticides/. On the Office of Pesticide Programs' Home Page select ''FQPA'' and then look up the entry for this document under ''Science Policies.'' You can also go directly to the listings at the EPA Home page at http://www.epa.gov. On the Home Page select ''Laws and Regulations'' and then look up the entry to this document under ''**Federal Register**--Environmental Documents.'' You can go directly to the **Federal Register** listings at http://www.epa.gov/fedrgstr/. The document entitled ''Responses to Public Comments on the Office of Pesticide Program's Draft Science Policy Document'' is available on EPA's Home Page with the **Federal Register** document at the above web site.

2. *Fax on demand.* You may request a faxed copy of the revised science policy document, as well as supporting information, by using a faxphone to call (202) 401–0527. Select item 6046 for the document entitled ''Choosing a Percentile of Acute Dietary Exposure as a Threshold of Regulatory Concern.'' You may also follow the automated menu.

3. *In person.* The Agency has established an official record for this action under docket control number OPP–00593A. In addition, the documents referenced in the framework notice, which published in the **Federal Register** on October 29, 1998 (63 FR 58038) (FRL–6041–5) have also been inserted in the docket under docket control number OPP–00557. The official record consists of the documents specifically referenced in this action, and other information related to this action, including any information claimed as Confidential Business Information (CBI). This official record includes the documents that are physically located in the docket, as well as the documents that are referenced in those documents. The public version of the official record does not include any information claimed as CBI. The public version of the official record, which includes printed, paper versions of any electronic comments submitted during an applicable comment period is available for inspection in the Public Information and Records Integrity Branch (PIRIB), Rm. 119, Crystal Mall #2, 1921 Jefferson Davis Highway, Arlington, VA, from 8:30 a.m. to 4 p.m., Monday through Friday, excluding legal holidays. The PIRIB telephone number is (703) 305–5805.

II. Background for the Tolerance Reassessment Advisory Committee (TRAC)

On August 3, 1996, the Food Quality Protection Act of 1996 (FQPA) was signed into law. Effective upon signature, the FQPA significantly amended the Federal Insecticide, Fungicide, and Rodenticide Act (FIFRA) and the Federal Food, Drug, and Cosmetic Act (FFDCA). Among other changes, FQPA established a stringent health-based standard (''a reasonable certainty of no harm'') for pesticide residues in foods to assure protection from unacceptable pesticide exposure; provided heightened health protections for infants and children from pesticide risks; required expedited review of new, safer pesticides; created incentives for the development and maintenance of effective crop protection tools for farmers; required reassessment of existing tolerances over a 10-year period; and required periodic re-evaluation of pesticide registrations and tolerances to ensure that scientific data supporting pesticide registrations will remain up-to-date in the future.

Subsequently, the Agency established the Food Safety Advisory Committee (FSAC) as a subcommittee of the National Advisory Council for Environmental Policy and Technology (NACEPT) to assist in soliciting input from stakeholders and to provide input to EPA on some of the broad policy choices facing the Agency and on strategic direction for the Office of Pesticide Programs. The Agency has used the interim approaches developed through discussions with FSAC to make regulatory decisions that met FQPA's standard, but that could be revisited if additional information became available or as the science evolved. As EPA's approach to implementing the scientific provisions of FQPA has evolved, the Agency has sought independent review and public participation, often through presentation of many of the science policy issues to the FIFRA Scientific Advisory Panel (SAP), a group of independent, outside experts who provide peer review and scientific advice to the Office of Pesticide Programs (OPP).

In addition, as directed by Vice President Albert Gore, EPA has been working with the U.S. Department of Agriculture (USDA) and another subcommittee of NACEPT, the TRAC, chaired by the EPA Deputy Administrator and the USDA Deputy Secretary, to address FQPA issues and implementation. TRAC comprises more than 50 representatives of affected user, producer, consumer, public health, environmental, states and other interested groups. The TRAC has met seven times as a full committee from May 27, 1998 through October 21, 1999.

The Agency has been working with the TRAC to ensure that its science policies, risk assessments of individual pesticides, and process for decision making are transparent and open to public participation. An important product of these consultations with TRAC is the development of a framework for addressing key science policy issues. The Agency decided that the FQPA implementation process and related policies would benefit from initiating notice and comment on the major science policy issues.

The TRAC identified nine science policy issue areas it believes were key to implementation of FQPA and tolerance reassessment. The framework calls for EPA to provide one or more documents for comment on each of the nine issues by announcing their availability in the **Federal Register**. In accordance with the framework described in a separate notice published in the **Federal Register** of October 29, 1998 (63 FR 58038), EPA is announcing through the **Federal Register** the availability of a series of draft documents concerning nine science policy issues identified by the TRAC related to the implementation of FQPA. After receiving and reviewing comments from the public and others, EPA is also issuing revised science policy documents which reflect changes made in response to comments. In addition to comments received in response to these **Federal Register** notices, EPA will consider comments received during the TRAC meetings. Each of these issues is evolving and in a different stage of refinement. Accordingly, as the issues are further refined by EPA in consultation with USDA and others, they may also be presented to the SAP.

III. Summary of Revised Science Policy Guidance Document

EPA is responsible for regulating the nature and amount of pesticide residues in food under FFDCA. FFDCA section 408 authorizes EPA to set a tolerance or

an exemption from the requirement of a tolerance if the Agency determines that the residues would be ''safe.'' The Agency performs various types of risk assessments to evaluate the safety of pesticides in food, including analyses to determine the nature and the amounts of pesticides that people might be exposed to over a single day. This science policy document discusses how EPA generally applies the statutory safety standard to acute dietary risk assessments as to pesticide residues in foods.

The Environmental Protection Agency's Office of Pesticide Programs previously announced that, on an interim basis, it intended to use the 99.9th percentile of the distribution of estimated acute dietary food exposures for calculating a threshold of concern when probabilistic assessment techniques are used to model the distribution. OPP stated that it would compare this percentile of estimated exposure to the Population Adjusted Dose (PAD), a value that reflects an amount of a pesticide to which a person may safely be exposed in one day. The Agency published a notice in the **Federal Register** on April 7, 1999 (64 FR 16962) (FRL–6074–7), citing the availability of an interim policy and requested public comment so that the views of all interested parties would be considered (US EPA, 1999a).

Based in part on the comments received, this science policy document was revised and is now being issued in its revised format. This revised document explains OPP's policy and details some of the various concerns that have been raised, additional associated public health-related issues, as well as OPP's plans for further evaluation and implementation. This policy has broad applicability to many pesticides and a potentially significant impact on the assessment of these pesticides.

OPP's current approach with respect to assessing and regulating the food uses of pesticides, when using a probabilistic method of estimating acute dietary exposure, is as follows:

If the 99.9th percentile of acute exposure from food, as estimated by probabilistic (e.g., Monte Carlo) analysis, is equal to or less than the acute Population Adjusted Dose (aPAD) for the pesticide, then OPP would generally consider its threshold of concern in applying that the safety standard of FFDCA section 408(B)(2)(A) not to be exceeded with respect to acute risk from food. However, if the analysis indicates that estimated exposure at the 99.9th percentile exceeds the PAD, OPP would generally conduct a sensitivity analysis to determine to what extent the estimated exposures at the high-end percentiles may be affected by unusually high food consumption or residue values. To the extent that one or a few values from the input data sets seem to ''drive'' the exposure estimates at the high end of exposure, OPP would consider whether these values are representative and should be used as the primary basis for regulatory decision making. In either scenario, EPA would consider submissions by interested parties that question the appropriateness of the use of the 99.9th percentile in calculating the threshold of concern for the particular risk assessment in question or question its use generally.

It is important to note here that the above position refers to the 99.9th percentile of exposure and not consumption. The 99.9th percentile of exposure represents the joining of each individual's consumption data set with randomly selected residue values from the residue data set. The consumption values associated with the 99.9th percentile of exposure do not necessarily represent the 99.9th percentile of consumption since it is both the selected consumption value and residue concentration which is responsible for determining exposure.

At this time, OPP's current policy is used only with daily exposures to a single chemical through the food pathway only. Estimates of exposure through drinking water and residential uses are not sufficiently developed to warrant inclusion in a probabilistic assessment. Establishing the threshold of concern for the food pathway using the 99.9th percentile of exposure is considered to be a ''first step'' toward regulation of exposures on an aggregate, and then cumulative, basis.

OPP recognizes that different types of risk assessments will generally be needed for aggregate and cumulative evaluations and that these assessments might also be associated with different regulatory thresholds. Although OPP is moving toward regulating on the basis of probabilistic aggregate and cumulative exposure assessments, a decision has not yet been made regarding how the appropriate threshold of concern should be calculated for these types of assessments. When exposures through drinking water and residential uses are sufficiently refined to be incorporated into probabilistic evaluations, they will be aggregated and assessed, and may use a different population percentile.

Section I of this provides an overview of OPP's present practice for acute dietary risk assessment for residues in food. It describes the statutory, regulatory, and policy framework for this policy, as well as prior reviews and comments. In addition, this section provides background information on dietary risk assessment in general and explains how the previous system (DRES—Dietary Risk Evaluation System) and the current system (DEEM—Dietary Exposure Evaluation Model) work, as well as what input data sources are used and how.

Section II addresses some of the specific issues and concerns raised about using exposures at the estimated 99.9th percentile in calculating the threshold of concern. One issue is whether the nature of the data bases available (i.e., robustness, adequacy, etc.) should preclude the use of the estimated 99.9th percentile for regulatory purposes since some consider the uncertainties associated with this population percentile to be too great. Examples of data used are USDA's food consumption survey data, registrant crop field trials, USDA Pesticide Data Program (PDP) data, FDA monitoring data, market basket surveys, etc. Other issues include the treatment of data ''outliers,'' representativeness and adequacy of the data bases, and the impact of Agency default values on exposure estimates. Concerns, therefore, exist about whether the estimates of the 99.9th percentile of exposure are sufficiently representative of actual exposure to be meaningful. This science policy document summarizes these concerns and how OPP has addressed them.

Section III addresses the issue of protectiveness of the estimated 99.9th percentile of exposure with respect to the general public health. One view is that using the estimated 99.9th percentile of exposure is insufficiently conservative because very large numbers of people could be exposed every day to pesticide intakes which are estimated to exceed the Agency's ''level of concern.'' This section also explores the contrary view that the policy is over-protective because of the conservative assumptions used in the estimation methods and the retention of potentially unrepresentative values in the data base. The section discusses as well the view that, whether it over-estimates or under-estimates actual exposure, the estimated 99.9th percentile of exposure is simply too uncertain to be used in risk management decisions.

Section III also explains that OPP weighs a number of factors in considering which percentile to use: The size of the exposed population and the proportion that might receive daily doses above the benchmark of safety,

the aPAD; the level of confidence OPP has in its exposure estimates; and the extent to which such estimates may overstate potential exposure because they incorporate conservative assumptions or rely on atypical and unrealistic data. Further, to the extent understood, OPP considers by how much individual exposures would be estimated to exceed the aPAD.

Section IV briefly addresses the issues associated with exploratory analysis conducted by OPP with the DEEM software and the 99.9th percentile issue. Further details and specifics of this analysis are provided in the associated response to public comments.

Section V provides a list of the documents referenced in this science policy document.

The Appendix, entitled ''Primer on Interpretation of Exposure Distribution Curves,'' is a ''plain English'' guide to Monte Carlo analysis and interpretation of its results.

IV. Issues Raised in Comments

EPA published a draft version of the document described in Unit III. under **SUPPLEMENTARY INFORMATION** on April 7, 1999 (64 FR 16962) and comments were filed in docket control number OPP–00593. The public comment period ended on June 7, 1999. The Agency received comments from numerous different organizations. All comments were considered by the Agency in revising the document.

Many of the comments were similar in content, and pertained to general issues concerning the proposed policy or specific sections within the draft document. The comments addressed a broad range of issues and, in many instances, provided no general consensus. The Agency grouped the comments according to the nature of the comment and the issue or section of the document which they addressed. For the substantive comments that follow, contrasting opinions are presented, along with EPA's response. The full text of the Agency's response to the comments is available as described in Units I.B.1. and I.B.2. under **SUPPLEMENTARY INFORMATION.**

V. Policies Not Rules

The revised science policy document discussed in this notice is intended to provide guidance to EPA personnel and decision-makers, and to the public. As a guidance document and not a rule, the policy in this guidance is not binding on either EPA or any outside parties. Although this guidance provides a starting point for EPA risk assessments, EPA will depart from its policy where the facts or circumstances warrant. In such cases, EPA will explain why a different course was taken. Similarly, outside parties remain free to assert that a policy is not appropriate for a specific pesticide or that the circumstances surrounding a specific risk assessment demonstrate that a policy should be abandoned.

List of Subjects

Environmental protection, Administrative practice and procedure, Agricultural commodities, Pesticides and pests.

Dated: March 16, 2000

Susan H. Wayland,

Acting Assistant Administrator for Prevention, Pesticides and Toxic Substances.

[FR Doc. 00–7126 Filed 3–21–00; 8:45 am]

BILLING CODE 6560–50–F

FEDERAL DEPOSIT INSURANCE CORPORATION

Agency Information Collection Activities: Proposed Collection; Comment Request

AGENCY: Federal Deposit Insurance Corporation (FDIC).

ACTION: Notice and request for comment.

SUMMARY: The FDIC, as part of its continuing effort to reduce paperwork and respondent burden, invites the general public and other Federal agencies to take this opportunity to comment on proposed and/or continuing information collections, as required by the Paperwork Reduction Act of 1995 (44 U.S.C. chapter 35). Currently, the FDIC is soliciting comments concerning the following collections of information titled: (1) Fair Housing Lending Monitoring System; (2) Application for Federal Deposit Insurance; (3) Foreign Banks and (4) Foreign Branch Report of Condition.

DATES: Comments must be submitted on or before May 22, 2000.

ADDRESSES: Interested parties are invited to submit written comments to Tamara R. Manly, Management Analyst (Regulatory Analysis), (202) 898–7453, Office of the Executive Secretary, Room F–4058, Attention: Comments/OES, Federal Deposit Insurance Corporation, 550 17th Street N.W., Washington, D.C. 20429. All comments should refer to the OMB control number. Comments may be hand-delivered to the guard station at the rear of the 17th Street Building (located on F Street), on business days between 7 a.m. and 5 p.m. [FAX number (202) 898–3838; Internet address: comments @ fdic.gov].

A copy of the comments may also be submitted to the OMB desk officer for the FDIC: Alexander Hunt, Office of Information and Regulatory Affairs, Office of Management and Budget, New Executive Office Building, Room 3208, Washington, D.C. 20503.

FOR FURTHER INFORMATION CONTACT: Tamara R. Manly, at the address identified above.

SUPPLEMENTARY INFORMATION: Proposal to Renew the Following Currently Approved Collections of Information

1. *Title:* Fair Housing Lending Monitoring System.
OMB Number: 3064–0046.
Frequency of Response: Annually.
Affected Public: Insured state nonmember banks.
Estimated Number of Respondents: 2,000.
Estimated Number of Loan Applications: 1,000,000.
Estimated Time per Response: 5 minutes.
Estimated Total Annual Burden: 83,333 hours.
General Description of Collection: In order to permit the FDIC to detect discrimination in residential mortgage lending, certain insured state nonmember banks are required by FDIC regulation 12 CFR 338 to maintain various data on home loan applicants.

2. *Title:* Application for Federal Deposit Insurance.
OMB Number: 3064–0001.
Form Number: 6200/05.
Frequency of Response: On occasion.
Affected Public: All financial institutions.
Estimated Number of Respondents: 200.
Estimated Time per Response: 250 hours.
Estimated Total Annual Burden: 50,000 hours.
General Description of Collection: The Federal Deposit Insurance Act requires a proposed bank or savings institution to apply to the FDIC in order to obtain federal deposit insurance. The form provides the information necessary for the FDIC to make a determination.

3. *Title:* Foreign Banks.
OMB Number: 3064–0114.
Frequency of Response: On occasion.
Affected Public: Insured branches of foreign banks in the United States.
Estimated Number of Respondents: 418.
Estimated Time per Response: ranges from ¼ hour to 120 hours.
Estimated Total Annual Burden: 4,398 hours.
General Description of Collection: The collection of information consists of (a) applications to operate as a noninsured state-licensed branch of a foreign bank; (b) applications from an insured state-

licensed branch of a foreign bank to conduct activities which are not permissible for a federally-licensed branch; (c) internal recordkeeping by insured branches of foreign banks; and (d) reporting requirements relating to an insured branch's pledge of assets to the FDIC.

4. *Title:* Foreign Branch Report of Condition.

OMB Number: 3064–0011.

Form Number: FFIEC 030.

Frequency of Response: Quarterly/Annually.

Affected Public: Foreign branches of insured banks.

Estimated Number of Respondents: 41.

Estimated Time per Response: 3.25 hours.

Estimated Total Annual Burden: 146 hours.

General Description of Collection: The Foreign Branch Report of Condition, Form FFIEC 030, contains asset and liability information along with data on certain off balance sheet items for foreign branches of insured banks.

Request for Comment

Comments are invited on: (a) Whether the collection of information is necessary for the proper performance of the FDIC's functions, including whether the information has practical utility; (b) the accuracy of the estimates of the burden of the information collection, including the validity of the methodology and assumptions used; (c) ways to enhance the quality, utility, and clarity of the information to be collected; and (d) ways to minimize the burden of the information collection on respondents, including through the use of automated collection techniques or other forms of information technology.

At the end of the comment period, the comments and recommendations received will be analyzed to determine the extent to which the collection should be modified prior to submission to OMB for review and approval. Comments submitted in response to this notice also will be summarized or included in the FDIC's requests to OMB for renewal of this collection. All comments will become a matter of public record.

Federal Deposit Insurance Corporation.

Dated at Washington, DC, this 16th day of March, 2000.

Robert E. Feldman,

Executive Secretary.

[FR Doc. 00–7042 Filed 3–21–00; 8:45 am]

BILLING CODE 6714–01–P

FEDERAL MARITIME COMMISSION

Ocean Transportation Intermediary License

Applicant

Notice is hereby given that the following applicant has filed with the Federal Maritime Commission an application for license as a Non-Vessel Operating Common Carrier—Ocean Transportation Intermediary pursuant to section 19 of the Shipping Act of 1984 as amended (46 U.S.C. app. 1718 and 46 CFR part 515).

Persons knowing of any reason why the following applicant should not receive a license are requested to contact the Office of Transportation Intermediaries, Federal Maritime Commission, Washington, DC 20573.

Non-Vessel-Operating Common Carrier Ocean Transportation Intermediary Applicant

Global Total Logistics, LLC, 3885 Meadow Park Lane, Torrance, CA 90505, Officers: David Chiang, Manager (Qualifying Individual), Sumadi Kusuma, Manager.

Dated: March 17, 2000.

Bryant L. VanBrakle,

Secretary.

[FR Doc. 00–7096 Filed 3–21–00; 8:45 am]

BILLING CODE 6730–01–P

FEDERAL RESERVE SYSTEM

Formations of, Acquisitions by, and Mergers of Bank Holding Companies

The companies listed in this notice have applied to the Board for approval, pursuant to the Bank Holding Company Act of 1956 (12 U.S.C. 1841 et seq) (BHC Act), Regulation Y (12 CFR part 225), and all other applicable statutes and regulations to become a bank holding company and/or to acquire the assets or the ownership of, control of, or the power to vote shares of a bank or bank holding company and all of the banks and nonbanking companies owned by the bank holding company, including the companies listed below.

The applications listed below, as well as other related filings required by the Board, are available for immediate inspection at the Federal Reserve Bank indicated. The application also will be available for inspection at the offices of the Board of Governors. Interested persons may express their views in writing on the standards enumerated in the BHC Act (12 U.S.C. 1842(c)). If the proposal also involves the acquisition of a nonbanking company, the review also includes whether the acquisition of the nonbanking company complies with the standards in section 4 of the BHC Act (12 U.S.C. 1843). Unless otherwise noted, nonbanking activities will be conducted throughout the United States. Additional information on all bank holding companies may be obtained from the National Information Center website at www.ffiec.gov/nic/.

Unless otherwise noted, comments regarding each of these applications must be received at the Reserve Bank indicated or the offices of the Board of Governors not later than April 14, 2000.

A. Federal Reserve Bank of Dallas (W. Arthur Tribble, Vice President) 2200 North Pearl Street, Dallas, Texas 75201–2272:

1. Burton Bancshares, Inc., Burton, Texas, Burton Holdings, Inc., Wilmington, Delaware, and Burton Holdings, Inc., Burton, Texas; to become bank holding companies by acquiring 100 percent of the voting shares of Burton State Bank, Burton, Texas.

B. Federal Reserve Bank of San Francisco (Maria Villanueva, Consumer Regulation Group) 101 Market Street, San Francisco, California 94105–1579:

1. EarthBank Corporation, San Mateo, California; to become a bank holding company by acquiring 100 percent of the voting shares of Monument Bancshares, Inc., Poland, Ohio, and thereby indirectly acquire Monument National Bank, Ridgecrest, California.

Board of Governors of the Federal Reserve System, March 16, 2000.

Robert deV. Frierson,

Associate Secretary of the Board.

[FR Doc. 00–7016 Filed 3–21–00; 8:45 am]

BILLING CODE 6210–01–P

GENERAL ACCOUNTING OFFICE

Federal Accounting Standards Advisory Board

AGENCY: General Accounting Office.

ACTION: Notice of meeting on April 13–14, 2000.

Board Meeting Summary: Pursuant to section 10(a)(2) of the Federal Advisory Committee Act (Pub. L. No. 92–463), as amended, notice is hereby given that the Federal Accounting Standards Advisory Board will hold a meeting on Thursday, April 13, from 1 to 4 and Friday, April 14, from 9 to 3:30 p.m. room 7C13, the Elmer Staats Briefing Room, of the General Accounting Office building, 441 G St., NW, Washington, DC.

The purpose of the meeting is to:

- Approve procedures for Technical Bulletins

- Discuss the FASAB Technical Agenda
- Discuss Supplementary Stewardship reporting
- Review the draft Implementation Guide

Any interested person may attend the meeting as an observer. Board discussions and reviews are open to the public.

FOR FURTHER INFORMATION CONTACT: Wendy Comes, Executive Director, 441 G St., NW, Room 6814, Washington, DC 20548, or call (202) 512–7350.

Authority: Federal Advisory Committee Act. Pub. L. No. 92–463, Section 10(a)(2), 86 Stat. 770, 774 (1972) (current version at 5 U.S.C. app. section 10(a)(2) (1988); 41 CFR 101–6.1015 (1990).

Dated: March 17, 2000.

Wendy M. Comes,

Executive Director.

[FR Doc. 00–7129 Filed 3–21–00; 8:45 am]

BILLING CODE 1610–01–M

GENERAL SERVICES ADMINISTRATION

Notice of Second Public Scoping Meeting for an Environmental Impact Statement and the Announcement of Alternative Sites

AGENCY: General Services Administration, National Capital Region; Department of Transportation.

ACTION: Proposed lease acquisition of a new or renovated headquarters for the Department of Transportation in the Central Employment Area (CEA) of Washington, DC.

SUMMARY: The General Services Administration (GSA), which previously announced its intent to prepare an Environmental Impact Statement (EIS) for the lease acquisition of a new or renovated headquarters for the Department of Transportation (DOT) to be located in the CEA of Washington, DC, at this time announces its intent to conduct a second public scoping meeting to discuss the proposed action pursuant to Section 102(2)(C) of the National Environmental Policy Act of 1969 (NEPA), as implemented by the Council of Environmental Quality regulations (40 CFR Parts 1500–1508), Section 106 of the National Historic Preservation Act of 1966, as amended, and in accordance with the Environmental Policies and Procedures implemented by GSA.

Background Information

DOT seeks to update its facilities, maximize efficiency, and reorganize and consolidate its operations. To this end, Congress has authorized GSA, acting on behalf of DOT, to acquire up to 1.35 million rentable square feet of space under an operating lease for a term not to exceed twenty years. This procurement is designed to establish a competitive process to obtain a new or renovated headquarters for DOT.

The DOT's headquarters operations are currently housed primarily in two leased locations: the Nassif Building at 400 7th Street, SW, Washington, DC, and the Transpoint Building at 2100 2nd Street, SW, Washington, DC. In addition, DOT occupies smaller blocks of leased space in other buildings in Washington, DC. All of these locations are proposed to be consolidated into the new headquarters. DOT also utilizes FOB 10A as the headquarters for the Federal Aviation Administration, but these operations are not proposed as part of this consolidation.

DOT first occupied the Nassif Building under a 20-year lease that commenced on January 2, 1970. A 10-year renewal commenced April 1, 1990 and expires on March 31, 2000. The Transpoint Building was first occupied by DOT in 1973. The current lease expires in May 15th, 2003.

Consolidation in a new or renovated headquarters will produce significant operating efficiencies in support of DOT's mission. This procurement is the result of a three-year collaborative effort by the DOT, GSA, the Executive Branch, and Congress.

The lease acquisition for a DOT headquarters complex is being conducted in accordance with all applicable laws and regulations pertaining to GSA's acquisition of lease space. These laws and regulations include, but are not limited to, NEPA, the Competition in Contracting Act, the National Historic Preservation Act, the General Services Acquisition Regulations, and, where applicable, the Federal Acquisition Regulation. The Government is conducting this procurement as a negotiated, best value source selection. Under this approach, a panel of Government officials will select the proposal that satisfies all of the Government's minimum requirements as stated in the Solicitation For Offers (SFO), and presents the greatest overall value to the Government, considering price and technical factors stated in the SFO.

Public Scoping

GSA and DOT determined that a comprehensive EIS is the appropriate means of identifying the potential adverse impacts from this proposed Federal action. A Notice of Intent to prepare an EIS and conduct an initial public scoping meeting was issued on June 30, 1999. The initial public scoping meeting was held on July 29, 1999 to assist GSA in determining the significant issues related to this project prior to the submittal of offers. The subject of this notice is a second public scoping meeting that will be held to solicit input from agencies and the public relating to the alternative site locations that will be included in the EIS.

This second public scoping will be held at 7 pm on Tuesday, April 11, 2000, at the Ronald Reagan Building and International Trade Center. The meeting will be advertised in local and regional newspapers as the date of the meeting approaches. At the meeting, a short formal presentation will precede the request for public comments. GSA representatives will be available to receive comments from the public regarding issues of concern, including comments on the potential impacts of the proposed project, means of mitigating those impacts, and project alternatives. It is important that Federal, regional, state and local agencies, and interested individuals and groups take this opportunity to identify environmental concerns that should be addressed during the preparation of the Draft EIS. In the interest of available time, each speaker will be asked to limit oral comments to five (5) minutes. A document summarizing the written and oral comments received will be prepared and made publicly available.

Agencies and the general public are encouraged to provide written comments on the scoping issues in addition to, or in lieu of, presenting oral comments at the public meeting. Environmental review/scoping comments should clearly describe specific issues or topics that the community believes the EIS should address.

Written comments will be accepted through April 24, 2000. The comments received during the scoping process will be considered in preparing the Draft EIS. The public is encouraged to provide additional comments after the Draft EIS is released. GSA anticipates that the Draft EIS will be released in the Spring of 2000.

Topics for environmental analysis include the short-term impacts of construction and the long-term impacts of site operations and maintenance on land use, historic resources, visual resources, physical and biological resources, public transportation, traffic and parking, public services and utilities, and socio-economic conditions. The environmental analysis

will also address cumulative impacts associated with this and other future projects in the CEA of the District of Columbia.

Project Information

An informational packet regarding this project will be available for review at the April 11, 2000 public scoping meeting or upon request to the GSA contact identified below. The informational packet and other information regarding this project will also be made available on the Internet.

The five (5) action alternative under consideration by GSA as possible locations for the consolidated DOT headquarters complex include the following:

Alt. #1—801 New Jersey Avenue, NW

Alt. #2—400 7th Street, SW

Alt. #3—1200 Maryland Avenue, SW

Alt. #4—Southeast Federal Center Site, Option A

Alt. #5—Southeast Federal Center Site, Option B

TIME AND LOCATION OF MEETING: The public meeting will be held: At 7:00 p.m., Tuesday, April 11, 2000 at the Ronald Reagan Building and International Trade Center Horizon Ballroom, (Ground Level, 13½ Street Entrance), 13th Street and Pennsylvania Avenue, NW, Washington, DC 20004.

DATES: Written comments regarding environmental review of the proposed DOT headquarters project must be postmarked no later than April 24, 2000, to the following address: General Services Administration, Attn: Mr. John Simeon, Portfolio Development Division (WPC), 7th and D Streets, SW., Suite 2002, Washington, DC 20407.

FOR FURTHER INFORMATION PLEASE CONTACT: Mr. John Simeon, General Services Administration, (202) 260–9586.

Dated: March 17, 2000.

Anthony E. Costa,

Assistant Regional Administrator Public Buildings Service.

[FR Doc. 00–7059 Filed 3–21–00; 8:45 am]

BILLING CODE 6820–23–M

DEPARTMENT OF HEALTH AND HUMAN SERVICES

Administration for Children and Families

[Program Announcement No. ACYF–PA–HS–2000–5]

Fiscal Year 2000 Discretionary Announcement for the Head Start Fellow Program; Availability of Funds and Request for Applications

AGENCY: Administration on Children, Youth and Families, ACF, DHHS.

ACTION: Fiscal Year 2000 Discretionary Announcement for the Head Start Fellows Program; Availability of Funds and Request for Applications.

Statutory Authority 42 U.S.C. 9801, *et seq.*, The Head Start Act, as amended.

Catalog of Federal Domestic Assistance (CFDA): 93.600 Head Start Act as amended.

SUMMARY: The Administration for Children and Families, Administration on Children, Youth and Families announces the availability of $1 million in funds to design and implement the National Head Start Fellow Program. We are seeking a partner with whom to enter into a cooperative agreement. A cooperative agreement is a form of Federal financial assistance that allows substantial Federal involvement in the activities for which funds awarded.

Note: In order to satisfactorily compete under this announcement, it will be necessary for potential applicants to read the full announcement which is available through the Head Start Bureau's website: *www2.acf.dhhs.gov/programs/hsb/announce/index.htm.* Hard copies of the application may be obtained by writing or calling the ACYF Operations Center or sending an E-mail to: hsf@lcgnet.com.

DATES: The closing date and time for the receipt of applications is 5 p.m. (Eastern Time Zone) on May 22, 2000. Mailed or handcarried applications received after the closing date will be classified as late.

ADDRESSES: Mail applications to: ACYF Operations Center, Attention: Head Start Fellows Application, 1815 North Fort Myers Drive, Suite 300, Arlington, VA 22209 (1–800–351–2293). Prior to preparing and submitting an application, in order to satisfactorily compete under this announcement, it will be necessary for potential applicants to read the full announcement which is available through the Head Start Bureau's website*: www2.acf.dhhs.gov/programs/hsb/announce/index.htm*

FOR FURTHER INFORMATION CONTACT: ACYF Operations Center at: 1815 North Fort Myer Drive, Suite 300, Arlington, VA 22209 (1–800–351–2292) or Donnell Savage at: 330 C Street, SW., Washington, DC 20447 (202) 205–8420 *dsavage@acf.dhhs.gov*

Eligible Applicants

Universities, colleges, foundations, professional organizations, public and private non-profit and for-profit agencies and organizations.

SUPPLEMENTARY INFORMATION: The purpose of this announcement is to request applications for the design and implementation of a National Head Start Fellows Program as envisioned in the Head Start reauthorization of 1998. The purpose of this National Head Start Fellows Program is to identify individuals with outstanding leadership potential and to involve them in a high quality developmental experience which will provide them with a variety of perspectives and experiences to help them develop their potential as the next generation of leaders for the early childhood and family services field. The result of this initiative will be to improve the quality and effectiveness of Head Start and other early childhood development programs nationwide.

Federal Share of Project Costs: The maximum Federal share is to exceed $1 million for the first 12-month budget period and $1 million for each succeeding 12-month period.

Matching Requirements: Non-Federal match is not required.

Anticipated Number of Projects to be funded: It is anticipated that one project will be funded.

Evaluation Criteria

Applications received by the due date will be reviewed and scored competitively. Experts in the field, generally persons from outside the Federal government, will use the evaluation criteria listed below.

a. Organization Profiles (40 points)

The extent to which the applicant provides a vitae on the project director/principal investigator and key project staff including resumes (name, address, training, most relevant educational background and other qualifying experiences) and a short description of their responsibilities or contribution to the applicant's work plan. The extent to which the applicant's ability to effectively and efficiently administer a project like the one proposed is described. The extent to which the mission of the organization is described as it relates to leadership development within the early childhood and family service fields and how this project fits within that mission. Applicant provides

the assurance that the project director or another appropriate staff member will attend six meetings annually in Washington, D.C. to meet with federal staff to discuss issues related to the Fellows Program implementation.

b. Approach (20 points)

The extent to which the applicant outlines an acceptable plan of action pertaining to the scope of the project and details how the proposed work will be accomplished.

The extent to which the applicant describes the proposed approach and strategies that will be taken to design the program, to recruit potential participants, to support the implementation and maintenance of the Fellows Program and to evaluate the program's effectiveness.

The extent to which the applicant describes its understanding of the goals and purposes for the Fellows program and its relationship to developing leadership potential for the individuals in the field and for improving the quality of early childhood programs.

c. Objectives and Need for Assistance (15 points)

The extent to which the applicant identifies and documents any relevant economic, social, financial institutional or other problems requiring a solution; demonstrates the need for the assistance; and states the principal and subordinate objectives of the project. Supporting documentation or other testimonies from concerned interests other than the applicant on the need for assistance may be used.

If the proposed approach and strategies require the technical assistance of other colleges, universities, or nonprofit agencies, the proposal should include letters of commitment assuring their willingness to participate and indicating the roles they would play in the project.

d. Results or Benefits Expected (15 points)

The extent to which the applicant identifies the evaluation methodology that will be used to determine the specific and measurable results and benefits to be derived which are consistent with the objectives of the proposal, and indicates the anticipated contributions to policy, practice and/or theory.

e. Budget and Budget Justification (10 points)

The extent to which the project's costs are reasonable in view of the activities to be carried out and the anticipated outcomes. Provide a budget that delineates the project administration costs versus those expenses that will directly support the Fellows individually and as a group. The budget should include stipends to Fellows. The stipend should be tiered to accommodate a range of education and experience and would parallel the Federal General Schedule 12–14 pay range. Stipends should include funds to support fringe benefits. The average stipend and total amount of the $1 million of the budget that will be used for stipends for the Fellows must be delineated. It is anticipated that the major portion of the budget will be used for stipends and direct costs of the Fellows. The other expenses to support the participation of the Fellows should also be described and budgeted within the $1 million.

State Single Point of Contact (SPOC)

This program is covered under Executive Order 12372, ''Intergovernmental Review of Federal Programs,'' and 45 CFR Part 100, ''Intergovernmental Review of Department of Health and Human Services Program and Activities.'' Under the Order, States may design their own process for reviewing and commenting on proposed Federal assistance under covered programs.

Note: State territory participation in the intergovernmental review process does not signify applicant eligibility for financial assistance under a program. A potential applicant must meet the eligibility requirements of the program for which it is applying prior to submitting an application to its SPOC, if Applicable, or to ACF.

The following jurisdictions have elected not to participate in the Executive Order process: Alabama, Alaska, Colorado, Connecticut, Hawaii, Idaho, Kansas, Louisiana, Minnesota, Montana, Nebraska, New Jersey, New York, Ohio, Oklahoma, Oregon, Pennsylvania, South Dakota, Tennessee, Vermont, Virginia, Washington, American Samoa and Palau. Applicants from these jurisdictions or for projects administered by federally-recognized Indian Tribes need take no action in regard to E.O. 12372. Although the jurisdictions listed above no longer participate in the process, entities which have met the eligibility requirements of the program are still eligible to apply for a grant even if a State, Territory, Commonwealth, etc. does not have a SPOC. All remaining jurisdictions participate in the Executive Order process and have established SPOCs. Applicants from participating jurisdictions should contact their SPOC as soon as possible to alert them of the prospective applications and receive instructions.

Applicants must submit any required material to the SPOCs as soon as possible so that the program office can obtain and review SPOC comments as part of the award process. The applicant must submit all required materials, if any, to the SPOC and indicate the date of this submittal (or the date of contact if no submittal is required) on the Standard Form 424, item 16a.

Under 45 CFR 100.8(a)(2), a SPOC has 60 days from the application deadline to comment on proposed new or competing continuation awards.

SPOCs are encouraged to eliminate the submission of routine endorsements as official recommendations. Additionally, SPOCs are requested to clearly differentiate between mere advisory comments and those official State process recommendations which may trigger the ''accommodate or explain'' rule. A list of the Single State Point of Contacts for each State and Territory can be found on the following website: *http://www.whitehouse.gov/omb/grants/spoc.html*

When comments are submitted directly to ACF, they should be addressed to: William Wilson, Head Start Bureau, Office of Grants Management, 330 C. St. SW, Washington, DC 20447. ATTN: Head Start Fellows Program.

Reminder: In order to satisfactorily compete under this announcement, it will be necessary for potential applicants to read the full announcement which is available through the Head Start Bureau's website: *www2.acf.dhhs.gov/programs/hsb/announce/index.htm.* Mail applications to: ACYF Operations Center, Attention: Head Start Fellows Application, 1815 North Fort Myers Drive, Suite 300, Arlington, VA 22209 (1–800–351–2293).

Dated: March 15, 2000.

Patricia Montoya,

Commissioner, Administration on Children, Youth and Families.

[FR Doc. 00–7020 Filed 3–21–00; 8:45 am]

BILLING CODE 4184–01–M

DEPARTMENT OF HEALTH AND HUMAN SERVICES

Administration for Children and Families

Federal Allotments to State Developmental Disabilities Councils (DDC) and Protection and Advocacy (P&A) Formula Grant Programs for Fiscal Year 2001.

AGENCY: Administration on Developmental Disabilities (ADD), Administration for Children and Families, Department of Health and Human Services.

ACTION: Notification of Fiscal Year 2001 Federal Allotments to State Developmental Disabilities Councils and Protection and Advocacy Formula Grant Programs.

SUMMARY: This notice sets forth Fiscal Year (FY) 2001 individual allotments and percentages to States administering the State Developmental Disabilities Councils and Protection and Advocacy programs, pursuant to Section 125 and Section 142 of the Developmental Disabilities Assistance and Bill of Rights Act (Act). The allotment amounts are based upon the FY 2000 Budget Request and are contingent upon congressional appropriations for FY 2001. If Congress enacts and the President approves a different appropriation amount, the allotments will be adjusted accordingly. The individual allotments will be available April 1, 2000 on the ADD homepage on the Internet: *http://www.acf.dhhs.gov/programs/add/*

EFFECTIVE DATE: October 1, 2000. Future notification of allotments for DDC and P&A will no longer be published in the **Federal Register**, but will be available on the Internet address given above by April 1st of each year.

FOR FURTHER INFORMATION CONTACT: Doris Lee, Grants Fiscal Management Specialist, Office of Management Services, Administration for Children, Youth and Families, telephone (202) 205–4626.

SUPPLEMENTARY INFORMATION: Section 125 (a)(2) of the Act requires that adjustments in the amounts of State allotments shall be made not more often than annually and that States are to be notified no less than six (6) months before the beginning of the fiscal year in which such adjustment is to take effect. In relation to the State DDC allotments, the description of service needs were reviewed in the State plans and are consistent with the results obtained from the data elements and projected formula amounts for each State (Section 125(a)(5)).

The Administration on Developmental Disabilities has updated the following data elements for issuance of Fiscal Year 2001 allotments for the Developmental Disabilities formula grant programs.

A. The number of beneficiaries in each State and Territory under the Childhood Disabilities Beneficiary Program are from Table 5.J10 of the ''Annual Statistical Supplement, 1999 to the Social Security Bulletin'' issued by the Social Security Administration;

B. State data on Average Per Capita Income are from Table 1—Personal Income and Per Capita Personal Income by State and Region, 1993–98 of the ''Survey of Current Business,'' May, 1999, issued by the Bureau of Economic Analysis, U.S. Department of Commerce; comparable data for the Territories also were obtained from the Department of Commerce September, 1999; and

C. State data on Total Population and Working Population (ages 18–64) as of July 1, 1998, are from the ''Estimate of Resident Population of the U.S. by Selected Age Groups and Sex,'' issued by the Bureau of the Census, U.S. Department of Commerce. Total population estimates for the Territories, as of 1997, were issued May, 1998 under press release CB98–80. The Territories working population was issued in the Bureau of Census report, ''General Characteristics Report: 1980,'' which is the most recent data available from the Bureau.

TABLE 1.—FY 2001 ALLOTMENTS ADMINISTRATION ON DEVELOPMENTAL DISABILITIES

	Developmental Disabilities Councils	Percentage
Alabama	$1,280,704	1.947839
Alaska	408,984	.622029
Arizona	864,880	1.315407
Arkansas	747,603	1.137039
California	5,658,558	8.606172
Colorado	712,785	1.084084
Connecticut	645,893	.982347
Delaware	408,984	.622029
District of Columbia	408,984	.622029
Florida	2,778,080	4.225217
Georgia	1,612,070	2.451817
Hawaii	408,984	.622029
Idaho	408,984	.622029
Illinois	2,584,071	3.930146
Indiana	1,425,566	2.168161
Iowa	774,177	1.177456
Kansas	594,253	.903807
Kentucky	1,184,933	1.802179
Louisiana	1,375,723	2.092354
Maine	408,984	.622029
Maryland	901,119	1.370523
Massachusetts	1,250,543	1.901966
Michigan	2,293,461	3.488154
Minnesota	980,322	1.490984
Mississippi	912,473	1.387792
Missouri	1,290,019	1.962006
Montana	408,984	.622029
Nebraska	414,312	.630132
Nevada	408,984	.622029

TABLE 1.—FY 2001 ALLOTMENTS ADMINISTRATION ON DEVELOPMENTAL DISABILITIES—Continued

	Developmental Disabilities Councils	Percentage
New Hampshire	408,984	.622029
New Jersey	1,452,791	2.209568
New Mexico	449,515	.683673
New York	4,036,228	6.138750
North Carolina	1,767,777	2.688634
North Dakota	408,984	.622029
Ohio	2,791,669	4.245884
Oklahoma	887,831	1.350313
Oregon	683,935	1.040205
Pennsylvania	3,026,521	4.603074
Rhode Island	408,984	.622029
South Carolina	1,030,500	1.567300
South Dakota	408,984	.622029
Tennessee	1,404,358	2.135906
Texas	4,173,299	6.347223
Utah	507,501	.771865
Vermont	408,984	.622029
Virginia	1,337,203	2.033769
Washington	1,037,010	1.577201
West Virginia	739,342	1.124475
Wisconsin	1,249,657	1.900619
Wyoming	408,984	.622029
American Samoa	214,718	.326567
Guam	214,718	.326567
Northern Mariana Islands	214,718	.326567
Puerto Rico	2,308,670	3.511285
Virgin Islands	214,718	.326567
Total	65,750,000 [1]	100.000000

[1] Allocations are computed based on the requirements of Section 125(a)(3)(B), Reduction of Allotment of the Act.

TABLE 2.—FY 2001 ALLOTMENTS ADMINISTRATION ON DEVELOPMENT DISABILITIES

	Protection and advocacy	Percentage
Alabama	$465,705	1.690534
Alaska	267,768	.972012
Arizona	388,730	1.411111
Arkansas	277,337	1.006748
California	2,347,035	8.519864
Colorado	294,498	1.069044
Connecticut	276,697	1.004425
Delaware	267,768	.972012
District of Columbia	267,768	.972012
Florida	1,188,948	4.315945
Georgia	653,949	2.373870
Hawaii	267,768	.972012
Idaho	267,768	.972012
Illinois	951,104	3.452559
Indiana	536,953	1.949168
Iowa	273,978	.994555
Kansas	267,768	.972012
Kentucky	435,383	1.580464
Louisiana	478,649	1.737522
Maine	267,768	.972012
Maryland	364,046	1.321507
Massachusetts	466,490	1.693384
Michigan	893,221	3.242440
Minnesota	378,784	1.375006
Mississippi	332,243	1.206060
Missouri	490,603	1.780915
Montana	267,768	.972012
Nebraska	267,768	.972012
Nevada	267,768	.972012
New Hampshire	267,768	.972012
New Jersey	551,995	2.003772
New Mexico	267,768	.972012
New York	1,423,590	5.167708

TABLE 2.—FY 2001 ALLOTMENTS ADMINISTRATION ON DEVELOPMENT DISABILITIES—Continued

	Protection and advocacy	Percentage
North Carolina	690,481	2.506483
North Dakota	267,768	.972012
Ohio	1,037,007	3.764391
Oklahoma	329,068	1.194536
Oregon	281,919	1.023382
Pennsylvania	1,073,080	3.895338
Rhode Island	267,768	.972012
South Carolina	395,715	1.436467
South Dakota	267,768	.972012
Tennessee	525,514	1.907644
Texas	1,594,404	5.787773
Utah	267,768	.972012
Vermont	267,768	.972012
Virginia	543,539	1.973076
Washington	413,862	1.502341
West Virginia	289,650	1.051446
Wisconsin	470,485	1.707886
Wyoming	267,768	.972012
American Samoa	143,255	.520024
Guam	143,255	.520024
Northern Mariana Islands	143,255	.520024
Puerto Rico	897,039	3.256300
Virgin Islands	143,255	.520024
DNA People Legal		
Services [2]	143,255	.520024
Total	$27,547,800 [1]	100.000000 4

[1] In accordance with Public Law 104–183, Section 142(c)(5), $562,200 has been withheld to fund technical assistance. The statute provides for spending up to two percent (2%) of the amount appropriated under Section 143 for this purpose. Unused funds will be reallotted in accordance with Section 142(c)(1) of the Act.

[2] American Indian Consortiums are eligible to receive an allotment under Section 142(c)(1)(A)(I) of the Act.

Dated: March 13, 2000

Sue E. Swenson,

Commissioner, Administration on Developmental Disabilities.

[FR Doc. 00–7019 Filed 3–21–00; 8:45 am]

BILLING CODE 4184–01–U

DEPARTMENT OF HEALTH AND HUMAN SERVICES

Food and Drug Administration

[Docket No. 00N–0914]

Agency Information Collection Activities; Proposed Collection; Comment Request; Importer's Entry Notice; Extension

AGENCY: Food and Drug Administration, HHS.

ACTION: Notice.

SUMMARY: The Food and Drug Administration (FDA) is announcing an opportunity for public comment on the proposed collection of certain information by the agency. Under the Paperwork Reduction Act of 1995 (the PRA), Federal agencies are required to publish notice in the **Federal Register** concerning each proposed collection of information, including each proposed extension of an existing collection of information, and to allow 60 days for public comment in response to the notice. This notice solicits comments on the electronic collection of data by FDA regarding FDA-regulated products of foreign origin that are being offered for import into the United States.

DATES: Submit written comments on the collection of information by May 22, 2000.

ADDRESSES: Submit written comments on the collection of information to the Dockets Management Branch (HFA–305), Food and Drug Administration, 5630 Fishers Lane, rm. 1061, Rockville, MD 20852. All comments should be identified with the docket number found in brackets in the heading of this document.

FOR FURTHER INFORMATION CONTACT: JonnaLynn P. Capezzuto, Office of Information Resources Management (HFA–250), Food and Drug Administration, 5600 Fishers Lane, Rockville, MD 20857, 301–827–4659.

SUPPLEMENTARY INFORMATION: Under the PRA (44 U.S.C. 3501–3520), Federal agencies must obtain approval from the Office of Management and Budget (OMB) for each collection of information they conduct or sponsor. ''Collection of information'' is defined in 44 U.S.C. 3502(3) and 5 CFR 1320.3(c) and includes agency requests or requirements that members of the public submit reports, keep records, or provide information to a third party. Section 3506(c)(2)(A) of the PRA (44 U.S.C. 3506(c)(2)(A)) requires Federal agencies to provide a 60-day notice in the **Federal Register** concerning each proposed collection of information, including each proposed extension of an existing collection of information, before submitting the collection to OMB for approval. To comply with this requirement, FDA is publishing notice of the proposed collection of information set forth in this document.

With respect to the following collection of information, FDA invites comments on: (1) Whether the proposed collection of information is necessary for the proper performance of FDA's functions, including whether the information will have practical utility; (2) the accuracy of FDA's estimate of the burden of the proposed collection of information, including the validity of the methodology and assumptions used; (3) ways to enhance the quality, utility, and clarity of the information to be collected; and (4) ways to minimize the burden of the collection of information on respondents, including through the use of automated collection techniques,

when appropriate, and other forms of information technology.

Importer's Entry Notice (OMB Control Number 0910–0046)—Extension

Section 801 of the Federal Food, Drug, and Cosmetic Act (the act) (21 U.S.C. 381) charges FDA with the following responsibilities: (1) Ensuring that foreign-origin FDA-regulated foods, drugs, cosmetics, medical devices, and radiological health products offered for import into the United States meet the same requirements of the act as do domestic products; and (2) preventing shipments from entering the country if they are not in compliance.

The information collected by FDA consists of the following: (1) Product code, an alpha-numeric series of characters that identifies each product FDA regulates; (2) FDA country of origin, the country where the FDA-registered or FDA-responsible firm is located; (3) FDA manufacturer, the party who manufactured, grew, assembled, or otherwise processed the goods (if more than one, the last party who substantially transformed the product); (4) shipper, the party responsible for packing, consolidating, or arranging the shipment of the goods to their final destination; (5) quantity and value of the shipment; and (6) if appropriate, affirmation of compliance, a code that conveys specific FDA information, such as registration number, foreign government certification, etc. This information is collected electronically by the entry filer via the U.S. Customs Service's Automated Commercial System at the same time he/she files an entry for import with the U.S. Customs Service. FDA uses the information to make admissibility decisions about FDA-regulated products offered for import into the United States.

The annual reporting burden is derived from the basic processes and procedures used in fiscal year (FY) 1995. The total number of entries submitted to the automated system in FY 1999 was 5,077,493. The total number of entries less the disclaimed entries will represent the total FDA products entered into the automated system. A total of 51 percent of all entries entered into the automated system were entries dealing with FDA-regulated products. The number of respondents is a count of filers who submit entry data for foreign-origin FDA-regulated products. The estimated reporting burden is based on information obtained by FDA contacting some potential respondents. Disclaimed entries are not FDA commodities.

FDA estimates the burden of this collection of information as follows:

TABLE 1.—ESTIMATED ANNUAL REPORTING BURDEN [1]

No. of Respondents	Annual Frequency per Response	Total Annual Responses	Hours per Response	Total Hours
3,886	652	2,533,355	.14	354,669

[1] There are no capital costs or operating and maintenance costs associated with this collection of information.

Dated: March 15, 2000.

William K. Hubbard,

Senior Associate Commissioner for Policy, Planning, and Legislation.

[FR Doc. 00–7010 Filed 3–21–00; 8:45 am]

BILLING CODE 4160–01–F

DEPARTMENT OF HEALTH AND HUMAN SERVICES

Food and Drug Administration

[Docket No. 00N–0928]

Agency Information Collection Activities; Proposed Collection; Comment Request; Request for Samples and Protocols

AGENCY: Food and Drug Administration, HHS.

ACTION: Notice.

SUMMARY: The Food and Drug Administration (FDA) is announcing an opportunity for public comment on the proposed collection of certain information by the agency. Under the Paperwork Reduction Act of 1995 (the PRA), Federal agencies are required to publish notice in the **Federal Register** concerning each proposed collection of information, including each proposed extension of an existing collection of information, and to allow 60 days for public comment in response to the notice. This notice solicits comments on the information collection provisions relating to the regulations which state that protocols for samples of biological products must be submitted to the agency.

DATES: Submit written comments on the collection of information by May 22, 2000.

ADDRESSES: Submit written comments on the collection of information to the Dockets Management Branch (HFA–305), Food and Drug Administration, 5630 Fishers Lane, rm. 1061, Rockville, MD 20852. All comments should be identified with the docket number found in brackets in the heading of this document.

FOR FURTHER INFORMATION CONTACT: JonnaLynn P. Capezzuto, Office of Information Resources Management (HFA–250), Food and Drug Administration, 5600 Fishers Lane, Rockville, MD 20857, 301–827–4659.

SUPPLEMENTARY INFORMATION: Under the PRA (44 U.S.C. 3501–3520), Federal agencies must obtain approval from the Office of Management and Budget (OMB) for each collection of information they conduct or sponsor. ''Collection of information'' is defined in 44 U.S.C. 3502(3) and 5 CFR 1320.3(c) and includes agency requests or requirements that members of the public submit reports, keep records, or provide information to a third party. Section 3506(c)(2)(A) of the PRA (44 U.S.C. 3506(c)(2)(A)) requires Federal agencies to provide a 60-day notice in the **Federal Register** concerning each proposed collection of information, including each proposed extension of an existing collection of information, before submitting the collection to OMB for approval. To comply with this requirement, FDA is publishing notice of the proposed collection of information set forth in this document.

With respect to the following collection of information, FDA invites comments on: (1) Whether the proposed collection of information is necessary for the proper performance of FDA's functions, including whether the information will have practical utility; (2) the accuracy of FDA's estimate of the burden of the proposed collection of information, including the validity of the methodology and assumptions used; (3) ways to enhance the quality, utility, and clarity of the information to be collected; and (4) ways to minimize the burden of the collection of information on respondents, including through the use of automated collection techniques,

when appropriate, and other forms of information technology.

Request for Samples and Protocols (OMB Control No. 0910–0206)—Extension

Under section 351 of the Public Health Service Act (42 U.S.C. 262), FDA has the responsibility to issue regulations that prescribe standards designed to ensure the safety, purity, and potency of biological products and to ensure that licenses for such products are only issued when a product meets the prescribed standards. Under § 610.2 (21 CFR 610.2), FDA may at any time require manufacturers of licensed biological products to submit to FDA samples of any lot along with the protocols showing the results of applicable tests prior to marketing the lot of the product. In addition to § 610.2, there are other regulations that require the submission of samples and protocols for specific licensed biological products as follows: Sections 640.101(f) (21 CFR 640.101(f)) (Immune Globulin (Human)), 660.6 (21 CFR 660.6) (Antibody to Hepatitis B Surface Antigen), 660.36 (21 CFR 660.36) (Reagent Red Blood Cells), and 660.46 (21 CFR 660.46) (Hepatitis B Surface Antigen).

Section 640.101(f)(2) requires for each lot of Immune Globulin (Human) product, the submission of all protocols relating to the history of the product and all results of all tests prescribed in the additional standards for the product.

Section 660.6(a) provides requirements for the frequency of submission of samples from each lot of Antibody to Hepatitis B Surface Antigen product, and § 660.6(b) provides the requirements for the submission of a protocol containing specific information along with each required sample. For § 660.6 products subject to official release by FDA, one sample from each filling of each lot is required to be submitted along with a protocol consisting of a summary of the history or manufacture of the product, including all results of each test for which test results are requested by the Center for Biologics Evaluation and Research (CBER). After official release is no longer required, one sample along with a protocol is required to be submitted at an interval of 90 days. In addition, samples, which must be accompanied by a protocol, may at any time be required to be submitted to FDA if continued evaluation is deemed necessary.

Section 660.36(a) requires, after each routine establishment inspection by FDA, the submission of samples from a lot of final Reagent Red Blood Cell product along with a protocol containing specific information. Section 660.36(a)(2) requires a protocol containing information including, but not limited to, manufacturing records, test records, and test results. Section 660.36(b) requires a copy of the antigenic constitution matrix specifying the antigens present or absent to be submitted to FDA at the time of initial distribution of each lot.

Section 660.46(a) provides requirements for the frequency of submission of samples from each lot of Hepatitis B surface antigen product, and § 660.46(b) provides the requirements for the submission of a protocol containing specific information along with each required sample. For § 660.46 products subject to official release by FDA, one sample from each filling of each lot is required to be submitted along with a protocol consisting of a summary of the history or manufacture of the product, including all results of each test for which test results are requested by CBER. After notification of official release is received, one sample along with a protocol is required to be submitted at an interval of 90 days. In addition, samples, which must be accompanied by a protocol, may at any time be required to be submitted to FDA if continued evaluation is deemed necessary.

Samples and protocols are required by FDA to help ensure the safety, purity, or potency of the product because of the potential lot-to-lot variability of a product produced from living organisms. In cases of certain biological products (e.g., Albumin, Plasma Protein Fraction, and specified biotechnology and specified synthetic biological products) that are known to have lot-to-lot consistency, official lot release is not normally required. However, submissions of samples and protocols of these products may still be required for surveillance, licensing, and export purposes, or in the event that FDA obtains information that the manufacturing process may not result in consistent quality of the product.

The following burden estimate is for protocols required to be submitted with each sample. The collection of samples is not a collection of information under 5 CFR 1320.3(h)(2). Respondents to the collection of information under § 610.2 are manufacturers of any licensed biological product. Respondents to the collection of information under §§ 640.101(f)(2), 660.6(b), 660.36(a)(2) and (b), and 660.46(b) are manufacturers of the specific products referenced previously. The estimated number of respondents for each regulation is based on the annual number of manufacturers that submitted samples and protocols for biological products, including submissions for lot release, surveillance, licensing, or export. There are an estimated 350 manufacturers of licensed biological products, however, based on information obtained from FDA's data base system, approximately 100 manufacturers submitted samples and protocols in 1998, under the regulations cited previously. FDA estimates that approximately 86 manufacturers submitted protocols under § 610.2 and 14 manufacturers submitted protocols under the regulations for the specific products. FDA had previously estimated 80, instead of 90, manufacturers would submit samples and protocols annually under all the regulations cited previously to account for biotechnology firms that are exempt from lot release requirements. Because biotechnology firms may still be required to submit samples and protocols for purposes other than lot release, as explained previously, the number of respondents for § 610.2 in this estimate includes them. The slight increase in the total estimated number of respondents (100) is due to a normal variation in annual submissions.

The total annual responses are based on FDA's final actions completed in fiscal year 1998, which totaled 7,221, for the various submission requirements of samples and protocols for biological products. The rate of final actions is not expected to change significantly in the next few years. The hours per response are based on information provided by industry. The burden estimates provided by industry ranged from 1 to 5.5 hours. Under § 610.2, the hours per response are based on the average of these estimates and rounded to 3 hours. Under the remaining regulations, the hours per response are based on the higher end of the estimate (rounded to 5 or 6 hours) since more information is generally required to be submitted in the protocol than under § 610.2.

FDA estimates the burden of this collection of information as follows:

TABLE1.—ESTIMATED ANNUAL REPORTING BURDEN [1]

21 CFR Section	No. of Respondents	Annual Frequency per Response	Total Annual Responses	Hours per Response	Total Hours
610.2	86	82.72	7,114	3	21,342
640.101(f)(2)	5	4.40	22	5	110
660.6(b)	6	11.33	68	5	340
660.36(a)(2) and (b)	1	1	1	6	6
660.46(b)	2	8	16	5	80
Total					21,878

[1] There are no capital costs or operating and maintenance costs associated with this collection of information.

Dated: March 15, 2000.

William K. Hubbard,

Senior Associate Commissioner for Policy, Planning, and Legislation.

[FR Doc. 00–7012 Filed 3–21–00; 8:45 am]

BILLING CODE 4160–01–F

DEPARTMENT OF HEALTH AND HUMAN SERVICES

Food and Drug Administration

[Docket No. 99N–5325]

Agency Information Collection Activities; Submission for OMB Review; Irradiation in the Production, Processing, and Handling of Food

AGENCY: Food and Drug Administration, HHS.

ACTION: Notice.

SUMMARY: The Food and Drug Administration (FDA) is announcing that the proposed collection of information listed below has been submitted to the Office of Management and Budget (OMB) for review and clearance under the Paperwork Reduction Act of 1995.

DATES: Submit written comments on the collection of information by April 21, 2000.

ADDRESSES: Submit written comments on the collection of information to the Office of Information and Regulatory Affairs, OMB, New Executive Office Bldg., 725 17th St. NW., rm. 10235, Washington, DC 20503, Attn: Wendy Taylor, Desk Officer for FDA.

FOR FURTHER INFORMATION CONTACT: Peggy Schlosburg, Office of Information Resources Management (HFA–250), Food and Drug Administration, 5600 Fishers Lane, Rockville, MD 20857, 301–827–1223.

SUPPLEMENTARY INFORMATION: In compliance with 44 U.S.C. 3507, FDA has submitted the following proposed collection of information to OMB for review and clearance.

Irradiation in the Production, Processing, and Handling of Food—21CFR Part 179 (OMB Control Number 0910–0186—Extension)

Under sections 201(s) and 409 of the Federal Food, Drug, and Cosmetic Act (the act) (21 U.S.C. 321(s) and 348), food irradiation is subject to regulation as a food additive. The regulations providing for uses of irradiation in the production, processing, and handling of food are found in part 179 (21 CFR part 179).

To assure safe use of radiation source, § 179.21(b)(1) requires that the label of sources bear appropriate and accurate information identifying the source of radiation and the maximum energy of radiation emitted by X-ray tube sources. Section 179.21(b)(2)(i) requires that the label or accompanying labeling bear adequate directions for installation and use.

Section 179.25(e) requires that food processors who treat food with radiation make and retain, for 1 year past the expected shelf life of the products up to a maximum of 3 years, specified records relating to the irradiation process (e.g., the food treated, lot identification, scheduled process, etc.).

The records required by § 179.25(e) are used by FDA inspectors to assess compliance with the regulation that establishes limits within which radiation may be safely used to treat food. The agency cannot ensure safe use without a method to assess compliance with the dose limits, and there are no practicable methods for analyzing most foods to determine whether they have been treated with ionizing radiation and are within the limitations set forth in part 179. Records inspection is the only way to determine whether firms are complying with the regulations for treatment of foods with ionizing radiation.

In the **Federal Register** of December 29, 1999 (64 FR 73054), the agency requested comments on the proposed collections of information (hereinafter referred to as the 60-day notice). No significant comments were received.

FDA estimates the burden of this collection of information as follows:

TABLE1.—ESTIMATED ANNUAL RECORDKEEPING BURDEN[1]

21 CFR Section	No. of Recordkeepers	Annual Frequency per Recordkeeping	Total Annual Records	Hours per Recordkeeper	Total Hours
179.25(e)	3	120	360	1	360

[1] There are no capital costs or operating and maintenance costs associated with this collection of information.

The number of firms who process food using irradiation is extremely limited. FDA estimates that there is a single irradiation plant whose business is devoted primarily (i.e., approximately 100 percent) to irradiation of food and other agricultural products. Two other firms also irradiate small quantities of food (mainly spices). FDA estimates that this irradiation accounts for no more than 10 percent of the business for each of these firms. Although recent FDA rulemaking has authorized the irradiation of red meat, the United States Department of Agriculture/Food Safety and Inspection Service (USDA/FSIS) has yet to issue a rule regarding meat irradiation. Actual implementation of meat irradiation cannot take place until USDA/FSIS final regulations are in place, which may not take place until later this fiscal year. At this time, FDA has no basis for estimating the extent of changes in the food irradiation business

as a result of future USDA/FSIS actions. Therefore, the average estimated burden is based on the following: (1) A facility devoting 100 percent of its business (or 300 hours for recordkeeping annually) to food irradiation; and (2) facilities devoting 10 percent of their business or 60 hours (2 x 30 hours) for recordkeeping annually, to food irradiation or (300 + 60)/3 = 120 x 3 firms x 1 hour = 360 hours annually.

As stated in the 60-day notice, no burden was estimated for the labeling requirements in §§ 179.21(b)(2)(i) and (b)(2)(ii) and 179.26(c) because the information to be disclosed is information that has been supplied by FDA. Under 5 CFR 1320.3(c)(2), the public disclosure of information originally supplied by the Federal Government to the recipient for the purpose of disclosure to the public is not a collection of information. Therefore in this notice, table 1 from the 60-day notice (64 FR 73054 at 73055) estimated annual reporting burden is not included.

Dated: March 16, 2000.

William K. Hubbard,

Senior Associate Commissioner for Policy, Planning, and Legislation.

[FR Doc. 00–7008 Filed 3–21–00; 8:45 am]

BILLING CODE 4160–01–F

DEPARTMENT OF HEALTH AND HUMAN SERVICES

Food and Drug Administration

Arthritis Advisory Committee; Notice of Meeting

AGENCY: Food and Drug Administration, HHS.

ACTION: Notice.

This notice announces a forthcoming meeting of a public advisory committee of the Food and Drug Administration (FDA). At least one portion of the meeting will be closed.

Name of Committee: Arthritis Advisory Committee.

General Function of the Committee: To provide advice and recommendations to the agency on FDA's regulatory issues.

Date and Time: The meeting will be held on April 11, 2000, 8 a.m. to 5 p.m.

Location: Holiday Inn, Walker and Whetstone Rooms, Two Montgomery Village Ave., Gaithersburg, MD.

Contact Person: Kathleen R. Reedy or LaNise S. Giles, Center for Drug Evaluation and Research (HFD–21), Food and Drug Administration, 5600 Fishers Lane (for express delivery, 5630 Fishers Lane, rm. 1093), Rockville, MD 20857, 301–827–7001, or e-mail: reedyk@cder.fda.gov, or FDA Advisory Committee Information Line, 1–800–741–8138 (301–443–0572 in the Washington, DC area), code 12532. Please call the Information Line for up-to-date information on this meeting.

Agenda: The committee will discuss biologics license application 99–0884, Enbrel™ (etanercept, Immunex), for an indication in patients with early rheumatoid arthritis.

Procedure: The meeting is open to the public from 8 a.m. to 2:30 p.m. Interested persons may present data, information, or views, orally or in writing, on issues pending before the committee. Written submissions may be made to the contact person by April 3, 2000. Oral presentations from the public will be scheduled between approximately 10:30 a.m. and 11:30 a.m. Time allotted for each presentation may be limited. Those desiring to make formal oral presentations should notify the contact person before April 3, 2000, and submit a brief statement of the general nature of the evidence or arguments they wish to present, the names and addresses of proposed participants, and an indication of the approximate time requested to make their presentation.

Closed Committee Deliberations: The meeting will be closed from 2:30 p.m. to 5 p.m. to permit discussion and review of trade secret and/or confidential information (5 U.S.C. 552b(c)(4)).

Notice of this meeting is given under the Federal Advisory Committee Act (5 U.S.C. app. 2).

Dated: March 15, 2000.

Linda A. Suydam,

Senior Associate Commissioner.

[FR Doc. 00–7006 Filed 3–21–00; 8:45 am]

BILLING CODE 4160–01–F

DEPARTMENT OF HEALTH AND HUMAN SERVICES

Food and Drug Administration

Orally Inhaled and Nasal Drug Products Subcommittee of the Advisory Committee for Pharmaceutical Science; Notice of Meeting

AGENCY: Food and Drug Administration, HHS.

ACTION: Notice.

This notice announces a forthcoming meeting of a public advisory committee of the Food and Drug Administration (FDA). The meeting will be open to the public.

Name of Committee: Orally Inhaled and Nasal Drug Products Subcommittee of the Advisory Committee for Pharmaceutical Science.

General Function of the Committee: To provide advice and recommendations to the agency on FDA's regulatory issues.

Date and Time: The meeting will be held on April 26, 2000, 8:30 a.m. to 5:30 p.m.

Location: 5630 Fishers Lane, Center for Drug Evaluation and Research Advisory Committee conference room 1066, Rockville, MD.

Contact Person: Kimberly Littleton Topper, Center for Drug Evaluation and Research (HFD–21), Food and Drug Administration, 5600 Fishers Lane, Rockville, MD 20857, 301–827–7001, e-mail: TOPPERK@cder.fda.gov, or FDA Advisory Committee Information Line, 1–800–741–8138 (301–443–0572 in the Washington, DC area), code 12539. Please call the Information Line for up-to-date information on this meeting.

Agenda: The subcommittee will discuss specific scientific issues where the additional expertise of the subcommittee is needed to aid the agency in refining draft guidances for orally inhaled and nasal drug products in the areas of: (1) Chemistry, manufacturing, and controls; and (2) in vitro and in vivo bioavailability/bioequivalence.

Procedure: Interested persons may present data, information, or views, orally or in writing, on issues pending before the committee. Written submissions may be made to the contact person by April 19, 2000. Oral presentations from the public will be scheduled between approximately 1 p.m. to 2 p.m. Time allotted for each presentation may be limited. Those desiring to make formal oral presentations should notify the contact person before April 19, 2000, and submit a brief statement of the general nature of the evidence or arguments they wish to present, the names and addresses of proposed participants, and an indication of the approximate time requested to make their presentation.

Notice of this meeting is given under the Federal Advisory Committee Act (5 U.S.C. app. 2).

Dated: March 14, 2000.

Linda A. Suydam,

Senior Associate Commissioner.

[FR Doc. 00–7007 Filed 3–21–00; 8:45 am]

BILLING CODE 4160–01–F

DEPARTMENT OF HEALTH AND HUMAN SERVICES

Food and Drug Administration

[Docket No. 99N–4933]

Agency Information Collection Activities; Submission for OMB Review; Comment Request; FDA Safety Alert/Public Health Advisory Readership Survey

AGENCY: Food and Drug Administration, HHS.

ACTION: Notice.

SUMMARY: The Food and Drug Administration (FDA) is announcing that the proposed collection of information listed below has been submitted to the Office of Management and Budget (OMB) for review and clearance under the Paperwork Reduction Act of 1995.

DATES: Submit written comments on the collection of information by April 21, 2000.

ADDRESSES: Submit written comments on the collection of information to the Office of Information and Regulatory Affairs, OMB, New Executive Office Bldg., 725 17th St. NW., rm. 10235, Washington, DC 20503, Attn: Wendy Taylor, Desk Officer for FDA.

FOR FURTHER INFORMATION CONTACT: Peggy Schlosburg, Office of Information Resources Management (HFA–250), Food and Drug Administration, 5600 Fishers Lane, Rockville, MD 20857, 301–827–1223.

SUPPLEMENTARY INFORMATION: In compliance with 44 U.S.C. 3507, FDA has submitted the following proposed collection of information to OMB for review and clearance.

FDA Safety Alert/Public Health Advisory Readership Survey (OMB Control No. 0910–0341—Extension)

Section 705(b) of the Federal Food, Drug, and Cosmetic Act (the act) (21 U.S.C. 375(b)) authorizes FDA to disseminate information concerning imminent danger to public health by any regulated product. The Center for Devices and Radiological Health (CDRH) communicates these risks to user communities through two publications: (1) The FDA Safety Alert and (2) the Public Health Advisory. Safety alerts and advisories are sent to organizations such as hospitals, nursing homes, hospices, home health care agencies, manufacturers, retail pharmacies, and other health care providers. Subjects of previous alerts included spontaneous combustion risks in large quantities of patient examination gloves, hazards associated with the use of electric heating pads, and retinal photic injuries from operating microscopes during cataract surgery.

Section 1701(a)(4) of the Public Health Service Act (42 U.S.C. 300u(a)(4)) authorizes FDA to conduct research relating to health information. FDA seeks to evaluate the clarity, timeliness, and impact of safety alerts and public health advisories by surveying a sample of recipients. Subjects will receive a questionnaire to be completed and returned to FDA. The information to be collected will address how clearly actions for reducing risk are explained, the timeliness of the information, and whether the reader has taken any action to eliminate or reduce risk as a result of information in the alert. Subjects will also be asked whether they wish to receive future alerts electronically, as well as how the safety alert program might be improved.

The information collected will be used to shape FDA's editorial policy for the safety alerts and public health advisories. Understanding how target audiences view these publications will aid in deciding what changes should be considered in their content, format, and method of dissemination.

In the **Federal Register** of November 26, 1999 (64 FR 66479), the agency requested comments on the proposed collections of information. No significant comments were received.

FDA estimates the burden of this collection of information as follows:

TABLE 1.—ESTIMATED ANNUAL REPORTING BURDEN[1]

No. of Respondents	Annual Frequency per Response	Total Annual Responses	Hours per Response	Total Hours
308	3	924	.17[2]	157

[1] There are no capital costs or operating and maintenance costs associated with this collection of information.

[2] Due to a clerical error, the reporting burden hours for ''Hours per Response'' that appeared in the FEDERAL REGISTER of November 26, 1999 (64 FR 66480) were incorrect. Table 1 of this document contains the correct information.

Based on the history of the safety alert and the public health advisory program, it is estimated that an average of three collections will be conducted a year. The total burden of response time is estimated at 10 minutes per survey. This was derived by CDRH staff completing the survey and through discussions with the contacts in trade organizations.

Dated: March 15, 2000.

William K. Hubbard,

Senior Associate Commissioner for Policy, Planning, and Legislation.

[FR Doc. 00–7009 Filed 3–21–00; 8:45 am]

BILLING CODE 4160–01–F

DEPARTMENT OF HEALTH AND HUMAN SERVICES

National Institutes of Health

National Cancer Institute; Targeted Screening for Inhibitors of Human Herpesvirus 8 DNA Polymerase Activity

Opportunities for Cooperative Research and Development Agreements (CRADAs) are available for collaborations with the Screening Technologies Branch (STB), Developmental Therapeutics Program (DTP), National Cancer Institute (NCI) to discover and develop inhibitors of human herpesvirus 8 (HHV8) DNA polymerase. Collaborative projects will focus upon the inhibition of HHV8 as it relates to the disease processes of cancers which occur in patients with AIDS. This has been identified as an area of high national and international priority.

AGENCY: National Cancer Institute, National Institutes of Health, PHS, DHHS.

ACTION: Notice of opportunities for Cooperative Research and Development Agreements (CRADAs).

SUMMARY: Pursuant to the Federal Technology Transfer Act of 1986 (FTTA, 15 U.S.C. 3710; and Executive Order 12591 of April 10, 1987, as amended by the National Technology Transfer and Advancement Act of 1995), the National Cancer Institute (NCI) of the National Institutes of Health (NIH) of the Public Health Service (PHS) of the Department of Health and Human Services (DHHS) seeks one or more Cooperative Research and Development Agreements (CRADAs) with pharmaceutical or chemical companies to discover and develop new potential antiviral (HHV8) drug leads. The CRADA would have an expected duration of one (1) to five (5) years. The goals of the CRADA include the rapid publication of research results and timely commercialization of products, methods of treatment or prevention that may result from the research. The CRADA Collaborator will have an option to negotiate the terms of an exclusive or non-exclusive commercialization license to subject inventions arising under the CRADA

and which are subject of the CRADA Research Plan.

ADDRESSES: Proposals and questions about this CRADA opportunity may be addressed to Dr. Bjarne Gabrielsen, Technology Development & Commercialization Branch, National Cancer Institute-Frederick Cancer Research & Development Center, Fairview Center, Room 502, Frederick, MD 21701 (phone: 301–846–5465, fax: 301–846–6820).

Scientific inquires should be submitted to Dr. Robert Shoemaker, Chief, Screening Technologies Branch, National Cancer Institute-Frederick Cancer Research & Development Center, Bldg. 431A, P.O. Box B, Frederick MD, 21702–1201 [phone: (301)–846–5432; Fax: (301)–846–6844; e-mail shoemaker@dtpax2.ncifcrf.gov .

EFFECTIVE DATE: Inquiries regarding CRADA proposals and scientific matters may be forwarded at any time. Confidential, preliminary CRADA proposals, preferably two pages or less, must be submitted to the NCI within 30 days from date of this publication. Guidelines for preparing final CRADA proposals will be communicated shortly thereafter to all respondents with whom initial confidential discussions will have established sufficient mutual interest.

SUPPLEMENTARY INFORMATION:

Technology Available

The Screening Technologies Branch (STB) of the Developmental Therapeutics Program is an NCI extramural research activity dedicated to the discovery of new potential lead molecules for antitumor, antiviral, or antimicrobial drug development. General background and contact information for the DTP are available on the Internet at http://www.dtp.nci.nih.gov. The STB comprises an interdisciplinary research team, and appropriate resources, expertise and experience, to carry out all essential aspects of lead-discovery, including high-throughput screening (HTS), cell-based bioassays, chemical isolation, purification and structural determinations.

STB's principal lead-discovery strategy employs high-throughput screening (HTS) to identify bioactive molecules. The sought-for bioactivity is defined by the specific type(s) of assay and/or target(s) employed in the primary screen(s) used for bioassay support of the process. In the current solicitation, CRADA partners are sought for discovery efforts targeted to the DNA polymerase and processivity factor of human herpesvirus 8. This target was cloned and characterized in the laboratory of Dr. Robert Ricciardi and is proprietary to the University of Pennsylvania. STB is implementing HTS against this target in collaboration with Dr. Ricciardi. Therefore, it is anticipated that the University of Pennsylvania will either be a third party to this CRADA collaboration or the potential CRADA collaborator would obtain rights to the target under a separate agreement with the University of Pennsylvania.

Technology Sought

STB now seeks potential collaborators with novel or distinctive pure compound collections suitable for high-throughput screening and medicinal and synthetic chemical expertise and resources for follow-up and optimization of antiviral drug leads. Primary consideration will be given to collaborators with large well-characterized chemical libraries available as individual compounds in multiwell plates. Availability of bulk compound for ''hit'' confirmation and characterization and ability to rapidly perform synthetic work to optimize lead compounds will also be major factors in consideration of potential CRADA partners.

Collaborators Sought

Accordingly, DHHS now seeks collaborative arrangements for the joint STB and collaborator discovery research and development of novel, clinically useful, antiviral (HHV8) drugs of high public health priority. For collaborations with the commercial sector, a Cooperative Research and Development Agreement (CRADA) will be established to provide for equitable distribution of intellectual property rights developed under the CRADA. CRADA aims will include rapid publication of research results as well as full and timely exploitation of any commercial opportunities.

As a minimum, the successful Collaborator should either possess broad experience in most, if not all, of the following areas; or possess highly specialized, unique expertise in one or more of the following areas, as particularly pertinent to drug lead-discovery and development: (a) creation of chemical libraries for use in high-throughput drug screening; (b) ability to carry out or direct chemical synthetic studies supporting lead-optimization, drug candidate selection and development.

NCI will provide no funding to the Collaborator in as much as financial contributions by the U.S. Government to non-Federal parties under a CRADA are not authorized under the Federal Technology Transfer Act [15 U.S.C. 3710(a)(d)(1)].

NCI and Collaborator Responsibilities

The role of the National Cancer Institute in this CRADA will include, but not be limited to:

1. Providing intellectual, scientific, and technical expertise and experience to the research project.
2. Providing the Collaborator with screening and test data for evaluation.
3. Planning research studies and interpreting research results.
4. Publishing research results.

The role of the CRADA Collaborator may include, but not be limited to:

1. Providing significant intellectual, scientific, and technical expertise or experience to the research project.
2. Providing chemical libraries for use in high-throughput screening and synthetic compounds necessary for follow-up and optimization of leads identified by screening.
3. Planning research studies and interpreting research results.
4. Publishing research results.

Selection criteria for choosing the CRADA Collaborator may include, but not be limited to:

1. The ability to collaborate with NCI on research and development of this technology involving lead discovery/optimization and biological evaluation. This ability can be demonstrated through experience, expertise, and the ability to contribute intellectually in this or related areas of drug discovery research and development.
2. The demonstration of adequate resources to perform the research, development and commercialization of this lead discovery/optimization and biological evaluation technology (e.g. facilities, personnel and expertise) and accomplish objectives according to an appropriate timetable to be outlined in the CRADA Collaborator's proposal.
3. The willingness to commit best effort and demonstrated resources to the research, development and commercialization of this technology as defined above.
4. The willingness to cooperate with the National Cancer Institute in the timely publication of research results.
5. The agreement to be bound by the appropriate DHHS regulations relating to human subjects, and all PHS policies relating to the use and care of laboratory animals.
6. The willingness to accept the legal provisions and language of the CRADA with only minor modifications, if any. These provisions govern the equitable distribution of patent rights to CRADA inventions. Generally, the rights of

ownership are retained by the organization that is the employer of the inventor, with (1) the grant of a license for research and other Government purposes to the Government when the CRADA Collaborator's employee is the sole inventor, or (2) the grant of an option to elect an exclusive or non-exclusive license to the CRADA Collaborator when the Government employee is the sole inventor.

Dated: March 7, 2000.

Kathleen Sybert,

Chief, Technology Development & Commercialization Branch, National Cancer Institute, National Institutes of Health.

[FR Doc. 00–7050 Filed 3–21–00; 8:45 am]

BILLING CODE 4140–01–P

DEPARTMENT OF HEALTH AND HUMAN SERVICES

National Institutes of Health

National Cancer Institute; Steroid Derivatives with Paclitaxel-Like Activity

An opportunity is available for a Cooperative Research and Development Agreement (CRADA) for the purpose of collaborating with the Screening Technology Branch, National Cancer Institute (STB, NCI) on further research and development of U.S. government-owned technology encompassed within U.S. Provisional Patent Application Serial No. 60/161,533, entitled ''B-Homoestra-1,3,5(10)-trienes as Modulators of Tubulin Polymerization.''

AGENCY: National Cancer Institute, National Institutes of Health, PHS, DHHS.

ACTION: Notice of opportunity for cooperative research and development (CRADA).

SUMMARY: Pursuant to the Federal Technology Transfer Act of 1986 (FTTA, 15 U.S.C. 3710; and Executive Order 12591 of April 10, 1987, as amended by the National Technology Transfer and Advancement Act of 1995), the National Cancer Institute (NCI) of the National Institutes of Health (NIH) of the Public Health Service (PHS) of the Department of Health and Human Services (DHHS) seeks a Cooperative Research and Development Agreement (CRADA) with a pharmaceutical or biotechnology company to develop new drugs and therapeutic methods based on screening pre-existing steroid libraries from the collaborator for paclitaxel-like activities and/or screening steroid derivatives from a directed synthetic effort by the collaborator to produce more active paclitaxel-like compounds. The CRADA would have an expected duration of one (1) to five (5) years. The goals of the CRADA include the rapid publication of research results and timely commercialization of products or methods of treatment that may result from the research. The CRADA Collaborator will have an option to negotiate the terms of an exclusive or non-exclusive commercialization license to subject inventions arising under the CRADA and which are subject of the CRADA Research Plan, and can apply for background licenses to the existing patent described above, subject to any pre-existing licenses already issued for other fields of use. Dr. Mark Cushman of Purdue University is a co-inventor on the U.S. Provisional Patent Application Serial No. 60/161,533, entitled ''B-Homoestra-1,3,5(10)-trienes as Modulators of Tubulin Polymerization.'' Therefore, it is anticipated that negotiations with Purdue University regarding their interest in the original patent application would be required if the potential CRADA collaborator required exclusive rights to the technology encompassed by this patent.

ADDRESSES: Proposals and questions about this CRADA opportunity may be addressed to Dr. Bjarne Gabrielsen, Technology Development & Commercialization Branch, National Cancer Institute-Frederick Cancer Research & Development Center, Fairview Center, Room 502, Frederick, MD 21701 (phone: 301–846–5465, fax: 301–846–6820).

Scientific inquiries should be directed to Dr. Ernest Hamel, Senior Investigator, Screening Technology Branch, National Cancer Institute-Frederick Cancer Research & Development Center, Bldg. 469, Rm. 237, Frederick, MD 21702–1201 [phone: (301)-846–1678; fax: (301)-846–6014]; e-mail: *hamele@dc37a.nci.nih.gov*

EFFECTIVE DATE: Inquiries regarding CRADA proposals and scientific matters may be forwarded at any time. Confidential preliminary CRADA proposals, preferably two pages or less, must be submitted to the NCI on or before June 20, 2000. Guidelines for preparing final CRADA proposals will be communicated shortly thereafter to all respondents with whom initial confidential discussions will have established sufficient mutual interest.

SUPPLEMENTARY INFORMATION:

Technology Available

DHHS scientists within the STB, NCI, in a collaboration with the laboratory of Dr. Mark Cushman, Purdue University, relating to steroid molecules that interact with tubulin, have discovered a subgroup of steroid derivatives that have paclitaxel-like effects on tubulin. Instead of inhibiting tubulin assembly, the new class induces formation of hyperstable microtubules and hypernucleates tubulin assembly. However, the most active molecules so far discovered are considerably less active than paclitaxel and have limited cytotoxicity. Details are in U.S. Provisional Patent Application Serial No. 60/161,533 available under an appropriate Confidential Disclosure Agreement.

Technology Sought

Accordingly, DHHS now seeks collaborative arrangements for the screening, joint elucidation, evaluation and development of novel compounds and methods to produce more active paclitaxel-like compounds. For collaboration with the commercial sector, a Cooperative Research and Development Agreement (CRADA) will be established to provide for equitable distribution of intellectual property rights developed under the CRADA. CRADA aims will include rapid publication of research results as well as full and timely exploitation of any commercial opportunities.

NCI and Collaborator Responsibilities

The role of the laboratory of Dr. Hamel, STB, NCI in this CRADA will include, but not be limited to:

1. Providing intellectual, scientific, and technical expertise and experience to the research project.
2. Undertake evaluation of compounds in their interactions with purified tubulin and examination of effects of promising compounds on cell growth and morphology. It is anticipated that such screening efforts would also reveal compounds that inhibit tubulin assembly and that have significant inhibitory effects on angiogenesis.
3. Planning research studies and interpreting research results.
4. Publishing research results.

The role of the CRADA Collaborator may include, but not be limited to:

1. Providing significant intellectual, scientific, and technical expertise or experience to the research project such as lead optimization, organic synthetic efforts directed toward new analogs, derivatives.
2. Planning research studies and interpreting research results.
3. Providing technical expertise and/or financial support for CRADA-related research as outlined in the CRADA Research Plan.
4. Publishing research results.

Selection criteria for choosing the CRADA Collaborator may include, but not be limited to:

1. The ability to collaborate with NCI on further research and development of this technology. This ability can be demonstrated through experience and expertise in this or related areas of technology indicating the ability to contribute intellectually to on-going research and development.

2. Expertise and experience in the following areas: preclinical research and drug development of steroidal, paclitaxel-like compounds; ability to perform appropriate chemical synthetic efforts to support structure/activity (SAR) studies, lead-optimization, drug candidate selection and development.

3. The demonstration of adequate resources to perform the research, development and commercialization of this technology (*e.g.,* facilities, personnel and expertise) and accomplish objectives according to an appropriate timetable to be outlined in the CRADA Collaborator's proposal.

4. The willingness to commit best effort and demonstrated resources to the research, development and commercialization of this technology.

5. The demonstration of expertise in the commercial development, production, marketing and sales of products related to this area of technology.

6. The willingness to cooperate with the National Cancer Institute in the timely publication of research results.

7. The agreement to be bound by the appropriate DHHS regulations relating to human subjects, and all PHS policies relating to the use and care of laboratory animals.

8. The willingness to accept the legal provisions and language of the CRADA with only minor modifications, if any. These provisions govern the equitable distribution of patent rights to CRADA inventions. Generally, the rights of ownership are retained by the organization that is the employer of the inventor, with (1) the grant of a license for research and other Government purposes to the Government when the CRADA Collaborator's employee is the sole inventor, or (2) the grant of an option to elect an exclusive or non-exclusive license to the CRADA Collaborator when the Government employee is the sole inventor.

Dated: March 7, 2000.

Kathleen Sybert,

Chief, Technology Development & Commercialization Branch, National Cancer Institute, National Institutes of Health.

[FR Doc. 00–7051 Filed 3–21–00; 8:45 am]

BILLING CODE 4140–01–P

DEPARTMENT OF HEALTH AND HUMAN SERVICES

National Institutes of Health

National Institute of Diabetes and Digestive and Kidney Diseases; Notice of Closed Meeting

Pursuant to section 10(d) of the Federal Advisory Committee Act, as amended (5 U.S.C. Appendix 2), notice is hereby given of the following meeting.

The meeting will be closed to the public in accordance with the provisions set forth in sections 552b(c)(4) and 552b(c)(6), Title 5 U.S.C., as amended. The grant applications and the discussions could disclose confidential trade secrets or commercial property such as patentable material, and personal information concerning individuals associated with the grant applications, the disclosure of which would constitute a clearly unwarranted invasion of personal privacy.

Name of Committee: National Institute of Diabetes and Digestive and Kidney Diseases Special Emphasis Panel, [ZDK1–GRB–1 (M3)P].

Date: April 10–11, 2000.

Time: 7 pm to 5 pm.

Agenda: To review and evaluate grant applications.

Place: Courtyard by Marriott, 3899 Jefferson Davis Highway, Arlington, VA 22202, (703) 549–3434.

Contact Person: Carolyn Miles, PhD, Scientific Review Administrator, Review Branch, DEA, NIDDK Natcher Building, Room 6AS–43A National Institutes of Health Bethesda, MD 20892, (301) 594–7791.

(Catalogue of Federal Domestic Assistance Program Nos. 93.847, Diabetes, Endocrinology and Metabolic Research; 93.848, Digestive Diseases and Nutrition Research; 93.849, Kidney Diseases, Urology and Hematology Research, National Institutes of Health, HHS)

Dated: March 14, 2000.

LaVerne Y. Stringfield,

Director, Office of Federal Advisory Committee Policy.

[FR Doc. 00–7045 Filed 3–21–00; 8:45 am]

BILLING CODE 4140–01–M

DEPARTMENT OF HEALTH AND HUMAN SERVICES

National Institutes of Health

National Institute of Mental Health; Amended Notice of Meeting

Notice is hereby given of a change in the meeting of the National Institute of Mental Health Special Emphasis Panel, February 18, 2000, 11 AM to February 18, 2000, 1 PM, Neuroscience Center, National Institutes of Health, 6001 Executive Blvd., Bethesda, MD, 20892 which was published in the **Federal Register** on February 9, 2000, 65 FR 6387.

The meeting will now be held on March 24, 2000 at the same place from 11:30 AM to 1:30 PM. The meeting is closed to the public.

Dated: March 15, 2000.

LaVerne Y. Stringfield,

Director, Office of Federal Advisory Committee Policy.

[FR Doc. 00–7046 Filed 3–21–00; 8:45 am]

BILLING CODE 4140–01–M

DEPARTMENT OF HEALTH AND HUMAN SERVICES

National Institutes of Health

National Institute of Mental Health; Notice of Closed Meetings

Pursuant to section 10(d) of the Federal Advisory Committee Act, as amended (5 U.S.C. Appendix 2), notice is hereby given of the following meetings.

The meetings will be closed to the public in accordance with the provisions set forth in sections 552b(c)(4) and 552b(c)(6), Title 5 U.S.C., as amended. The grant applications and the discussions could disclose confidential trade secrets or commercial property such as patentable material, and personal information concerning individuals associated with the grant applications, the disclosure of which would constitute a clearly unwarranted invasion of personal privacy.

Name of Committee: National Institute of Mental Health Special Emphasis Panel.

Date: March 29, 2000.

Time: 10:00 a.m. to 12:00 p.m.

Agenda: To review and evaluate grant applications.

Place: Neuroscience Center, National Institutes of Health, 6001 Executive Blvd., Bethesda, MD 20892, (Telephone Conference Call).

Contact Person: Jerry Cott, PHD, Scientific Review Administrator, National Institute of Mental Health, NIH, 6001 Executive Blvd., Room 7160, MSC 9635, Bethesda, MD 20892–9635, (301) 443–1185.

This notice is being published less than 15 days prior to the meeting due to the timing limitations imposed by the review and funding cycle.

Name of Committee: National Institute of Mental Health Special Emphasis Panel.

Date: April 4, 2000.

Time: 1:30 p.m. to 2:30 p.m.

Agenda: To review and evaluate grant applications.

Place: Neuroscience Center, National Institutes of Health, 6001 Executive Blvd.,

Bethesda, MD 20892, (Telephone Conference Call).

Contact Person: Jerry Colt, PHD, Scientific Review Administrator, National Institute of Mental Health, NIH, 6001 Executive Blvd., Room 7160, MSC 9635, Bethesda, MD 20892–9635, (301) 443–1185.

This notice is being published less than 15 days prior to the meeting due to the timing limitations imposed by the review and funding cycle.

Name of Committee: National Institute of Mental Health Special Emphasis Panel.

Date: April 6, 2000.

Time: 9:00 a.m. to 5:00 p.m.

Agenda: To review and evaluate grant applications.

Place: Chevy Chase Holiday Inn, 5520 Wisconsin Ave., Chevy Chase, MD 20815.

Contact Person: Sheila O'Malley, Scientific Review Administrator, Division of Extramural Activities, National Institute of Mental Health, NIH, Neuroscience Center, 6001 Executive Blvd., Room 6138, MSC 9606, Bethesda, MD 20892–9606, (301) 443–6470.

This notice is being published less than 15 days prior to the meeting due to the timing limitations imposed by the review and funding cycle.

(Catalogue of Federal Domestic Assistance Program Nos. 93.242, Mental Health Research Grants; 93.281, Scientist Development Award, Scientist Development Award for Clinicians, and Research Scientist Award; 93.282, Mental Health National Research Service Awards for Research Training, National Institutes of Health, HHS)

Dated: March 15, 2000.

LaVerne Y. Stringfield,

Director, Office of Federal Advisory Committee Policy.

[FR Doc. 00–7047 Filed 3–21–00; 8:45 am]

BILLING CODE 4140–01–M

DEPARTMENT OF HEALTH AND HUMAN SERVICES

National Institutes of Health

National Institute of General Medical Sciences; Notice of Closed Meeting

Pursuant to section 10(d) of the Federal Advisory Committee Act, as amended (5 U.S.C. Appendix 2), notice is hereby given of the following meeting.

The meeting will be closed to the public in accordance with the provisions set forth in sections 552b(c)(4) and 552b(c)(6), Title 5 U.S.C., as amended. The grant applications and the discussions could disclose confidential trade secrets or commercial property such as patentable material, and personal information concerning individuals associated with the grant applications, the disclosure of which would constitute a clearly unwarranted invasion of personal privacy.

Name of Committee: National Institute of General Medical Sciences Special Emphasis Panel Trauma and Burn.

Date: April 4–6, 2000.

Time: 8 p.m. to 12 p.m.

Agenda: To review and evaluate grant applications.

Place: Wyndham Garden Hotel, Pittsburgh University Place, 3454 Forbes Avenue, Pittsburgh, PA 15213.

Contact Person: Michael A. Sesma, PhD, Scientific Review Administrator, Office of Scientific Review, National Institute of General Medical Sciences, Natcher Building, Room 1AS19H, 45 Center Drive, Bethesda, MD 20892, (301) 594–2048, sesmam@nigms.nih.gov.

(Catalogue of Federal Domestic Assistance Program Nos. 93.375, Minority Biomedical Research Support; 93.821, Cell Biology and Biophysics Research; 93.859, Pharmacology, Physiology, and Biological Chemistry Research; 93.862, Genetics and Developmental Biology Research; 93.88, Minority Access to Research Careers; 93.96, Special Minority Initiatives, National Institutes of Health, HHS)

Dated: March 15, 2000.

LaVerne Y. Stringfield,

Director, Office of Federal Advisory Committee Policy.

[FR Doc. 00–7048 Filed 3–21–00; 8:45 am]

BILLING CODE 4140–01–M

DEPARTMENT OF HEALTH AND HUMAN SERVICES

National Institutes of Health

National Institute of Mental Health; Notice of Closed Meetings

Pursuant to section 10(d) of the Federal Advisory Committee Act, as amended (5 U.S.C. Appendix 2), notice is hereby given of the following meetings.

The meetings will be closed to the public in accordance with the provisions set forth in sections 552b(c)(4) and 552b(c)(6), Title 5 U.S.C., as amended. The grant applications and the discussions could disclose confidential trade secrets or commercial property such as patentable material, and personal information concerning individuals associated with the grant applications, the disclosure of which would constitute a clearly unwarranted invasion of personal privacy.

Name of Committee: National Institute of Mental Health Special Emphasis Panel.

Date: March 21, 2000.

Time: 1:30 p.m. to 4 p.m.

Agenda: To review and evaluate grant applications.

Place: Neuroscience Center, National Institutes of Health, 6001 Executive Blvd., Bethesda, MD 20892, (Telephone Conference Call).

Contact Person: Michael J. Moody, Scientific Review Administrator, Division of Extramural Activities, National Institute of Mental Health, NIH, Neuroscience Center, 6001 Executive Blvd., Room 6154, MSC 9609, Bethesda, MD 20892–9609, 301–443–3367.

This notice is being published less than 15 days prior to the meeting due to the timing limitations imposed by the review and funding cycle.

Name of Committee: National Institute of Mental Health Special Emphasis Panel.

Date: March 29, 2000.

Time: 1:30 p.m. to 3 p.m.

Agenda: To review and evaluate grant applications.

Place: Neuroscience Center, National Institutes of Health, 6001 Executive Blvd., Bethesda, MD 20892, (Telephone Conference Call).

Contact Person: Michael J. Moody, Scientific Review Administrator, Division of Extramural Activities, National Institute of Mental Health, NIH, Neuroscience Center, 6001 Executive Blvd., Room 6154, MSC 9609, Bethesda, MD 20892–9606, 301–443–3367.

This notice is being published less than 15 days prior to the meeting due to the timing limitations imposed by the review and funding cycle.

(Catalogue of Federal Domestic Assistance Program Nos. 93.242, Mental Health Research Grants; 93.281, Scientist Development Award, Scientist Development Award for Clinicians, and Research Scientist Award; 93.282, Mental Health National Research Service Awards for Research Training, National Institutes of Health, HHS)

Dated: March 15, 2000.

LaVerne Y. Stringfield,

Director, Office of Federal Advisory Committee Policy.

[FR Doc. 00–7049 Filed 3–21–00; 8:45 am]

BILLING CODE 4140–01–M

DEPARTMENT OF HEALTH AND HUMAN SERVICES

Substance Abuse and Mental Health Services Administration

Office for Women's Services; Notice of Meeting

Pursuant to Public Law 92–463, notice is hereby given of the meeting of the Advisory Committee for Women's Services of the Substance Abuse and Mental Health Services Administration (SAMHSA) on March 30, 2000.

The meeting of the Advisory Committee for Women's Services will include a discussion of policy and program issues relating to women's substance abuse and mental health service needs; the SAMHSA fiscal year 2000 budget; resolutions adopted at the Committee's November meeting; specific Committee goals for the current year, consideration of November meeting minutes; and other policy issues.

A summary of the meeting and/or a roster of committee members may be obtained from: Nancy P. Brady, Executive Secretary, Advisory Committee for Women's Services, Office for Women's Services, SAMHSA, Parklawn Building, Room 13–99, 5600 Fishers Lane, Rockville, Maryland 20857, Telephone: (301) 443–8964.

Substantive information may be obtained from the contact whose name and telephone number is listed below.

Committee Name: Advisory Committee for Women's Services.

Meeting Date(s): March 30, 2000.

Meeting Time: 10 a.m.–Noon.

Place: Room 12–94, Parklawn Building, 5600 Fishers Lane, Rockville, MD 20857.

Open: March 30, 2000.

Contact: Nancy P. Brady, Room 13–99, Parklawn Building, Telephone: (301) 443–8964.

This notice is being published less than 15 days prior to the meeting due to the urgent need to meet timing limitations imposed by the review and funding cycle.

Dated: March 15, 2000.

Coral Sweeney,

Review Specialist, SAMHSA.

[FR Doc. 00–7013 Filed 3–21–00; 8:45 am]

BILLING CODE 4162–20–P

DEPARTMENT OF THE INTERIOR

Bureau of Land Management

[NV–055–1232–HB]

Temporary Closure of the Red Rock Canyon Visitors Center, Las Vegas, Nevada

AGENCY: Bureau of Land Management, Interior.

ACTION: The Acting Field Manager, Las Vegas Field Office, Las Vegas, Nevada, announces a temporary closure of the Red Rock National Conservation Area, Visitors Center, in Las Vegas, Nevada. The Red Rock Visitors Center needs urgent repair and replacement of a hot tar roof. The Scenic Drive at the Red Rock Canyon will remain open.

EFFECTIVE DATES: The closure will go into effect March 27, 2000 through March 31, 2000. The Visitors Center will reopen on April 1, 2000.

FOR FURTHER INFORMATION CONTACT: Sheree Fisher at (702) 647–5142 or Bob Dunn at (702) 647–5103.

Dated: March 15, 2000.

James R. Dunn,

Acting Field Manager.

[FR Doc. 00–7089 Filed 3–21–00; 8:45 am]

BILLING CODE 4310–MR–M

DEPARTMENT OF THE INTERIOR

National Park Service

Glacier Bay National Park, Alaska; Dungeness Crab Commercial Fishery Crewmember Interim Compensation Program

AGENCY: National Park Service, Interior.

ACTION: Glacier Bay National Park application procedures for the Dungeness crab commercial fishery crewmember interim compensation program.

SUMMARY: Section 123 (c) of the Omnibus Consolidated and Emergency Supplemental Appropriations Act for FY 1999 (''the Act''), as amended by section 501 of the 1999 Emergency Supplemental Appropriations Act, Public Law 106–31 (05/21/99), authorizes compensation for fish processors, fishing vessel crewmembers, communities and others negatively affected by congressionally directed restrictions on commercial fishing in the marine waters of Glacier Bay National Park. The National Park Service (NPS) and the state of Alaska are currently working to develop and implement a compensation program broadly envisioned by Congress in the Act; completion of this compensation program is expected to require one to two years. This is a separate compensation program from that specifically authorized for valid Dungeness crab commercial fishing permit holders by Section 123(b) of the DOI & Related Agencies Approp. Act, 1999, (section 101(e) of division A of P.L. 105–277, as amended). NPS has largely completed that specific compensation program and eight Dungeness crab fishermen/permit holders were determined to be eligible and have been compensated as required by the Act. More recently, NPS, with concurrence of the state of Alaska, responded to a congressional request and established an interim compensation program for Dungeness crab processors similarly qualified and similarly effected by the 1999 closure of designated wilderness to commercial Dungeness crab fishing (See 64 FR 41134 [July 29, 1999.]) NPS, with concurrence of the state of Alaska, now responds to another congressional request and will provide interim compensation for crewmembers who fished with any of the eight Dungeness crab fishermen compensated to date under provisions of section (b) of the Act. Applicants for this interim Dungeness crab commercial fishery crewmember compensation program must meet eligibility and application requirements described in this **Federal Register** notice to qualify for payment. This interim payment is intended to mitigate 1999 income losses for qualifying Dungeness crab fishery crewmembers until the compensation program under section (c) of the Act—and appropriate eligibility criteria, priorities and levels of compensation for crewmembers in the effected commercial fisheries—can be developed and implemented. The amount of this interim compensation payment will not exceed $10,000 per qualifying individual. This **Federal Register** notice serves to provide application instructions for Dungeness crab fishery crewmembers who believe they qualify for interim compensation. Applications must be provided to the Compensation Program Manager, Glacier Bay National Park and Preserve, within 60 days of the publication date of this notice.

DATES: Applications for the Dungeness crab commercial fishery crewmember interim compensation program will be accepted on or before May 22, 2000.

ADDRESSES: Applications for the Dungeness crab commercial fishery crewmember interim compensation program should be submitted to the Compensation Program Manager, Glacier Bay National Park and Preserve, 2770 Sherwood Lane, Suite I, Juneau, Alaska 99801.

FOR FURTHER INFORMATION CONTACT: For information regarding the Dungeness crab commercial fishery compensation program, please contact Clark Millett, Compensation Program Manager, Glacier Bay National Park and Preserve, 2770 Sherwood Lane, Suite I, Juneau, Alaska 99801. Phone: (907) 586–7047.

SUPPLEMENTARY INFORMATION: The Act, as amended, required Dungeness crab fishermen to provide certain information sufficient to determine their eligibility for compensation. NPS will require similar corroborating documentation from Dungeness crab fishery crewmembers making application for 1999 interim compensation as described in this notice. Dungeness crab fishery crewmembers must provide the following information to the NPS Compensation Program Manager: (1) Full name, mailing address, and a contact phone number. (2) A sworn and notarized personal affidavit attesting to the applicant's history of participation in the Dungeness crab commercial fishery as a crewmember for one or more of the eight Dungeness crab fishermen already compensated, including any two of three years during the interim qualifying period, 1996–

1998. The applicant must also attest that they intended to continue working as a crewmember in the Dungeness crab commercial fishery in 1999. (3) A sworn and notarized affidavit, from each of the qualifying fishermen they worked for during the interim qualifying period, 1996—1998, attesting to the applicant's participation in each of those interim qualifying years as a crewmember in the commercial Dungeness crab fishery within either Beardslee Island or Dundas Bay wilderness areas. (4) Documentation from the Alaska Department of Fish and Game detailing the applicant's history as a state licensed commercial fisheries crewmember. (5) Copy of IRS Form 1099–MISC documenting income as a crewmember for qualifying Dungeness crab commercial fishermen for each year worked during the 1996–1998 interim qualifying period. Where crewmember income from other fisheries is included in the IRS Form 1099–MISC this must be noted and the amount attributable only to the Dungeness crab fishery specified. (5) Any other available corroborating information that can assist in a determination of eligibility for interim compensation. The superintendent will make a written determination on eligibility for compensation based on the documentation provided by the applicant. The superintendent will also make a written determination on the amount of 1999 interim compensation to be paid to an eligible applicant. The amount of interim compensation will be based on the applicant's average annual pre-tax income as a crewmember in the Dungeness crab commercial fishery during the 3-year interim qualifying period, 1996—1998, not to exceed $10,000. NPS intends to complete payment of interim compensation to a crewmember meeting the above eligibility criteria within 45 days of receipt of a complete application. If an application for interim compensation is denied the superintendent will provide the applicant the reasons for the denial in writing. Any applicant adversely affected by the superintendent's determination may appeal to the regional director, Alaska region, within 60 days. Applicants must substantiate the basis of their disagreement with the superintendent's determination. The regional director will provide an opportunity for an informal oral hearing, either in Anchorage or by teleconference. After consideration of written materials and oral hearing, if any, and within a reasonable time, the regional director will affirm, reverse, or modify the superintendent's determination and set forth in writing the basis for the decision. A copy of the decision will be forwarded promptly to the applicant and will constitute final agency action. Denial or receipt of interim compensation as a Dungeness crab fishery crewmember will not affect an applicant's consideration for future compensation as a crewmember as part of a final compensation plan established under the Act, as amended.

Dated: March 6, 2000.

Robert D. Barbee,

Regional Director, Alaska.

[FR Doc. 00–7021 Filed 3–21–00; 8:45 am]

BILLING CODE 4310–70–P

DEPARTMENT OF THE INTERIOR

Bureau of Reclamation

Bostwick Division, Frenchman-Cambridge Division, and Kanaska Division, Almena Unit INT–DEIS–99–39

AGENCY: Bureau of Reclamation, Interior.

ACTION: Notice to reopen comment period for draft environmental impact statement (DEIS) and announce schedule for public workshop and public meeting.

SUMMARY: Pursuant to section 102(2)(C) of the National Environmental Policy Act of 1969, as amended, the Department of the Interior, Bureau of Reclamation (Reclamation), prepared a DEIS for the renewal of long-term water supply contracts for continued delivery of irrigation water from Federal projects in the Republican River basin in Nebraska and Kansas. The DEIS described five alternatives, including no action and a preferred alternative, and evaluated the environmental consequences of renewing the long-term water supply contracts and of modifications to reservoir operations. Public hearings were held in Nebraska and Kansas to receive public comment on the DEIS.

The Corps of Engineers (Corps), along with other Federal, State, and local entities, is a cooperating agency in the water supply contract renewal process. Harlan County Lake in Nebraska is owned by the United States and managed by the Corps. Following completion of the initial 60-day public review and comment period, Reclamation and the Corps continued to receive public comment concerning alternative operations at Harlan County Lake. The magnitude of these comments prompted Reclamation and the Corps to allow additional time for all interested parties to provide comments on the water supply contract renewal process.

DATES: A 30-day public review and comment period commences with the publication of this notice. Written comments on the DEIS or the Corps' technical report should be submitted by April 21, 2000.

Written comments from interested parties unable to attend the hearing, those not wanting to make oral presentations, or those wishing to supplement their oral presentations at the public hearing should be transmitted to the Nebraska-Kansas Area Office by April 21, 2000, for inclusion in the public record.

A joint Reclamation/Corps public meeting has been scheduled to begin at 7 p.m. on April 12, 2000. An informal public workshop has also been scheduled from 10 a.m. to 4 p.m.

ADDRESSES: The meeting and workshop will be held at the Johnson Community Center, 509 Main Street, in Alma, Nebraska.

Written comments on Reclamation's DEIS should be submitted to the Area Manager (Attention: Judy O'Sullivan), Nebraska-Kansas Area Office, P.O. Box 1607, Grand Island NE 68802. Written comments on the Corps' technical report should be submitted to District Engineer, U.S. Army Corps of Engineers, Kansas City District, 700 Federal Building, 601 East Twelfth Street, Kansas City MO 64106–2896.

You may request a Summary of the DEIS, the entire DEIS (with appendices) in printed copy or on computer disk, or the Corps' technical report. Copies may be obtained from the above address or by telephone (308) 389–4622 x211. The DEIS and technical report is available for public inspection and review on Reclamation's Internet site at ''www.gp.usbr.gov'' in the ''Current Activities'' section under ''Environmental Activities.'' In addition, the technical report can be viewed at the two Corps' Internet sites ''www.nwk.usace.army.mil'' and ''www.nwk.usace.army.mil/haco/harlan_home.htm''

See Supplementary Information section for additional addresses where the DEIS and/or technical report are available for public inspection and review.

FOR FURTHER INFORMATION CONTACT: Jill Manring, Basin Study Coordinator, Nebraska-Kansas Area Office, P.O. Box 1607, Grand Island NE 68802—telephone (308) 389–4622 x214; or Maria Chastain-Brand, Project Manager-Harlan County Lake Study, U.S. Army Corps of Engineers, Kansas City District, 700 Federal Building, 601 East Twelfth

Street, Kansas City MO 64106–2896—telephone (816) 983-3107.

SUPPLEMENTARY INFORMATION: Reclamation has revised the preferred alternative by modifying minimum reservoir surface elevations at Reclamation reservoirs and by implementing an agreement with the Corps on the operation of Harlan County Lake. A description of the revised preferred alternative is being distributed in the Republican River Roundup newsletter. Reclamation will not prepare a revised DEIS because the impacts associated with the modified minimum reservoir surface elevations on Reclamation reservoirs and the Harlan County Lake agreement fall within the range of those evaluated in the No Action Alternative and Reclamation's Preferred Alternative in the DEIS.

The Corps has developed a technical report addressing the potential impacts of the revised preferred alternative on Harlan County Lake. The Corps' technical report is being distributed to the contract renewal mailing list on March 22, 2000, and will be incorporated into Reclamation's Final EIS. The Corps, as a cooperating agency, will consider comments on the effects of the preferred alternative on Harlan County Lake. In addition, the Corps will prepare a separate Record of Decision (ROD) concerning the relationship of the preferred alternative to the Corps' Harlan County Lake water control manual. Both Reclamation's revised preferred alternative and the Corps' technical report can be reviewed at the locations listed below.

DEIS and Technical Report Public Inspection and Review Locations

Offices

- Bureau of Reclamation, Nebraska-Kansas Area Office, 203 West Second Street, Grand Island NE 68801—telephone (308) 389–4622.
- Bureau of Reclamation, Great Plains Regional Office, 316 North 26th Street, Billings MT 59101—telephone (406) 247–7638.
- Bureau of Reclamation, Reclamation Service Center Library, Building 67, Room 167, Denver Federal Center, Sixth and Kipling, Denver CO 80225—telephone (303) 445–2072.
- Bureau of Reclamation, Office of Policy, Room 7456, 1849 C Street NW, Washington DC 20240—telephone (202) 208–4662.
- Corps of Engineers, Kansas City District, 700 Federal Building, 601 East Twelfth Street, Kansas City, MO 64106–2896—telephone (816) 983–3107.
- Corps of Engineers, Attention: Jim Bowen, Operations Manager, Harlan County Lake, Route 1, Box 123A, Republican City NE 68971—telephone (308) 799–2105.
- Bostwick Irrigation District in Nebraska, Red Cloud NE.
- Kansas Bostwick Irrigation District No. 2, Courtland KS.
- Frenchman-Cambridge Irrigation District, Cambridge NE.
- Frenchman Valley and H&RW Irrigation District, Culbertson NE.
- Almena Irrigation District, Almena KS.

Libraries

- Alma Public Library, West Second Street, Alma NE 68920–3378.
- Blue Hill Public Library, 317 West Gage Street, Blue Hill NE 68930–2068.
- Butler Memorial Library, 621 Pennsylvania, Cambridge NE 69022.
- Franklin Public Library, 1502 P Street, Franklin NE 68939–1200.
- Hastings Public Library, 517 West Fourth Street, Hastings NE 68901–7560.
- Imperial Public Library, 703 Broadway Street, Imperial NE 69033–4017.
- Kearney Public Library, 2020 First Avenue, Kearney NE 68847–5306.
- McCook Library, 802 Norris Avenue, McCook NE 69001–3143.
- Nelson Public Library, 10 West Third Street, Nelson NE 68961–1246.
- Red Cloud Public Library, 537 North Webster Street, Red Cloud NE 68970–2421.
- Carnegie Public Library, 449 North Kansas Street, Superior NE 68978–1852.
- Trenton Village Library, 406 East First Street, Trenton NE 69044.
- Wauneta City Library, 319 North Tecumseh, Wauneta NE 69045–2011.
- Almena Public Library, 415 Main, Almena KS 67622.
- Belleville Public Library, 1327 Nineteenth Street, Belleville KS 66935.
- Courtland City Library, 403 Main Street, Courtland KS 66939.
- Northwest Kansas Library System, 2 Washington Square, Norton KS 67654.

Meeting Information

Please notify Judy O'Sullivan, Reclamation (308–389–4622, x211) or Jim Bowen, Corps, (308–799–2105) at least 1 week in advance of the scheduled hearing if you require special needs in order to participate in the public hearing. Those having special needs should contact Judy O'Sullivan at (308) 389–4622 x211 or through the Federal Relay System at (800) 877–8339 or via e-mail at ''josullivan@gp.usbr.gov'' or jim.d.bowen@usace.army.mil. Smoking will be prohibited in the hearing room and surrounding area.

Dated: March 16, 2000.

Fred R. Ore,

Area Manager, Nebraska-Kansas Area Office.

[FR Doc. 00–7055 Filed 3–21–00; 8:45 am]

BILLING CODE 4310–94–P

DEPARTMENT OF THE INTERIOR

Bureau of Reclamation

Bay-Delta Advisory Council Meeting

AGENCY: Bureau of Reclamation, Interior.

ACTION: Notice of meeting.

SUMMARY: The Bay-Delta Advisory Council (BDAC) will meet on April 13, 2000 to discuss CALFED Preferred Program Alternative Recommendation, Governance, Water Management Strategy, Ecosystem Restoration and Updates. These meetings are open to the public. Interested persons may make oral statements to BDAC, or may file written statements for consideration.

DATES: The BDAC meeting will be held from 9 a.m. to 5 p.m. on Thursday, April 13, 2000.

ADDRESSES: The BDAC will meet at the Sterling Hotel Ballroom, 1300 H Street, Sacramento, CA (916) 448–1300.

FOR FURTHER INFORMATION CONTACT: Eugenia Laychak, CALFED Bay-Delta Program, at (916) 657–2666. If reasonable accommodation is needed due to a disability, please contact the Equal Employment Opportunity Office at (916) 653–6952 or TDD (916) 653–6934 at least one week prior to the meeting.

SUPPLEMENTARY INFORMATION: The San Francisco Bay/Sacramento-San Joaquin Delta Estuary (Bay-Delta system) is a critically important part of California's natural environment and economy. In recognition of the serious problems facing the region and the complex resource management decisions that must be made, the state of California and the Federal government are working together to stabilize, protect, restore, and enhance the Bay-Delta system. The State and Federal agencies with management and regulatory responsibilities in the Bay-Delta system are working together as CALFED to provide policy direction and oversight for the process.

One area of Bay-Delta management includes the establishment of a joint State-Federal process to develop long-term solutions to problems in the Bay-Delta system related to fish and wildlife, water supply reliability, natural disasters, and water quality. The intent is to develop a comprehensive and

balanced plan which addresses all of the resource problems. This effort, the CALFED Bay-Delta Program (Program), is being carried out under the policy direction of CALFED. The Program is exploring and developing a long-term solution for a cooperative planning process that will determine the most appropriate strategy and actions necessary to improve water quality, restore health to the Bay-Delta ecosystem, provide for a variety of beneficial uses, and minimize Bay-Delta system vulnerability. A group of citizen advisors representing California's agricultural, environmental, urban, business, fishing, and other interests who have a stake in finding long-term solutions for the problems affecting the Bay-Delta system has been chartered under the Federal Advisory Committee Act (FACA). The BDAC provides advice to CALFED on the program mission, problems to be addressed, and objectives for the Program. BDAC provides a forum to help ensure public participation, and will review reports and other materials prepared by CALFED staff.

Minutes of the meeting will be maintained by the Program, Suite 1155, 1416 Ninth Street, Sacramento, CA 95814, and will be available for public inspection during regular business hours, Monday through Friday within 30 days following the meeting.

Dated: March 16, 2000.

Lester A. Snow,

Regional Director, Mid-Pacific Region.

[FR Doc. 00–7054 Filed 3–21–00; 8:45 am]

BILLING CODE 4310–94–M

INTERNATIONAL TRADE COMMISSION

Investigation No. 731–1TA–856 (Final)

Ammonium Nitrate from Russia

AGENCY: International Trade Commission.

ACTION: Revised schedule for the subject investigation.

EFFECTIVE DATE: March 15, 2000.

FOR FURTHER INFORMATION CONTACT: Karen Taylor (202–708–4101), Office of Investigations, U.S. International Trade Commission, 500 E Street SW, Washington, DC 20436. Hearing-impaired persons can obtain information on this matter by contacting the Commission's TDD terminal on 202–205–1810. Persons with mobility impairments who will need special assistance in gaining access to the Commission should contact the Office of the Secretary at 202–205–2000. General information concerning the Commission may also be obtained by accessing its internet server (*http://www.usitc.gov*).

SUPPLEMENTARY INFORMATION: On January 7, 2000, the Commission established a schedule for the conduct of the final phase of the subject investigation (65 FR 2643. January 18, 2000). On March 1, 2000, the Commission published a notice in the **Federal Register** revising this schedule (65 FR 11080). This revised schedule provided for a public hearing to be held on May 24, 2000.

The Commission now is revising the date of the hearing to May 25, 2000; the hearing will be held at the U.S. International Trade Commission Building at 9:30 a.m. No other scheduled dates relative to this investigation are being revised.

For further information concerning this investigation see the Commission's notice cited above and the Commission's Rules of Practice and Procedure, part 201, subparts A through E (19 CFR part 201), and part 207, subparts A and C (19 CFR part 207).

Authority: This investigation is being conducted under authority of title VII of the Tariff Act of 1930; this notice is published pursuant to section 207.21 of the Commission's rules.

Issued: March 15, 2000.

By order of the Commission.

Donna R. Koehnke,

Secretary.

[FR Doc. 00–7078 Filed 3–21–00; 8:45 am]

BILLING CODE 7020–02–P

INTERNATIONAL TRADE COMMISSION

[Investigation No. 731–TA–539–C, E and F (Review)]

Uranium from Russia, Ukraine and Uzbekistan

AGENCY: United States International Trade Commission.

ACTION: Revised schedule for the subject 5-year reviews.

EFFECTIVE DATE: March 15, 2000.

FOR FURTHER INFORMATION CONTACT: Larry Reavis (202–205–3185), Office of Investigations, U.S. International Trade Commission, 500 E Street SW, Washington, DC 20436. Hearing-impaired persons can obtain information on this matter by contacting the Commission's TDD terminal on 202–205–1810. Persons with mobility impairments who will need special assistance in gaining access to the Commission should contact the Office of the Secretary at 202–205–2000. General information concerning the Commission may also be obtained by accessing its internet server (http://www.usitc.gov).

SUPPLEMENTARY INFORMATION: On January 14, 2000, the Commission established a schedule for the conduct of the subject 5-year reviews (**Federal Register** 65 FR 3737, January 24, 2000). The Commission has determined to exercise its authority to extend the review period by up to 90 days pursuant to 19 U.S.C. 1675(c)(5)(B), and is hereby revising its schedule.

The Commission's new schedule for the reviews is as follows: requests to appear at the hearing must be filed with the Secretary to the Commission not later than June 2, 2000; the prehearing conference will be held at the U.S. International Trade Commission Building at 9:30 a.m. on June 7, 2000; the prehearing staff report will be placed in the nonpublic record on May 25, 2000; the deadline for filing prehearing briefs is June 5, 2000; the hearing will be held at the U.S. International Trade Commission Building at 9:30 a.m. on June 13, 2000; the deadline for filing posthearing briefs is June 22, 2000; the Commission will make its final release of information on July 14, 2000; and final party comments are due on July 18.

For further information concerning the reviews see the Commission's notice cited above and the Commission's Rules of Practice and Procedure, part 201, subparts A through E (19 CFR part 201), and part 207, subparts A and C (19 CFR part 207).

Authority: These reviews are being conducted under authority of title VII of the Tariff Act of 1930; this notice is published pursuant to section 207.21 of the Commission's rules.

By order of the Commission.

Issued: March 15, 2000.

Donna R. Koehnke,

Secretary.

[FR Doc. 00–7077 Filed 3–21–00; 8:45 am]

BILLING CODE 7020–02–P

INTERNATIONAL TRADE COMMISSION

Security Procedures for Persons Delivering/Picking Up Packages and Documents

AGENCY: United States International Trade Commission.

ACTION: Security Procedures—Persons Delivering/Picking Up Packages and Documents.

SUMMARY: Effective immediately, all persons delivering and picking up packages and documents to USITC offices and employees must report to the mailroom, room 119 or the Office of the Secretary, suite 112.

Between the hours of 8:45 a.m. to 5:15 p.m., Monday through Friday, excluding weekends, holidays, and other days in which the agency is closed, such persons are ONLY allowed to deliver packages and documents to the mailroom, room 119 and the Office of the Secretary, suite 112.

During workdays prior to 8:45 a.m. and after 5:15 p.m. and all hours on weekends, holidays and other days in which the agency is closed, such persons will report to the guards desk in the lobby. The guard will call the intended recipient and request that they come to the main lobby and pick up the delivered material. If the guard's calls are not answered, the guard will leave a voice mail message stating that a package has been left in the USITC depository box located on the first floor center stairwell.

EFFECTIVE DATE: March 16, 2000.

FOR FURTHER INFORMATION CONTACT: Jonathan Brown (202–205–2745), Office of Facilities Management, U.S. International Trade Commission, 500 E Street SW, Washington, DC 20436. Hearing-impaired persons can obtain information on this matter by contacting the Commission's TDD terminal on 202–205–1810. Persons with mobility impairments who will need special assistance in gaining access to the Commission should contact the Office of the Secretary at 202–205–2000. General information concerning the Commission may also be obtained by accessing its internet server (http://www.usitc.gov).

Issued: March 16, 2000.

Donna R. Koehnke,

Secretary.

[FR Doc. 00–7079 Filed 3–21–00; 8:45 am]

BILLING CODE 7020–02–P

DEPARTMENT OF JUSTICE

Foreign Claims Settlement Commission

[F.C.S.C. Meeting Notice No. 1–00]

Sunshine Act Meeting

The Foreign Claims Settlement Commission, pursuant to its regulations (45 CFR Part 504) and the Government in the Sunshine Act (5 U.S.C. 552b), hereby gives notice in regard to the scheduling of meetings and oral hearings for the transaction of Commission business and other matters specified, as follows:

Date and Time: Monday, April 3, 2000, 9:30 am.

Subject Matter: Consideration of Proposed Decisions on claims against Albania.

Status: Open.

All meetings are held at the Foreign Claims Settlement Commission, 600 E Street, NW., Washington, DC. Requests for information, or advance notices of intention to observe an open meeting, may be directed to: Administrative Officer, Foreign Claims Settlement Commission, 600 E Street, NW., Room 6002, Washington, DC 20579. Telephone: (202) 616–6988.

Dated at Washington, DC, March 20, 2000.

David E. Bradley,

Chief Counsel.

[FR Doc. 00–7234 Filed 3–20–00; 2:19 pm]

BILLING CODE 4410–BA–M

DEPARTMENT OF JUSTICE

Immigration and Naturalization Service

Agency Information Collection Activities: Comment Request

ACTION: Notice of information collection under review; Application for certificate of citizenship.

The Department of Justice, Immigration and Naturalization Service has submitted the following information collection request for review and clearance in accordance with the Paperwork Reduction Act of 1995. The proposed information collection is published to obtain comments from the public and affected agencies. Comments are encouraged and will be accepted for ''sixty days'' until May 22, 2000.

Written comments and suggestion from the public and affected agencies concerning the proposed collection of information should address one or more of the following four points:

(1) Evaluate whether the proposed collection of information is necessary for the proper performance of the functions of the agency, including whether the information will have practical utility;

(2) Evaluate the accuracy of the agencies estimate of the burden of the proposed collection of information, including the validity of the methodology and assumptions used;

(3) Enhance the quality, utility, and clarity of the information to be collected; and

(4) Minimize the burden of the collection of information on those who are to respond, including through the use of appropriate automated, electronic, mechanical, or other technological collection techniques or other forms of information technology, *e.g.,* permitting electronic submission of responses.

Overview of this information collection:

(1) *Type of information collection:* Extension of currently approved collection.

(2) *Title of the form collection:* Application for Certificate of Citizenship.

(3) *Agency form number, if any, and the applicable component of the Department of Justice sponsoring the collection:* Form N–600. Adjudications Division, Immigration and Naturalization Service.

(4) *Affected public who will be asked or required to respond, as well as a brief abstract:* Primary: Individuals or households. This form is provided by the Service as a uniform format for obtaining essential data necessary to determine the applicant's eligibility for the requested immigration benefit.

(5) *An estimate of the total number of respondents and the amount of time estimated for an average respondent to respond:* 52,113 responses at 1 hour response.

(6) *An estimate of the total public burden (in hours) associated with the collection:* 52,113 annual burden hours.

If you have additional comments, suggestions or need a copy of the proposed information collection instrument with instructions, or additional information, please contact Richard A. Sloan 202–514–3291, Director, Policy Directives and Instructions Branch, Immigration and Naturalization Service, U.S. Department of Justice, Room 5307, 425 I Street NW, Washington, DC 20536. Additionally, comments and/or suggestions regarding the item(s) contained in this notice, especially regarding the estimated public burden and associated response time may also be directed to Mr. Richard A. Sloan.

If additional information is required contact Mr. Robert B. Briggs, Clearance Officer, United States Department of Justice, Information Management and Security Staff, Justice Management Division, Suite 850, Washington Center, 1001 G Street NW, Washington, DC 20530.

Dated: March 15, 2000.

Richard A. Sloan,

Department Clearance Officer, United States Department of Justice, Immigration and Naturalization Service.

[FR Doc. 00–7080 Filed 3–21–00; 8:45 am]

BILLING CODE 4410–10–M

DEPARTMENT OF JUSTICE

Immigration and Naturalization Service

Agency Information Collection Activities: Comment Request

ACTION: Notice of information collection under review; Application for certificate of citizenship in behalf of an adopted child.

The Department of Justice, Immigration and Naturalization Service has submitted the following information collection request for review and clearance in accordance with the Paperwork Reduction Act of 1995. The proposed information collection is published to obtain comments from the public and affected agencies. Comments are encouraged and will be accepted for ''sixty days'' until May 22, 2000.

Written comments and suggestions from the public and affected agencies concerning the proposed collection of information should address one or more of the following four points:

(1) Evaluate whether the proposed collection of information is necessary for the proper performance of the functions of the agency, including whether the information will have practical utility;

(2) Evaluate the accuracy of the agency's estimate of the burden of the proposed collection of information, including the validity of the methodology and assumptions used;

(3) Enhance the quality, utility, and clarity of the information to be collected; and

(4) Minimize the burden of the collection of information on those who are to respond, including through the use of appropriate automated, electronic, mechanical, or other technological collection techniques or other forms of information technology, e.g., permitting electronic submission of responses.

Overview of this information collection:

(1) *Type of information collection:* Extension of currently approved collection.

(2) *Title of the form/collection:* Application for Certificate of Citizenship in Behalf of an Adopted Child.

(3) *Agency form number, if any, and the applicable component of the Department of Justice sponsoring the collection:* Form N–643. Adjudications Division, Immigration and Naturalization Service.

(4) *Affected public who will be asked or required to respond, as well as a brief abstract:* Primary: Individuals or households. This information collection allows United States citizen parents to apply for a certificate of citizenship on behalf of their adopted alien children.

(5) *An estimate of the total number of respondents and the amount of time estimated for an average respondent to respond:* 12,390 responses at 1 hour per response.

(6) *An estimate of the total public burden (in hours) associated with the collection:* 12,390 annual burden hours.

If you have additional comments, suggestions, or need a copy of the proposed information collection instrument with instructions, or additional information, please contact Richard A. Sloan 202–514–3291, Director, Policy Directives and Instructions Branch, Immigration and Naturalization Service, U.S. Department of Justice, Room 5307, 425 I Street NW, Washington, DC 20536. Additionally, comments and/or suggestions regarding the item(s) contained in this notice, especially regarding the estimated public burden and associated response time may also be directed to Mr. Richard A. Sloan.

If additional information is required contact Mr. Roberts B. Briggs, Clearance Officer, United States Department of Justice, Information Management and Security Staff, Justice Management Division, Suite 850, Washington Center, 1001 G Street NW, Washington DC 20530.

Dated: March 16, 2000.

Richard A. Sloan,

Department Clearance Officer, United States Department of Justice, Immigration and Naturalization Service.

[FR Doc. 00–7081 Filed 3–21–00; 8:45 am]

BILLING CODE 4410–10–M

DEPARTMENT OF JUSTICE

Immigration and Naturalization Service

Agency Information Collection Activities: Comment Request

ACTION: Notice of information collection under review; Affidavit of Support.

The Department of Justice, Immigration and Naturalization Service has submitted the following information collection request for review and clearance in accordance with the Paperwork Reduction Act of 1995. The proposed information collection is published to obtain comments from the public and affected agencies. Comments are encouraged and will be accepted for ''sixty days'' until May 22, 2000.

Written comments and suggestions from the public and affected agencies concerning the proposed collection of information should address one or more of the following four points:

(1) Evaluate whether the proposed collection of information is necessary for the proper performance of the functions of the agency, including whether the information will have practical utility;

(2) Evaluate the accuracy of the agencies estimate of the burden of the proposed collection of information, including the validity of the methodology and assumptions used;

(3) Enhance the quality, utility, and clarity of the information to be collected; and

(4) Minimize the burden of the collection of information on those who are to respond, including through the use of appropriate automated, electronic, mechanical, or other technological collection techniques or other forms of information technology, e.g., permitting electronic submission of responses.

Overview of this information collection:

(1) *Type of information collection:* Extension of currently approved collection.

(2) *Title of the form collection:* Affidavit of Support.

(3) *Agency from number, if any, and the applicable component of the Department of Justice sponsoring the collection:* Form I–134. Adjudications Division, Immigration and Naturalization Service.

(4) *Affected public who will be asked or required to respond, as well as a brief abstract:* Primary: Individuals or households. The information collected is used to determine whether the applicant for benefit will become a public charge if admitted to the United States.

(5) *An estimate of the total number of respondents and the amount of time estimated for an average respondent to respond:* 44,000 responses at 20 minutes (.333) per response.

(6) *An estimate of the total public burden (in hours) associated with the collection:* 14,652 annual burden hours.

If you have additional comments, suggestions, or need a copy of the proposed information collection instrument with instructions, or additional information, please contact Richard S. Sloan, 202–514–3291, Director, Policy Directives and Instructions Branch, Immigration and Naturalization Service, U.S. Department of Justice, Room 5307, 425 I Street NW, Washington, DC 20536. Additionally, comments and/or suggestions regarding the item(s) contained in this notice, especially regarding the estimated

public burden and associated response time may also be directed by Mr. Richard A. Sloan.

If additional information is required contact Mr. Robert B. Briggs, Clearance Officer, United States Department of Justice, Information Management and Security Staff, Justice Management Division, Suite 850, Washington Center, 1001 G Street NW, Washington, DC 20530.

Dated: March 16, 2000.

Richard A. Sloan,

Department Clearance Officer, United States Department of Justice, Immigration and Naturalization Service.

[FR Doc. 00–7082 Filed 3–21–00; 8:45 am]

BILLING CODE 4410–10–M

DEPARTMENT OF JUSTICE

Immigration and Naturalization Service

Agency Information Collection Activities: Comment Request.

ACTION: Notice of information collection under review; Application to preserve residence for naturalization.

The Department of Justice, Immigration and Naturalization Service has submitted the following information collection request for review and clearance in accordance with the Paperwork Reduction Act of 1995. The proposed information collection is published to obtain comments from the public and affected agencies. Comments are encouraged and will be accepted for ''sixty days'' until [Insert date of the 60th day from the date that this notice is published in the Federal Register].

Written comments and suggestions from the public and affected agencies concerning the proposed collection of information should address one or more of the following four points:

(1) Evaluate whether the proposed collection of information is necessary for the proper performance of the functions of the agency, including whether the information will have practical utility;

(2) Evaluate the accuracy of the agencies estimate of the burden of the proposed collection of information, including the validity of the methodology and assumptions used;

(3) Enhance the quality, utility, and clarity of the information to be collected; and

(4) Minimize the burden of the collection of information on those who are to respond, including through the use of appropriate automated, electronic, mechanical, or other technological collection techniques or other forms of information technology, *e.g.,* permitting electronic submission of responses.

Overview of this information collection:

(1) *Type of Information Collection:* Extension of currently approved collection.

(2) *Title of the Form/Collection:* Application to Preserve Residence for Naturalization.

(3) *Agency form number, if any, and the applicable component of the Department of Justice sponsoring the collection:* Form N–470. Office of Naturalization Operations, Immigration and Naturalization Service.

(4) *Affected public who will be asked or required to respond, as well as a brief abstract:* Primary: Individuals or households. The information furnished on this form will be used to determine whether an alien who intends to be absent from the United States for a period of one year or more is eligible to preserve residence for naturalization purposes.

(5) *An estimate of the total number of respondents and the amount of time estimated for an average respondent to respond:* 375 responses at 15 minutes (.25) per response.

(6) *An estimate of the total public burden (in hours) associated with the collection:* 94 annual burden hours.

If you have additional comments, suggestions, or need a copy of the proposed information collection instrument with instructions, or additional information, please contact Richard A. Sloan 202–514–3291, Director, Policy Directives and Instructions Branch, Immigration and Naturalization Service, U.S. Department of Justice, Room 5307, 425 I Street, NW., Washington, DC 20536. Additionally, comments and/or suggestions regarding the item(s) contained in this notice, especially regarding the estimated public burden and associated response time may also be directed to Mr. Richard A. Sloan.

If additional information is required contact: Mr. Robert B. Briggs, Clearance Officer, United States Department of Justice, Information Management and Security Staff, Justice Management Division, Suite 850, Washington Center, 1001 G Street, NW., Washington, DC 20530.

Dated: March 16, 2000.

Richard A. Sloan,

Department Clearance Officer, Department of Justice, Immigration and Naturalization Service.

[FR Doc. 00–7083 Filed 3–21–00; 8:45 am]

BILLING CODE 4410–10–M

DEPARTMENT OF LABOR

Employment and Training Administration

Investigations Regarding Certifications of Eligibility To Apply for Worker Adjustment Assistance

Petitions have been filed with the Secretary of Labor under Section 221(a) of the Trade Act of 1974 (''the Act'') and are identified in the Appendix to this notice. Upon receipt of these petitions, the Director of the Division of Trade Adjustment Assistance, Employment and Training Administration, has instituted investigations pursuant to Section 221(a) of the Act.

The purpose of each of the investigations is to determine whether the workers are eligible to apply for adjustment assistance under Title II, Chapter 2, of the Act. The investigations will further relate, as appropriate, to the determination of the date on which total or partial separations began or threatened to begin and the subdivision of the firm involved.

The petitioners or any other persons showing a substantial interest in the subject matter of the investigations may request a public hearing, provided such request is filed in writing with the Director, Division of Trade Adjustment Assistance, at the address shown below, not later than April 3, 2000.

Interested persons are invited to submit written comments regarding the subject matter of the investigations to the Director, Division of Trade Adjustment Assistance, at the address shown below, not later than April 3, 2000.

The petitions filed in this case are available for inspection at the Office of the Director, Division of Trade Adjustment Assistance, Employment and Training Administration, U.S. Department of Labor, 200 Constitution Avenue. N.W., Washington, D.C. 20210.

Signed at Washington, D.C. this 14th day of February, 2000.

Grant D. Beale,

Program Manager, Division of Trade Adjustment Assistance.

APPENDIX

[Petitions instituted on 02/14/2000]

TA–W	Subject firm (petitioners)	Location	Date of petition	Product(s)
37,327	Energy Knits (Co.)	Denver, PA	02/03/2000	Greige Knitted Fabrics.
37,328	Thaw Corporation (Co.)	Wenatchee, WA	01/28/2000	Fleece Outerwear and Thermal Underwear.
37,329	Crown Yarn (UNITE)	So. Attleboro, MA	02/02/2000	Dyed Yarn.
37,330	Cadillac Curtain Corp. (Co.)	Dyer, TN	02/02/2000	Swag Sets.
37,331	Vesuvius Premier (USWA)	Washington, PA	01/31/2000	Firebrick for Industrial Furnaces.
37,332	Shelby Yard (Co.)	Shelby, NC	01/25/2000	Synthetic and Cotton Spun Yarns.
37,333	S. Bent and Brothers (IUE)	Gardner, MA	01/26/2000	Wooden Chairs, Tables.
37,334	Calgon Corporation (PACE)	Pasadena, TX	02/01/2000	Water Treating Chemicals.
37,335	Calvin Klein (UNITE)	New York, NY	02/01/2000	Ladies' Sportswear.
37,336	ISA Cutting Room Service (UNITE)	El Paso, TX	02/04/2000	Pants and Slacks.
37,337	G and M Cutting Room (UNITE)	El Paso, TX	02/03/2000	Patterns—Jeans and Pants.
37,338	Johnstown Knitting Mill (Co.)	Johnstown, NY	02/08/2000	Men, Women and Children's Activewear.
37,339	Cominco Ltd. (Co.)	Riddle, OR	01/26/2000	Ferronickel.
37,340	Alltex Laminating Corp. (Co.)	Mt. Vernon, NY	01/19/2000	Process Synthetic Knitted Fabrics.
37,341A	Komag, Inc (Comp)	Santa Clara, CA	01/19/2000	Disks for Computer Disk Drivers.
37,341	Komag, Inc. (Co.)	San Jose, CA	01/19/2000	Disks for Computer Disk Drivers.
37,342	Assemble USA (Wkrs)	Marion, MO	02/03/2000	Coaster Cards.
37,343	Ro An Jewelry Co., Inc (Wkrs)	Johnston, RI	02/02/2000	Costume Jewelry.
37,344	Monoa Wire Corp (Wkrs)	Greenwood, MS	01/25/2000	Wire Harnesses.
37,345	Sause Brothers (Wkrs)	Coos Bay, OR	01/11/2000	Repair Ocean-Going Hauling Vessels.
37,346	Enaid Sportswear, Inc (Wkrs)	New York, NY	01/27/2000	Sportswear and Skirts.
37,347	Devro Tee Pak, Inc (Wkrs)	Danville, IL	01/29/2000	Plastic and Cellulose Meat Casings.
37,348	McQuay International (Wkrs)	Staunton, VA	01/27/2000	Industrial Air Conditioning Equipment.
37,349	RNV Apparel (Wkrs)	Shade Gap, PA	02/01/2000	Garments.
37,350	Scotts Hill Leisurewear (Wkrs)	Scotts Hill, TN	01/26/2000	Ladies' Robes and Loungewear.
37,351	B. Braun Medical, Inc (Wkrs)	St. Clair, PA	02/03/2000	Design I.V. Sets.
37,352	Cranston Print Works (Co.)	Cranston, RI	01/26/2000	Provides Printed Cloth Sampling.
37,353	Danskin, Inc (Wkrs)	New York, NY	02/01/2000	Women's Tights, Leotards, Bra Tops.
37,354	ITW Signode Metals (Wkrs)	Weirton, WV	02/02/2000	Steel Strapping and Metal Seals.
37,355	Medtronic Perfusion (Wkrs)	Minneapolis, MN	01/28/2000	Arterial Filter.
37,356	U.S. Electrical Motors (Wkrs)	Philadelphia, MS	01/31/2000	Electrical Motors.

[FR Doc. 00–7121 Filed 3–21–00; 8:45 am]

BILLING CODE 4510–30–M

DEPARTMENT OF LABOR

Employment and Training Administration

[TA–W–35,472]

Tony Lama Boot Company, Justin Boot Company/Justin Management Company, El Paso, TX; Amended Certification Regarding Eligibility To Apply for Worker Adjustment Assistance

In accordance with Section 223 of the Trade Act of 1974 (19 USC 2273) the U.S. Department of Labor issued a Certification of Eligibility to Apply for Worker Adjustment Assistance on March 11, 1999 applicable to all workers of Tony Lama Boot Company located in El Paso, Texas. The notice was published in the **Federal Register** on April 6, 1999 (64 FR 16753).

At the request of the State agency, the Department reviewed the certification for workers of the subject firm. The workers are engaged in the production of boots. New information shows that some workers separated from employment at Tony Lama Boot Company had their wages reported under a separate unemployment insurance (UI) tax account for Justin Boot Company/Justin Management Company.

The intent of the Department's certification is to include all workers of Tony Lama Boot Company who were adversely affected by increased imports.

Accordingly, the Department is amending the certification to properly reflect this matter.

The amended notice applicable to TA–W–35,472 is hereby issued as follows:

All workers of Tony Lama Boot Company, Justin Boot Company/Justin Management Company, El Paso, Texas who became totally or partially separated from employment on or after December 21, 1997 through March 11, 2001 are eligible to apply for adjustment assistance under Section 223 of the Trade Act of 1974.

Signed at Washington, D.C. this 14th day of March, 2000.

Grant D. Beale,

Program Manager, Division of Trade Adjustment Assistance.

[FR Doc. 00–7120 Filed 3–21–00; 8:45 am]

BILLING CODE 4510–30–M

DEPARTMENT OF LABOR

Employment and Training Administration

Proposed Information Collection Request Submitted for Public Comment and Recommendations; Petition for Trade Adjustment Assistance

ACTION: Notice.

SUMMARY: The Department of Labor, as part of its continuing effort to reduce paperwork and respondent burden conducts a preclearance consultation program to provide the general public and Federal agencies with an opportunity to comment on proposed and/or continuing collections of information in accordance with the Paperwork Reduction Act of 1995

(PRA95) (44 U.S.C. 3506(c)(2)(A)). This program helps to ensure that requested data can be provided in the desired format, reporting burden (time and financial resources) is minimized, collection instruments are clearly understood, and the impact of collection requirements on respondents can be properly assessed. Currently, the Employment and Training Administration is soliciting comments concerning the proposed extension of the information collection of the Petition for Trade Adjustment Assistance, ETA 8560, and its Spanish translation, Solicitud De Asistencia Para Ajuste, ETA 8559.

A copy of the proposed information collection request can be obtained by contacting the employee listed below in the contact section of this notice

DATES: Written comments must be submitted on or before May 22, 2000. Written comments should evaluate whether the proposed collection of information is necessary for the proper performance of the functions of the agency, including whether the information will have practical utility; evaluate the accuracy of the agency's estimate of the burden of the proposed collection of information including the validity of the methodology and assumptions used; enhance the quality, utility, and clarity of the information to be collected; and minimize the burden of the collection of information on those who are to respond, including through the use of appropriate automated, electronic, mechanical, or other technological automated, electronic, mechanical, or other technological collection techniques or other forms of information technology, *e.g.,* permitting electronic submission of responses.

ADDRESSES: Edward A. Tomchick, Division of Trade Adjustment Assistance, Employment and Training Administration, Department of Labor, Room C–4318, 200 Constitution Avenue, NW., Washington, DC 20210, 202–219–5555 (this is not a toll-free number).

SUPPLEMENTARY INFORMATION:

I. Background

Section 221 (a) of Title II, Chapter 2 of the Trade Act of 1974, as amended, authorizes the Secretary of Labor to accept petitions for certification of eligibility to apply for adjustment assistance. The petitions may be filed by workers or their certified or recognized union or duly authorized representative. ETA Form 8560, Petition for Trade Adjustment Assistance, and its Spanish translation, ETA Form 8559, Solicitud De Asistencia Para Ajuste, establish a format which may be used for filing such petitions.

II. Current Actions

This is a request for OMB approval under [the Paperwork Reduction Act of 1995 (44 U.S.C. 3506(c)(A)] for an extension of collection of information previously approved and assigned OMB Control No. 1205–0192. There is no change in burden.

Type of Review: Extension without change.

Agency: Employment and Training Administration, Labor.

Title: Petition for Trade Adjustment Assistance; Solicitud De Asistencia Para Ajuste.

OMB Number: 1205–0192.

Frequency: On occasion.

Affected Public: Individuals or households.

Number of Respondents: Estimated 1,400.

Estimated Time Per Respondent: 15 minutes per response.

Total Estimated Cost: $1,750.

Total Burden Hours: 350.

Total Burden Cost (capital/startup): None.

Total Burden Cost (operating/maintaining): None.

Comments submitted in response to this notice will be summarized and/or included in the request for Office of Management and Budget approval of the information collection request; they will also become a matter of public record.

Dated: March 15, 2000.

Edward A. Tomchick,

Director, Division of Trade Adjustment Assistance.

[FR Doc. 00–7115 Filed 3–21–00; 8:45 am]

BILLING CODE 4510–30–M

DEPARTMENT OF LABOR

Employment and Training Administration

Notice of a Change in Status of an Extended Benefit (EB) Period for Alaska

This notice announces a change in benefit period eligibility under the EB Program for Alaska.

SUMMARY: The following change has occurred since the publication of the last notice regarding the State's EB status:

- February 27, 2000—Alaska triggered ''on'' EB. Alaska's 13-week insured unemployment rate rose above the 6.0 percent threshold necessary to be triggered ''on'' to EB for the week ending February 12, 2000.

Information for Claimants

The duration of benefits payable in the EB Program, and the terms and conditions on which they are payable, are governed by the Federal-State Extended Unemployment Compensation Act of 1970, as amended, and the operating instructions issued to the States by the U.S. Department of Labor. In the case of a State beginning an EB period, the State employment security agency will furnish a written notice of potential entitlement to each individual who has exhausted all rights to regular benefits and is potentially eligible for EB (20 CFR 15.13(c)(1)).

Persons who believe they may be entitled to EB, or who wish to inquire about their rights under the program, should contact the nearest State employment service office or unemployment compensation claims office in their locality.

Signed at Washington, DC on March 9, 2000.

Raymond Bramucci,

Assistant Secretary of Labor for Employment and Training.

[FR Doc. 00–7123 Filed 3–21–00; 8:45 am]

BILLING CODE 4510–30–M

DEPARTMENT OF LABOR

Employment and Training Administration

[NAFTA–02634]

Condor DC Power Supplies, Inc., The Todd Products Group, Brentwood, New York; Amended Certification Regarding Eligibility To Apply for NAFTA-Transitional Adjustment Assistance

In accordance with Section 250(A), Subchapter D, Chapter 2, Title II, of the Trade Act of 1974 (19 U.S.C. 2273), the Department of Labor issued a Certification for NAFTA Transitional Adjustment Assistance on November 9, 1998, applicable to all workers of Todd Products Corporation located in Brentwood, New York. The notice was published in the **Federal Register** on December 4, 1998 (63 FR 67141).

At the request of the company, the Department reviewed the certification for workers of the subject firm. The workers are engaged in the production of electronic power supply devices. New information received from the company shows that in July, 1999, Condor DC Power Supplies, Inc., purchased Todd Products Corporation and became know as Condor DC Power Supplies, Inc., The Todd Products Group. Information also shows that

workers separated from employment at Todd Products Corporation had their wages reported under a separate unemployment insurance (UI) tax account for Condor DC Power Supplies, Inc., The Todd Products Group.

Accordingly, the Department is amending the certification to properly reflect this matter.

The intent of the Department's certification is to include all workers of Todd Products Corporation who were adversely affected by the shift of production to Mexico.

The amended notice applicable to NAFTA—02634 is hereby issued as follows:

''All workers of Condor DC Power Supplies, Inc., The Todd Products Group, Brentwood, New York who became totally or partially separated from employment on or after September 15, 1997 through November 9, 2000 are eligible to apply for NAFTA–TAA under Section 250 of the Trade Act of 1974.''

Signed at Washington, DC this 10th day of March, 2000.

Grant D. Beale,

Program Manager, Division of Trade Adjustment Assistance.

[FR Doc. 00–7116 Filed 3–21–00; 8:45 am]

BILLING CODE 4510–30–M

DEPARTMENT OF LABOR

Employment and Training Administration

[NAFTA–03325]

Levi Strauss & Company; Amended Certification Regarding Eligibility To Apply for NAFTA Transitional Adjustment Assistance

Texas,
- NAFTA–03325A, Harlingen Plant and Texas Commission for the Blind, Harlingen, TX 78550
- NAFTA–03325B, Cypress Plant and Judy's Cafeteria, El Paso, TX 79905
- NAFTA–03325C, McAllen Plant and Texas Commission for the Blind, McAllen, TX 78504
- NAFTA–03325H, Kastrin Plant, including El Paso Digital Imaging Graphics of the El Paso Regional Office, El Paso, TX 79907
- NAFTA–03325I, Brownsville Plant, Brownsville, TX 78521
- NAFTA–03325J, San Benito Plant, San Benito, TX 78586
- NAFTA–03325K, San Antonio Sewing Plant, San Antonio, TX 78227
- NAFTA–03325L, San Antonio Finishing Plant including San Antonio Credit Union, San Antonio Finishing Plant, San Antonio, TX 78227
- NAFTA–03325P, Richardson Technology Center, Richardson, TX 75081
- NAFTA–03325Q, Westlake Data Center, Westlake, TX 76262
- NAFTA–03325R, Dallas Customer Fulfillment Regional Office, Dallas, TX 75252
- NAFTA–03325Z, Amarillo Finishing Facility, Amarillo, TX 79107

Tennessee
- NAFTA–03325D, Johnson City Plant including TRI-Cities Maid (Gary, TN), Johnson City, TN 37605
- NAFTA–03325E, Mountain City Plant including Diversco (Spartanburg, SC) and Aramark (Mountain City, TN), Mountain City, TN 37683
- NAFTA–03325M, Powell Plant, Powell, TN
- NAFTA–03325S, Knoxville Regional Office including Global Fulfillment Services Center and Knoxville Digital Imaging Graphics Department, 1700 Cherry Street, Knoxville, TN 37917

California
- NAFTA–03325N, Valencia Sweing Facility, San Francisco, CA 94103
- NAFTA–03325T, Levi Strauss & Company Corporate Headquarters, San Francisco, CA 94111

Georgia
- NAFTA–033250, Blue Ridge Plant, Blue Ridge, GA 31503

Florida
- NAFTA–03325U, Weston Customer Fulfillment Regional Office, Weston, FL 33331

Kentucky
- NAFTA–03325V, Florence Customer Service Center, Florence, KY 41042
- NAFTA–03325W, Hebron Customer Service Center, Hebron, KY 41048

Mississippi
- NAFTA–03325X, Canton Customer Service Center, Canton, MS 39046

Nevada
- NAFTA–03325Y, Sky Harbor CSC, Henderson, NV 89012

In accordance with Section 250(a), Subchapter D, Chapter 2, Title II, of the Trade Act of 1974, as amended (19 USC 2273), the Department of Labor issued a Certification of Eligibility to Apply for NAFTA Transitional Adjustment Assistance on August 7, 1997, applicable to workers of Levi Strauss and Company, located in El Paso, Texas. The notice was published in the **Federal Register** on September 29, 1999 (64 FR 52543). In addition, the Department denied eligibility for an additional eight Levi Strauss & Company facilities in Texas, Tennessee, and California because there had not been threats of employment loss at those facilities. The notice was also published in the **Federal Register** on September 29, 1999 (64 FR 52542).

The company requested that the seven of the eight facilities (NAFTA–03325H through NAFTA–03325L, and NAFTA–03325N and O) which were previously denied be certified because of reduced work hours at each facility and provided information to indicate that workers had their work hours reduced by at least 20 percent. In addition, the company requested that contractors working full-time at all of the facilities also be included in the certification. The company also requested that an additional eleven facilities and work sites in seven states (Texas, Tennessee, California, Florida, Kentucky, Mississippi, and Nevada) be included as a result of additional layoff announcements.

The intent of the Department's certification is to include all workers of Levi Strauss and Company, including full time contractors working at the identified facilities, who were adversely affected by increased imports of denim and Docker apparel from Mexico.

The amended notice applicable to NAFTA–03325 is hereby issued as follows:

All workers of the following Levi Strauss & Company facilities who became totally or partially separated from employment on or after August 8, 1999 through August 11, 2001 are eligible to apply for NAFTA–TAA under Section 250 of the Trade Act of 1974:

NAFTA–03325 Wichita Falls Plant, Wichita Falls, Texas 76303
NAFTA–03325A Harlingen Plant, including Texas Commission for the Blind, Harlingen, Texas 78550
NAFTA–03325B Cypress Plant, including Judy's Cafeteria, El Paso, Texas 79905
NAFTA–03325C McAllen Plant, including Texas Commission for the Blind, McAllen, Texas 78504
NAFTA–03325D Johnson City Plant, including Tri-Cities Maid (Gary, TN), Johnson City, Tennessee 37605
NAFTA–03325E Mountain City Plan, including Diversco (Spartanburg, SC) and Aramark Mountain City, Tennessee 37683
NAFTA–03325F Warsaw Plant, Warsaw, Virginia 22572
NAFTA–03325G Valdosta Plant, Valdosta, Georgia 31601
NAFTA–03325H Kastrin Plant, Kastrin, Texas 79907
NAFTA–03325I Brownsville Plant, Brownsville, Texas 78521
NAFTA–03325J San Benito Plant, San Benito, Texas 78586
NAFTA–03325K San Antonio Sewing Plant, San Antonio, Texas 78227
NAFTA–03325L San Antonio Finishing Plant, including San Antonio Credit Union, San Antonio Finishing Plant, San Antonio, Texas 78227
NAFTA–03325M Powell Plant, Powell, Tennessee
NAFTA–03325N Valencia Sewing Facility, San Francisco, California 94103
NAFTA–03325O Blue Ridge Plant, Blue Ridge, Georgia 31503
NAFTA–03325P Richardson Technology Center, Richardson, Texas 75081
NAFTA–03325Q Westlake Data Center, Westlake, Texas 76262
NAFTA–03325R Dallas Customer Fulfillment Regional Office, Dallas, Texas 75252
NAFTA–03325S Knoxville Regional Office, including Global Fulfillment Services Center and Knoxville Digital Imaging Graphics Department, 1700 Cherry Street, Knoxville, Tennessee 37917

NAFTA–03325T Levi Strauss & Company Corporate Headquarters, San Francisco, California 94111
NAFTA–03325U Weston Customer Fulfillment Regional Office, Weston, Florida 33331
NAFTA–03325V Florence Customer Service Center, Florence, Kentucky 41042
NAFTA–03325W Hebron Customer Service Center, Hebron, Kentucky 41048
NAFTA–03325X Canton Customer Service Center, Canton, Mississippi 39046
NAFTA–03325Y Sky Harbor CSC, Henderson, Nevada 89012
NAFTA–03325Z Amarillo Finishing Facility, Amarillo, Texas 79107.

Signed in Washington, DC this 1st day of February 2000.

Grant D. Beale,

Program Manager, Division of Trade Adjustment Assistance.

[FR Doc. 00–7117 Filed 3–21–00; 8:45 am]

BILLING CODE 4510–30–M

DEPARTMENT OF LABOR

Employment and Training Administration

[NAFTA—02447]

Nocona Boot Company, Justin Boot Company/Justin Management Company, Nocona, TX; Amended Certification Regarding Eligibility To Apply for NAFTA-Transitional Adjustment Assistance

In accordance with Section 250(A), Subchapter D, Chapter 2, Title II, of the Trade Act of 1974 (19 U.S.C. 2273), the Department of Labor issued a Certification for NAFTA Transitional Adjustment Assistance on June 26, 1998, applicable to workers of Nocona Boot Company, Nocona, Texas. The notice was published in the **Federal Register** on July 31, 1998 (63 FR 40936).

At the request of the State agency, the Department reviewed the certification for workers of the subject firm. The workers are engaged in the production of western boots. Findings show that some workers separated from employment Nocona Boot Company had their wages reported under a separate unemployment insurance (UI) tax account for Justin Boot Company/Justin Management Company.

The intent of the Department's certification is to include all workers of Nocona Boot Company who were adversely affected by increased imports from Mexico.

Accordingly, the Department is amending the certification to properly reflect this matter.

The amended notice applicable to NAFTA–02447 is hereby issued as follows:

All workers of Nocona Boot Company, Justin Boot Company/Justin Management Company, Nocona, Texas who became totally or partially separated from employment on or after April 25, 1997 through June 26, 2000 are eligible to apply for NAFTA—TAA under Section 250 of the Trade Act of 1974.

Signed at Washington, D.C. this 14th day of March, 2000.

Grant D. Beale,

Program Manager, Division of Trade Adjustment Assistance.

[FR Doc. 00–7119 Filed 3–21–00; 8:45 am]

BILLING CODE 4510–30–M

DEPARTMENT OF LABOR

Employment and Training Administration

[NAFTA–3624]

Ritvik Holdings, Inc., Lakeville, MA; Notice of Termination of Investigation

Pursuant to Section 221 of the Trade Act of 1974, an investigation was initiated on December 16, 1999, in response to a worker petition which was filed on behalf of workers at Ritvik Holdings, Inc., Lakeville, Massachusetts.

The Corporation for Business, Work, and Learning (CBWL Trade Unit) of Boston, Massachusetts has determined that the subject firm is a Canadian corporation, located in Canada and doing business in Canada, and therefor its workers are not eligible for NAFTA Transitional Adjustment Assistance under the Trade Act of 1974.

Consequently further investigation in this case would serve no purpose, and the investigation has been terminated.

Signed in Washington, D.C. this 14th day of March, 2000.

Grant D. Beale,

Program Manager, Division of Trade Adjustment Assistance.

[FR Doc. 00–7122 Filed 3–21–00; 8:45 am]

BILLING CODE 4510–30–M

DEPARTMENT OF LABOR

Employment and Training Administration

[NAFTA–02821]

Tony Lama Boot Company, Justin Boot Company, Justin Management Company, El Paso, TX; Amended Certification Regarding Eligibility To Apply for NAFTA-Transitional Adjustment Assistance

In accordance with Section 250(A), Subchapter D, Chapter 2, title II, of the Trade Act of 1974 (19 U.S.C. 2273), the Department of Labor issued a Certification for NAFTA Transitional Adjustment Assistance on March 11, 1999, applicable to all workers of Tony Lama Boot Company located in El Paso, Texas. The notice was published in the **Federal Register** on April 27, 1999 (64 FR 22649).

At the request of the State agency, the Department reviewed the certification for workers of the subject firm. The workers are engaged in the production of boots. New information shows that some workers separated from employment at Tony Lama Boot Company had their wages reported under a separate unemployment insurance (UI) tax account for Justin Boot Company, Justin Management Company.

Based on these findings, the Department is amending the certification to properly reflect this matter.

The intent of the Department's certification is to include all workers of Tony Lama Boot Company who were adversely affected by imports from Mexico.

The amended notice applicable to NAFTA–02821 is hereby issued as follows:

All workers of Tony Lama Boot Company, Justin Boot Company, Justin Management Company, El Paso, Texas who became totally or partially separated from employment on or after December 28, 1997 through March 11, 201 are eligible to apply for NAFTA–TAA under Section 250 of the Trade Act of 1974.

Signed at Washington, D.C. This 14th day of March, 2000.

Grant D. Beale,

Program Manager, Division of Trade Adjustment Assistance.

[FR Doc. 00–7118 Filed 3–21–00; 8:45 am]

BILLING CODE 4510–30–M

DEPARTMENT OF LABOR

Pension and Welfare Benefits Administration

[Application No. D–10720, et al.]

Proposed Exemptions: Standard & Poor's (S&P), Standard and Poor's Investment Advisory Service, LLC (SPIAS)

AGENCY: Pension and Welfare Benefits Administration, Labor.

ACTION: Notice of proposed exemptions.

SUMMARY: This document contains notices of pendency before the Department of Labor (the Department) of proposed exemptions from certain of the prohibited transaction restrictions of the Employee Retirement Income Security

Act of 1974 (the Act) and/or the Internal Revenue Code of 1986 (the Code).

Written Comments and Hearing Requests

All interested persons are invited to submit written comments or request for a hearing on the pending exemptions, unless otherwise stated in the Notice of Proposed Exemption, within 45 days from the date of publication of this **Federal Register** Notice. Comments and requests for a hearing should state: (1) The name, address, and telephone number of the person making the comment or request; and (2) the nature of the person's interest in the exemption and the manner in which the person would be adversely affected by the exemption. A request for a hearing must also state the issues to be addressed and include a general description of the evidence to be presented at the hearing.

ADDRESSES: All written comments and request for a hearing (at least three copies) should be sent to the Pension and Welfare Benefits Administration, Office of Exemption Determinations, Room N–5649, U.S. Department of Labor, 200 Constitution Avenue, NW, Washington, D.C. 20210. Attention: Application No.____, stated in each Notice of Proposed Exemption. The applications for exemption and the comments received will be available for public inspection in the Public Documents Room of the Pension and Welfare Benefits Administration, U.S. Department of Labor, Room N–5638, 200 Constitution Avenue, NW, Washington, DC 20210.

Notice to Interested Persons

Notice of the proposed exemptions will be provided to all interested persons in the manner agreed upon by the applicant and the Department within 15 days of the date of publication in the **Federal Register**. Such notice shall include a copy of the notice of proposed exemption as published in the **Federal Register** and shall inform interested persons of their right to comment and to request a hearing (where appropriate).

SUPPLEMENTARY INFORMATION: The proposed exemptions were requested in applications filed pursuant to section 408(a) of the Act and/or section 4975(c)(2) of the Code, and in accordance with procedures set forth in 29 CFR Part 2570, Subpart B (55 FR 32836, 32847, August 10, 1990). Effective December 31, 1978, section 102 of Reorganization Plan No. 4 of 1978, 5 U.S.C. App. 1 (1996), transferred the authority of the Secretary of the Treasury to issue exemptions of the type requested to the Secretary of Labor. Therefore, these notices of proposed exemption are issued solely by the Department.

The applications contain representations with regard to the proposed exemptions which are summarized below. Interested persons are referred to the applications on file with the Department for a complete statement of the facts and representations.

Standard & Poor's (S&P), Standard and Poor's Investment Advisory Services, LLC (SPIAS), Located in New York, New York

[Exemption Application No.: D–10720]

Proposed Exemption

The Department is considering granting an exemption under the authority of section 408(a) of the Act and section 4975(c)(2) of the Code and in accordance with the procedures set forth in 29 CFR Part 2570, Subpart B (55 FR 32836, 32847, August 10, 1990). If the exemption is granted, the restrictions of sections 406(a) and 406(b) of the Act and the sanctions resulting from the application of section 4975 of the Code, by reason of section 4975(c)(1)(A) through (F) of the Code, shall not apply to the provision of asset allocation services (the Service) by SPIAS to plan participants and the receipt of fees by SPIAS from Service Providers in connection with the provision of such asset allocation services, provided that the following conditions are met.

I. General Conditions

A. The retention of SPIAS to provide the Service will be expressly authorized in writing by an independent fiduciary of each Plan.

B. SPIAS shall provide the independent fiduciary of each Plan with the following, in writing:

(1) Prior to authorization, a complete description of the Service and disclosures of all fees and expenses associated with the Service.

(2) Any other reasonably available information regarding the Service that the independent fiduciary requests.

(3) A contract for the provision of the Service which defines the relationship between SPIAS, the Service Providers and the Plan sponsor, and the obligations thereunder. Such contract shall be accompanied by a termination form with instructions on the use of the form. The termination form must expressly state that a Plan may terminate its participation in the Service without penalty at any time. However, a Plan which terminates its participation in the Service before the expiration of the contract will pay its pro-rata share of the fees that it would otherwise owe for the Service under the contract and, if applicable, any direct costs actually incurred by SPIAS which would have been recovered from the Plan by SPIAS but for the termination of the contract, including any direct setup expenses not previously recovered. Thereafter, the termination form shall be provided no less than annually.

(4) At least 45 days prior to the implementation of any material change to the Service or increase in fees or expenses charged for the Service, notification of the change and an explanation of the nature and the amount of the change in the Service or increase in fees or expenses.

(5) A copy of the proposed and final exemption, if granted, as published in the **Federal Register**.

(6) An annual report of Plan activity which summarizes the performance of the Service and asset allocation recommendations and provides a breakdown of all fees and expenses paid by the Plan or participants for the year. Such reports shall be provided no more than 45 days after the period to which it relates. Upon the independent fiduciary's or Plan sponsor's request, such report may be provided more frequently.

C. SPIAS will provide each Plan participant with the following:

(1) Written notice that the Service is available and provided by SPIAS, an entity independent of the Service Provider and the Plan sponsor.

(2) Prior to using the Service, full written disclosures that will include information about SPIAS and a description of the Service.

(3) Access to SPIAS's website or paper-based communications which will clearly indicate that the Plan participant is receiving the Service from SPIAS, and that SPIAS is independent of the Service Provider.

(4) A risk tolerance questionnaire which must be completed prior to utilization of the Service.

D. Any investment advice given to a Plan participant by SPIAS under the Service will be based solely on the responses provided by the Plan participants through the Service's interactive computer program or through a paper or telephone interview and will be based on the application of an objective methodology developed by S&P Financial Information Service (S&P FIS) and the S&P Investment Committee.

E. Any investment advice given to a Plan participant will be implemented

only at the express direction of the Plan participant.

F. The total fees paid to SPIAS and a Service Provider, in connection with the provision of the Service, by each Plan does not exceed ''reasonable compensation'' within the meaning of section 408(b)(2) of the Act.

G. The only fees which are payable to SPIAS in connection with the provision of the Service include, subject to negotiation, one or more of the following:

(1) An annual flat fee based on a fixed dollar amount per Plan participant for the Service. This fee may be paid by the Plan, Plan sponsor, Plan participant or the Service Provider.

(2) A technology licensing fee payable by the Service Provider in the first year that the Service is provided to a Plan. The fee will be a fixed dollar amount based on the number of Plan participants and beneficiaries contained on the Service Provider's record-keeping system. Each time the number of Plan participants and beneficiaries on the Service Provider's record-keeping system increases by 10%, an additional fixed dollar amount based on the increase in Plan participants and beneficiaries will be assessed and charged to the Service Provider for the new participants and beneficiaries (the Revised Technology Fee).

(3) For subsequent years, SPIAS will charge the Service Provider an annual technology maintenance fee equal to 20% of the technology licensing fee charged to the Service Provider in the first year plus 20% of the Revised Technology Fee.

(4) SPIAS will charge the Plan or Plan sponsor an Internet customization fee where a Plan sponsor contracts directly with SPIAS for the provision of the Service. This flat fee will be based on the time spent by SPIAS personnel on its customization of the Service for the particular Plan.

(5) For those Plan sponsors electing to receive a Plan analysis report, an annual flat fee based on a fixed dollar amount per Plan investment analysis report. This fee will be paid by the Plan sponsor or Service Provider.

H. No portion of any fee or other consideration payable by the Plans or the Plan sponsor to S&P or SPIAS in connection with the Service will be received or shared with a Service Provider.

I. Neither the fees charged nor the compensation received by SPIAS will be affected by the investment elections or the decisions made by the Plan participants and beneficiaries regarding investment of the assets in their accounts.

J. All dealings between the Service Provider and the Plans participating in the Service are on a basis no less favorable to the Plans than dealings with other investors of the Service Provider.

K. All asset allocations are reviewed and approved by the S&P Investment Policy Committee (IPC) before they are made available to the Plan.

L. No Service Provider will at any time own any interest, by vote or value in SPIAS, and neither SPIAS nor any affiliate will own any interest, by vote or value in a Service Provider.

M. The annual revenues derived by SPIAS from any one Service Provider shall not constitute more than 5% of the annual revenues of S&P FIS.

N. S&P will guarantee the payment of any liabilities of SPIAS that may arise by reason of a breach of a fiduciary duty described in section 404 of the Act or a violation of the prohibited transaction provisions in section 406 of the Act and 4975 of the Code.

O. SPIAS will maintain for a period of six years, the records necessary to enable the persons described in paragraph (P) of this section to determine whether the conditions of the exemption are met, including records of the recommendations made to Plan participants and beneficiaries and their investment choices, except that—

(1) A prohibited transaction will not be considered to have occurred if, due to circumstances beyond the control of SPIAS, the records are lost or destroyed prior to the end of the six year period.

(2) No party in interest, other than SPIAS shall be subject to the civil penalty that may be assessed under section 502(i) of the Act, or the taxes imposed by section 4975(a) and (b) of the Code if records are not maintained or not available for examination as required by this paragraph and paragraph P(1) below.

P. (1) Except as provided in subparagraph (2) of this paragraph and notwithstanding any provisions of subsections (a)(2) and (b) of Section 504 of the Act, the records referred to paragraph (O) of this section are unconditionally available at their customary location for examination during normal business hours by—

(a) Any duly authorized employee or representative of the Department of Labor, the Internal Revenue Service, or the Securities and Exchange Commission;

(b) Any fiduciary of a participating Plan or any duly authorized representative of such fiduciary;

(c) Any contributing employer to any participating Plan, any duly authorized representative of such employer or an employee organization whose members are participants and beneficiaries of a participating Plan; or

(d) Any Plan participant or beneficiary of any participating Plan or any duly authorized representative of such Plan participant or beneficiary.

(2) None of the persons described in paragraph (1)(b)–(d) of this paragraph (P) shall be authorized to examine trade secrets of SPIAS, or commercial or financial information which is privileged or confidential.

II. Definitions

A. The term ''Service'' means the asset allocation service provided by SPIAS to Plans which is accessed through computer software and other written communications in order to provide personalized recommendations to Plan participants regarding the allocation of their investments among the options offered under their Plan.

B. The term ''Service Provider'' means an entity that has been in the financial services business for at least three years, and during such period, has not been found liable or guilty by a court of law, or has not been a party to a settlement agreement with the IRS or the Department related to any matter concerning an employee benefit plan, and which is described in one of the following categories:

(1) A bank, savings and loan association, insurance company or registered investment adviser which meets the definition of a ''qualified professional asset manager'' (QPAM) set forth in section V(a) of Prohibited Transaction Exemption 84–14 (49 Fed. Reg. 9494 (Mar. 13, 1984), as corrected at 50 Fed. Reg. 41430 (Oct. 10, 1985) and in addition, has, as of the last day of its most recent fiscal year, total client assets under management and control in an amount not less than $250 million; or

(2) A broker dealer registered under the Securities Exchange Act of 1934, which has, as of the last day of its most recent fiscal year, $1 million in shareholders' or partners' equity, and total client assets under management and control in an amount not less than $250 million.

C. The term ''independent fiduciary'' means a Plan fiduciary which is independent of SPIAS and its affiliates and independent of the Service Provider and its affiliates.

D. The term ''affiliate'' includes:

(1) Any person directly or indirectly through one or more intermediaries, controlling, controlled by, or under common control with the person;

(2) Any officer, director, employee, relative, or partner in any such person and

(3) Any corporation or partnership of which such person is an officer, director partner or employee.

E. The term ''control'' means the power to exercise a controlling influence over the management or policies of a person other than an individual.

Summary of Facts and Representations

1. McGraw-Hill Companies (McGraw-Hill) is a New York Stock Exchange registered company with a market capitalization of approximately $11 billion. Standard & Poors (S&P), a division of the McGraw-Hill Companies has provided the public with investment information and guidance for more than 130 years. Investors rely on Standard & Poor's Marketscope, Stock Reports, Stock Guide, Industry Surveys and other services for independent and accurate information. S&P is comprised of S&P Financial Information Services (S&P FIS) and S&P's Ratings Services. In 1998, S&P Ratings Services and S&P FIS had, in the aggregate, revenues of approximately $1.1 billion.

2. S&P Ratings Services provides timely, objective credit analysis and information, and has been rating conventional-term debt and general obligation corporate and municipal bonds since 1916. S&P Ratings Services serves more than 60 countries through a global office network staffed by local analysts from the world's major capital markets.

3. S&P FIS provides financial data, information and analysis on various domestic and foreign financial markets to individual investors, brokerage firms, investment advisors, money managers and other investment professionals. S&P FIS is also responsible for maintaining market indices such as the S&P 500 and provides various other products and services to the investment community.

4. McGraw-Hill established Standard & Poors Investment Advisory Services, LLC (SPIAS), a wholly-owned subsidiary in 1995. SPIAS was created as part of S&P FIS's expansion into the provision of personalized investment advice and related investment advisory activities, and is a registered investment adviser under the Investment Advisers Act of 1940. SPIAS furnishes a variety of services which can be broadly characterized as: (1) Internet-based personal advisory services; (2) advisory services aimed at enabling market professionals to provide services to retail clients; (3) asset allocation advisory services; (4) advisory consulting services; and (5) management of investment companies. The services that SPIAS operates include: S&P's Personal Wealth and S&P's Bank Investment Center. SPIAS has also been retained by the independent distributor of the product known as ''WEBS'' to provide investment and economic research describing prevailing international economic and currency related trends and their impact on investments in several countries.

SPIAS's income is included with S&P FIS for financial reporting purposes. In 1998, S&P FIS contributed approximately $600 million to McGraw-Hill's total $3.7 billion in revenues. Most employees of SPIAS are also employed by S&P FIS business units. To the extent that SPIAS's employees derive a portion of their compensation based on the financial performance of a business unit, the compensation is based on the overall performance of S&P FIS and or the relevant S&P FIS business unit.

5. The Applicant represents that the Service will be beneficial to Plan participants because the Service will integrate retirement planning recommendations and fund allocation recommendations, including current Plan savings, other retirement savings, personal retirement income goals, tolerance for risk, time horizon to retirement, and the fund choices specifically available in a participant's Plan.

The Applicant represents that the Service entails the provision of personalized asset allocation advice to Plan participants (see paragraph 7). Before a Plan's independent fiduciary may authorize the Plan's participation in the Service, SPIAS must provide the fiduciary with a complete description of the Service, written disclosures of all fees and expenses associated with the Service, and a written contract for the provision of the Service which defines the relationship between SPIAS, the Service Provider and the Plan sponsor and the obligations thereunder.[1] Such contract will be renewable annually and will include: (a) A provision under which the Plan shall have 45 days notice prior to implementation of any material change to the Service or any fee or expense increases in connection with the provision of the Service by SPIAS; and (b) a provision which states that a Plan may terminate its participation in the Service at any time without penalty. However, a Plan which terminates the Service before the expiration of the contract will be responsible for paying its pro-rata share of the fees otherwise owed under the contract as of the date of termination, and, if applicable, any direct costs actually incurred by SPIAS which would have been recovered from the Plan by SPIAS but for the termination of the contract, including any direct setup expenses not previously recovered. In addition, SPIAS shall provide such fiduciary with a copy of the proposed and the final exemption, if granted, as published in the **Federal Register**.

6. SPIAS will provide the Service either directly to Plan participants through an agreement with the Plan sponsor or through an agreement with the Service Providers sponsoring the investment vehicles offered to Plan participants.[2] Where the Service is contracted for directly with the Plan sponsor, SPIAS anticipates that these Plan sponsors will be predominately Fortune 500 companies, and SPIAS will customize the Service for each Plan. In many instances, SPIAS will need to coordinate with the Plan's record-keeper or another service provider in offering the Service to a Plan's participants.

[1] In this regard, the Department notes that the fiduciary responsibility provisions of the Act apply to the decision of a Plan's independent fiduciary to authorize the Plan's participation in the Service. Section 404 of the Act requires, among other things, that a fiduciary of a plan must act prudently, solely in the interest of the plan's participants and beneficiaries, and for the exclusive purpose of providing benefits to participants and beneficiaries. Accordingly, the Plan's independent fiduciary must act prudently when deciding to participate in the Service, and in considering the fees associated with the Service. The Department expects the Plan's independent fiduciary, prior to authorizing the Plan's participation in the Service, to understand fully the operation of the Service, and the compensation paid thereunder, following disclosure by SPIAS of all relevant information pertaining to the Service.

[2] The provision of investment advisory services to plans would be exempt from the prohibitions of section 406(a) of ERISA if the conditions of section 408(b)(2) are met. Section 2550.408b–2(a) of the Department's regulations provides that section 408(b)(2) of the Act exempts from the prohibitions of section 406(a), payment by a Plan to a party in interest, including a fiduciary for * * * any service (or combination of services) if (1) such * * * service is necessary for the establishment or operation of the Plan; (2) such * * * service is furnished under a contract or arrangement which is reasonable; and (3) no more than reasonable compensation is paid for such * * * service. The regulation also provides that section 408(b)(2) does not contain an exemption from acts described in section 406(b) even if such act occurs in connection with a provision of services that is exempt under section 408(b)(2). Section 2550.408b–2(e)(1) further provides that a fiduciary does not engage in an act described in section 406(b)(1) of the Act if the fiduciary does not use any of the authority, control or responsibility which makes such person a fiduciary to cause the Plan to pay additional fees for a service furnished by such fiduciary or to pay a fee for a service furnished by a person in which the fiduciary has an interest which may affect the exercise of such fiduciary's best judgement as a fiduciary. In general, whether a violation of section 406(b) occurs during the operation of an investment advisory program is an inherently factual matter. See Advisory Opinion 84–04 (January 4, 1984).

Such entities will be independent of SPIAS. All fees for the Service will be paid by the Plan sponsor or the Plan to SPIAS.

In the second situation, SPIAS will provide the Service to Plan participants pursuant to a contract that the Plan sponsor enters into with a Service Provider. In these instances, the fees for the Service will be based on a flat dollar amount per participant which will be paid to SPIAS by the Service Provider, the Plan, Plan sponsor or Plan participants. In addition, SPIAS will enter into a written agreement with the Plan sponsor defining the relationship of the Plan sponsor, SPIAS and the Service Provider.

7. The Applicant states that, once a Plan fiduciary has authorized its Plan's participation in the Service, Plan participants will receive notice that the Service is available and provided by SPIAS, an entity which is independent of the Service Provider. This notice will also state that when using the Service, a Plan participant is receiving services separate and apart from those provided by the Service Provider. Prior to utilizing the Service, Plan participants will receive full disclosures about SPIAS and the Service.

Plan participants will access the Service through the Internet, by written materials or by telephone interview. Each Plan participant will receive a risk tolerance questionnaire which must be completed prior to utilization of the Service. A Plan participant will answer a questionnaire which consists of ten to fifteen questions with three or four multiple choice answers per question. These questions enable a Plan participant to quantify his or her time horizon and risk tolerance. This questionnaire has been developed by S&P over the last five years based on actual use in 401(k) plans and similar investment programs. For those Plan participants who elect to receive their advice in paper form, the questionnaire will be provided via the human resources department of the plan sponsor. If the plan sponsor elects to use a telephone voice response unit, Plan participants will receive their questionnaire over the phone. The paper-based and telephone versions of the questionnaire will be scored by the Plan participant by categorizing his/her answers (as discussed below).

If a Plan participant elects to receive his/her advice through the Internet, the Plan participant will first access a website provided by the Service Provider or the Plan sponsor. There will be an electronic link from the Plan sponsor's or Service Provider's website to SPIAS's website where the questionnaire and investment advice is housed. In certain situations, this data may be housed on servers owned and operated by the Service Provider. The Applicant represents that SPIAS will always retain sole control over the content of the Service and the advice contained therein. SPIAS will regularly monitor the contents of the Service and the advice contained therein to ensure that it remains the product of the objective methodology developed by S&P FIS and the S&P Investment Committee (discussed below). It will be apparent to the Plan participant that SPIAS is the sole-provider of such advice.

For those Plan participants using the Internet, the completed questionnaire is scored by computer. For those Plan participants using the paper based or telephone based questionnaires, the scoring is done by the Plan participants using materials and instructions provided by SPIAS. Based on the score, the Plan participant is categorized into one of six investment recommendations. Each recommendation contains a description of the investor profile associated with such recommendation which a Plan participant can review to see if he or she feels that he or she has been correctly classified.

The advice provided to a Plan participant through the Service may only be implemented if it is expressly authorized in writing by the Plan participant. Plan participants are advised that the investment advice is valid for one year and that they need to repeat the questionnaire process in future years in order to receive updated recommendations. In this regard, Plan participants are informed that if they experience major life changes, they may need to repeat the questionnaire process more often than once a year. In connection with the Plan sponsor's annual renewal of the Service, Plan participants are strongly encouraged by SPIAS to complete a new questionnaire. SPIAS has built in an annual reminder that will be sent to all Plan participants concerning the need for them to update their Plan investment allocations. Plan participants are also notified if SPIAS' recommendations change during the year, and notified of the possible need to update their Plan investment allocations.

The Applicant states that the advice provided to Plan participants will be based on the application of an objective methodology, developed by S&P FIS and the S&P Investment Committee, in accordance with generally accepted investment theories. SPIAS will apply this methodology to the investment options offered by a plan and to the participant's investor profile classification which is based on his responses to the questionnaire.

8. The Applicant represents that its role in performing the Service on behalf of a Plan, includes gathering information about the investment options offered in a particular Plan, and developing a recommended portfolio for each investor type. The Applicant states that the analysis is based on modern portfolio theory and related work in economics and finance. S&P and SPIAS use the concept of efficient portfolios in developing asset allocation recommendations. This concept is based on the premise that the only way to achieve higher returns is to accept more risk and the only way to reduce risk is to accept lower potential returns. SPIAS states that in any set of investments, there is always a group of efficient portfolios, and an investor who holds an inefficient portfolio can improve his or her situation by moving to an efficient one.

SPIAS states that some analysts use market indexes rather than specific investment options because there is historical data available for most widely used market indexes. While a long historic record is always welcome, SPIAS believes that it is usually more important to know how a specific investment performed over the last 3, 5 or 10 years rather than how the market index performed. Accordingly, SPIAS develops its recommendations using the specific investment options wherever possible because Plan participants will be investing in these funds, not in an index or other measure.

9. In order to evaluate a specific investment option, SPIAS requires that a minimum of three years of monthly total return data be available. If this data is not available, SPIAS will work with the Plan sponsor to identify alternative data to assist SPIAS in its analysis. However, if there is no reasonable applicable data, SPIAS will not include the investment option in its recommendations. SPIAS may, however, include discussions and analysis of the investment option and its characteristics in separate supplemental materials provided to Plan participants and the Plan sponsor as part of the Service.

S&P and SPIAS will use the following standards to evaluate the investment options offered by the Plans which might use the Service:

(A) Evaluation at the Plan Level:

(1) *Sufficient Number of Funds:* If a Plan has more than five investment options that meet the requirements for investment options described below, the Plan satisfies this requirement. If there

are three, four or five investment options, S&P FIS and SPIAS will advise the Plan sponsor that consideration should be given to adding more investment options. If there are fewer than three acceptable investment options, S&P and SPIAS will decline to provide the Service to the Plan. If a Plan offers employer stock as an investment option, S&P and SPIAS will not consider this option in applying this test, nor in applying the other Plan level tests described in 2 and 3 below.

(2) *Diversity of Funds:* SPIAS's minimum building block for asset class coverage will be cash/bonds/stocks. This means that the minimal mix should include a money market fund, an investment grade bond fund and a diversified equity fund. A stable value fund or a GIC fund may be substituted for one of the fixed income funds. If these are present, S&P will permit a range of allocations where the lowest volatility allocation is equivalent to investing 90% of the funds in the money market fund and where the highest volatility allocation is equivalent to investing 90% of the funds in equities. If this range cannot be achieved, S&P and SPIAS will advise the Plan sponsor that adjustments should be made to widen the range of available allocations.

(3) *Limits on Timing and Investment Transfers:* The only limits on a Plan participant's ability to transfer funds among investment options should be those necessary to protect all Plan participants from excessive Plan expenses. In particular, Plan participants must be able to move funds from one investment option to another at least four times a year on no more than ten business days notice. If this is not possible, S&P and SPIAS will decline to provide the Service to the Plan. Second, there should be no restrictions on transferring funds from an investment option in one asset class to an investment option in another asset class. If this is not permitted, S&P and SPIAS will advise the Plan sponsor that these rules should be reviewed, and will decline to provide the Service under such circumstances.

(B) *Evaluation At the Fund Level:* S&P and SPIAS will review each fund in terms of the investment's return history, prospectus and size as described below.

(1) SPIAS will require three years of monthly total return history. If the investment option is a private fund with quarterly data, then five years of history will be required. All fund performances will be calculated according to industry standard procedures prescribed by the National Association of Securities Dealers and the Securities and Exchange Commission. Private fund performance will be calculated according to these procedures or according to Association for Investment Management and Research guidelines. Private funds with less than this amount of historical data will not be considered by S&P and SPIAS. If the investment option is an ''index fund,'' SPIAS may accept less performance data provided that sufficient information on fees is available to use the return data on the index to develop pro forma data on the fund. If the index is less than three years old, the index data cannot be used.

(2) A prospectus or written investment policy statement must be available to S&P and SPIAS.

(3) An investment fund's total net assets must be greater than $25 million for all share classes of the fund combined. If the investment option is a private fund offered by a money management firm, the firm must have at least $25 million in assets under management. Further, the firm must be at least three years old.

(4) If a Plan includes synthetic funds, such as a so-called ''funds of funds,'' that do not have the requisite performance history, S&P and SPIAS would apply its standard criteria as described above with respect to each fund component. Each fund component would have to satisfy the criteria in order for S&P and SPIAS to provide advice with respect to such synthetic fund.

(5) If the Plan includes employer stock, the stock may be included in the recommended allocations, subject to the policy on investing in employer stock approved by the IPC.

All data is entered into a computer program developed by SPIAS that estimates the efficient frontier and calculates various statistics that describe alternative asset allocations. Based on the results of this computer-based analysis, SPIAS will develop a series of at least six recommendations covering a range of risks.[3] In developing these allocations, the general guidelines that SPIAS uses include the following: Higher risk funds, such as equity sector funds, international funds or small cap stock funds are usually limited to the two or three riskiest portfolios. Employer stock may only be included in the riskiest or two riskiest portfolios, and may not have an allocation greater than 20% in any portfolio. SPIAS will not include employer stock if S&P's separately published recommendation on the stock has consistently been ''avoid or sell.''

If an investment option's performance declines or fails to meet expectations since the date of SPIAS's prior review, this will be recognized and considered by SPIAS in its updated annual review. As part of its annual review, SPIAS will initiate discussions with the Plan sponsor about replacing or adding an investment option if the circumstances warrant. If a Plan sponsor chooses not to drop an investment option or add options, SPIAS will not include the poorly performing investment option in its asset allocation advice or may decline to continue providing the Service to the Plan.

10. The Applicant represents that S&P's experience and expertise will be an integral part of the Service, and S&P will stand behind the investment advice provided by SPIAS through the Service, and will guarantee the payment of any liability of SPIAS that may arise by reason of a breach by SPIAS of a fiduciary duty described in section 404 of the Act or a violation of the prohibited transaction provisions of section 406 of the Act or section 4975 of the Code. The content of the advice contained in the Service is produced by S&P FIS's equity analytical department, and as described below, reviewed by the S&P Investment Policy Committee (IPC), (see representation number 11). The equity analytical department and the IPC operate independently of SPIAS and produce investment recommendations independent of any business relationships between S&P and its clients.

11. All asset allocation recommendations are reviewed by the IPC. The IPC is a senior committee responsible for oversight on all investment recommendations provided through all of S&P's products and services. Membership on the IPC includes the Senior Vice President for the S&P Investment Advisory Services unit (who is also the President of SPIAS), the Director of Equity Research, the Chief Economist, the Senior Sector Strategist, the Chief Technical Analyst, the Editor of S&P's *The Outlook* and senior analysts from the Portfolio Services and Quantitative Services departments of S&P. The IPC meets weekly to discuss current financial market conditions and the economy. Asset allocation plans are reviewed at the regular weekly meeting. Only after the analysis is completed and the recommendations have been reviewed by the IPC, or a subcommittee thereof, will the recommendations be considered as final and delivered to the Plan.

[3] Each Plan participant who completes the risk-tolerance questionnaire will be categorized, based on his/her score, into one of these six recommendations as discussed in paragraph 7.

Once the IPC completes its analysis and review, the recommendations are delivered to the Plan, and the Plan-specific asset allocation analysis is considered valid for one year. After a year, SPIAS will review and re-do the analysis and provide the Plan sponsor with revised recommendations. If the Plan sponsor does not continue its relationship with SPIAS, the recommendations will be withdrawn and will be unavailable to Plan participants. In those instances where Plan sponsors want the analysis reviewed more frequently than once per year, SPIAS and the Plan sponsor will negotiate a review schedule.

12. The Applicant represents that potential Service Providers will include banks and trust companies, mutual fund companies, brokerage firms and insurance companies. They will be required to meet minimum standards prior to participating in the provision of the Service. To qualify as a Service Provider, the entity must either be: (a) A commercial bank or trust company, savings and loan association, insurance company, or registered investment adviser which meets the definition of a ''qualified professional asset manager'' (QPAM) as set forth in Part V(a) of Prohibited Transaction Exemption 84–14 and has, as of the last day of its most recent fiscal year, total client assets under management and control in an amount of not less than $250 million; or (b) a broker-dealer regulated under the Securities Exchange Act of 1934 which had, as of the last day of its most recent fiscal year, $1 million in shareholders' or partners' equity, and total client assets under management and control in an amount of not less than $250 million.

In addition, the Applicant will evaluate each candidate and consider: (1) The availability of multiple investment options across a number of asset classes; (2) whether there are adequate service capabilities and service performance standards; with an ongoing adherence to those standards; (3) whether providing a bundled product [4] for defined contribution Plans is not the only financial service business in which the entity is involved; and (4) whether the entity, in SPIAS's view, has a high level of professionalism and accountability.

Further, the entity must have been in the financial services business for three years, and during such period, must not have been found liable or guilty by a court of law in any litigation, concerning an employee benefit plan, brought by the IRS or the Department, or a party to a settlement agreement with the IRS or the Department on any matter concerning an employee benefit plan.

13. The fees which are payable to SPIAS in connection with providing the Service, subject to negotiation, are limited to one or more of the following fees. A technology licensing fee will be charged to the Service Provider. This fee is a one-time fee charged in the first year the Service is provided to a Plan based on the number of Plan participants contained on a Service Provider's record-keeping system. Each time the number of Plan participants and beneficiaries on the Service Provider's record-keeping system increases by 10%, an additional amount based on a flat dollar per Plan participant will be assessed and charged to the Service Provider for the new participants (the Revised Technology Fee). For subsequent years, SPIAS will charge a Service Provider a technology maintenance fee equaling 20% of the first year's technology licensing fee plus 20% of the Revised Technology Fee.

Where a Plan sponsor contracts directly with SPIAS to customize the Service to its particular Plan, SPIAS will charge an Internet customization fee to the Plan or the Service Provider. This flat fee is based on the time spent by SPIAS personnel on its customization of the Service to a particular Plan. In addition, SPIAS will charge an annual flat fee based on a fixed dollar amount per Plan participant which may be paid by the Plan, Plan sponsor, the Plan participants or the Service Provider.

Finally, SPIAS will also offer a Plan investment analysis report to Plan sponsors. This report is separate from the investment analysis advice provided to Plan participants and is optional. SPIAS will analyze the Plan and its investment options comparing the rates of return earned by the Plan's investment options relative to other available funds. For those Plan sponsors who elect to receive a Plan investment analysis by SPIAS, SPIAS will charge a Plan investment analysis fee based on a flat dollar amount per year. This fee may be paid by the Plan, Plan sponsor or the Service Provider.

14. In summary, it is represented that the proposed transaction will satisfy the statutory criteria for an exemption under section 408(a) of the Act because:

(a) Participation in the Service will be expressly authorized in writing by an independent fiduciary.

(b) SPIAS will provide the independent fiduciary of each Plan with, written disclosures describing the Service and all fees and expenses associated with the Service, a written contract for the provision of the Service, a copy of the proposed and final exemption, if granted, and a summary of annual Plan activity and expense reports.

(c) SPIAS will furnish the Plan participants with the following: notice that the Service is provided by SPIAS, an entity that is independent from the Service Provider and the Plan sponsor; and full disclosure about the Service and SPIAS; and a risk tolerance questionnaire.

(d) Any investment advice given to Plan participants will be based on the Plan participants' responses to the questionnaire and any investment advice will only be implemented at the express direction of the Plan participant.

(e) The total fees paid to SPIAS and a Service Provider by each Plan participant participating in the Service does not exceed reasonable compensation within the meaning of section 408(b)(2) of the Act.

(f) No portion of any fee or other consideration paid to SPIAS or S&P in connection with the Service will be shared or received by a Service Provider.

(g) Neither the fees charged nor the compensation received by SPIAS will be affected by the investment elections of Plan participants.

(h) Participation in the Service will not cause the Plan to pay any additional fees or commissions with respect to acquisition or disposition of investments offered under the Plan.

(i) All asset allocations are reviewed and approved by the IPC before they are delivered to the Plan.

(j) No Service Provider will own any interest in SPIAS, and neither SPIAS nor any affiliate will own any interest in a Service Provider.

(k) The annual revenues derived by SPIAS from any one Service Provider shall not be more than 5% of the annual revenues of S&P FIS.

(l) S&P will guarantee the payment of any liability of SPIAS that may arise by reason of a breach of a fiduciary duty described in section 404 of the Act or a violation of the prohibited transaction provisions in section 406 of the Act or section 4975 of the Code.

Notice to Interested Persons

The Applicant represents that because potentially interested Plan participants and beneficiaries cannot be identified at this time, the only practical means of notifying such Plan participants and beneficiaries of this proposed exemption is by publication in the

[4] Bundled products provide employers with record-keeping, legal, administrative, trust, educational, investment, *etc.*, service with respect to establishing and maintaining a plan.

Federal Register. Therefore, comments and requests for a hearing must be received by the Department not later than April 21, 2000.

FOR FURTHER INFORMATION CONTACT: Allison Padams Lavigne, U.S. Department of Labor, (202) 219–8971. (This is not a toll free number.)

Texas Iron Workers and Employers Apprenticeship Training and Journeyman Upgrading Fund (the Plan), Located in San Antonio, Texas

[Application No. D–10777]

Proposed Exemption

The Department is considering granting an exemption under the authority of section 408(a) of the Act and in accordance with the procedures set forth in 29 CFR Part 2570, Subpart B (55 FR 32836, 32847, August 10, 1990). If the exemption is granted, the restrictions of sections 406(a), 406(b)(1) and (b)(2) of the Act shall not apply to the purchase of a classroom/office building (the Classroom Building) and a shop building (the Shop Building; together, the Buildings) and an adjacent lot (the Adjacent Lot) by the Plan from Local Union No. 66 of the International Association of Bridge, Structural, Ornamental and Reinforcing Iron Workers (the Union), for $63,000, provided that: (a) The purchase is a one-time transaction for cash, and no commissions are paid by the Plan with respect to the transaction; (b) the Plan pays a price for the Buildings and the Adjacent Lot (collectively, the Properties) that is no more than the fair market value of the Properties at the time of the transaction, as determined by a qualified, independent appraiser; (c) the Plan's independent fiduciary has determined that the transaction is appropriate for the Plan and in the best interests of the Plan and its participants and beneficiaries; and (d) the Plan's independent fiduciary monitors the purchase of the Properties by the Plan and takes whatever action is necessary to safeguard the interests of the Plan and its participants and beneficiaries.

Summary of Facts and Representations

1. The Plan is a multi-employer apprenticeship plan with approximately 300 participants and beneficiaries. It is a state-wide training program for training apprentice iron workers and upgrading the skills of experienced iron workers. The Plan has three Union trustees and three management trustees. As of March 31, 1999, the Plan had total assets with an estimated fair market value of $1,197,307.

2. The Properties consist of a land parcel of approximately 21,750 square feet, located at 4318 Clark Avenue, San Antonio, Texas, containing the Buildings—the Classroom Building and the Shop Building. The Shop Building is a one-story, steel-frame structure on a concrete slab containing 2,420 square feet. The Shop Building was built in 1971. The Classroom Building is also a one-story, steel-frame structure on a concrete slab containing 4,004 square feet. It contains four classrooms, two offices, a storage room, a reception area and bathrooms, and was completed in 1972–1973. The Plan incurred approximately $45,000 of costs relating to the construction of the Classroom Building. The Union has maintained ownership of the Properties and has paid all property taxes associated therewith. The Plan has been responsible for maintaining the Classroom Building, including the landscaping, plumbing and security.

3. The Properties are part of a larger parcel (the Property), which has been owned by the Union since 1966. In addition to the Classroom and the Shop Buildings, the Property contains the Union headquarters building at the front of the Property and five empty lots at the rear.

4. The Union has decided to relocate its headquarters to a larger building with more office space and sell the subject Properties. However, the Plan's Trustees do not wish to relocate the San Antonio training operations provided for under the terms of the Plan. Therefore, the Plan would like to purchase the Buildings for training purposes and the Adjacent Lot for additional parking. This transaction will allow the Plan to continue its apprenticeship and training programs at their current location. The applicants have requested an exemption to permit only the sale of the Adjacent Lot and the Shop Building by the Union to the Plan.[5] In this regard, the transaction will also formally recognize that the Plan is and has been the formal owner of the Classroom Building since it was constructed in 1973. The applicants represent that the Plan is the equitable owner of the Classroom Building because it incurred the costs of constructing and maintaining the Classroom Building as described in Representation 2, above.

5. The Plan retained Courtland Partners, Ltd. (Courtland) of Cleveland, Ohio to review the subject transaction. With respect to Courtland's qualifications to review the subject transaction, Courtland represents that it is a registered investment adviser under the Investment Advisers Act of 1940 and currently manages over $100 million of real estate investments on behalf of its pension fund clients. Additionally, Courtland has retainer relationships with pension fund clients with real estate investments exceeding well over $1 billion. Mr. Michael J. Humphrey (Mr. Humphrey) is the principal officer at Courtland responsible for the review of the subject transaction. Mr. Humphrey represents that he has personally evaluated well over $400 million of acquisitions and dispositions as an adviser/fiduciary on behalf of pension fund clients. Mr. Humphrey further represents that Courtland had no prior relationship or arrangement with either the Union or the Plan before being retained to perform its review function for the Plan with respect to the subject transaction.

6. Mr. Adolph A. Ramirez (Mr. Ramirez), an independent real estate appraiser in San Antonio, Texas, has appraised the Adjacent Lot and the Shop Building as having a fair market value of $63,000, as of October 20, 1998. Mr. Ramirez's appraisal relied primarily on the market approach to value the Adjacent Lot and the Shop Building, with an analysis of recent sales of similar properties.

Mr. Humphrey represents that Courtland has reviewed all of the terms and conditions of the proposed purchase of the Shop Building and the Adjacent Lot by the Plan, has considered the history of the arrangements made between the Union and the Plan, and the appraisal of the Properties completed by Mr. Ramirez. Mr. Humphrey states that Mr. Ramirez's appraisal has considered all of the factors necessary to accurately determine the fair market value of the Shop Building and the Adjacent Lot. Mr. Humphrey has determined, as of May 7, 1999, that the purchase price of $63,000 for the Adjacent Lot and the Shop Building is reasonable. Furthermore, Courtland believes that the Classroom Building's value should not be included in the sales price for determining the appropriate consideration to be paid by the Plan since the understanding of the parties was that the Classroom Building was already effectively owned by the Plan (see Representation 2, above).

7. The Plan has retained Mr. Thomas W. Hatfield (Mr. Hatfield), a Certified Public Accountant (CPA) in North Richland Hills, Texas, to act as an independent fiduciary with respect to the proposed transaction. Mr. Hatfield has served as an auditor and adviser to the Plan since its inception. Mr. Hatfield represents that he does not perform any accounting or other work for the Union and is not related to, or affiliated with, any person who is a party in interest with respect to the Plan. Mr. Hatfield states that he has been a CPA since 1978 and has concentrated on audits of not-for-profit organizations during his career. Mr. Hatfield states that he will obtain, if necessary, expert advice from an experienced ERISA counsel as to what is required to properly execute the duties of an independent fiduciary for the Plan. Mr. Hatfield acknowledges and accepts his duties, responsibilities and liabilities as a fiduciary under the Act.

After consideration of the proposed transaction, Mr. Hatfield has determined that the proposed transaction would be appropriate for the Plan and in the best interests of the Plan's participants and beneficiaries. As the Plan's independent fiduciary, Mr. Hatfield will monitor the parties' compliance with the terms and conditions of the proposed transaction. Mr. Hatfield represents that he will take whatever action is necessary to safeguard the interests of the Plan and its participants and beneficiaries. In this regard, Mr. Hatfield will ensure that the sales price paid by the Plan for the Shop Building and the Adjacent Lot will in no way reflect any additional consideration for the Classroom Building. In addition, Mr. Hatfield will ensure that the current appraisal of the Shop Building and the Adjacent Lot is updated at the time of the transaction and that the Plan pays no more

[5] The applicants previously sought relief for the transaction which is the subject of this proposed exemption, but that request was denied by the Department because, among other reasons, the Plan had not been represented by an independent fiduciary at the time the sale transaction took place. The applicants represent that they have paid the civil sanction for such transaction under section 502(i) of the Act as agreed upon with the Department, reversed the transaction, and have now re-applied for the relief proposed herein.

than the fair market value of such Properties at that time.

8. Mr. Hatfield represents that the Plan's acquisition of the Shop Building and the Adjacent Lot for $63,000 in cash will not adversely affect the Plan's ability to meet all of its current expenses after the proposed transaction. Thus, Mr. Hatfield states that the transaction will not adversely affect the Plan's liquidity needs.

Mr. Hatfield states further that the Properties are suitable facilities for the Plan to continue carrying out its apprenticeship and training programs. Accordingly, Mr. Hatfield concludes that the purchase of the Properties by the Plan would be a prudent transaction, and in the best interest of the Plan, since the Plan needs to continue to use this site as a training facility.

9. In summary, the applicants represent that the proposed transaction satisfies the criteria of section 408(a) of the Act because: (a) The sale is a one-time transaction for cash, and no commissions will be paid by the Plan with respect to the sale; (b) the fair market value of the Properties being acquired by the Plan represent approximately 5% of the Plan's total assets; (c) the fair market value of the Adjacent Lot and the Shop Building have been determined by Mr. Ramirez, a qualified, independent appraiser, and such appraisal will be updated at the time of the transaction to ensure that the Plan pays no more than the fair market value for the Properties; (d) Courtland, an independent expert, has reviewed the terms of the proposed transaction and the most recent appraisal of the Properties, and has determined that such terms and appraisal are reasonable; (e) Mr. Hatfield, the Plan's independent fiduciary for purposes of the proposed transaction, has reviewed the terms and conditions of the proposed transaction and has determined that the transaction would be appropriate for the Plan and in the best interests of the Plan and its participants and beneficiaries; and (f) Mr. Hatfield will monitor the transaction, as the Plan's independent fiduciary, and will take whatever action is necessary to protect the interests of the Plan and its participants and beneficiaries.

FOR FURTHER INFORMATION CONTACT: Gary H. Lefkowitz of the Department, telephone (202) 219–8881. (This is not a toll-free number.)

Taylor M. Cole IRA Rollover (the IRA) Located in Deerfield, VA

[Application No. D–10859]

Proposed Exemption

The Department is considering granting an exemption under the authority of section 4975(c)(2) of the Code and in accordance with the procedures set forth in 29 C.F.R. Part 2570, Subpart B (55 FR 32836, 32847, August 10, 1990.) If the exemption is granted, the sanctions resulting from the application of section 4975 of the Code, by reason of section 4975(c)(1)(A) through (E) of the Code, shall not apply to the proposed sale of certain unimproved property (the Property) by the IRA to Taylor M. Cole, the IRA participant and a disqualified person with respect to the IRA; [6] provided that the following conditions are met:

(a) the sale is a one-time cash transaction;

(b) the IRA receives the current fair market value for Property, as established at the time of the sale by an independent qualified appraiser; and (c) the IRA pays no commissions or other expenses associated with the sale.

Summary of Facts and Representations

1. The IRA is an individual retirement account, as described in section 408(a) of the Code, which was established by Taylor M. Cole (Mr. Cole) on June 27, 1998. As of January, 2000, the IRA had approximately $261,165 in total assets. The Tredegar Trust Company, located in Richmond, Virginia, is the custodian of the IRA.

2. On July 27, 1998, the IRA purchased the Property from Richard and Ruth Mansfield, who were unrelated third parties, for $200,000 in cash. The Property represents over 80% of the IRA's total assets. The Property is adjacent to Mr. Cole's personal residence. It is represented that Mr. Cole made the decision to purchase the Property as a investment for the IRA.[7]

3. The Property is an approximately 176 acre parcel of unimproved land, located at 1352 Marble Valley Road, Deerfield, Virginia. The applicant represents that since the acquisition of the Property by the IRA, the Property has not been leased to or used by anyone, including any disqualified persons, as defined under section 4975(e)(2) of the Code. In addition, the Property has not generated any income for the IRA since its acquisition.[8]

4. The Property was appraised on March 25, 1999 (the Appraisal). The Appraisal was prepared by James H. Woods, RM (Mr. Woods), who is an independent Virginia state licensed real estate appraiser. Mr. Woods is with Blue Ridge Appraisal Company L.L.C.., which has offices in Staunton, Virginia and Winchester, Virginia. Mr. Woods relied primarily on the market approach, with an analysis of recent sales of similar properties in the geographic area. Mr. Woods determined that the Property had a fair market value of approximately $212,350, as of March 25, 1999.

Mr. Woods updated the Appraisal on February 22, 2000 (the Update). In the Update, Mr. Woods considered more recent sales of similar properties located near or adjacent to the Property as well as other circumstances relating to the proposed sale of the Property to Mr. Cole. Specifically, because the Property is adjacent to other property owned by Mr. Cole, Mr. Woods considered whether the adjacency factor merits a premium above fair market value in a sale of the Property to Mr. Cole. Mr. Woods states that the Property has no road frontage, no access easement or right of way, and can be accessed only by crossing over other property. Based on the Property's location, size and other factors, Mr. Woods concludes that combining the Property with property already owned by Mr. Cole will have no effect on the Property's fair market value. Therefore, Mr. Woods states that the fair market value of the Property remains at approximately $212,350, as of February 22, 2000.

5. The applicant proposes that Mr. Cole purchase the Property from the IRA in a one-time cash transaction. The applicant represents that the proposed transaction would be in the best interest and protective of the IRA because the IRA will be able to dispose of the Property at its fair market value and will not pay any commissions or expenses associated with the sale. In this regard, Mr. Cole will pay the IRA an amount in cash equal to the current fair market value at the time of the transaction, based on a further update of the Appraisal. The sale of the Property will increase the liquidity of the IRA's portfolio, will enable the trustees to diversify the assets of the IRA, and will enable the IRA to sell an illiquid non-income producing asset.

6. In summary, the applicant represents that the proposed transaction

[6] Pursuant to CFR 2510.3–2(d), there is no jurisdiction with respect to the IRA under Title I of the Act. However, there is jurisdiction under Title II of the Act pursuant to section 4975 of the Code.

[7] The Department notes that section 4975(c)(1) (D) and (E) of the Code prohibits the use by or for the benefit of a disqualified person of the assets of a plan and prohibits a fiduciary from dealing with the assets of a plan in his own interest or for his own account. Accordingly, to the extent there were violations of section 4975(c)(1) (D) and (E) of the Code with respect to the decision to purchase the Property for the IRA, the Department notes that this proposed exemption is providing no relief for such transaction.

[8] The Department notes that the Internal Revenue Service has taken the position that a lack of diversification of investments in a qualified plan may raise questions in regard to the exclusive benefit rule under section 401(a) of the Code. See, e.g., Rev. Rul. 73–532, 1973–2 C.B. 128. The Department further notes that section 408(a) of the Code, which describes tax qualifications provisions for IRAs, mandates that an IRA trust be created for the exclusive benefit of an individual and his or her beneficiaries. However, the Department is expressing no opinion in this proposed exemption regarding whether any violations of the Code have taken place with respect to the acquisition and holding of the Property by the IRA.

satisfies the statutory criteria of section 4975(c)(2) of the Code because:

(a) the sale will be a one-time cash transaction;

(b) the IRA will receive the current fair market value for the Property, as established at the time of the sale by an independent qualified appraiser;

(c) the IRA will pay no commissions or other expenses associated with the sale; and

(d) the sale will provide the IRA with more liquidity, will enable the IRA to diversify its assets, and will allow the IRA to reinvest the proceeds of the sale in other investments that potentially could yield greater returns.

Notice to Interested Persons

Because Mr. Cole is the sole participant of the IRA, it has been determined that there is no need to distribute the notice of proposed exemption to interested persons. Comments and requests for a hearing are due thirty (30) days from the date of publication of this notice in the **Federal Register**.

FOR FURTHER INFORMATION CONTACT: Ekaterina A. Uzlyan of the Department at (202) 219–8883. (This is not a toll-free number.)

Foodcraft, Inc. Defined Benefit Plan (the Plan), Located in Los Angeles, California

[Exemption Application No. D–10864]

Proposed Exemption

The Department is considering granting an exemption under the authority of section 408(a) of the Act and section 4975(c)(2) of the Code and in accordance with the procedures set forth in 29 CFR Part 2570, Subpart B (55 FR 32826, 32847, August 10, 1990). If the exemption is granted, the restrictions of sections 406(a) and 406(b)(1) and (b)(2) of the Act and the sanctions resulting from the application of section 4975 of the Code, by reason of section 4975(c)(1)(A) through (E) of the Code, shall not apply to the cash sale (the Sale) of certain improved real property (the Property) by the Plan to the trustees of the Plan, Ernest Lieblich and Caryl Lieblich (collectively, the Trustees), parties in interest and disqualified persons with respect to the Plan, provided that the following conditions are met:

(a) All terms and conditions of the Sale are no less favorable to the Plan than those which the Plan could obtain in an arm's length transaction with an unrelated party;

(b) The Trustees will purchase the Property from the Plan for the greater of $315,000 or the Property's fair market value as of the date of the transaction as determined by a qualified, independent appraiser;

(c) The Sale will be a one-time transaction for cash; and

(d) The Plan will pay no fees or commissions in connection with the Sale.

Summary of Facts and Representations

1. Foodcraft, Inc. (Foodcraft), a California corporation, is the sponsor of the Plan which is a defined benefit plan located in Los Angeles, California. The Plan has forty seven (47) participants, and approximately $3,582,286 in total assets as of January 1, 1998. The trustees of the Plan are Ernest Lieblich and Caryl Lieblich (collectively, the Trustees).

2. The Property, located at 1625 Riverside Drive, consists of lots 184 & 206 and those portions of lots 185, 186, 204 & 205 of tract 5963 in Los Angeles, California.

3. The Property was acquired by the Plan from the Trustees for $165,000 on February 29, 1984. On November 3, 1982, an appraisal of the Property was performed by an independent appraiser, Gail A. Anderson, which determined that the fair market value of the Property, exclusive of improvements, was $303,220. The acquisition of the Property was executed pursuant to an exemption granted by the Department, Prohibited Transaction Exemption (PTE) 83–159 (48 FR 44948, September 30, 1983).

4. The Property has generated rental income (the Rental Income) for the Plan as a result of leasing said Property to the Trustees, who in turn, subleased it to Foodcraft from November 8, 1983 until November 8, 2013.[9] In this regard, the Plan has received Rental Income totaling $496,521. The applicants represent that the Plan has not incurred any expenses as a result of the Plan's ownership of the Property.

5. The applicants represent that the Plan was audited by the Internal Revenue Service (IRS) in 1992. The audit disclosed the Trustees' failure to obtain periodic appraisals of the Property and requisite rent adjustments as mandated by PTE 83–159.[10] The IRS noted that prohibited transactions occurred and that they have been corrected. Accordingly, Form 5330 excise tax returns were filed by the Trustees and the excise tax was remitted to the IRS.

Furthermore, the Department conducted its own investigation of the prohibited transactions. In this regard, on November 24, 1992, Foodcraft reimbursed the Plan $45,000 for five years of adjusted rent and $4,500 in interest. By letter dated April 19, 1993, the Department concluded that the prohibited transactions have been corrected and the funds restored to the Plan. A subsequent audit by the IRS was conducted in 1997. In that audit, the IRS concluded that the Trustees complied with the exemption.[11]

6. The Property was appraised on April 5, 1999 by Ronald L. Macksoud (Mr. Macksoud) for Babcock Abelmann & Associates, an appraisal company independent of the Plan and the Trustees. Mr. Macksoud, a California certified real estate appraiser, used the direct sales comparison approach to evaluate the fair market value of the Property. Based on this approach, Mr. Macksoud represents that the fair market value of the Property, as of April 5, 1999, was $315,000.

7. The Trustees propose to purchase the Property for a cash price of $315,000. It is represented that the Sale is administratively feasible in that it will be a one-time transaction for cash in which the Plan will pay no fees or commissions. It is also represented that the Sale is in the best interest of the Plan since it allows the Plan to disgorge an illiquid asset to be replaced by conventional investments, e.g. money instruments and securities. This would improve the Plan's liquidity and ability to meet its obligation for payment of benefits. In addition, the Plan will no longer be involved in the enforcement of its leasehold interest under the lease, which sets forth the rights of the parties for the next fourteen years.

8. In summary, the Trustees represent that the proposed transaction meets the statutory criteria of section 408(a) of the Act because:

(a) The terms and conditions of the Sale are at least as favorable to the Plan as those obtainable in an arm's length transaction with an unrelated party;

(b) The Trustees will purchase the Property from the Plan for the greater of $315,000 or the Property's fair market value as of the date of the transaction as

[9] PTE 83–159 also provided exemptive relief for the subsequent lease of the Property by the Plan to the Trustees.

[10] Specifically, in the Proposal to PTE 83–159, 48 FR 35740 (August 5, 1983), line item ''3.'' of the ''Summary of Facts and Representations,'' provides that, ''[t]he rental rent will be adjusted periodically, but at a minimum of every three years, as determined by an independent appraiser, to the greater of 10% of the fair market value of the property, or the fair market rental value of the property.'' (48 FR at 35741).

[11] In this regard, the Department is not offering any opinion as to the continued availability of PTE 83–159 for the period beginning 1992, when the Trustees' failed to obtain an appraisal of the Property to determine the fair market rental value, to the present.

determined by a qualified, independent appraiser;

(c) The proposed transaction is a one-time transaction for cash; and

(d) The Plan will pay no fees or commissions associated with the proposed Sale.

FOR FURTHER INFORMATION CONTACT: J. Martin Jara, U.S. Department of Labor, telephone (202) 219–8883. (This is not a toll-free number.)

General Information

The attention of interested persons is directed to the following:

(1) The fact that a transaction is the subject of an exemption under section 408(a) of the Act and/or section 4975(c)(2) of the Code does not relieve a fiduciary or other party in interest or disqualified person from certain other provisions of the Act and/or the Code, including any prohibited transaction provisions to which the exemption does not apply and the general fiduciary responsibility provisions of section 404 of the Act, which, among other things, require a fiduciary to discharge his duties respecting the plan solely in the interest of the participants and beneficiaries of the plan and in a prudent fashion in accordance with section 404(a)(1)(b) of the Act; nor does it affect the requirement of section 401(a) of the Code that the plan must operate for the exclusive benefit of the employees of the employer maintaining the plan and their beneficiaries;

(2) Before an exemption may be granted under section 408(a) of the Act and/or section 4975(c)(2) of the Code, the Department must find that the exemption is administratively feasible, in the interests of the plan and of its participants and beneficiaries, and protective of the rights of participants and beneficiaries of the plan;

(3) The proposed exemptions, if granted, will be supplemental to, and not in derogation of, any other provisions of the Act and/or the Code, including statutory or administrative exemptions and transitional rules. Furthermore, the fact that a transaction is subject to an administrative or statutory exemption is not dispositive of whether the transaction is in fact a prohibited transaction; and (4) The proposed exemptions, if granted, will be subject to the express condition that the material facts and representations contained in each application are true and complete, and that each application accurately describes all material terms of the transaction which is the subject of the exemption.

Signed at Washington, DC, this 17th day of March, 2000.

Ivan Strasfeld,

Director of Exemption Determinations, Pension and Welfare Benefits Administration, Department of Labor.

[FR Doc. 00–7113 Filed 3–21–00; 8:45 am]

BILLING CODE 4510–29–P

NATIONAL AERONAUTICS AND SPACE ADMINISTRATION

[Notice (00–027)]

NASA Advisory Council (NAC), Task Force on International Space Station Operational Readiness; Meeting

AGENCY: National Aeronautics and Space Administration.

ACTION: Notice of meeting.

SUMMARY: In accordance with the Federal Advisory Committee Act, Pub. L. 92–463, as amended, the National Aeronautics and Space Administration announces an open meeting of the NAC Task Force on International Space Station Operational Readiness (IOR).

DATES: Wednesday, April 5, 2000, 12 p.m.–1 p.m. Eastern Standard Time.

ADDRESSES: NASA Headquarters, 300 E Street, SW, Room 7W31, Washington, DC 20546.

FOR FURTHER INFORMATION CONTACT: Mr. Philip Cleary, Code IH, National Aeronautics and Space Administration, Washington, DC 20546–0001, 202/358–4461.

SUPPLEMENTARY INFORMATION: This meeting will be open to the public up to the seating capacity of the room. The agenda for the meeting is as follows:

—Review the readiness of the Shuttle (STS–101) Mission (ISS assembly flight 2A.2A).

It is imperative that the meeting be held on this date to accommodate the scheduling priorities of the key participants. Visitors will be requested to sign a visitors register.

Dated: March 15, 2000.

Mathew M. Crouch,

Advisory Committee Management Officer, National Aeronautics and Space Administration.

[FR Doc. 00–7056 Filed 3–21–00; 8:45 am]

BILLING CODE 7510–01–M

NATIONAL ARCHIVES AND RECORDS ADMINISTRATION

Records Schedules; Availability and Request for Comments

AGENCY: National Archives and Records Administration (NARA).

ACTION: Notice of availability of proposed records schedules; request for comments.

SUMMARY: The National Archives and Records Administration (NARA) publishes notice at least once monthly of certain Federal agency requests for records disposition authority (records schedules). Once approved by NARA, records schedules provide mandatory instructions on what happens to records when no longer needed for current Government business. They authorize the preservation of records of continuing value in the National Archives of the United States and the destruction, after a specified period, of records lacking administrative, legal, research, or other value. Notice is published for records schedules in which agencies propose to destroy records not previously authorized for disposal or reduce the retention period of records already authorized for disposal. NARA invites public comments on such records schedules, as required by 44 U.S.C. 3303a(a).

DATES: Requests for copies must be received in writing on or before May 8, 2000. Once the appraisal of the records is completed, NARA will send a copy of the schedule. NARA staff usually prepare appraisal memorandums that contain additional information concerning the records covered by a proposed schedule. These, too, may be requested and will be provided once the appraisal is completed. Requesters will be given 30 days to submit comments.

ADDRESSES: To request a copy of any records schedule identified in this notice, write to the Life Cycle Management Division (NWML), National Archives and Records Administration (NARA), 8601 Adelphi Road, College Park, MD 20740–6001. Requests also may be transmitted by FAX to 301–713–6852 or by e-mail to records.mgt@arch2.nara.gov. Requesters must cite the control number, which appears in parentheses after the name of the agency which submitted the schedule, and must provide a mailing address. Those who desire appraisal reports should so indicate in their request.

FOR FURTHER INFORMATION CONTACT: Marie Allen, Director, Life Cycle Management Division (NWML), National Archives and Records Administration, 8601 Adelphi Road, College Park, MD 20740–6001. Telephone: (301)713–7110. E-mail: records.mgt@arch2.nara.gov.

SUPPLEMENTARY INFORMATION: Each year Federal agencies create billions of records on paper, film, magnetic tape,

and other media. To control this accumulation, agency records managers prepare schedules proposing retention periods for records and submit these schedules for NARA's approval, using the Standard Form (SF) 115, Request for Records Disposition Authority. These schedules provide for the timely transfer into the National Archives of historically valuable records and authorize the disposal of all other records after the agency no longer needs them to conduct its business. Some schedules are comprehensive and cover all the records of an agency or one of its major subdivisions. Most schedules, however, cover records of only one office or program or a few series of records. Many of these update previously approved schedules, and some include records proposed as permanent.

No Federal records are authorized for destruction without the approval of the Archivist of the United States. This approval is granted only after a thorough consideration of their administrative use by the agency of origin, the rights of the Government and of private persons directly affected by the Government's activities, and whether or not they have historical or other value.

Besides identifying the Federal agencies and any subdivisions requesting disposition authority, this public notice lists the organizational unit(s) accumulating the records or indicates agency-wide applicability in the case of schedules that cover records that may be accumulated throughout an agency. This notice provides the control number assigned to each schedule, the total number of schedule items, and the number of temporary items (the records proposed for destruction). It also includes a brief description of the temporary records. The records schedule itself contains a full description of the records at the file unit level as well as their disposition. If NARA staff has prepared an appraisal memorandum for the schedule, it too, includes information about the records. Further information about the disposition process is available on request.

Schedules Pending

1. Department of Defense, Office of the Inspector General (N1–509–00–6, 15 items, 15 temporary items). Correspondence files relating to administration, planning and management, auditing, investigations, and inspections. Also included are electronic copies of documents created using word processing and electronic mail.

2. Department of Defense, Defense Logistics Agency (N1–361–98–3, 5 items, 4 temporary items). Records relating to organization and functions evaluations, including Department of Defense Inspector General evaluation and audit records, General Accounting Office reports, and other evaluation records. Also included are electronic copies of documents created using electronic mail and word processing. Recordkeeping copies of master sets of evaluation policy development and implementation records are proposed for permanent retention.

3. Department of Energy, Pittsburgh Naval Reactors Office (N1–434–99–3, 18 items, 18 temporary items). Paper, electronic, and microform records relating to naval nuclear reactor research and the shipment of nuclear reactor materiel. Included are reports, correspondence, test records, bills of lading, escort logs, and radiological surveys. Also included are electronic copies of records created using electronic mail and word processing. Records relating to significant research and development projects were previously approved for permanent retention.

4. Department of Housing and Urban Development, Agency-wide (N1–207–99–1, 9 items, 3 temporary items). Audit case files, including correspondence, memoranda, work papers, and electronic copies of records created using electronic mail and word processing. Significant audit files will be evaluated for permanent retention on a case by case basis. Records proposed for permanent retention date from the period 1954–1977 and include files that relate to such matters as projects in small towns, equal housing opportunity programs, new community programs, and metropolitan and suburban development.

5. Department of Housing and Urban Development, Office of Federal Housing Enterprise Oversight (N1–543–00–1, 23 items, 22 temporary items). Records accumulated by the Office of Information Technology. Included are such records as electronic records systems used to maintain information concerning agency files in all media, information security program files, chronological files of correspondence with the Federal National Mortgage Association, financial submissions in paper and electronic formats from government-sponsored enterprises, files relating to the operation of agency local area networks, and an electronic system containing data on assets and liabilities of government-sponsored enterprises. Also included are electronic copies of records created using electronic mail and word processing. Agency directives, operating manuals, and other procedural issuances are proposed for permanent retention.

6. Department of Housing and Urban Development, Office of Federal Housing Enterprise Oversight (N1–543–00–2, 10 items, 7 temporary items). Records of the Office of General Counsel. Included are such records as an electronic tracking system used to check the status of ongoing projects and cases, legal opinions and subject files relating to routine or inconsequential matters, and electronic copies of documents created using electronic mail and word processing. Recordkeeping copies of significant legal opinions, subject files pertaining to substantive matters, and public rulemaking files are proposed for permanent retention.

7. Department of Housing and Urban Development, Office of Federal Housing Enterprise Oversight (N1–543–00–3, 2 items, 2 temporary items). Assessment calculation files relating to semi-annual assessments of government-sponsored enterprises for funds appropriated to the agency from Congress. Included are electronic copies of documents created using electronic mail and word processing.

8. Department of Housing and Urban Development, Office of Federal Housing Enterprise Oversight (N1–543–00–4, 7 items, 5 temporary items). Records of the Office of Policy Analysis and Research relating to the compensation received by government-supported enterprise executives and to requests for information concerning agency Notices of Proposed Rulemaking. Also included are electronic copies of documents created using electronic mail and word processing. Recordkeeping copies of subject files and quarterly reports to the Department of Housing and Urban Development are proposed for permanent retention.

9. Department of Justice, Federal Bureau of Prisons (N1–129–00–2, 4 items, 4 temporary items). Special Investigative Supervisor program records. Included are files on inmates requiring close observation, memoranda documenting incidental staff contact with released inmates, photographs of inmates, and electronic copies of documents created using electronic mail and word processing.

10. Department of Justice, Federal Bureau of Prisons (N1–129–00–6, 9 items, 9 temporary items). Case management records that include such files as inmate monitoring logs, paper and electronic pay records, telephone system records, listings of inmates housed separately from the general population, staff meeting minutes, and

victim and witness logs. Also included are electronic copies of documents created using electronic mail and word processing.

11. Department of Justice, Federal Bureau of Prisons (N1–129–00–9, 5 items, 5 temporary items). Records relating to health services, including documentation of staff exposure to blood-borne pathogens, information regarding continuing staff medical education, and data tracking the cost of medical care provided both inside and outside of the correctional facility. Also included are electronic copies of documents created using electronic mail and word processing.

12. Department of Justice, Federal Bureau of Prisons (N1–129–00–10, 3 items, 3 temporary items). Records relating to employee development consisting of files documenting instructors' teaching qualifications and memoranda of understanding relating to cooperative agreements with other Federal agencies and local or state governmental bodies. Also included are electronic copies of documents created using electronic mail and word processing.

13. Department of Justice, Federal Bureau of Prisons (N1–129–00–11, 13 items, 13 temporary items). Records relating to food service programs. Included are such records as menus, nutrition reports, staff meeting minutes, survey reports, training reports, work orders, requisitions, inspection forms, and meal receipts. Also included are electronic copies of documents created using electronic mail and word processing.

14. Department of Justice, Immigration and Naturalization Service (N1–85–99–3, 5 items, 1 temporary item). Draft decisions from 1954 released for public review prior to their adoption that do not reflect final decisions and do not include public comments. Proposed for permanent retention are such records as policy/subject correspondence files, 1957–1974, correspondence pertaining to agency policy, 1929–1944, and files relating to Hungarian refugee programs, 1956–1957.

15. Department of the Treasury, Office of the Assistant Secretary for Enforcement (N1–56–00–1, 2 items, 2 temporary items). Electronic copies of records created using word processing and electronic mail that are associated with intelligence reports that relate to the agency's Financial Crimes Enforcement Network. This schedule also increases the retention period for recordkeeping copies of these files, which were previously approved for disposal.

16. Department of the Treasury, Office of the Inspector General (N1–56–00–2, 20 items, 16 temporary items). Investigative and audit case files, legal opinion background files, litigation case files, Office of Counsel subject files, Inspector General subject files, and tracking systems for case files. Also included are electronic copies of documents created using electronic mail and word processing. Recordkeeping copies of legal opinions and significant investigative and audit case files are proposed for permanent retention.

17. Department of the Treasury, Office of the Comptroller of the Currency (N1–101–97–2, 8 items, 6 temporary items). Electronic systems relating to bank supervision activities. Included are inputs, outputs, master files, and system documentation for the Corporate Activities Information System, the Fair Housing Loan Data System, and the Shared National Credit System. The Institution Database, a centralized electronic information system relating to national banks, and the related system documentation are proposed for permanent retention.

18. Department of the Treasury, Bureau of the Public Debt (N1–53–00–1, 5 items, 5 temporary items). Records relating to personnel matters, including on-the-spot awards, personnel listings, Combined Federal Campaign authorizations, and applications for outstanding scholar programs. Also included are electronic copies of documents created using word processing and electronic mail.

19. Department of the Treasury, Bureau of the Public Debt (N1–53–00–2, 1 item, 1 temporary item). Employee exit clearance forms that pertain to staff separating from the agency.

20. Department of the Treasury, Bureau of the Public Debt (N1–53–00–3, 4 items, 3 temporary items). Records of the Office of the Commissioner relating to savings bonds, including correspondence, circulars, internal memorandums, and specimen security receipts. Also included are electronic copies of documents created using electronic mail and word processing. Recordkeeping copies of significant program files, including official issuances, press releases, and legal opinions, are proposed for permanent retention.

21. Environmental Protection Agency, Pesticides Program (N1–412–00–3, 3 items, 1 temporary item). Software associated with the Compliance Activity Tracking System (CATS). This electronic system contains data concerning state inspections of businesses that produce, sell, or use pesticides. The master data file for CATS and the supporting documentation for the system are proposed for permanent retention.

22. Federal Communications Commission, Compliance and Information Bureau (N1–173–98–7, 3 items, 3 temporary items). Records relating to public inquiries received by the agency's telephone call center and the responses given, including statistical reports.

23. Federal Communications Commission, Offices of the Chairman and Commissioners (N1–173–98–8, 11 items, 7 temporary items). Routine correspondence files including invitations and reference materials, staff calendars, travel schedules, working files, biographies, photographs, and speeches. Substantive correspondence and subject files of the Chairman and Commissioners and their calendars are proposed for permanent retention.

24. National Archives and Records Administration, Office of the Inspector General (N1–64–00–4, 5 items, 5 temporary items). Audit case files and investigative case files relating to agency programs, operations, procedures, external audits of contractors and grantees, and employee and Hotline complaints. Included are audit reports, correspondence, memoranda, investigative reports, notes, attachments, working papers, and electronic copies of documents created using electronic mail and word processing. Significant investigative case files will be evaluated for permanent retention on a case by case basis.

25. Tennessee Valley Authority, Offices of the Chairman and Board of Directors (N1–142–99–2, 4 items, 2 temporary items). Paper copies of records of the Chairman and Directors for which optical images have been created. Information that has been converted to optical images is proposed for permanent retention and will be transferred to the National Archives in a format that meets the requirements for archival records in effect at the time of transfer.

26. Tennessee Valley Authority, Office of the Inspector General (N1–142–99–5, 9 items, 7 temporary items). Records generated during audits of agency operations and investigations of alleged violations of regulations and laws and of fraud, waste, and abuse are proposed for disposal. Also included are electronic copies of documents created using electronic mail and word processing. Recordkeeping files pertaining to significant investigations and final reports of significant audits are proposed for permanent retention.

Dated: March 15, 2000.

Michael J. Kurtz,

Assistant Archivist for Record Services—Washington, DC.

[FR Doc. 00–7057 Filed 3–21–00; 8:45 am]

BILLING CODE 7515–01–P

NUCLEAR REGULATORY COMMISSION

Documents Containing Reporting or Recordkeeping Requirements: Office of Management and Budget (OMB) Review

AGENCY: Nuclear Regulatory Commission (NRC).

ACTION: Notice of the OMB review of information collection and solicitation of public comment.

SUMMARY: The NRC has recently submitted to OMB for review the following proposal for the collection of information under the provisions of the Paperwork Reduction Act of 1995 (44 U.S.C. Chapter 35).

1. Type of submission, new, revision, or extension: Extension.

2. The title of the information collection: 10 CFR part 110—Rules and Regulations for the Export and Import of Nuclear Equipment and Material.

3. The form number, if applicable: 3150–0036.

4. How often the collection is required: On occasion.

5. Who is required or asked to report: Any person in the U.S. who wishes to export or import nuclear material and equipment subject to the requirements of 10 CFR 110 or to export incidental radioactive material that is a contaminant of shipments of more than 100 kilograms of non-waste material using existing NRC general licenses.

6. An estimate of the number of responses: 100.

7. The estimated number of annual respondents: 125.

8. An estimate of the total hours needed annually to complete the requirement or request: reporting, 130 hours (1.3 hours per response); recordkeeping, 150 hours (1.2 hours per respondent). The total burden is 280 hours.

9. An indication of whether Section 3507(d), Pub. L. 104–13 applies: Not applicable.

10. Abstract: 10 CFR 110 provides application, reporting, and recordkeeping requirements for exports and imports of nuclear material and equipment subject to the requirements of a specific license or a general license and exports of incidental radioactive material. The information collected and maintained pursuant to 10 CFR 110 enables the NRC to authorize only imports and exports which are not inimical to U.S. common defense and security and which meet applicable statutory, regulatory, and policy requirements.

A copy of the supporting statement may be viewed free of charge at the NRC Public Document Room, 2120 L Street NW, (lower level), Washington, DC. OMB clearance requests are available at the NRC worldwide web site (http://www.nrc.gov/NRC/PUBLIC/OMB/index.html). The document will be available on the NRC home page site for 60 days after the signature date of this notice.

Comments and questions should be directed to the OMB reviewer listed below by April 21, 2000.

Erik Godwin, Office of Information and Regulatory Affairs (3150–0036), NEOB–10202, Office of Management and Budget,Washington, D.C. 20503.

Comments can also be submitted by telephone at (202) 395–3087.

The NRC Clearance Officer is Brenda Jo. Shelton, 301–415–7233.

Dated at Rockville, Maryland, this 15th day of March, 2000.

For the Nuclear Regulatory Commission.

Brenda Jo. Shelton,

NRC Clearance Officer, Office of the Chief Information Officer

[FR Doc. 00–7099 Filed 3–21–00; 8:45 am]

BILLING CODE 7590–01–P

NUCLEAR REGULATORY COMMISSION

Applications for Licenses to Export Nuclear Material

Pursuant to 10 CFR 110.70 (b)(3) ''Public notice of receipt of an application'', please take notice that the Nuclear Regulatory Commission has received the following application for an export license. Copies of the application are available electronically through ADAMS and can be accessed through the Public Electronic Reading Room (PERR) link <*http://www.nrc.gov/NRC/ADAMS/index.html*> at the NRC Homepage.

A request for a hearing or petition for leave to intervene may be filed within 30 days after publication of this notice in the **Federal Register**. Any request for hearing or petition for leave to intervene shall be served by the requestor or petitioner upon the applicant, the Office of the General Counsel, U.S. Nuclear Regulatory Commission, Washington DC 20555; the Secretary, U.S. Nuclear Regulatory Commission, Washington, DC 20555; and the Executive Secretary, U.S. Department of State, Washington, DC 20520.

In its review of the applications for licenses to export deuterium oxide (heavy water) as defined in 10 CFR part 110 and noticed herein, the Commission does not evaluate the health, safety or environmental effects in the recipient nation of the material to be exported. The information concerning the application follows.

NRC EXPORT LICENSE APPLICATION

Name of applicant date of application date received application No.	Description of material to be exported	Country of destination
Poco Graphite, Inc., 12/03/99; 01/18/00; XMAT0400.	Nuclear grade graphite, 680,385 kilograms for commercial, non-nuclear end use.	Various.

Dated this 16th day of March 2000 at Rockville, Maryland.

For the Nuclear Regulatory Commission.

Ronald D. Hauber,

Deputy Director, Office of International Programs.

[FR Doc. 00–7098 Filed 3–21–00; 8:45 am]

BILLING CODE 7590–01–P

NUCLEAR REGULATORY COMMISSION

[Docket Nos. 50–260, 50–296]

Tennessee Valley Authority; (Browns Ferry Nuclear Plant Units 2 and 3; Exemption

I

The Tennessee Valley Authority (TVA or the licensee) is the holder of Facility Operating License No. DPR–52 for operation of the Browns Ferry Nuclear Plant Unit 2 (BFN–2) and DPR–68 for Unit 3 (BFN–3). The licenses provide, among other things, that the licensee is subject to all rules, regulations, and orders of the U.S. Nuclear Regulatory Commission (Commission or NRC) now or hereafter in effect.

BFN–2 and BFN–3 are boiling-water reactors located in Limestone County, Alabama.

II

Title 10 of the *Code of Federal Regulations* (10 CFR), Section 50.54(o), requires that primary reactor containments for water-cooled power reactors be subject to the requirements of Appendix J to 10 CFR Part 50.

Appendix J specifies the leakage test requirements, schedules, and acceptance criteria for tests of the leak tight integrity of the primary reactor containment and systems and components which penetrate the containment. Option B, Section III.A requires that the overall integrated leak rate must not exceed the allowable leakage (La) with margin, as specified in the Technical Specifications (TS). The overall integrated leak rate, as specified in the 10 CFR Part 50, Appendix J definitions, includes the contribution from main steam isolation valve (MSIV) leakage. By letter dated September 28, 1999, as supplemented by letter dated February 4, 2000, the licensee has requested exemption from Option B, Section III.A, requirements to permit exclusion of MSIV leakage from the overall integrated leak rate test measurement.

Option B, Section III.B of 10 CFR Part 50, Appendix J requires that the sum of the leakage rates of all Type B and Type C local leak rate tests be less than the performance criterion (La) with margin, as specified in the TS. The licensee also requests exemption from this requirement, to permit exclusion of the MSIV contribution to the sum of the Type B and Type C tests.

The MSIV leakage effluent has a different pathway to the environment. It is not directed into the secondary containment and filtered through the standby gas treatment system as is other containment leakage. Instead, the MSIV leakage is directed through the main steam drain piping into the condenser and is released to the environment as an unfiltered ground level effluent. The licensee analyzed the MSIV leakage pathway for the increased leakage (from 46 scfh to 168 scfh), and the containment leakage pathway separately in a dose consequences analysis. The calculated radiological consequences of the combined leakages were found to be within the criteria of 10 CFR part 100 and GDC–19. The staff reviewed the licensee's analyses and found them acceptable as described in a safety analysis accompanying amendments to be issued concurrently with this exemption. By separating the MSIV leakage acceptance criteria from the overall integrated leak rate test criteria, and from the Type B and C leakage sum limitation, the BFN–2 and BFN–3 containment leakage testing program will be made more consistent with the limiting assumptions used in the associated accident consequences analyses. The amendments associated with this exemption will revise Technical Specification Surveillance Requirement 3.6.1.3.10 to limit the maximum allowable combined MSIV leakage to 150 scfm, which is less than the analytical limit of 168 scfm. Therefore, the staff finds the proposed exemptions from Appendix J to separate MSIV leakage from other containment leakage to be acceptable.

III

Pursuant to 10 CFR 50.12, the Commission may, upon application by any interested person or upon its own initiative, grant exemptions from the requirements of 10 CFR Part 50 when (1) The exemptions are authorized by law, will not present an undue risk to public health and safety, and are consistent with the common defense and security, and (2) When special circumstances are present. Special circumstances are present whenever, according to 10 CFR part 50.12(a)(2)(ii), ''Application of the regulation in the particular circumstances would not serve the underlying purpose of the rule or is not necessary to achieve the underlying purpose of the rule * * *''

The licensee's exemption request was submitted in conjunction with a TS amendment application to increase the allowable leak rate for MSIVs. (The proposed amendment will be issued concurrently with this exemption.) The exemption and amendments together would implement the recommendations of Topical Report NEDC–31858, ''BWR Report for Increasing MSIV Leakage Rate Limits and Elimination of Leakage Control Systems.'' The topical report was evaluated by the staff and accepted in a safety evaluation dated March 3, 1999. The special circumstances associated with MSIV leakage testing are fully described in the topical report. These circumstances relate to the monetary costs and personnel radiation exposure involved with maintaining MSIV leakage limits more restrictive than necessary to meet offsite dose criteria and control room habitability criteria.

The underlying purpose of the rule which implements Appendix J (*i.e.,* 10 CFR 50.54(o)) is to assure that containment leak tight integrity is maintained (a) As tight as reasonably achievable and (b) Sufficiently tight so as to limit effluent release to values bounded by the analyses of radiological consequences of design basis accidents. The staff has determined that the intent of the rule is not compromised by the proposed action.

IV

Accordingly, the Commission has determined that, pursuant to 10 CFR part 50.12, an exemption is authorized by law and will not present an undue risk to the public health and safety, and that there are special circumstances present, as specified in 10 CFR 50.12(a)(2). An exemption is hereby granted from the requirements of Sections III.A and III.B of Option B of Appendix J to 10 CFR part 50. The exemption allows exclusion of MSIV leakage from the overall integrated leak rate test measurement and from the sum of Type B and C test measurements used to determine compliance with TS surveillance requirements for containment integrity.

Pursuant to 10 CFR 51.32, the Commission has determined that the granting of this exemption will have no significant impact on the quality of the human environment (65 FR 10844).

This exemption is effective upon issuance and will be implemented prior to startup of Cycle 12 for Browns Ferry Unit 2 and prior to startup of Cycle 10 for Browns Ferry Unit 3.

Dated at Rockville, Maryland this 14th day of March 2000.

For the Nuclear Regulatory Commission.

John A. Zwolinski,

Director Division of Licensing Project Management, Office of Nuclear Reactor Regulation.

[FR Doc. 00–7100 Filed 3–21–00; 8:45 am]

BILLING CODE 7590–01–P

NUCLEAR REGULATORY COMMSSION

Public Meeting on 10 CFR Part 70; Standard Review Plan

AGENCY: Nuclear Regulatory Commission (NRC).

ACTION: Notice of Meeting.

SUMMARY: NRC will host a public meeting in Rockville, Maryland. The meeting will provide an opportunity for discussion of stakeholder comments on the revised Standard Review Plan (SRP) chapters that were made available during March and April 2000. The revised chapters can be reviewed on the internet at the following website: *http://techconf.llnl.gov/cgi-bin/library/=*&library=*

PURPOSE: This meeting will provide an opportunity to discuss any comments on the staff's recently revised SRP chapters.

DATES: The meeting is scheduled for Tuesday through Wednesday, April 18 and 19, 2000, from 9 A.M. to 4 P.M. The meeting is open to the public.

ADDRESSES: NRC's Auditorium at Two White Flint North, 11545 Rockville Pike, Rockville, Maryland. Visitor parking around the NRC building is

limited; however, the meeting site is located adjacent to the White Flint Station on the Metro Red Line.

FOR FURTHER INFORMATION CONTACT: Theodore S. Sherr, Office of Nuclear Material Safety and Safeguards, U.S. Nuclear Regulatory Commission, Washington, DC 20555, telephone: (301) 415–7190, e-mail tss@nrc.gov.

Dated at Rockville, Maryland this 16th day of March, 2000.

For the Nuclear Regulatory Commission.

Theodore S. Sherr,

Chief, Licensing and International Safeguards Branch, Division of Fuel Cycle Safety and Safeguards, NMSS.

[FR Doc. 00–7102 Filed 3–21–00; 8:45 am]

BILLING CODE 7590–01–P

NUCLEAR REGULATORY COMMISSION

Biweekly Notice; Applications and Amendments to Facility Operating Licenses Involving No Significant Hazards Considerations

I. Background

Pursuant to Public Law 97–415, the U.S. Nuclear Regulatory Commission (the Commission or NRC staff) is publishing this regular biweekly notice. Public Law 97–415 revised section 189 of the Atomic Energy Act of 1954, as amended (the Act), to require the Commission to publish notice of any amendments issued, or proposed to be issued, under a new provision of section 189 of the Act. This provision grants the Commission the authority to issue and make immediately effective any amendment to an operating license upon a determination by the Commission that such amendment involves no significant hazards consideration, notwithstanding the pendency before the Commission of a request for a hearing from any person.

This biweekly notice includes all notices of amendments issued, or proposed to be issued from February 26, 2000, through March 10, 2000. The last biweekly notice was published on March 8, 2000 (65 FR 12286).

Notice of Consideration of Issuance of Amendments to Facility Operating Licenses, Proposed No Significant Hazards Consideration Determination, and Opportunity for a Hearing

The Commission has made a proposed determination that the following amendment requests involve no significant hazards consideration. Under the Commission's regulations in 10 CFR 50.92, this means that operation of the facility in accordance with the proposed amendment would not (1) involve a significant increase in the probability or consequences of an accident previously evaluated; or (2) create the possibility of a new or different kind of accident from any accident previously evaluated; or (3) involve a significant reduction in a margin of safety. The basis for this proposed determination for each amendment request is shown below.

The Commission is seeking public comments on this proposed determination. Any comments received within 30 days after the date of publication of this notice will be considered in making any final determination.

Normally, the Commission will not issue the amendment until the expiration of the 30-day notice period. However, should circumstances change during the notice period such that failure to act in a timely way would result, for example, in derating or shutdown of the facility, the Commission may issue the license amendment before the expiration of the 30-day notice period, provided that its final determination is that the amendment involves no significant hazards consideration. The final determination will consider all public and State comments received before action is taken. Should the Commission take this action, it will publish in the **Federal Register** a notice of issuance and provide for opportunity for a hearing after issuance. The Commission expects that the need to take this action will occur very infrequently.

Written comments may be submitted by mail to the Chief, Rules Review and Directives Branch, Division of Freedom of Information and Publications Services, Office of Administration, U.S. Nuclear Regulatory Commission, Washington, DC 20555–0001, and should cite the publication date and page number of this **Federal Register** notice. Written comments may also be delivered to Room 6D22, Two White Flint North, 11545 Rockville Pike, Rockville, Maryland from 7:30 a.m. to 4:15 p.m. Federal workdays. Copies of written comments received may be examined at the NRC Public Document Room, the Gelman Building, 2120 L Street, NW., Washington, DC. The filing of requests for a hearing and petitions for leave to intervene is discussed below.

By April 21, 2000, the licensee may file a request for a hearing with respect to issuance of the amendment to the subject facility operating license and any person whose interest may be affected by this proceeding and who wishes to participate as a party in the proceeding must file a written request for a hearing and a petition for leave to intervene. Requests for a hearing and a petition for leave to intervene shall be filed in accordance with the Commission's ''Rules of Practice for Domestic Licensing Proceedings'' in 10 CFR part 2. Interested persons should consult a current copy of 10 CFR 2.714 which is available at the Commission's Public Document Room, the Gelman Building, 2120 L Street, NW., Washington, DC, and electronically from the ADAMS Public Library component on the NRC Web site, *http://www.nrc.gov* (the Electronic Reading Room). If a request for a hearing or petition for leave to intervene is filed by the above date, the Commission or an Atomic Safety and Licensing Board, designated by the Commission or by the Chairman of the Atomic Safety and Licensing Board Panel, will rule on the request and/or petition; and the Secretary or the designated Atomic Safety and Licensing Board will issue a notice of a hearing or an appropriate order.

As required by 10 CFR 2.714, a petition for leave to intervene shall set forth with particularity the interest of the petitioner in the proceeding, and how that interest may be affected by the results of the proceeding. The petition should specifically explain the reasons why intervention should be permitted with particular reference to the following factors: (1) The nature of the petitioner's right under the Act to be made a party to the proceeding; (2) the nature and extent of the petitioner's property, financial, or other interest in the proceeding; and (3) the possible effect of any order which may be entered in the proceeding on the petitioner's interest. The petition should also identify the specific aspect(s) of the subject matter of the proceeding as to which petitioner wishes to intervene. Any person who has filed a petition for leave to intervene or who has been admitted as a party may amend the petition without requesting leave of the Board up to 15 days prior to the first prehearing conference scheduled in the proceeding, but such an amended petition must satisfy the specificity requirements described above.

Not later than 15 days prior to the first prehearing conference scheduled in the proceeding, a petitioner shall file a supplement to the petition to intervene which must include a list of the contentions which are sought to be litigated in the matter. Each contention must consist of a specific statement of the issue of law or fact to be raised or controverted. In addition, the petitioner shall provide a brief explanation of the

bases of the contention and a concise statement of the alleged facts or expert opinion which support the contention and on which the petitioner intends to rely in proving the contention at the hearing. The petitioner must also provide references to those specific sources and documents of which the petitioner is aware and on which the petitioner intends to rely to establish those facts or expert opinion. Petitioner must provide sufficient information to show that a genuine dispute exists with the applicant on a material issue of law or fact. Contentions shall be limited to matters within the scope of the amendment under consideration. The contention must be one which, if proven, would entitle the petitioner to relief. A petitioner who fails to file such a supplement which satisfies these requirements with respect to at least one contention will not be permitted to participate as a party.

Those permitted to intervene become parties to the proceeding, subject to any limitations in the order granting leave to intervene, and have the opportunity to participate fully in the conduct of the hearing, including the opportunity to present evidence and cross-examine witnesses.

If a hearing is requested, the Commission will make a final determination on the issue of no significant hazards consideration. The final determination will serve to decide when the hearing is held.

If the final determination is that the amendment request involves no significant hazards consideration, the Commission may issue the amendment and make it immediately effective, notwithstanding the request for a hearing. Any hearing held would take place after issuance of the amendment.

If the final determination is that the amendment request involves a significant hazards consideration, any hearing held would take place before the issuance of any amendment.

A request for a hearing or a petition for leave to intervene must be filed with the Secretary of the Commission, U.S. Nuclear Regulatory Commission, Washington, DC 20555–0001, Attention: Docketing and Services Branch, or may be delivered to the Commission's Public Document Room, the Gelman Building, 2120 L Street, NW., Washington, DC, by the above date. A copy of the petition should also be sent to the Office of the General Counsel, U.S. Nuclear Regulatory Commission, Washington, DC 20555–0001, and to the attorney for the licensee.

Nontimely filings of petitions for leave to intervene, amended petitions, supplemental petitions and/or requests for a hearing will not be entertained absent a determination by the Commission, the presiding officer or the Atomic Safety and Licensing Board that the petition and/or request should be granted based upon a balancing of factors specified in 10 CFR 2.714(a)(1)(i)–(v) and 2.714(d).

For further details with respect to this action, see the application for amendment which is available for public inspection at the Commission's Public Document Room, the Gelman Building, 2120 L Street, NW., Washington, DC, and electronically from the ADAMS Public Library component on the NRC Web site, *http://www.nrc.gov* (the Electronic Reading Room).

Commonwealth Edison Company, Docket No. 50–237, Dresden Nuclear Power Station, Unit 2, Grundy County, Illinois

Date of amendment request: April 30, 1999.

Description of amendment request: The proposed amendment would revise the expiration date of the operating license to allow 40 years of operation from the original date of issuance.

Basis for proposed no significant hazards consideration determination: As required by 10 CFR 50.91(a), the licensee has provided its analysis of the issue of no significant hazards consideration, which is presented below:

Does the change involve a significant increase in the probability of occurrence or consequences of an accident previously evaluated?

The programs to detect incipient failures or degraded performance such as Inservice Inspection, Inservice Testing, and Environmental Qualification programs, for example, remain in place and unchanged. The thermal cycles and reactor vessel toughness are within the 40-year design margin and will remain within those margins for the total operating period proposed by the amendment. No equipment is added, modified, or removed as a result of this amendment. Therefore there is no increase in the probability of an occurrence. No changes are made to the assumptions on which the UFSAR accident and transient analyses are based. Therefore, there is no reason for an increase in the consequences of any of the analyzed conditions which could lead to an increase in Onsite or Offsite dose consequences.

Therefore, this proposed amendment does not involve a significant increase in the probability of occurrence of consequences of an accident previously evaluated.

Does the change create [the] possibility of a new or different kind of accident from any previously evaluated?

No systems, structures, or components are changed by this amendment. No procedures that operate, maintain, or surveil them are changed. No provisions of the license or the technical specifications are modified or relaxed.

Therefore, the proposed amendment does nor create the possibility of a new or different kind of accident from any previously evaluated.

Does the change involve a significant reduction in the margin of safety?

No assumptions are changed for any analysis as a result of this amendment. No system, structure, or component is changed by this amendment. This amendment does not change the results of accident and transient analyses previously evaluated.

Therefore, the proposed amendment does not involve a significant reduction in the margin of safety.

The NRC staff has reviewed the licensee's analysis and, based on this review, it appears that the three standards of 10 CFR 50.92(c) are satisfied. Therefore, the NRC staff proposes to determine that the requested amendment involves no significant hazards consideration.

Attorney for licensee: Ms. Pamela B. Stroebel, Senior Vice President and General Counsel, Commonwealth Edison Company, P.O. Box 767, Chicago, Illinois 60690–0767.

NRC Section Chief: Anthony J. Mendiola.

Commonwealth Edison Company, Docket Nos. 50–237 and 50–249, Dresden Nuclear Power Station, Units 2 and 3, Grundy County, Illinois

Date of amendment request: February 21, 2000.

Description of amendment request: The proposed amendments would change the condensate storage tank (CST) low level setpoint to prevent entrainment of air in the high pressure coolant injection (HPCI) pump suction line when taking suction from the CST. The amendments would also revise the surveillance requirements for the CST level instruments.

Basis for proposed no significant hazards consideration determination: As required by 10 CFR 50.91(a), the licensee has provided its analysis of the issue of no significant hazards consideration, which is presented below:

Does the change involve a significant increase in the probability or consequences of an accident previously evaluated?

The Condensate Storage Tank (CST) water level and the installation of new pressure type switches are not precursors to accidents or transients described in the Updated Final Safety Analysis Report (UFSAR). The proposed changes will maintain the operability of the High Pressure Coolant Injection (HPCI) system, thus the HPCI system will continue to function as designed. Any failure of the new switches will still cause realignment of the HPCI suction from

the CST to the Torus as currently designed. Therefore, the proposed changes in water level and the installation of a new type switch will not result in a significant increase in the probability or consequences of an accident previously evaluated.

Does the change create the possibility of a new or different kind of accident from any accident previously evaluated?

For a system to create the possibility of a new and different accident, the proposed changes would have to require the system to operate in a mode or configuration that is different from the original design. The installation of the new switches does not alter the current logic configuration. The new switches will continue to function and initiate a transfer from the CSTs to the Torus as the suction source as originally designed. The proposed changes to the Technical Specifications (TS) will ensure that the HPCI suction transfer will occur before any air is entrained into the pump suction line. This is accomplished by ensuring that the water level in the CSTs does not reach the vortex limit before the transfer of the HPCI pump suction from the CSTs to the Torus is complete. No new functional failure modes will be introduced upon implementation of the proposed changes. Therefore, the possibility of a new or different kind of accident has not been created.

Does the change involve a significant reduction in a margin of safety?

The proposed changes to the CST Level-Low trip setpoint and installation of the new pressure switches provide assurance that air entrainment and vortexing will be prevented during HPCI operation. By maintaining an increased volume in the CSTs, the probability of a HPCI system malfunction due to air entrainment or vortexing is decreased. The installation of the new pressure type switches does not change the current logic configuration. The new switches will be calibrated at a frequency to ensure that the probability of unacceptable instrument drift is maintained at an acceptable level. Therefore, the proposed change does not involve a significant reduction in the margin of safety.

The NRC staff has reviewed the licensee's analysis and, based on this review, it appears that the three standards of 10 CFR 50.92(c) are satisfied. Therefore, the NRC staff proposes to determine that the requested amendments involve no significant hazards consideration.

Attorney for licensee: Ms. Pamela B. Stroebel, Senior Vice President and General Counsel, Commonwealth Edison Company, P.O. Box 767, Chicago, Illinois 60690–0767.

NRC Section Chief: Anthony J. Mendiola.

Commonwealth Edison Company, Docket Nos. 50–373 and 50–374, LaSalle County Station, Units 1 and 2, LaSalle County, Illinois

Date of amendment request: February 28, 2000.

Description of amendment request: The proposed amendments would increase the Technical Specification safety limit for the Minimum Critical Power Ratio from 1.08 for two loop operation and 1.09 for single loop operation to 1.11 and 1.12 respectively. The revised safety limits will conservatively bound the current LaSalle Unit 2 operating cycle for an anticipated 5 percent power uprate.

Basis for proposed no significant hazards consideration determination: As required by 10 CFR 50.91(a), the licensee has provided its analysis of the issue of no significant hazards consideration, which is presented below:

1. Do the proposed changes involve a significant increase in the probability or consequences of an accident previously evaluated?

The proposed changes increase the two loop operation Minimum Critical Power Ratio (MCPR) Safety Limit from 1.08 to 1.11 and the single loop operation MCPR Safety Limit from 1.09 to 1.12. MCPR Safety Limits have been established consistent with NRC-approved methods to ensure that fuel performance is acceptable. These changes do not affect the operability of plant systems, nor do they compromise any fuel performance limits. Therefore, the probability of an accident will not be changed based on these proposed changes.

The MCPR Safety Limit is set such that no fuel damage is calculated to occur if the limit is not violated. A larger value for the MCPR Safety Limit is conservative and bounding for the current LaSalle County Station, Unit 2, Cycle 8 core at the current licensed power level, because compliance with an MCPR Safety Limit equal to or greater than the calculated value will ensure that less than 0.1% of the fuel rods experience boiling transition. The MCPR Safety Limit does not impact the source term or pathways assumed in accidents previously evaluated. Therefore, these proposed changes do not increase the consequences of an accident previously evaluated.

Additionally, operational MCPR limits will be applied that will ensure the MCPR Safety Limit is not violated during all modes of operation and anticipated operational occurrences in accordance with the Core Operating Limits Report (COLR), which will be implemented prior to operation at uprated power. The MCPR Safety Limit ensures that less than 0.1% of the fuel rods in the core are expected to experience boiling transition. Therefore, the probability or consequences of an accident will not increase.

2. Do the proposed changes create the possibility of a new or different kind of accident from any accident previously evaluated?

Creation of the possibility of a new or different kind of accident would require the creation of one or more new precursors of that accident. Changing the MCPR Safety Limit does not alter or add any new equipment or change modes of operation. The MCPR Safety Limit is established to ensure that 99.9% of the fuel rods avoid boiling transition.

The MCPR Safety Limit is changing for LaSalle County Station, Unit 2 to support Cycle 8 operation at uprated power conditions. Changing the MCPR Safety Limit does not introduce any physical changes to the plant, alter the processes used to operate the plant, or change allowable modes of operation. Therefore, no new or different kind of accident is created that is different from any accident previously evaluated.

3. Do the proposed changes involve a significant reduction in a margin of safety?

The MCPR Safety Limit provides a margin of safety by ensuring that less than 0.1% of the fuel rods are predicted to be in boiling transition. The proposed changes increase the two loop operation MCPR Safety Limit from 1.08 to 1.11 and the single loop operation MCPR Safety Limit from 1.09 to 1.12. A larger value for the MCPR Safety Limit is conservative and bounding for the current LaSalle County Station, Unit 2 Cycle 8 core at the current licensed power level, because compliance with a MCPR Safety Limit equal to or greater than what is calculated will ensure that less than 0.1% of the fuel rods experience boiling transition. Additionally, the proposed changes are being submitted prior to completion of the detailed calculations for Cycle 8 power uprate. However, based on preliminary calculations, these revised limits are anticipated to bound Unit 2 Cycle 8 operation at uprated conditions.

Therefore, the margin of safety will not be reduced.

The NRC staff has reviewed the licensee's analysis and, based on this review, it appears that the three standards of 10 CFR 50.92(c) are satisfied. Therefore, the NRC staff proposes to determine that the requested amendments involve no significant hazards consideration.

Attorney for licensee: Ms. Pamela B. Stroebel, Senior Vice President and General Counsel, Commonwealth Edison Company, P.O. Box 767, Chicago, Illinois 60690–0767.

NRC Section Chief: Anthony J. Mendiola.

Duke Energy Corporation, Docket Nos. 50–369 and 50–370, McGuire Nuclear Station, Units 1 and 2, Mecklenburg County, North Carolina

Date of amendment request: November 23, 1999.

Description of amendment request: The proposed amendments would revise Technical Specification 5.5.11—Ventilation Filter Testing Program, which provides the test requirements for charcoal filters, to assure compliance with the requirements of American Society for Testing and Materials (ASTM) D3803–1989.

Basis for proposed no significant hazards consideration determination: As required by 10 CFR 50.91(a), the

licensee has provided its analysis of the issue of no significant hazards consideration, which is presented below:

1. Does the change involve a significant increase in the probability or consequences of an accident previously evaluated?

No. The proposed changes will ensure that the Technical Specification 5.5.11, Section c, required testing of charcoal filters in McGuire ventilation systems designed to meet the guidance provided in Regulatory Guide 1.52, Revision 2, are performed as per ASTM D3803–1989. This will ensure that these filters are capable of performing their design function to maintain offsite and control room operator doses within the limits of 10 CFR 100, Subpart A and 10 CFR 50, Appendix A, GDC [General Design Criteria] 19, following a LOCA [Loss-of-Coolant Accident] or a postulated fuel handling accident. Consequently, the proposed changes only deal with the performance of these systems during an accident and have no impact on accident probabilities. In addition, since the proposed changes help ensure the capability of the subject ventilation systems to perform their design function, there will be no reduction in the ability of these systems to minimize the consequences of a previously evaluated accident.

2. Does the change create the possibility of a new or different kind of accident from any accident previously evaluated?

No. The proposed changes only help ensure the performance of the subject ventilation systems during an accident and have no impact on accident possibilities. No changes are being made to actual plant hardware or the way in which the plant is being operated. Therefore, no new accident causal mechanisms will be generated. Consequently, plant accident analyses will not be affected by these changes.

3. Does this change involve a significant reduction in a margin of safety?

No. Margin of safety is related to the confidence in the ability of the fission product barriers to perform their design functions during and following accident conditions. These barriers include the fuel cladding, the reactor coolant system, and the containment system. The performance of these barriers will not be degraded by the proposed changes. In addition, the proposed changes to the maximum methyl iodide requirements to accommodate planned changes in filter efficiencies will not result in any degradation in the capability of the affected charcoal filters to perform their design function. As a result of the above, plant safety analyses will not be affected by the changes proposed in this LAR [License Amendment Request].

The NRC staff has reviewed the licensee's analysis and, based on this review, it appears that the three standards of 10 CFR 50.92(c) are satisfied. Therefore, the NRC staff proposes to determine that the amendment request involves no significant hazards consideration.

Attorney for licensee: Ms. Lisa F. Vaughn, Duke Energy Corporation, 422 South Church Street, Charlotte, North Carolina 28201–1006.

NRC Section Chief: Richard L. Emch, Jr.

Duke Energy Corporation, Docket Nos. 50–369 and 50–370, McGuire Nuclear Station, Units 1 and 2, Mecklenburg County, North Carolina

Date of amendment request: January 6, 2000.

Description of amendment request: The proposed amendments would revise Technical Specifications (TS) 3.3.1—Reactor Trip System (RTS) Instrumentation, TS 3.3.2—Engineered Safety Feature Actuation System (ESFAS) Instrumentation, TS 3.3.5—Loss of Power Diesel Generator Start (LOP) Instrumentation, and TS 3.3.6—Containment Purge and Exhaust Isolation (VP) Instrumentation. The proposed revisions will facilitate treatment of the applicable RTS, ESFAS, LOP, and VP Instrumentation TS Trip Setpoints as nominal values. In addition, proposed changes to the applicable TS Bases further define the TS Trip Setpoints as nominal values.

Basis for proposed no significant hazards consideration determination: As required by 10 CFR 50.91(a), the licensee has provided its analysis of the issue of no significant hazards consideration, which is presented below:

1. Does the change involve a significant increase in the probability or consequences of an accident previously evaluated?

No. The proposed changes are consistent with the current licensing basis for the McGuire Nuclear Station, the setpoint methodologies used to develop the Trip Setpoints, the McGuire Safety Analyses, and current station calibration procedures and practices. The Reactor Trip System and Engineered Safety Features Actuation System are not accident initiating systems; they are accident mitigating systems. Therefore, these proposed changes will have no impact on any accident probabilities. Accident consequences will not be affected, as no changes are being made to the plant which will involve a reduction in reliability of these systems. Consequently, any previous evaluations associated with accidents will not be affected by these changes.

2. Does the change create the possibility of a new or different kind of accident from any accident previously evaluated?

No. The proposed changes are consistent with the current licensing basis for the McGuire Nuclear Station, the setpoint methodologies used to develop the Trip Setpoints, the McGuire Safety Analyses, and current station calibration procedures and practices. No changes are being made to actual plant hardware which will result in any new accident causal mechanisms. Also, no changes are being made to the way in which the plant is being operated. Therefore, no new accident causal mechanisms will be generated. Consequently, plant accident analyses will not be affected by these changes.

3. Does this change involve a significant reduction in a margin of safety?

No. The proposed changes are consistent with the current licensing basis for the McGuire Nuclear Station, the setpoint methodologies used to develop the Trip Setpoints, the McGuire Safety Analyses, and current station calibration procedures and practices. Margin of safety is related to the confidence in the ability of the fission product barriers to perform their design functions during and following accident conditions. These barriers include the fuel cladding, the reactor coolant system, and the containment system. The performance of these barriers will not be degraded by the proposed changes. Consequently, plant safety analyses will not be affected by these changes.

The NRC staff has reviewed the licensee's analysis and, based on this review, it appears that the three standards of 10 CFR 50.92(c) are satisfied. Therefore, the NRC staff proposes to determine that the amendment request involves no significant hazards consideration.

Attorney for licensee: Ms. Lisa F. Vaughn, Duke Energy Corporation, 422 South Church Street, Charlotte, North Carolina 28201–1006.

NRC Section Chief: Richard L. Emch, Jr.

Entergy Operations, Inc., Docket No. 50–313, Arkansas Nuclear One, Unit No. 1, Pope County, Arkansas

Date of amendment request: November 23, 1999, as supplemented by letter dated February 24, 2000

Description of amendment request: The proposed amendment would incorporate the use of American Society for Testing and Materials (ASTM) D3803–1989, ''Standard Test Method for Nuclear-Grade Activated Carbon,'' into the Technical Specifications (TSs). Entergy Operations, Inc. (the licensee) is submitting this proposed amendment as a complete response to Nuclear Regulatory Commission (NRC) Generic Letter (GL) 99–02, ''Laboratory Testing of Nuclear-Grade Activated Charcoal.'' The February 24, 2000, supplement proposes additional changes to the TSs to ensure that ventilation system velocity requirements are established in accordance with the standards of ASTM D3803–1989. This application was previously noticed in the **Federal Register** on March 8, 2000 (65 FR 12291).

Basis for proposed no significant hazards consideration determination: As required by 10 CFR 50.91(a), the licensee has provided its analysis of the issue of no significant hazards

consideration, which is presented below:

Criterion 1—Does Not Involve a Significant Increase in the Probability or Consequences of an Accident Previously Evaluated

Deleting portions of applicable ANO–1 [Arkansas Nuclear One, Unit 1] TSs that reference system design velocity criteria for activated charcoal medium testing requires no physical change to plant design. NRC GL 99–02, in support of the ASTM D3803–1989 standard, requires licensees to utilize charcoal testing methods that will ensure the current license basis, as it relates to General Design Criterion (GDC) 19, is maintained. The existing criterion within the affected ANO–1 TSs is less restrictive than that of ASTM D3803–1989 standard and, therefore, is being proposed for deletion. The testing of charcoal mediums has no impact on the probability of an accident occuring. However, the charcoal mediums do act to reduce radioiodines released to the environment during and following an accident. Testing the charcoal mediums to a more restrictive standard, however, does not increase the consequences of an accident since such testing ensures the current analyses remain valid.

Therefore, the proposed changes do not involve a signficant increase in the probability or consequences of any accident previously evaluated.

Criterion 2—Does Not Create the Possibility of a New or Different Kind of Accident from any Previously Evaluated

As stated previously, the proposed changes to the ANO–1 TSs do not result in any physical change to plant design, nor does the testing of charcoal mediums act to create a new or different accident than that previously analyzed. The existing criterion within the affected ANO–1 TSs is less restrictive than that of ASTM D3803–1989 standard and, therefore, is being proposed for deletion. Testing criteria governing the operability of charcoal mediums is not considered an accident initiator of new, different, or previously analyzed accidents. The charcoal mediums act solely to reduce radioiodines released to the environment during and following accident scenarios.

Therefore, the proposed changes do not create the possiblity of a new or different kind of accident from any previously evaluated.

Criterion 3—Does Not Involve a Significant Reduction in the Margin of Safety

Testing of charcoal mediums to more restrictive criteria acts to better ensure that these mediums will perform their design function during and following accidents that result in a release of radioiodines. No reduction in the margin to safety can be construed based on the new testing criteria. The charcoal mediums will continue to remove radioiodines as originally designed and approved by the NRC during and following accidents involving radioactive release.

Therefore, the proposed changes do not involve a significant reduction in the margin of safety.

The NRC staff has reviewed the licensee's analysis and, based on this review, it appears that the three standards of 10 CFR 50.92(c) are satisfied. Therefore, the NRC staff proposes to determine that the amendment request involves no significant hazards consideration.

Attorney for licensee: Nicholas S. Reynolds, Esquire, Winston and Strawn, 1400 L Street, NW., Washington, DC 20005–3502.

NRC Section Chief: Robert A. Gramm.

Entergy Operations, Inc., Docket No. 50–368, Arkansas Nuclear One, Unit No. 2, Pope County, Arkansas

Date of amendment request: January 27, 2000.

Description of amendment request: The proposed amendment would revise the Arkansas Nuclear One, Unit 2 (ANO–2) technical specifications (TS) by providing actions associated with inoperable control room emergency ventilation or cooling systems during movement of irradiated fuel during shutdown modes of operation, when allowed outage times associated with these systems are not met.

Basis for proposed no significant hazards consideration determination: As required by 10 CFR 50.91(a), the licensee has provided its analysis of the issue of no significant hazards consideration, which is presented below:

Criterion 1—Does Not Involve a Significant Increase in the Probability or Consequences of an Accident Previously Evaluated

The inclusion of additional actions within the ANO–2 TSs associated with the control room emergency ventilation and air conditioning systems during the handling of irradiated fuel does not require any physical modification to plant components or systems. Implementing the proposed actions act to ensure the operability of the remaining system, eliminate the reliance on automatic actuation where applicable, and ensure that any active failure will be readily detected. The proposed changes, therefore, act to ensure [that] the consequences of a fuel handling accident are mitigated and have no impact on the probability [of] a fuel handling accident occurring. The proposed actions are in addition to those currently required by the ANO–2 TSs and, therefore, are more restrictive.

Therefore, the proposed changes do not involve a significant increase in the probability or consequences of any accident previously evaluated.

Criterion 2—Does Not Create the Possibility of a New or Different Kind of Accident from any Previously Evaluated

The inclusion of additional actions within the ANO–2 TSs associated with the control room emergency ventilation and air conditioning systems during the handling of irradiated fuel does not require any physical modification to plant components or systems. Implementing the proposed actions act to ensure the operability of the remaining system, eliminate the reliance on automatic actuation where applicable, and ensure that any active failure will be readily detected. The proposed changes, therefore, are not relevant to creating new or different kinds of accidents than those previously evaluated. The proposed actions are in addition to those currently required by the ANO–2 TSs.

Therefore, this change does not create the possibility or a new or different kind of accident from any previously evaluated.

Criterion 3—Does Not Involve a Significant Reduction in the Margin of Safety

The inclusion of additional actions within the ANO–2 TSs associated with the control room emergency ventilation and air conditioning systems during the handling of irradiated fuel act to ensure the operability of the remaining system, eliminate the reliance on automatic actuation where applicable, and ensure that any active failure will be readily detected. The proposed changes, therefore, act to maintain the margin of safety by ensuring the operability of redundant equipment that is required to protect control room personnel in the event of a fuel handling accident. The proposed actions are in addition to those currently required by the ANO–2 TSs and, therefore, are more restrictive.

Therefore, this change does not involve a significant reduction in the margin of safety.

The NRC staff has reviewed the licensee's analysis and, based on this review, it appears that the three standards of 10 CFR 50.92(c) are satisfied. Therefore, the NRC staff proposes to determine that the amendment request involves no significant hazards consideration.

Local Public Document Room location: Tomlinson Library, Arkansas Tech University, Russellville, Arkansas 72801.

Attorney for licensee: Nicholas S. Reynolds, Esquire, Winston and Strawn, 1400 L Street, NW., Washington, DC 20005–3502.

NRC Section Chief: Robert A. Gramm.

Entergy Operations, Inc., Docket No. 50–368, Arkansas Nuclear One, Unit No. 2, Pope County, Arkansas

Date of amendment request: February 24, 2000.

Description of amendment request: The proposed amendment would revise Technical Specification (TS) 4.4.11 on reactor coolant system vent flow verification, TS 4.6.1.1.a on containment penetration closure verification (non-automatic), and TS 4.6.3.1.2 on containment isolation valve actuation verification. These TS surveillances require testing to be performed during Modes 5 and/or 6. The proposed change will eliminate unnecessary mode restrictions on these surveillance requirements.

Basis for proposed no significant hazards consideration determination: As required by 10 CFR 50.91(a), the licensee has provided its analysis of the issue of no significant hazards consideration, which is presented below:

Criterion 1—Does Not Involve a Significant Increase in the Probability or Consequences of an Accident Previously Evaluated

Current regulation requires the licensee to responsibly plan, schedule, and perform testing of station equipment. Furthermore, the philosophies of the RSTS [Revised Standard Technical Specifications] do not restrict surveillance performance to specific modes of operation or other plant conditions. Deletion of the mode restrictions will not relinquish licensee responsibility from prudent planning, scheduling, and performance of testing activities and may provide the licensee lower-risk periods of opportunity for test performance. Because of this, the proposed changes are considered to be administrative in nature and do not significantly affect the plant or personnel safety. Modes in which surveillances are performed are not analyzed in association with accident probability or the consequences of an accident. The proposed changes reduce unnecessary restrictions on the licensee and provide consistency with the philosophies of the RSTS.

Therefore, the proposed changes do not involve a significant increase in the probability or consequences of any accident previously evaluated.

Criterion 2—Does Not Create the Possibility of a New or Different Kind of Accident from any Previously Evaluated

The licensee will continue to be accountable for proper and prudent planning, scheduling, and performance of surveillance activities in the absence of the aforementioned mode restrictions proposed for deletion. Therefore, the proposed changes are considered to be administrative in nature and do not significantly affect the plant or personnel safety. The probability of a new or different kind of accident being created remains unchanged since the licensee currently is required to properly plan and execute surveillance tests, even within specific modes of operation. Other activities presently ongoing during the currently specified operational modes could result in an unexpected or unforseen transient or condition if surveillance testing is not properly planned and executed given the other activities in progress and current plant conditions. Since the responsibility of the licensee in these matters remains unchanged by the proposed changes, the possibility of a new or different kind of accident being created also remains unchanged.

Therefore, the proposed changes do not create the possibility of a new or different kind of accident from any previously evaluated.

Criterion 3—Does Not Involve a Significant Reduction in the Margin of Safety

The licensee will continue to be accountable for proper and prudent planning, scheduling, and performance of surveillance activities in the absence of the aforementioned mode restrictions proposed for deletion. Therefore, the proposed changes are considered to be administrative in nature and do not significantly affect the plant or personnel safety. The margin to safety remains unchanged since the licensee currently is required to properly plan and execute surveillance tests, even within specific modes of operation. Other activities presently ongoing during the currently specified operational modes could result in an unexpected or unforseen transient or condition if surveillance testing is not properly planned and executed given the other activities in progress and current plant conditions. Since the responsibility of the licensee in these matters remains unchanged by the proposed changes, no significant reduction in the margin to safety is evident.

Therefore, the proposed changes do not involve a significant reduction in the margin of safety.

The NRC staff has reviewed the licensee's analysis and, based on this review, it appears that the three standards of 10 CFR 50.92(c) are satisfied. Therefore, the NRC staff proposes to determine that the amendment request involves no significant hazards consideration.

Attorney for licensee: Nicholas S. Reynolds, Esquire, Winston and Strawn, 1400 L Street, NW., Washington, DC 20005–3502.

NRC Section Chief: Robert A. Gramm.

Entergy Operations, Inc., System Energy Resources, Inc., South Mississippi Electric Power Association, and Entergy Mississippi, Inc., Docket No. 50–416, Grand Gulf Nuclear Station, Unit 1, Claiborne County, Mississippi

Date of amendment request: January 21, 2000.

Description of amendment request: Entergy Operations, Inc. requests revision of the Grand Gulf Nuclear Station licensing basis and Technical Specifications to utilize the alternative accident source term described in NUREG–1465.

Basis for proposed no significant hazards consideration determination: As required by 10 CFR 50.91(a), the licensee has provided its analysis of the issue of no significant hazards consideration, which is presented below:

This proposed amendment to the Grand Gulf Nuclear Station (GGNS) Technical Specifications (TS) revises those specifications affected by the implementation of the alternative source term concepts in accordance with NUREG–1465. In addition, based on the alternative source term, changes are proposed to selected specifications associated with handling irradiated fuel in the primary or secondary containment and CORE ALTERATIONS. Specifically, the proposal uses a new term to describe irradiated fuel that contains sufficient fission products to require operability of accident mitigation systems to meet the accident analysis assumptions. The alternative source term changes affect the definitions and the specifications for the Control Room Fresh Air System, MSIV [main steam isolation valve] leakage surveillance, Standby Gas Treatment System surveillance, and revises a license condition to increase the allowable control room inleakage. The specifications affected by the relaxation of the shutdown controls include those for the Control Room HVAC [heating, ventilation, and air conditioning] system, and the electrical AC [alternating current] Sources, DC [direct current] Sources and Distribution Systems during shutdown.

The Commission has provided standards for determining whether a no significant hazards consideration exists as stated in 10CFR50.92(c). A proposed amendment to an operating license involves a no significant hazards consideration if operation of the facility in accordance with the proposed amendment would not: (1) involve a significant increase in the probability or consequences of an accident previously evaluated; or (2) create the possibility of a new or different kind of accident from any accident previously evaluated; or (3) involve a significant reduction in a margin of safety.

Entergy Operations, Inc. has evaluated the no significant hazards considerations in its request for a license amendment. In accordance with 10CFR50.91(a), Entergy Operations, Inc. is providing the analysis of the proposed amendment against the three standards in 10CFR50.92(c). A description of the no significant hazards considerations determination follows:

1. The proposed changes do not significantly increase the probability or consequences of an accident previously evaluated.

The alternative source term does not affect the design or operation of the facility; rather, once the occurrence of an accident has been postulated the new source term is an input to evaluate the consequences. The implementation of the alternative source term has been evaluated in revisions to the analyses of the limiting design basis accidents at Grand Gulf Nuclear Station. Based on the results of these analyses, it has been demonstrated that, even with the requested Technical Specification and Operating License changes, the dose consequences of these limiting events are within the regulatory guidance currently proposed by the NRC [Nuclear Regulatory Commission] for use with the alternative source term. This guidance is presented in NUREG–1465, in the draft rulemaking for 10CFR50.67, and in the associated draft Regulatory Guide DG–1081.

A new term to describe irradiated fuel is used to establish operational conditions where specific activities represent situations where significant radioactive releases can be postulated. These operational conditions are consistent with the design basis analysis. Because the equipment affected by the revised operational conditions is not considered an initiator to any previously analyzed accident, inoperability of the equipment cannot increase the probability of

any previously evaluated accident. The proposed requirements bound the conditions of the current design basis fuel handling accident analysis which concludes that the radiological consequences are within the acceptance criteria of NUREG–0800, Section 15.7.4 and General Design Criteria [GDC] 19. As noted above, with the alternative source term implementation, the acceptance criteria are also being revised. The results of the revised Fuel Handling Accident demonstrate that the dose consequences are within the currently proposed NRC regulatory guidance. This guidance is presented in NUREG–1465, in the draft rulemaking for 10CFR50.67, and in the associated draft Regulatory Guide DG–1081.

Therefore, the proposed changes do not significantly increase the probability or consequences of any previously evaluated accident.

2. The proposed changes would not create the possibility of a new or different kind of accident from any previous[ly] analyzed.

The alternative source term does not affect the design, functional performance, or operation of the facility or of any equipment within the facility. Similarly, it does not affect the design or operation of any equipment or systems involved in the mitigation of any accidents. The proposed changes to the Technical Specifications and the Operating License, while they revise certain performance requirements, do not involve any physical modifications to the plant. Therefore, the proposed changes associated with the alternative source term do not create the possibility of a new or different kind of accident from any previous[ly] analyzed.

The new term to describe irradiated fuel is used to establish operational conditions where specific activities represent situations where significant radioactive releases can be postulated. These operational conditions are consistent with the design basis analyses. The relaxation of selected shut down controls has been modeled in revised analyses. The proposed changes do not introduce any new modes of plant operation and do not involve physical modifications to the plant. Therefore, the proposed changes related to shutdown controls based on the alternative source term do not create the possibility of a new or different kind of accident from any previous[ly] analyzed.

Therefore, the proposed changes do not create the possibility of a new or different kind of accident from any accident previously analyzed.

3. The proposed changes do not involve a significant reduction in a margin of safety.

The changes above are basically associated with the implementation of a new licensing basis for Grand Gulf Nuclear Station. Approval of the basis change from the original source term in accordance with TID–14844 to the new alternative source term of NUREG–1465 is requested by this submittal. The results of the accident analyses revised in support of this submittal, and considering the requested Technical Specification and Operating License changes, are subject to revised acceptance criteria. These analyses have been performed using conservative methodologies as outlined in the currently proposed regulatory guidance. Safety margins and analytical conservatisms have been evaluated and are well understood. The analyzed events have been carefully selected and margin has been retained to ensure that the analyses adequately bound all postulated event scenarios. The dose consequences of these limiting events are within the acceptance criteria also found in the latest regulatory guidance. This guidance is presented in NUREG–1465, in the approved rulemaking for 10CFR50.67, and in the associated draft Regulatory Guide DG–1081.

The proposed changes continue to ensure that the doses at the exclusion area and low population zone boundaries as well as control room, are within the corresponding regulatory limit. In a similar way, the results of the existing analyses demonstrated that the dose consequences were within the applicable NRC-specified regulatory limit. Specifically, the margin of safety for these accidents is considered to be that provided by meeting the applicable regulatory limit, which, for most events, is conservatively set below the 10CFR100 limit. With respect to the control room personnel doses, the margin of safety is the difference between the 10CFR100 limits and the regulatory limit defined by 10CFR50, Appendix A, Criterion 19 (GDC 19).

Therefore, because the proposed changes continue to result in dose consequences within the applicable regulatory limits, they are considered to not result in a significant reduction in a margin of safety.

Based on the above evaluation, operation in accordance with the proposed amendment involves no significant hazards considerations.

The NRC staff has reviewed the licensee's analysis and, based on this review, it appears that the three standards of 10 CFR 50.92(c) are satisfied. Therefore, the NRC staff proposes to determine that the amendment request involves no significant hazards consideration.

Attorney for licensee: Nicholas S. Reynolds, Esquire, Winston and Strawn, 1400 L Street, NW., 12th Floor, Washington, DC 20005–3502.

NRC Section Chief: Robert A. Gramm.

Entergy Operations, Inc., System Energy Resources, Inc., South Mississippi Electric Power Association, and Entergy Mississippi, Inc., Docket No. 50–416, Grand Gulf Nuclear Station, Unit 1, Claiborne County, Mississippi

Date of amendment request: January 24, 2000.

Description of amendment request: Entergy Operations, Inc. requests revisions to the Grand Gulf Nuclear Station Technical Specifications which specify the minimum useable fuel oil inventories to be maintained in the Division 1, 2, and 3 Diesel Generator Fuel Oil Storage Tanks.

Basis for proposed no significant hazards consideration determination: As required by 10 CFR 50.91(a), the licensee has provided its analysis of the issue of no significant hazards consideration, which is presented below:

Entergy has evaluated this proposed Technical Specification change and has determined that it involves no significant hazards consideration. This determination has been performed in accordance with the criteria set forth in 10CFR50.92. The following evaluation is provided for the three categories of the significant hazards consideration standards:

1. Does the change involve a significant increase in the probability or consequences of an accident previously evaluated?

This change would require additional fuel oil to be stored in each of the Division 1, 2, and 3 Diesel Generator Fuel Oil Storage Tanks. The amount of diesel fuel required to be kept in the storage tanks, which has been determined by Calculation MC–Q1P75–90190 Revision 2 and Calculation MC–Q1P81–90188 Revision 2, is well within the maximum capacity of the Diesel Generator Fuel Oil Storage Tanks. As stated in UFSAR [Updated Final Safety Analysis Report] Section 9.5.4.3 (Safety Evaluation for the diesel fuel storage subsystem) '* * * the tank level will be above the ''seven-day capacity'' required level and will be kept as near the top as practical.'' Other fuel oil storage subsystem components, such as the transfer pumps, are similarly designed, as a minimum, for the storage tanks being filled to maximum capacity. The Diesel Generator Fuel Oil Storage Tanks continue to meet the original design requirements as described in the UFSAR. The proposed change will provide adequate fuel for diesel generator operation at the Technical Specification surveillance testing capacity for Division 1 and 2 Diesel Generators, 5740 KW, and the nameplate rating for Division 3 Diesel Generator, 3300 KW, rather than the lower post-LOCA [loss-of-coolant accident] load profiles previously assumed. Therefore, increasing the quantity of fuel oil required to be maintained, will not increase the probability of the diesel generators becoming an initiator for any previously evaluated accident. Furthermore, since the proposed change increases the fuel oil inventory it should enhance the ability of the diesel generators to respond to an accident and as such the change does not increase the consequences of any previously analyzed accident.

2. Does the change create the possibility of a new or different kind of accident from any accident previously evaluated?

The Diesel Generator Fuel Oil subsystem design and operation will not change except for the incorporation of increased fuel oil inventory requirements. This proposed increase remains within the maximum capacity of the Diesel Generator Fuel Oil Storage Tanks. Existing analyses and evaluations, concerning the fuel oil storage tanks, are not adversely impacted by this increase in the required fuel oil inventory. Other fuel oil storage subsystem components, such as the transfer pumps, are similarly designed, as a minimum, for the storage tanks being filled to maximum capacity. The subsystem continues to meet the original design requirements. The proposed increased fuel oil inventory cannot adversely affect any other equipment. Therefore, since the proposed change only increases the fuel oil

inventory requirements and does not result in any change in the response of any equipment to an accident, the proposed change does not create the possibility of a new or different kind of accident from any previously analyzed accident.

3. Does this change involve a significant reduction in a margin of safety?

Existing Technical Specification 3.8.3 bases state the Diesel Generator Fuel Oil Storage Tank minimum level is sufficient to operate the respective Diesel Generator for seven days while supplying maximum post-LOCA demands. The proposed change increases the quantity of fuel oil required to be maintained in each of the Division 1, 2, and 3 Diesel Generator Fuel Oil Storage Tanks. The proposed change will provide adequate fuel for diesel generator operation at the Technical Specification surveillance testing capacity for Division 1 and 2 Diesel Generators, 5740 KW, and the nameplate rating for Division 3 Diesel Generator, 3300 KW, rather than the lower post-LOCA load profiles previously assumed. The amount of diesel fuel required to be kept in the storage tanks, which has been determined by Calculation MC–Q1P75–90190 Revision 2 and Calculation MC–Q1P81–90188 Revision 2, is well within the maximum capacity of the Diesel Generator Fuel Oil Storage Tanks. Therefore, since the proposed change increases the fuel oil inventory it should enhance the ability of the diesel generators to respond to an accident and as such the change does not decrease any margin of safety previously assumed.

The NRC staff has reviewed the licensee's analysis and, based on this review, it appears that the three standards of 10 CFR 50.92(c) are satisfied. Therefore, the NRC staff proposes to determine that the amendment request involves no significant hazards consideration.

Attorney for licensee: Nicholas S. Reynolds, Esquire, Winston and Strawn, 1400 L Street, NW., 12th Floor, Washington, DC 20005–3502.

NRC Section Chief: Robert A. Gramm.

Northeast Nuclear Energy Company, et al., Docket No. 50–336, Millstone Nuclear Power Station, Unit No. 2, New London County, Connecticut

Date of amendment request: January 27, 2000.

Description of amendment request: The proposed amendment would allow operation of the facility for a period of up to 12 hours with the temperature of the ultimate heat sink (UHS) between 75 and 77°F, provided water temperature is verified below 77°F at least once per hour. Currently the temperature limit is 75°F and is verified at least once per 6 hours when the temperature is above 70°F, or once per 24 hours below 70°F.

Basis for proposed no significant hazards consideration determination: As required by 10 CFR 50.91(a), the licensee has provided its analysis of the issue of no significant hazards consideration, which is presented below:

In accordance with 10 CFR 50.92 NNECO [Northeast Nuclear Energy Company] has reviewed the proposed change and has concluded that it does not involve a significant hazards consideration (SHC). The basis for this conclusion is that the three criteria of 10 CFR 50.92(c) are not compromised. The proposed change does not involve a SHC because the change would not:

1. Involve a significant increase in the probability or consequences of an accident previously evaluated.

The proposed change will allow plant operation to continue for an additional 12 hours with the temperature of the UHS up to 2°F above the Technical Specification limit of 75°F. This increase in UHS temperature will not affect the normal operation of the plant to the extent which would make any accident more likely to occur. In addition, there exists adequate margin in the safety systems and heat exchangers to assure the safety functions are met at the higher temperature. An evaluation has confirmed that safe shutdown will be achieved and maintained for a loss of coolant accident (LOCA) with a loss of normal power (LNP) and a single active failure with an UHS water temperature as high as 77°F.

The proposed change will have no adverse effect on plant operation, or the availability or operation of any accident mitigation equipment. The plant response to the design basis accidents will not change. In addition, the proposed change can not cause an accident. Therefore, there will be no significant increase in the probability or consequences of an accident previously evaluated.

2. Create the possibility of a new or different kind of accident from any accident previously evaluated.

The proposed change will allow plant operation to continue for an additional 12 hours with the temperature of the UHS up to 2°F above the Technical Specification limit of 75°F. This will not alter the plant configuration (no new or different type of equipment will be installed) or require any new or unusual operator actions. The proposed change will not alter the way any structure, system or component functions and will not significantly alter the manner in which the plant is operated. There will be no adverse effect on plant operation or accident mitigation equipment. The proposed change does not introduce any new failure modes. Also, the response of the plant and the operators following these accidents is unaffected by the change. In addition, the UHS is not an accident initiator. Therefore, the proposed change will not create the possibility of a new or different kind of accident from any previously analyzed.

3. Involve a significant reduction in a margin of safety.

The proposed change will allow plant operation to continue for an additional 12 hours with the temperature of the UHS up to 2°F above the Technical Specification limit of 75°F. An evaluation has been performed which demonstrates that the safety systems have adequate margin to ensure their safety functions can be met with an ultimate heat sink water temperature of 77°F. In addition, safe shutdown capability has been demonstrated for an UHS water temperature as high as 77°F.

The proposed change will have no adverse effect on plant operation or equipment important to safety. The plant response to the design basis accidents will not change and the accident mitigation equipment will continue to function as assumed in the design basis accident analysis. Therefore, there will be no significant reduction in a margin of safety.

The proposed change does not alter the design, function, or operation of the equipment involved. The impact of the proposed change has been analyzed, and it has been determined it does not involve a significant increase in the probability or consequences of an accident previously evaluated, does not create the possibility of a new or different kind of accident from any accident previously evaluated, and does not involve a significant reduction in a margin of safety. Therefore, NNECO has concluded the proposed change does not involve a SHC.

The NRC staff has reviewed the licensee's analysis and, based on this review, it appears that the three standards of 10 CFR 50.92(c) are satisfied. Therefore, the NRC staff proposes to determine that the amendment request involves no significant hazards consideration.

Attorney for licensee: Lillian M. Cuoco, Esq., Senior Nuclear Counsel, Northeast Utilities Service Company, P.O. Box 270, Hartford, Connecticut.

NRC Section Chief: James W. Clifford.

PECO Energy Company, Docket Nos. 50–352 and 50–353, Limerick Generating Station, Units 1 and 2, Montgomery County, Pennsylvania

Date of amendment request: May 26, 1999.

Description of amendment request: The proposed amendments would relocate Technical Specification (TS) Surveillance Requirement 4.1.3.5.b, regarding the performance of channel functional test and channel calibration of certain control rod scram accumulator instrumentation, to the Updated Final Safety Analysis Report and would revise TS 3.1.3.5 to allow an alternate method for verifying whether a control rod drive pump is operating.

Basis for proposed no significant hazards consideration determination: As required by 10 CFR 50.91(a), the licensee has provided its analysis of the issue of no significant hazards consideration, which is presented below:

1. The proposed Technical Specifications (TS) changes do not involve a significant increase in the probability or consequences of an accident previously evaluated.

The first proposed change relocates control rod drive (CRD) instrumentation requirements from the TS to the UFSAR and plant procedures. The second proposed change adds an alternate method for verifying operation of a control rod drive pump in the TS action statement.

Regarding the first proposed change, operability of the accumulators is determined by verifying that the pressure in each accumulator is greater than or equal to 955 psig. TS 4.1.3.5.a requires weekly verification of accumulator pressure. The local pressure indicator for each accumulator is the normal means of satisfying this surveillance. This proposed change does not affect or alter the requirements associated with this instrumentation. If the local pressure indicator is not functioning or pressure is less than 955 psig, the accumulator will still be declared inoperable.

Operability of the accumulator pressure or water level alarm and indication function provided by the Reactor Manual Control System (RMCS) is not critical to the ability to insert control rods because:

(1) The rods can be inserted with normal charging water pressure if the accumulator is inoperable;

(2) A controlled shutdown or scram would occur before the accumulator would lose its full capability to insert the control rod, if it is found that no control rod drive pumps are operating according to existing procedural and TS controls placed on the plant; and

(3) The subject instruments' alarm and indication function are part of routine operational monitoring and are not considered in the plant safety analysis.

[Therefore, the removal of the accumulator pressure or level indication does not impact the consequences or probability of an accident previously evaluated. The operational monitoring of the accumulator alarms and indication system affords operating personnel the status of system condition and the opportunity to initiate appropriate actions if deemed necessary.]

The second proposed change simply adds an alternate method for verifying operation of a control rod drive pump. This check provides an equivalent method of verifying that inoperable control rod accumulators were not caused by a control rod drive pump trip. In addition:

(1) The assumed control rod reactivity insertion rate is not changed;

(2) The maximum number of inoperable accumulators and control rods is not changed;

(3) The TS actions to be taken in the event that a control rod drive pump is not operating remain unchanged; and

(4) The instrumentation for accumulator leakage a pressure detection will continue to be maintained and calibrated.

A RMCS failure does not change the failure modes or the reliability of the control rod function as described and evaluated in the UFSAR. The CRD system will continue to be available to safely shutdown the plant as described and evaluated in the UFSAR.

Therefore, these proposed changes do not involve a significant increase in the probability or consequences of an accident previously evaluated.

2. The proposed TS changes do not create the possibility of a new or different kind of accident from any accident previously evaluated.

Neither the mechanism for initiating nor for carrying out a scram is modified by either of these proposed changes. These proposed changes do not:

(1) Create a means by which the scram function could be impeded or prevented.

(2) Involve a physical plant alteration or change the methods governing normal plant operation.

(3) Impose or eliminate any requirements or change the controls for maintaining the requirements.

There are no other malfunctions that need to be considered since failure of a significant number of control rods to scram is analyzed in Section 15.8 of the UFSAR. This is the bounding analysis for multiple control rod malfunctions or severe degradation of control rod scram performance. This event is mitigated by safety systems not directly related to the CRD system including the scram accumulators.

Therefore, these proposed changes do not create the possibility of a new or different kind of accident from any accident previously evaluated.

3. The proposed TS changes do not involve a significant reduction in a margin of safety.

The first proposed change relocates CRD instrumentation requirements from TS to the UFSAR and plant procedures. The proposed change will not reduce a margin of safety, because it has no impact on any safety analysis. * * * [Therefore, the proposed change does not involve a significant reduction in a margin of safety.]

The second proposed change adds an alternate method for verifying operation of a control rod drive pump in the TS action statement. This proposed change does not reduce a margin of safety because the proposed change does not:

(1) Affect the maximum allowable control rod scram times,

(2) Change the maximum allowable number or minimum separation of inoperable control rods, or

(3) Modify any of the instrument setpoints or functions.

The proposed change will either maintain the present margin of safety or increase it, by reducing the need for unnecessary challenges to the Reactor Protection System (RPS) and resulting plant shutdown, while still maintaining the capability to complete a reactor scram.

Therefore, these proposed TS changes do not involve a significant reduction in a margin of safety.

The NRC staff has reviewed the licensee's analysis and, based on this review, it appears that the three standards of 10 CFR 50.92(c) are satisfied. Therefore, the NRC staff proposes to determine that the amendment request involves no significant hazards consideration.

Local Public Document Room location: Pottstown Public Library, 500 High Street, Pottstown, PA 19464.

Attorney for licensee: J. W. Durham, Sr., Esquire, Sr. V.P. and General Counsel, PECO Energy Company, 2301 Market Street, Philadelphia, PA 19101.

NRC Section Chief: James W. Clifford.

Power Authority of the State of New York, Docket No. 50–333, James A. FitzPatrick Nuclear Power Plant, Oswego County, New York

Date of amendment request: February 3, 2000.

Description of amendment request: The proposed amendment would change the Technical Specifications (TSs) by revising the reactor water level setpoint for the Anticipated Transient Without Scram Recirculation Pump Trip (ATWS–RPT) function and the Alternate Rod Injection (ARI) functions (Table 3.2–7).

Basis for proposed no significant hazards consideration determination: As required by 10 CFR 50.91(a), the licensee has provided its analysis of the issue of no significant hazards consideration, which is presented below:

Operation of the FitzPatrick plant in accordance with the proposed amendment would not involve a significant hazards consideration as defined in 10 CFR 50.92, since it would not:

1. Involve a significant increase in the probability or consequences of an accident previously evaluated.

The proposed TS change deals only with an instrumentation setpoint which initiates the ATWS–RPT/ARI function. The system is intended to provide a mitigation function during a postulated ATWS event and does not provide any other plant control function. However, if the ATWS–RPT/ARI system were to fail, the result would be a trip of the recirculation pumps, or reactor scram, both of which are currently evaluated. The design of the system includes a one-out-of-two-twice logic, which ensures that a single failure in the system cannot cause or inhibit the ATWS–RPT/ARI function. Therefore, the probability of an inadvertent recirculation pump trip or inadvertent reactor scram is not changed from the event as currently described in the JAFNPP UFSAR [James A. FitzPatrick Nuclear Power Plant Updated Final Safety Analysis Report].

FitzPatrick specific analyses were performed by General Electric Company with NRC approved methods for postulated ATWS events (Reference 1 [''James A. FitzPatrick Nuclear Power Plant Anticipated Transient Without Scram Analysis, for Recirculation Pump Trip Setpoint Changes,'' General Electric Company, NEDC–32616P, July 18, 1996, Previously Docketed with NRC]). The specific events evaluated include the Main Steamline Isolation Valve closure event, Inadvertent Opening of a Relief Valve, and the Loss of Feedwater. For these events, the following acceptance criteria were established:

Peak Reactor Pressure (maximum 1 SRV out of service)—< 1500 psig

Peak Suppression Pool Temperature—< 190°F

Fuel Remains Cooled—Coolant Level > TAF [Top of Active Fuel]

The analyses demonstrate that all criteria were adequately met with the proposed TS change implemented, further ensuring no increase in the consequences of the postulated events.

The basis for changing the ARI initiation setpoint on reactor level to be consistent with that proposed for the ATWS RPT is documented in Reference 2 [JAF–ICD–NBI–;03998, Rev. 0—Alternate Rod Insertion Setpoint (an internal FitzPatrick interface document)]. The ARI initiation point is not specified in the Technical Specification.

2. Create the possibility of a new or different kind of accident from any accident previously evaluated.

The proposed TS change deals only with a reactor water level instrumentation setpoint, which initiates the ATWS–RPT/ARI function. The existing level transmitters and wiring will be used, and new analog trip units will be incorporated which are identical to existing low-low reactor water level trip units currently shared with HPCI [High Pressure Coolant Injection] and RCIC [Reactor Core Isolation Cooling] initiation. These new analog trip units are of a different design (General Electric) than those used in the Reactor Protection System (Rosemount) and therefore, the diversity requirement of 10 CFR 50.62 (c)(3) remain[s] satisfied. This allows the HPCI and RCIC setpoints to remain the same while only lowering the ATWS–RPT/ARI setpoint. The sensing, logic and actuation of the ATWS–RPT/ARI design is not modified. This includes the use of the existing one-out-of-two-twice logic, which ensures that a single failure in the circuit will not cause or inhibit the ATWS–RPT/ARI function. There are no new signals required as input, and the trip function is accomplished with the existing RPT breakers and existing scram pilot air header solenoid valves. The system does not provide input to any other plant function. The plant will not operate in any new mode nor are there any new operational requirements as a result of the proposed change. Therefore, it is not considered possible for the ATWS–RPT/ARI system to fail in any new or different way from those events currently evaluated in the JAFNPP UFSAR.

3. Involve a significant reduction in a margin of safety.

The ATWS–RPT/ARI function protects the fuel, reactor and containment from failure during a postulated ATWS event. The fuel cladding barrier is protected via adequate cooling, provided by ensuring that the core remains covered throughout the entire event. The reactor coolant system boundary is protected by ensuring compliance with the ASME [American Society of Mechanical Engineers] emergency class pressure limit of 120% of design pressure. The containment is protected by ensuring the suppression pool temperature limits are met.

FitzPatrick specific ATWS analyses were performed by postulating events that challenge each of these limits (Reference 1). With the proposed TS change considered, each of these limits were met without a need for any reduction in the margin of safety established in the JAFNPP UFSAR for the primary fission product barriers.

The NRC staff has reviewed the licensee's analysis and, based on this review, it appears that the three standards of 10 CFR 50.92(c) are satisfied. Therefore, the NRC staff proposes to determine that the amendment request involves no significant hazards consideration.

Attorney for licensee: Mr. David E. Blabey, 1633 Broadway, New York, New York 10019.

NRC Section Chief: Marsha Gamberoni, Acting.

Public Service Electric & Gas Company, Docket No. 50–354, Hope Creek Generating Station, Salem County, New Jersey

Date of amendment request: February 24, 2000.

Description of amendment request: The proposed amendment would approve a revision to the Hope Creek Generating Station Updated Final Safety Analysis Report (UFSAR) to reflect the use of the Mechanical Vacuum Pumps (MVPs) to evacuate the condenser during plant startup at power levels less than or equal to 5%. These revisions are required to make the UFSAR accident analyses associated with a Control Rod Drop Accident (CRDA) consistent with actual plant operation. Public Service Electric and Gas Company (PSE&G) has performed an engineering calculation that demonstrates that there is an increase in the radiological consequences of a CRDA coincident with MVP operation. Nuclear Regulatory Commission (NRC) approval of the proposed UFSAR changes is required, in accordance with Title 10 of the *Code of Federal Regulations* (10 CFR) Section 50.59, since these changes involve an unreviewed safety question.

Basis for proposed no significant hazards consideration determination: As required by 10 CFR 50.91(a), the licensee has provided its analysis of the issue of no significant hazards consideration, which is presented below:

1. The proposed changes do not involve a significant increase in the probability or consequences of an accident previously evaluated.

The Condenser Air Removal System has no safety-related function and its failure does not jeopardize the function of any safety-related system or component or prevent a safe shutdown of the plant. Neither the MVPs, nor other components associated with the Condenser Air Removal, Gaseous Radwaste Off-Gas, Process Radiation Monitoring, or Turbine Building HVAC [Heating, Ventilation, and Air Conditioning] systems or the South Plant Vent are design basis accident initiators. The operation of mechanical vacuum pump at power levels ≤ 5% will not increase the probability of occurrence of a main condenser air removal system leak or failure of the line leading to the steam jet air ejector (SJAE) near the main condenser. Additionally, the design and operation of the condenser off-gas system is not impacted. Moreover, MVP operation will not increase the probability of occurrence of a CRDA or any other design basis accident. Consequently, this proposal does not increase the probability of an accident previously evaluated.

The engineering calculation performed to assess the impact of the use of the MVPs demonstrated that the radiological consequences of a CRDA coincident with MVP operation increase but remain well within the 10CFR100 guidelines and meet SRP [Standard Review Plan] Section 15.4.9, Appendix A, acceptance criteria. Additionally, the calculation demonstrated that the radiological consequences of a CRDA coincident with MVP operation are within the GDC [General Design Criterion] 19 guidelines for control room personnel and plant operators and remain bounded by the loss of coolant accident analysis for on-site personnel. Therefore, although the proposal does increase the consequences of a CRDA, the proposal does not significantly increase the consequences of an accident previously evaluated.

2. The proposed change does not create the possibility of a new or different kind of accident from any accident previously evaluated.

The proposal involves crediting manual action to trip the MVPs; however, PSE&G has evaluated this operator action against the criteria in NRC Information Notice 97–78 and has concluded that adequate controls are in place to ensure that the subject manual action is taken. In addition, the proposal does not change monitor setpoints, affect equipment qualification, or otherwise create an accident initiator not previously considered. Consequently, this proposal does not create the possibility of an accident of a different type from any previously evaluated.

3. The proposed change does not involve a significant reduction in a margin of safety.

The Condenser Air Removal System has no safety-related function. Failure of the system does not jeopardize the function of any safety-related system or component or prevent a safe shutdown of the plant.

The radiological activity evaluated in this proposal does not result in scenarios that could impact 10 CFR 50 Appendix I, 10 CFR 20, or 40 CFR 190 release criteria. Post-scram shutdown or startup condition MVP operation in accordance with plant operating procedures will not degrade the original design for the Condenser Air Removal System.

An engineering calculation was prepared that demonstrated that the radiological consequences of a CRDA coincident with MVP operation remain well within the 10 CFR 100 guidelines and that the consequences meet SRP Section 15.4.9, Appendix A, acceptance criteria. Additionally, the engineering calculation demonstrated that the radiological

consequences of a CRDA coincident with MVP operation are within GDC 19 guidelines for control room personnel and plant operators and remain bounded by the loss of coolant accident analysis for on-site personnel.

Since no design bases are degraded, the Technical Specifications operating limits, that provide sufficient operating range such that the acceptance limits are not exceeded during plant operations and analyzed transients, are not [ ] affected. Since the acceptance limits are not exceeded, implementation of this proposal does not reduce the margin of safety as described in the basis for any Technical Specifications.

The NRC staff has reviewed the licensee's analysis and, based on this review, it appears that the three standards of 10 CFR 50.92(c) are satisfied. Therefore, the NRC staff proposes to determine that the amendment request involves no significant hazards consideration.

Attorney for licensee: Jeffrie J. Keenan, Esquire, Nuclear Business Unit—N21, P.O. Box 236, Hancocks Bridge, NJ 08038. *NRC Section Chief:* James W. Clifford.

Southern California Edison Company, et al., Docket Nos. 50–361 and 50–362, San Onofre Nuclear Generating Station, Units 2 and 3, San Diego County, California

Date of amendment requests: February 23, 2000 (PCN 508).

Description of amendment requests: The amendment application is a request to allow an option regarding the methodology for measuring the reactivity worth of control element assembly (CEA) groups for San Onofre Nuclear Generating Station (SONGS) Units 2 and 3 during low-power physics testing following a refueling. The proposed option involves measuring the worth of approximately three-fourths of the full-length CEA groups each refueling cycle rather than the present methodology, which measures the worth of all full-length CEA groups each refueling cycle. Measured CEA groups would be rotated such that each full-length group would be measured at least every other refueling. The licensee has determined this change to involve an unreviewed safety question.

Basis for proposed no significant hazards consideration determination: As required by 10 CFR 50.91(a), the licensee has provided its analysis of the issue of no significant hazards consideration, which is presented below:

(1) Does the proposed amendment involve a significant increase in the probability or consequences of an accident previously evaluated?

No. The proposed option to the Low Power Physics Test (LPPT) program will involve performance of rod worth measurements of typically six of eight full-length control element assembly (CEA) groups each refueling, rather than performance of rod worth measurements of all eight CEA groups each refueling. Thus, the LPPT option will result in a reduction in the number of plant manipulations required for LPPT. Inverse Boron Worth (IBW) is not required in the proposed LPPT program option, but it may be determined during the performance of a boration or dilution, which is already a part of the present LPPT program. The manipulations which will be performed are a subset of the evolutions which are performed in the existing test sequence. Therefore, the LPPT testing option does not carry any increased risk of any accident evaluated in Chapter 15 of the Updated Final Safety Analysis Report (UFSAR). Since the number and duration of manipulations are reduced, there would actually be a small reduction in accident potential.

The proposed test program option will not compromise the technical objectives of the LPPT program. Fuel fabrication, core and reactor internals reassembly, CEA worths, mechanical integrity and reliability, performance of core physics design codes and consistency with design and safety analysis expectations will remain validated with the same effectiveness as is achieved in the current program. In addition, the reduced duration of operation in the LPPT Special Test Exception of the Technical Specifications has a positive impact on nuclear safety.

Therefore, the proposed LPPT program option does not involve a significant increase in the probability of an accident previously evaluated.

The proposed test program option will eliminate CEA exchange measurements and determine CEA worth by dilution/boration measurements. Measurement of CEA worth by the dilution/boration methods achieves typically higher quality results than the CEA Exchange method.

The proposed LPPT program option does not include the requirement to measure inverse boron worth. However, a measured initial critical boron concentration and measured CEA group worths that match predicted values within acceptance criteria are sufficient to verify adequate core physics modeling without a separate IBW measurement.

Since the proposed test sequence option continues to ensure that core operation and reactivity control are consistent with design expectations, the proposed LPPT option will not involve a significant increase in the consequences of an accident previously evaluated.

Therefore, the proposed LPPT program option does not involve a significant increase in the probability or consequences of an accident previously evaluated.

(2) Does the amendment request create the possibility of a new or different kind of accident from any accident previously evaluated?

No. The proposed LPPT program option does not create any plant condition or manipulation which is materially different from those of the existing program. Furthermore, the number of manipulations and duration of Special Test Exceptions are significantly reduced. The proposed LPPT program option relies entirely on conventional boration and dilution rod worth measurement test methods which have been industry standards. The methodology used to measure IBW, if performed, does not introduce any new evolutions during LPPT and cannot create a new or different type of accident.

Therefore, the proposed LPPT program option does not create the possibility of a new or different kind of accident from any accident previously evaluated.

(3) Does this amendment request involve a significant reduction in a margin of safety?

No. The proposed LPPT program option fully achieves objectives of the reload test program by validating fuel fabrication, core reassembly, CEA worths, mechanical integrity and reliability, performance of physics design codes and consistency with design and safety analysis expectations with the same effectiveness as is achieved in the current program. As a result, all assumptions made in support of UFSAR Chapter 15 Safety Analyses regarding CEA performance remain valid.

The effectiveness of the SONGS 2 & 3 Reload Test program, including LPPT and Power Ascension Testing, has been evaluated and shown to be uncompromised by the proposed LPPT option. Specific testing requirements imposed by the Nuclear Regulatory Commission are captured in Technical Specification Surveillance Requirements. The proposed LPPT program option is fully compliant with existing Technical Specification Surveillance Requirements and validates the core physics models regarding core performance, reactivity control and proper core reassembly to an extent equivalent to that of the present program.

The proposed LPPT program option is also consistent with the recently modified ANSI/ANS 19.6.1–1997 standard for Pressurized Water Reactor reload testing, with the exception of the requirement and methodology to determine IBW. The ANSI/ANS standard was developed with participation from industry and NRC representatives and represents an expert panel assessment of what is appropriate for an LPPT program. A measured initial critical boron concentration and measured CEA group worths that match predicted values within acceptance criteria are sufficient to verify adequate core physics modeling, and infer that the IBW value is within standard acceptance critieria, without a separate IBW measurement.

Therefore, the proposed LPPT program option does not involve a significant reduction in a margin of safety.

The NRC staff has reviewed the licensee's analysis and, based on this review, it appears that the three standards of 10 CFR 50.92(c) are satisfied. Therefore, the NRC staff proposes to determine that the amendment requests involve no significant hazards consideration.

Attorney for licensee: Douglas K. Porter, Esquire, Southern California Edison Company, 2244 Walnut Grove Avenue, Rosemead, California 91770.

NRC Section Chief: Stephen Dembek.

Southern Nuclear Operating Company, Inc., et al., Docket Nos. 50–424 and 50–425, Vogtle Electric Generating Plant, Units 1 and 2, Burke County, Georgia

Date of amendment request: August 24, 1999, as supplemented on December 29, 1999.

Description of amendment request: The proposed amendments would revise the Technical Specifications (TS) 3.3.2 ''Engineered Safety Feature Actuation System (ESFAS) Instrumentation'' to relax the slave relay test frequency from quarterly to a refueling frequency.

Basis for proposed no significant hazards consideration determination: As required by 10 CFR 50.91(a), the licensee has provided its analysis of the issue of no significant hazards consideration, which is presented below:

1. Does the change involve a significant increase in the probability or consequences of an accident previously evaluated?

The results of WCAP–13878 demonstrate that slave relays are highly reliable. WCAP–13878 also provides guidance to assure that slave relays remain highly reliable. The aging assessment concludes that the age/temperature-related degradation of all ND relays, and NE relays produced after 1992, is sufficiently slow such that a refueling frequency surveillance interval will not significantly increase the probability of slave relay failures. Finally, the evaluation of the auxiliary relays actuated during slave relay testing has concluded that based on the tests of the auxiliary relays performed during other equipment testing, reasonable assurance is provided that failures will be identified if the associated slave relays are tested on a refueling frequency.

Therefore, the proposed changes do not involve a significant increase in the probability or consequences of an accident previously evaluated.

2. Does the change create the possibility of a new or different kind of accident from any accident previously evaluated?

The proposed changes do not alter the performance of the ESFAS mitigation systems assumed in the plant safety analysis. Changing the interval for periodically verifying ESFAS slave relays (assuring equipment operability) will not create any new accident initiators or scenarios.

Therefore, the proposed changes do not create the possibility of a new or different kind of accident from any accident previously evaluated for VEGP.

3. Does the change involve a significant reduction in a margin of safety?

The proposed changes do not affect the total ESFAS response assumed in the safety analysis since the reliability of the slave relays will not be significantly affected by the decreased surveillance frequency.

Therefore, the proposed changes do not involve a significant reduction in a margin of safety.

The NRC staff has reviewed the licensee's analysis and, based on this review, it appears that the three standards of 10 CFR 50.92(c) are satisfied. Therefore, the NRC staff proposes to determine that the amendment request involves no significant hazards consideration.

Attorney for licensee: Mr. Arthur H. Domby, Troutman Sanders, NationsBank Plaza, Suite 5200, 600 Peachtree Street, NE., Atlanta, Georgia 30308–2216.

NRC Section Chief: Richard L. Emch, Jr.

STP Nuclear Operating Company, Docket No. 50–499, South Texas Project, Unit 2, Matagorda County, Texas

Date of amendment request: February 21, 2000.

Description of amendment request: STP Nuclear Operating Company proposes to amend the South Texas Project (STP), Unit 2 technical specifications (TS) so that steam generator tube eddy-current inspection indications of less than or equal to 3.0 volts can be left in service if found at intersections of tube hot-leg tube-support-plates C through M (3.0-volt alternate repair criteria). The new alternate repair criteria would apply only until the Unit 2 Model E steam generators are replaced during the outage currently scheduled to commence in fall of 2002. STP Nuclear Operating Company also proposes to amend the STP, Unit 2 TS to make an editorial correction to Note 1 and Note 2, on page 3/4–16a to align the notes with the preceding paragraph. STP Nuclear Operating Company also provided, for information only, changes to the Bases for TS 3/4.4.5 to provide the structural margins and Westinghouse topical report references used as the bases for the use of the 3.0-volt alternate repair criteria.

Basis for proposed no significant hazards consideration determination: As required by 10 CFR 50.91(a), the licensee has provided its analysis of the issue of no significant hazards consideration, which is presented below:

In accordance with the criteria set forth in 10 CFR 50.92, the STP Nuclear Operating Company (STPNOC) has evaluated these proposed Technical Specification changes and determined they do not represent a significant hazards consideration. Conformance of the proposed amendment to the standards for a determination of no significant hazard as defined by the criteria set forth in 10 CFR 50.92 is shown in the following discussions addressed to each criterion:

(1) Does the change involve a significant increase in the probability or consequences of an accident previously evaluated?

During the limiting design-basis steam-line-break (SLB) event, South Texas Project (STP) Unit 2 steam generator tube burst criteria are inherently satisfied for marginally degraded (primarily axially-oriented ODSCC [outer diameter stress corrosion cracking]) tube spans at certain tube support plate (TSP) intersections.

Steam generator tubes pass through holes drilled in the TSP. The inside diameter (ID) of the drilled holes closely approximates the outside diameter (OD) of the tubes. Generally, the TSP precludes those tube spans within the drilled holes from deforming beyond the diameters of the drilled holes, thus, precluding tube burst in the restrained regions. However, design basis SLB events may vertically displace a TSP, removing its support from the tube spans passing through it. For TSP C through M, maximum displacement during a postulated SLB event is less than 0.15 inch. Because TSP C through M remain essentially stationary during all conditions, tube spans included within the drilled holes are restrained during the limiting SLB event. Thus, the tube burst margin for intersections of tube hot-legs and TSP C through M is independent of voltage related growth rates and the proposed 3-volt ARC [alternate repair criteria] is compliant with RG [Regulatory Guide] 1.121 [Bases for Plugging Degraded PWR Steam Generator Tubes] criteria.

Given a TSP displacement of < 0.15 inch, tube hot-leg spans enclosed within TSP C through M have a negligible tube burst probability of less than 10^{-10} for a single tube. This is eight orders of magnitude less than the 10^{-2} probability-of-burst criterion specified by GL [Generic Letter] 95–05 [Voltage-Based Repair Criteria for Westinghouse Steam Generator Tubes Affected by Outside Diameter Stress Corrosion Cracking] and represents negligible axial tube burst probabilities for tube hot-leg spans intersecting TSP C through M. Thus, repair limits to preclude burst are not needed and tube repair limits may be based primarily on limiting leakage to acceptable levels during accident conditions.

Cracks that include cellular corrosion may yield to axial loads, resulting in tensile tearing of the tube at that location. A tensile load requirement to prevent this establishes a structural limit for the tube expansion based plugging criterion. In order to establish a lower bound for the structural limit, tensile tests were used to measure the force required to separate a tube that exhibits cellular corrosion. Additionally, pulled tubes with cellular and/or inter-granular attack (IGA) tube wall degradation were evaluated and the tensile strength of the tube conservatively calculated from the remaining non-corroded cross-section of the tube. This calculation assumes that the degraded portions contribute nothing to the axial load carrying ability of the tube. Data from these tests shows that circumferential cracks exhibiting

bobbin-coil-probe-indication-voltages greater than 35 volts require tube-pressure-differentials well above the operating limit of 3-times-normal differential pressure in order to produce circumferential ruptures (i.e., axial separation at the plane of the crack). This proposal specifies a structural limit of 17 volts (safety factor of 2) to ensure conservative results for repairs at intersections of tubes with TSP C through M.

GL 95–05 states that licensees must perform SLB leak rate and tube burst probability analyses before returning to power from outages during which they perform steam generator inspections. Licensees must include the results in a report to the NRC within 90 days after restart. If an analysis reveals that leak-rate or burst-probability exceeds limits, the licensee must report it to the NRC and assess the safety significance of this finding. Model E steam generator SLB leak rates are calculated for indications found at intersections of tube hot-legs and TSP. Both SLB leak rate and tube burst probability are calculated for tube hot-leg intersections with FDB [flow distribution baffles], hot-leg intersections with TSP N through R, and indications found at intersections of tube cold-legs with any TSP.

It has been established that the design basis main SLB outside of containment and upstream of the MSIV [main steam isolation valves] produces the limiting radiological consequence from any tube leakage that may be postulated to exist at the initiation of an accident. With use of 3-volt ARC, STPNOC [STP Nuclear Operating Company] will calculate the maximum primary-to-secondary leakage for the last day of the coming steam generator service-cycle and use this value to calculate the radiological consequence of the limiting SLB event. This methodology will ensure that site boundary doses for this accident remain within an acceptable fraction of the 10 CFR 100 guidelines and that doses to the control room operators remain within GDC 19 [10 CFR Part 50, Appendix A, General Design Criterion] limits.

Based on the above, STPNOC concludes that operation of South Texas Project Unit 2 in accordance with the proposed license amendment does not involve a significant increase in the probability or consequences of an accident previously evaluated.

(2) Does the change create the possibility of a new or different kind of accident from any accident previously evaluated?

Use of the proposed steam generator tube 3-volt ARC does not significantly change circumstances or conclusions assumed by the plant design basis. Application of the 3-volt ARC does not significantly increase the probability of either single or multiple tube ruptures. Steam generator tube integrity remains adequate for all plant operating conditions.

STPNOC has confirmed that the allowed post-accident primary-to-secondary leakage rate for SLB events results in the limiting offsite and control room doses for South Texas Project Unit 2. A projected SLB leak rate of 15.4 gpm is calculated to produce doses 90% of the currently licensed South Texas Project Unit 2 dose limits (Reference 2 [STPNOC letter dated July 15, 1998, NOC–AE–000228, Response to NRC Request for Additional Information related to STP Unit 2 Amendment No. 83]). STPNOC TS impose a normal leak rate limit of 150 gpd (0.1 gpm) per steam generator to minimize the potential for excessive leakage during all plant conditions. The 150 gpd limit provides added margin to accommodate contingent leakage should a stress corrosion crack grow at a greater than expected rate or extend outside the TSP. Leakage trending consistent with EPRI Report TR–04788, ''PWR Primary-to-Secondary Leak Guidelines'' has been established for South Texas Project Unit 2.

Since steam generator tube integrity will meet GL 95–05 requirements and be confirmed through in-service inspection and primary-to-secondary leakage monitoring, the proposed license amendment does not create the possibility of a new or different kind of accident from any accident previously evaluated.

(3) Does this change involve a significant reduction in a margin of safety?

RG 1.121 describes a method for meeting GDC 14, 15, 31, and 32 by reducing the probability or consequences of steam-generator tube-rupture through application of criteria for removing degraded tubes from service. These criteria set limits of degradation for steam generator tubing through in-service inspection. Analyses show that tube integrity will remain consistent with the criteria of Regulatory Guide 1.121 after implementation of the proposed 3-volt ARC. Even under the worst case ODSCC occurrence at TSP elevations, 3-volt ARC will not cause or significantly increase [the] probability of a steam-generator tube-rupture event.

In addressing combined LOCA [loss-of-coolant accident] + SSE [safe-shutdown earthquake] effects on steam generator components as required by GDC 2, analysis has shown that tube collapse may occur in certain regions of the steam generators of some plants. This collapse is caused by TSP plastic deformation in the region of the TSP wedge supports. Plastic deformation occurs when TSP experience large lateral loads concentrated at wedge support points on the periphery of a TSP undergoing combined loading effects of a LOCA rarefaction wave and SSE. Deformation impinges on TSP apertures through which tubes pass, deflecting tube walls inward. The resulting pressure differential across deformed tube walls may cause some tubes to collapse.

There are two issues associated with steam generator tube collapse. First, collapse of steam generator tubing reduces RCS [reactor coolant system] flow. RCS flow reduction increases resistance to heat flow from the core during a LOCA, increasing Peak Clad Temperature (PCT). Second, partial through-wall tube-cracks could become full through-wall tube-cracks during tube deformation or collapse. Tubes in regions affected by this phenomenon are usually excluded from evaluation under 3-volt ARC. STP Model E steam generator design does not produce this plastic deformation, thus is not subject to tube collapse. No STP Unit 2 tubes are excluded, for this reason, from application of the proposed 3-volt ARC.

End of Cycle (EOC) distribution of crack indications at affected TSP elevations will be confirmed to allow no more than the acceptable primary-to-secondary leakage rate during all plant conditions and not adversely affect radiological dose consequences. For the limiting SLB event, STPNOC will calculate leak rates as free-span leakage for ODSCC indications at tube and TSP intersections. The calculations will use GL 95–05 leak rate methods with an additional component for potentially overpressurized indications [discussed in detail in the Safety Evaluation section of the licensee's February 21, 2000, application under the heading ''SLB Leak Rate and Tube Burst Probability Considerations'']. Inspections conducted in accordance with RG 1.83, Rev. 1 [In Service Inspection of Pressurized Water Reactor Steam Generator Tubes], using 3-volt ARC for intersections of tube hot-legs with TSP C through M, and using 1-volt ARC at remaining hot-leg and cold-leg intersections will be supplemented by:

(1) enhanced eddy current inspection procedures to achieve consistency in voltage normalization,

(2) eddy current inspection of 100% of tubes found, using inspection of a 20% tube sample, to have ODSCC at intersections with TSP, and

(3) a required RPC [rotating pancake coil] inspection of the larger indications to confirm that the principal degradation mechanism continues to be ODSCC.

Plugging steam generator tubes reduces RCS flow margin. As previously noted, increasing repair limits for indications found at TSP intersections will reduce the number of tubes that must be plugged. Thus, 3-volt ARC will conserve RCS flow margin, preserving operational and safety benefits that would otherwise be reduced by unnecessary plugging.

Therefore, the proposed license amendment does not result in a significant increase in dose consequences represented in the current licensing basis, and does not involve a significant reduction in margin of safety.

The NRC staff has reviewed the licensee's analysis and, based on this review, it appears that the standards of 10 CFR 50.92(c) are satisfied. The staff also reviewed the proposed editorial change for no significant hazards consideration. The proposed editorial correction does not affect the design or operation of the facility and satisfies the three standards of 10 CFR 50.92(c). Therefore, the NRC staff proposes to determine that the request for amendments involves no significant hazards consideration.

Attorney for licensee: Jack R. Newman, Esq., Morgan, Lewis & Bockius, 1800 M Street, NW., Washington, DC 20036–5869.

NRC Section Chief: Robert A. Gramm.

Virginia Electric and Power Company, Docket Nos. 50–280 and 50–281, Surry Power Station, Units No. 1 and No. 2, Surry County, Virginia

Date of amendment request: November 29, 1999.

Description of amendment request: The proposed changes will modify the Technical Specifications (TS) in Section 3.23 for the Main Control Room and Emergency Switchgear Room Ventilation and Air Conditioning Systems; TS Surveillance Requirement Sections 4.20, Basis 4.20.A.7, and 4.20.B.4 for the Control Room Air Filtration System; and TS Surveillance Requirement Sections 4.12.A.6, 4.12.A.7, 4.12.A.8, 4.12.B.7, and 4.12 Basis for the Auxiliary Ventilation Exhaust Filter Trains. The proposed changes will revise the above Surveillance Requirements for the laboratory testing of the carbon samples for methyl iodide removal efficiency to be consistent with American Society for Testing and Materials (ASTM) Standard D3803–1989, ''Standard Test Method for Nuclear-Graded Activated Carbon,'' with qualification, as the laboratory testing standard for both new and used charcoal adsorbent used in the ventilation system.

Basis for proposed no significant hazards consideration determination: In 10 CFR 50.92, three criteria are provided to determine whether a proposed license amendment involves a significant hazards consideration. No significant hazards consideration is involved if operation of the facility with the proposed amendment would not: (1) Involve a significant increase in the probability or consequences of an accident previously evaluated; or (2) Create the possibility of a new or different kind of accident from any accident previously evaluated; or (3) Involve a significant reduction in a margin of safety. As required by 10 CFR 50.91(a), the licensee has provided its analysis of the issue of no significant hazards consideration, which is presented below:

Virginia Electric and Power Company has reviewed the requirements of 10 CFR 50.92 as they relate to the proposed changes for Surry Units 1 and 2 and determined that a significant hazards consideration is not involved. The proposed Technical Specification changes adopt the nuclear-grade charcoal testing requirements of ASTM D3803–1989, with qualification, for methyl iodide removal efficiency and the requirements of ASTM D3803–1979, with qualification, for elemental iodine removal efficiency. The method of testing nuclear-grade activated charcoal does not affect the design or operation of the plant. The changes also do not involve any physical modification to the plant or result in a change in a method of system operation. The adoption of the 1989 edition of ASTM D3803 for methyl iodide testing conforms with approved guidance for testing of nuclear-grade activated charcoal. This provides assurance that testing of ventilation systems is being performed with a suitable standard to ensure that charcoal adsorbers are capable of performing their required safety function and that the regulatory requirements regarding onsite and offsite dose consequences continue to be satisfied. The changes do not create an unreviewed safety question.

(a) The proposed changes modify surveillance testing requirements and do not affect plant systems or operation and therefore do not increase the probability or the consequences of an accident previously evaluated. The proposed surveillance requirements adopt ASTM D3803–1989, with qualification, as the laboratory method for testing samples of the charcoal adsorber for methyl iodide removal efficiency in response to NRC's Generic Letter 99–02. This method of testing charcoal adsorbers has been approved by the NRC as an acceptable method for determining methyl iodide removal efficiency. Since the charcoal adsorbers are used to mitigate the consequences of an accident, the more accurate the test, the better assurance we have that we remain within our accident analysis assumptions. Testing of the charcoal adsorbers' efficiency for removing elemental iodine is performed in accordance with the 1979 version of ASTM D3803 since the 1989 version does not address elemental iodine removal efficiencies. The laboratory test acceptance criteria contain a safety factor to ensure that the efficiency assumed in the accident analysis is still valid at the end of the operating cycle. There is no change in the method of plant operation or system design.

(b) The proposed changes modify surveillance testing requirements and do not impact plant systems or operations and therefore do not create the possibility of an accident or malfunction of a different type than evaluated previously. The proposed surveillance requirements adopt ASTM D3803–1989, with qualification, as the laboratory method for testing samples of the charcoal adsorber for methyl iodide removal efficiency. This change is in response to NRC's request in Generic Letter 99–02. Testing of the charcoal adsorbers' efficiency for removing elemental iodine is performed in accordance with the 1979 version of ASTM D3803 since the 1989 version does not address elemental iodine removal efficiencies. There is no change in the method of plant operation or system design. There are no new or different accident scenarios, transient precursors, nor failure mechanisms that will be introduced.

(c) The proposed changes modify surveillance test requirements and do not impact plant systems or operations and therefore do not significantly reduce the margin of safety. The revised surveillance requirements adopt ASTM D3803–1989, with qualification, as the laboratory method for testing samples of the charcoal adsorber for methyl iodide removal efficiency. The 1989 edition of this standard imposes very stringent requirements for establishing the capability of new and used activated carbon to remove methyl iodide from air and gas streams. The results of this test provide a more conservative estimate of the performance of nuclear-graded activated carbon used in nuclear power plant HVAC [heating, ventilation, and air conditioning] systems for the removal of methyl iodide. Testing of the charcoal adsorbers' efficiency for removing elemental iodine is performed in accordance with the 1979 version of ASTM D3803 since the 1989 version does not address elemental iodine removal efficiencies. The laboratory test acceptance criteria contain a safety factor to ensure that the efficiency assumed in the accident analysis is still valid at the end of the operating cycle.

The NRC staff has reviewed the licensee's analysis and, based on this review, it appears that the three standards of 50.92(c) are satisfied. Therefore, the NRC staff proposes to determine that the amendment request involves no significant hazards consideration.

Attorney for licensee: Mr. Donald P. Irwin, Esq., Hunton and Williams, Riverfront Plaza, East Tower, 951 E. Byrd Street, Richmond, Virginia 23219.

NRC Section Chief: Richard L. Emch, Jr.

Previously Published Notices of Consideration of Issuance of Amendments to Facility Operating Licenses, Proposed No Significant Hazards Consideration Determination, and Opportunity for a Hearing

The following notices were previously published as separate individual notices. The notice content was the same as above. They were published as individual notices either because time did not allow the Commission to wait for this biweekly notice or because the action involved exigent circumstances. They are repeated here because the biweekly notice lists all amendments issued or proposed to be issued involving no significant hazards consideration.

For details, see the individual notice in the **Federal Register** on the day and page cited. This notice does not extend the notice period of the original notice.

Consumers Energy Company, Docket No. 50–255, Palisades Plant, Van Buren County, Michigan

Date of amendment request: February 18, 2000.

Brief description of amendment request: The amendment changes current Technical Specification (TS) 4.9a.2 and improved TS 3.7.5 and its associated bases to remove requirements associated with the backup steam supply to turbine-driven auxiliary feedwater pump P–8B.

Date of publication of individual notice in ***Federal Register:*** March 1, 2000 (65 FR 11089)

Expiration date of individual notice: Comment period expired March 14, 2000; Notice period expires March 31, 2000.

Tennessee Valley Authority, Docket No. 50–390 Watts Bar Nuclear Plant, Unit 1, Rhea County, Tennessee

Date of application for amendments: February 25, 2000.

Brief description of amendments: The amendment revises Technical Specification Table 3.3.2–1, ''Engineered Safety Feature Actuation System Instrumentation'' to provide a one-time exception, until the next time the turbine is removed from service, from the requirement to perform response time testing for the solenoid valve 1–FSV–47–027.

Date of publication of individual notice in the ***Federal Register:*** March 2, 2000.

Expiration date of individual notice: March 16, 2000.

Union Electric Company, Docket No. 50–483, Callaway Plant, Unit 1, Callaway County, Missouri

Date of application for amendment: January 14, 2000, as supplemented by letter dated February 17, 2000 (ULNRC–04172 and –04187).

Brief description of amendment request: The amendment would revise several sections of the improved Technical Specification (ITSs) to correct 14 editorial errors made in either (1) the application dated May 15, 1997, (and supplementary letters) for the ITSs, or (2) the certified copy of the ITSs that was submitted in the licensee's letters of May 27 and 28, 1999. The ITSs were issued as Amendment No. 133 by the staff in its letter of May 28, 1999, and will be implemented by the licensee to replace the current TSs by April 30, 2000.

Date of publication of individual notice in ***Federal Register:*** February 25, 2000 (65 FR 10118).

Expiration date of individual notice: March 27, 2000.

Notice of Issuance of Amendments to Facility Operating Licenses

During the period since publication of the last biweekly notice, the Commission has issued the following amendments. The Commission has determined for each of these amendments that the application complies with the standards and requirements of the Atomic Energy Act of 1954, as amended (the Act), and the Commission's rules and regulations. The Commission has made appropriate findings as required by the Act and the Commission's rules and regulations in 10 CFR Chapter I, which are set forth in the license amendment.

Notice of Consideration of Issuance of Amendment to Facility Operating License, Proposed No Significant Hazards Consideration Determination, and Opportunity for A Hearing in connection with these actions was published in the **Federal Register** as indicated.

Unless otherwise indicated, the Commission has determined that these amendments satisfy the criteria for categorical exclusion in accordance with 10 CFR 51.22. Therefore, pursuant to 10 CFR 51.22(b), no environmental impact statement or environmental assessment need be prepared for these amendments. If the Commission has prepared an environmental assessment under the special circumstances provision in 10 CFR 51.12(b) and has made a determination based on that assessment, it is so indicated.

For further details with respect to the action see (1) the applications for amendment, (2) the amendment, and (3) the Commission's related letter, Safety Evaluation and/or Environmental Assessment as indicated. All of these items are available for public inspection at the Commission's Public Document Room, the Gelman Building, 2120 L Street, NW., Washington, DC, and electronically from the ADAMS Public Library component on the NRC Web site, *http://www.nrc.gov* (the Electronic Reading Room).

AmerGen Energy Company, LLC, Docket No. 50–461, Clinton Power Station, Unit 1, DeWitt County, Illinois

Date of application for amendment: March 1, 1999.

Brief description of amendment: The amendment approves changes to the Updated Safety Analysis Report concerning design requirements for physical protection from tornado missiles.

Date of issuance: February 29, 2000.

Effective date: February 29, 2000.

Amendment No.: 124.

Facility Operating License No. NPF–62: The amendment allows a change to the Updated Safety Analyis Report concerning tornado missile protection.

Date of initial notice in ***Federal Register:*** April 21, 1999 (64 FR 19558).

The Commission's related evaluation of the amendment is contained in a Safety Evaluation dated February 29, 2000.

No significant hazards consideration comments received: No.

AmerGen Energy Co., LLC, Docket No. 50–289, Three Mile Island Nuclear Station, Unit 1, Dauphin County, Pennsylvania

Date of application for amendment: June 4, 1999, as supplemented December 13, 1999.

Brief description of amendment: The amendment modified the limiting conditions for operation in the Technical Specifications (TSs) under which a reduction in the number of means of decay heat removal (DHR) capability may occur by deleting two of these conditions. The amendment also makes related Bases changes and clarifies the DHR requirements for redundancy.

Date of issuance: February 28, 2000.

Effective date: As of the date of issuance to be implemented within 30 days.

Amendment No.: 220.

Facility Operating License No. DPR–50. This amendment revised the Technical Specifications.

Date of initial notice in ***Federal Register:*** June 30, 1999 (64 FR 35207). The December 13, 1999, letter withdrew a Bases change of the June 4, 1999, application and did not change the initial proposed no significant hazards consideration determination or expand the amendment beyond the scope of the initial notice.

The Commission's related evaluation of the amendment is contained in a Safety Evaluation dated February 28, 2000.

No significant hazards consideration comments received: No.

AmerGen Energy Company, LLC, Docket No. 50–289, Three Mile Island Nuclear Station, Unit 1 (TMI–1), Dauphin County, Pennsylvania

Date of application for amendment: May 26, 1999.

Brief description of amendment: The amendment authorized changes to Chapters 5 and 14 of the Updated Final Safety Analysis Report (UFSAR). The changes reflect the use of an Electric Power Research Institute-developed Conservative Deterministic Failure Margin methodology for seismic analysis of the portions of the nonsafety-related auxiliary steam line piping located in the Auxiliary, Control, and Fuel Handling buildings at TMI–1.

Date of issuance: March 10, 2000.

Effective date: As of the date of issuance and shall be implemented within 30 days.

Amendment No.: 221.

Facility Operating License No. DPR–50. Amendment authorizes changes to the UFSAR.

Date of initial notice in ***Federal Register:*** June 30, 1999 (64 FR 35207). The Commission's related evaluation of the amendment is contained in a Safety Evaluation dated March 10, 2000.

No significant hazards consideration comments received: No.

Arizona Public Service Company, et al., Docket Nos. STN 50–528, STN 50–529, and STN 50–530, Palo Verde Nuclear Generating Station, Units Nos. 1, 2, and 3, Maricopa County, Arizona

Date of application for amendments: June 8, 1999, as supplemented July 20 and November 24, 1999.

Brief description of amendments: The amendments revise the Technical Specifications to increase the storage capacity of spent fuel in the fuel storage pools by allowing credit for soluble boron and decay time in the safety analysis, and to increase the maximum radially averaged fuel enrichment from 4.3 weight percent to 4.8 weight percent.

Date of issuance: March 2, 2000.

Effective date: March 2, 2000.

Amendment Nos.: Unit 1–125, Unit 2–125, Unit 3–125.

Facility Operating License Nos. NPF–41, NPF–51, and NPF–74: The amendments revised the Technical Specifications.

Date of initial notice in ***Federal Register:*** September 20, 1999 (64 FR 50835). The July 20 and November 24, 1999, letters provided additional clarifying information that was within the scope of the original application and **Federal Register** notice and did not change the staff's initial proposed no significant hazards consideration determination. The Commission's related evaluation of the amendment is contained in a Safety Evaluation dated March 2, 2000.

No significant hazards consideration comments received: No.

Carolina Power & Light Company, et al., Docket No. 325, Brunswick Steam Electric Plant, Unit 1, Brunswick County, North Carolina

Date of amendment request: September 28, 1999.

Brief description of amendment: The amendment changes the Technical Specifications (TS) in response to your submittal dated September 28, 1999. The amendment revises TS 2.1.1.2, ''Reactor Core Safety Limits,'' and TS 5.6.5, ''Core Operating Limits Report,'' by removing safety limit restrictions which are no longer applicable.

Date of issuance: March 1, 2000.

Effective date: March 1, 2000.

Amendment No.: 207.

Facility Operating License No. DPR–71: Amendment revises the Technical Specifications.

Date of initial notice in ***Federal Register:*** November 3, 1999 (64 FR 59797).

The Commission's related evaluation of the amendment is contained in a Safety Evaluation dated March 1, 2000.

No significant hazards consideration comments received: No.

Carolina Power & Light Company, et al., Docket No. 50–325, Brunswick Steam Electric Plant, Unit 1, Brunswick County, North Carolina

Date of amendment request: November 17, 1999.

Brief description of amendment: The amendment changes the Technical Specifications (TS) in response to the licensee's submittal dated September 28, 1999. The amendment revises TS 2.1.1.2, ''Reactor Core Safety Limits,'' by changing the Minimum Critical Power Ratio.

Date of issuance: March 1, 2000.

Effective date: March 1, 2000.

Amendment No.: 208.

Facility Operating License No. DPR–71: Amendment revises the Technical Specifications.

Date of initial notice in ***Federal Register:*** December 15, 1999 (64 FR 70080).

The Commission's related evaluation of the amendment is contained in a Safety Evaluation dated March 1, 2000.

No significant hazards consideration comments received: No.

Commonwealth Edison Company, Docket Nos. STN 50–454 and STN 50–455, Byron Station, Unit Nos. 1 and 2, Ogle County, Illinois; Docket Nos. STN 50–456 and STN 50–457, Braidwood Station, Unit Nos. 1 and 2, Will County, Illinois

Date of application for amendments: March 23, 1999, as supplemented on October 21, 1999, and December 15, 1999.

Brief description of amendments: The amendments approved the installation of new Boral high density spent fuel storage racks at Byron and Braidwood stations. The amendments also approved an increase in the spent fuel pool storage capacity from 2,870 assemblies to 2,984 assemblies at each station.

Date of issuance: March 1, 2000.

Effective date: Immediately, to be implemented within 30 days.

Amendment Nos.: 112 and 105.

Facility Operating License Nos. NPF–37, NPF–66, NPF–72 and NPF–77: The amendments revised the Technical Specifications.

Date of initial notice in ***Federal Register:*** June 16, 1999 (64 FR 32280). The October 21 and December 15, 1999, supplements did not change the initial proposed no significant hazards consideration determination.

The Commission's related evaluation of the amendments is contained in a Safety Evaluation dated March 1, 2000.

No significant hazards consideration comments received: No.

Commonwealth Edison Company, Docket Nos. 50–254 and 50–265, Quad Cities Nuclear Power Station, Units 1 and 2, Rock Island County, Illinois

Date of application for amendments: October 12, 1999.

Brief description of amendments: The amendments revised Technical Specification (TS) 2.2, ''Limiting Safety System Settings,'' and TS 3/4.1.A, ''Reactor Protection System,'' to remove an anticipatory reactor scram signal, the turbine electro-hydraulic control (EHC) low oil pressure trip, from the reactor protection system trip function requirements.

Date of issuance: January 28, 2000.

Effective date: Immediately, to be implemented within 30 days.

Amendment Nos.: 193 & 189.

Facility Operating License Nos. DPR–29 and DPR–30: The amendments revised the Technical Specifications.

Date of initial notice in ***Federal Register:*** December 1, 1999 (64 FR 67331).

The Commission's related evaluation of the amendments is contained in a Safety Evaluation dated January 28, 2000.

No significant hazards consideration comments received: No.

Commonwealth Edison Company, Docket Nos. 50–254 and 50–265, Quad Cities Nuclear Power Station, Units 1 and 2, Rock Island County, Illinois

Date of application for amendments: November 16, 1999.

Brief description of amendments: The amendments change Technical Specification Table 4.1.A–1, ''Reactor Protection System Instrumentation Surveillance Requirements,'' to modify the surveillance requirements for Functional Unit 3, ''Reactor Vessel Steam Dome Pressure—High,'' to reflect replacement of the pressure switches with analog trip units.

Date of issuance: January 28, 2000.

Effective date: Immediately, to be implemented before startup from Refueling Outage 16 for Unit 1 and before startup from Refueling Outage 15 for Unit 2.

Amendment Nos.: 194 & 190.

Facility Operating License Nos. DPR–29 and DPR–30: The amendments revised the Technical Specifications.

Date of initial notice in ***Federal Register:*** December 15, 1999 (64 FR 70082).

The Commission's related evaluation of the amendments is contained in a Safety Evaluation dated January 28, 2000.

No significant hazards consideration comments received: No.

Consolidated Edison Company of New York, Docket No. 50–247, Indian Point Nuclear Generating Unit No. 2, Westchester County, New York

Date of application for amendment: June 2, 1999, as supplemented August 25, 1999.

Brief description of amendment: The amendment allows for the relocation of the Quality Assurance related administrative controls to the Quality Assurance Program Description in accordance with NRC Administrative Letter 95–06, ''Relocation of Technical Specification Administrative Controls Related to Quality Assurance.''

Date of issuance: February 25, 2000.

Effective date: As of the date of issuance to be implemented within 30 days.

Amendment No.: 206.

Facility Operating License No. DPR–26: Amendment revised the Technical Specifications.

Date of initial notice in ***Federal Register:*** November 3, 1999 (64 FR 59799).

The August 25, 1999, letter provided clarifying information that did not change the initial proposed no significant hazards consideration.

The Commission's related evaluation of the amendment is contained in a Safety Evaluation dated February 25, 2000.

No significant hazards consideration comments received: No.

Consolidated Edison Company of New York, Docket No. 50–247, Indian Point Nuclear Generating Unit No. 2, Westchester County, New York

Date of application for amendment: February 29, 2000.

Brief description of amendment: The amendment revises Technical Specification (TS) 3.7.D.1 to correct an editorial error, TS 6.2.2 to change the senior reactor operator license requirement for the Operations Manager, and TS 6.3.1 to modify the qualification requirement for the Operations Manager.

Date of issuance: February 29, 2000.

Effective date: As of the date of issuance to be implemented within 30 days.

Amendment No.: 207.

Facility Operating License No. DPR–26: Amendment revised the Technical Specifications.

Date of initial notice in ***Federal Register:*** April 7, 1999 (64 FR 17023).

The Commission's related evaluation of the amendment is contained in a Safety Evaluation dated February 29, 2000.

No significant hazards consideration comments received: No.

Duke Energy Corporation, et al., Docket Nos. 50–413 and 50–414, Catawba Nuclear Station, Units 1 and 2, York County, South Carolina

Date of application for amendments: June 24, 1999, as supplemented by letter dated November 24, 1999.

Brief description of amendments: The amendments revised the Technical Specifications by revising the minimum reactor coolant system (RCS) flow rate limit, the reactor coolant average temperature, and the pressurizer pressure limits, and by restricting operation to a RCS flow deficit of no more than one percent.

Date of issuance: March 1, 2000.

Effective date: As of the date of issuance and shall be implemented within 30 days from the date of issuance.

Amendment Nos.: Unit 1—184; Unit 2—176.

Facility Operating License Nos. NPF–35 and NPF–52: Amendments revised the Technical Specifications.

Date of initial notice in ***Federal Register:*** August 11, 1999 (64 FR 43770).

The November 24,1999, letter provided clarifying information that did not change the scope of the June 24, 1999, application and the initial proposed no significant hazards consideration determination.

The Commission's related evaluation of the amendments is contained in a Safety Evaluation dated March 1, 2000.

No significant hazards consideration comments received: No

Duke Energy Corporation, Docket Nos. 50–369 and 50–370, McGuire Nuclear Station, Units 1 and 2, Mecklenburg County, North Carolina

Date of application for amendments: June 24, 1999, as supplemented by letter dated November 24, 1999.

Brief description of amendments: The amendments revise the minimum reactor coolant system (RCS) flow rate limit, reduce the reactor coolant average temperature and pressurizer pressure limits, restrict operation to a RCS flow deficit of no more than one percent, and change the low RCS flow reactor trip setpoint.

Date of issuance: March 2, 2000.

Effective date: As of the date of issuance and shall be implemented within 30 days from the date of issuance.

Amendment Nos.: Unit 1—191; Unit 2—172.

Facility Operating License Nos. NPF–9 and NPF–17: Amendments revised the Technical Specifications.

Date of initial notice in ***Federal Register:*** August 11, 1999 (64 FR 43772).

The November 24, 1999, supplemental letter did not expand the scope of the application initially noticed or change the proposed no significant hazards consideration determination.

The Commission's related evaluation of the amendments is contained in a Safety Evaluation dated March 2, 2000.

No significant hazards consideration comments received: No.

Energy Northwest, Docket No. 50–397, WNP–2, Benton County, Washington

Date of application for amendment: October 13, 1999.

Brief description of amendment: The amendment removes footnote (d) from Function 5, ''RHR [residual heat removal] SDC [shut down cooling] System Isolation'' of Technical Specification (TS) Table 3.3.6.1–1, ''Primary Containment Isolation Instrumentation.'' Footnote (d) states, ''Only the inboard trip system is required in Modes 1, 2, and 3, as applicable, when the outboard valve control is transferred to the alternate remote shutdown panel and the outboard valve is closed.'' The outboard suction trip system valve, RHR–V–8, is no longer transferred to the alternate remote shutdown panel and is now required during Modes 1, 2 and 3. Therefore, footnote (d) is no longer needed. Footnote (e) is relettered as footnote (d) for consistency.

Date of issuance: March 9, 2000.

Effective date: March 9, 2000, to be implemented within 30 days of issuance.

Amendment No.: 161.

Facility Operating License No. NPF–21: The amendment revised the Technical Specifications.

Date of initial notice in ***Federal Register:*** December 15, 1999 (64 FR 70082).

The Commission's related evaluation of the amendment is contained in a Safety Evaluation dated March 9, 2000.

No significant hazards consideration comments received: No.

Entergy Gulf States, Inc., and Entergy Operations, Inc., Docket No. 50–458, River Bend Station, Unit 1, West Feliciana Parish, Louisiana

Date of amendment request: December 16, 1999.

Brief description of amendment: The amendment authorizes the licensee to revise fuel handling accident (FHA) dose calculations for three scenarios described in the River Bend Station, Unit 1, Updated Safety Analysis Report. The first is an FHA in the fuel building, assumed to occur 24 hours post-shutdown. A second FHA analysis was prepared to support Amendment 35 to RBS Technical Specifications (TS) which assumed an FHA occurs in the primary containment 80 hours post-shutdown during local leakage rate testing (LLRT). A third analysis was prepared in support of Amendment 85 to the River Bend Station Technical Specifications which assumed the containment is open at 11 days. These analyses are being updated to account for several changes that were determined by the licensee to involve an unreviewed safety question in accordance with Title 10 of the *Code of Federal Regulations,* Section 50.59(a)(2)(i).

Date of issuance: March 2, 2000.

Effective date: The license amendment is effective as of its date of issuance and shall be implemented in the next periodic update to the USAR in accordance with 10 CFR 50.71(e). Implementation of the amendment is the incorporation into the USAR update, the changes to the description of the facility as described in the licensee's application dated December 16, 1999, and evaluated in the staff's Safety Evaluation attached to this amendment.

Amendment No.: 110.

Facility Operating License No. NPF–47: The amendment authorized changes to the Updated Safety Analysis Report.

Date of initial notice in ***Federal Register:*** January 26, 2000 (65 FR 4272).

The Commission's related evaluation of the amendment is contained in a Safety Evaluation dated March 2, 2000.

No significant hazards consideration comments received: No.

Entergy Operations, Inc., Docket Nos. 50–313 and 50–368, Arkansas Nuclear One, Units 1 and 2, Pope County, Arkansas

Date of amendment request: September 17, 1999.

Brief description of amendments: The amendments modify TS 3.25.2, ''Radioactive Gas Storage Tanks,'' at Arkansas Nuclear One, Unit 1 (ANO–1) and TS 3/4.11.2, ''Gas Storage Tanks,'' at Arkansas Nuclear One, Unit 2 (ANO–2). This change will reduce the limiting condition for operation for the maximum quantity of stored radioactivity per tank from 300,000 curies of noble gases as Xenon–133 (Xe–133) equivalent to 78,782 curies of noble gases as Xe–133 equivalent at ANO–1, and 82,400 curies of noble gases as Xe–133 equivalent at ANO–2.

Date of issuance: February 18, 2000.

Effective date: As of the date of issuance and shall be implemented within 30 days from the date of issuance.

Amendment Nos.: ANO–1—204; ANO–2—211.

Facility Operating License Nos. DPR–51 and NPF–6: Amendments revised the Technical Specifications.

Date of initial notice in ***Federal Register:*** January 12, 2000 (65 FR 1921).

The Commission's related evaluation of the amendments is contained in a Safety Evaluation dated February 18, 2000.

No significant hazards consideration comments received: No.

Entergy Operations, Inc., Docket No. 50–382, Waterford Steam Electric Station, Unit 3, St. Charles Parish, Louisiana

Date of amendment request: July 29, 1998, as supplemented by letters dated July 29, October 28, and November 11, 1999

Brief description of amendment: The amendment replaces the existing reference to the Asea Brown Boveri-Combustion Engineering, Inc. small break loss-of-coolant accident emergency core cooling system performance evaluation model with the revised model described in the topical report CENPD–137, Supplement 2, P–A, April 1998.

Date of issuance: March 7, 2000.

Effective date: As of the date of issuance and shall be implemented within 60 days from the date of issuance.

Amendment No.: 158.

Facility Operating License No. NPF–38: The amendment revised the Technical Specifications.

Date of initial notice in ***Federal Register:*** December 15, 1999 (64 FR 70085).

The July 29, October 28, and November 11, 1999, letters provided additional information that did not change the scope of the initial proposed no significant hazards consideration determination.

The Commission's related evaluation of the amendment is contained in a Safety Evaluation dated March 7, 2000.

No significant hazards consideration comments received: No.

FirstEnergy Nuclear Operating Company, et al., Docket No. 50–412, Beaver Valley Power Station, Unit No. 2, Shippingport, Pennsylvania

Date of application for amendments: March 16, 1999.

Brief description of amendments: This amendment revised TS 3/4.7.1.3 and associated Bases for the Primary Plant Demineralized Water (PPDW) system to clarify that the minimum specified volume of water in the PPDW Storage Tank is a usable volume. Additionally, the minimum usable volume of water in the PPDW Storage Tank is increased, and a clarifying footnote that the specified value is an analysis value is added. Finally, several editorial and administrative changes, such as revision of action statement wording, addition of license number to TS page, and addition of clarifying information to the TS Bases regarding analysis assumptions are made.

Date of issuance: February 28, 2000.

Effective date: As of the date of issuance and shall be implemented within 60 days.

Amendment Nos.: 106.

Facility Operating License No. NPF–73: Amendment revised the Technical Specifications.

Date of initial notice in ***Federal Register:*** April 21, 1999, (64 FR 19556).

The Commission's related evaluation of the amendments is contained in a Safety Evaluation dated February 28, 2000.

No significant hazards consideration comments received: No.

FirstEnergy Nuclear Operating Company, et al., Docket Nos. 50–334 and 50–412, Beaver Valley Power Station, Unit Nos. 1 and 2, Shippingport, Pennsylvania

Date of application for amendments: May 27, 1999.

Brief description of amendments: The amendments relocate the seismic monitoring instrumentation requirements contained in Technical Specification (TS) 3/4.3.3.3 to the Licensing Requirements Manual (LRM) based on the guidance provided in Generic Letter 95–10, ''Relocation of Selected Technical Specifications Requirements Related to Instrumentation.'' The Bases section for Specification 3/4.3.3.3 is also relocated to the LRM. The appropriate Index pages, Table Index page (Unit No. 1 only), TS pages and Bases pages are revised to reflect the removal of the seismic monitoring instrumentation specification from the TSs. An additional TS page is added to reflect that TS Number 3/4.3.3.4 is not used.

This additional page also denotes the number of the following page. Finally, the Bases section is modified to denote that TS Number 3/4.3.3.4 is not used.

Date of issuance: February 28, 2000.

Effective date: As of date of issuance and shall be implemented within 60 days.

Amendment Nos.: 228 and 107.

Facility Operating License Nos. DPR–66 and NPF–73: Amendments revised the Technical Specifications.

Date of initial notice in ***Federal Register:*** June 30, 1999 (64 FR 35203).

The Commission's related evaluation of the amendments is contained in a Safety Evaluation dated February 28, 2000.

No significant hazards consideration comments received: No.

FirstEnergy Nuclear Operating Company, et al., Docket Nos. 50–334 and 50–412, Beaver Valley Power Station, Unit Nos. 1 and 2, Shippingport, Pennsylvania

Date of application for amendments: May 27, 1999.

Brief description of amendments: The amendments (1) revised the frequency for performing the CHANNEL FUNCTIONAL TEST of the manual initiation functional units specified in the Beaver Valley Power Station, Unit Nos. 1 and 2, Engineered Safety Features Actuation System (ESFAS) Instrumentation Technical Specifications (TSs) from monthly, with an accompanying footnote which allows the manual initiation to be tested on a refueling interval, to each refueling interval; (2) revise footnotes associated with TS ESFAS tables; (3) revise associated TS Bases.

Date of issuance: February 28, 2000.

Effective date: As of date of issuance and shall be implemented within 60 days.

Amendment Nos.: 229 and 108.

Facility Operating License Nos. DPR–66 and NPF–73: Amendments revised the Technical Specifications.

Date of initial notice in ***Federal Register:*** June 30, 1999 (64 FR 35205).

The Commission's related evaluation of the amendments is contained in a Safety Evaluation dated February 28, 2000.

No significant hazards consideration comments received: No.

FirstEnergy Nuclear Operating Company, Docket No. 50–346, Davis-Besse Nuclear Power Station, Unit 1, Ottawa County, Ohio

Date of application for amendment: May 21, 1999, as supplemented by submittals dated December 1, 1999, and January 28, 2000.

Brief description of amendment: This amendment revises the Technical Specifications to expand the present spent fuel storage capability by 289 storage locations by allowing the use of spent fuel racks in the cask pit area adjacent to the spent fuel pool.

Date of issuance: February 29, 2000.

Effective date: February 29, 2000.

Amendment No.: 237.

Facility Operating License No. NPF–3: Amendment revised the Technical Specifications.

Date of initial notice in ***Federal Register:*** July 8, 1999 (64 FR 36933).

The supplemental information contained clarifying information and did not change the initial no significant hazards consideration determination and did not expand the scope of the original **Federal Register** notice.

The Commission's related evaluation of the amendment is contained in a Safety Evaluation dated February 29, 2000.

No significant hazards consideration comments received: No.

Florida Power and Light Company, et al., Docket No. 50–389, St. Lucie Plant, Unit No. 2, St. Lucie County, Florida

Date of application for amendment: August 18, 1999.

Brief description of amendment: This amendment decreases the surveillance frequency, listed in the updated Final Safety Analysis Report (UFSAR), for cycling steam valves in the turbine overspeed protection system from monthly to quarterly.

Date of Issuance: February 28, 2000.

Effective Date: As of the date of its issuance, to be incorporated into the UFSAR at the time of its next update.

Amendment No.: 108.

Facility Operating License No. NPF–16: Amendment revised the UFSAR.

Date of initial notice in ***Federal Register:*** September 22, 1999 (64 FR 51345).

The Commission's related evaluation of the amendment is contained in a Safety Evaluation dated February 28, 2000.

No significant hazards consideration comments received: No.

Florida Power and Light Company, Docket Nos. 50–250 and 50–251, Turkey Point Plant, Units 3 and 4, Dade County, Florida

Date of application for amendments: December 1, 1999, as supplemented December 15, 1999.

Breif description of amendments: The amendments revised License Condition 3.L for Turkey Point, Units 3 and 4, Operating Licenses DPR–31 and DPR–41 to reflect the December 1, 1999, date of the last revision to the Physical Security Plan. Also, the phrase ''Turkey Point Plant, Units 3 and 4 Security Plan'' was revised to ''Turkey Point Physical Security Plan.''

Date of issuance: February 28, 2000.

Effective date: February 28, 2000.

Amendment Nos.: 204 and 198.

Facility Operating License Nos. DPR–31 and DPR–41: Amendments revised the Operating Licenses.

Date of initial notice in ***Federal Register:*** December 29, 1999 (64 FR 73092).

The Commssion's related evaluation of the amendments is contained in a Safety Evaluation dated February 28, 2000.

No significant hazards consideration comments received: No.

Florida Power Corporation, et al., Docket No. 50–302, Crystal River Unit No. 3 Nuclear Generating Plant, Citrus County, Florida

Date of application for amendment: October 12, 1999.

Brief description of amendment: The amendment revises the Technical Specifications, Appendix B, ''Environmental Protection Plan (Non-Radiological)'' to incorporate the reasonable and prudent measures, and the terms and conditions, of the Incidental Take Statement in the Biological Opinion issued by the National Marine Fisheries Service.

Date of issuance: February 29, 2000.

Effective date: February 29, 2000.

Amendment No.: 190.

Facility Operating License No. DPR–31: Amendment revised the Technical Specifications.

Date of initial notice in ***Federal Register:*** December 15, 1999 (64 FR 70090).

The Commission's related evaluation of the amendment is contained in a Safety Evaluation dated February 29, 2000.

No significant hazards consideration comments received: No.

Indiana Michigan Power Company, Docket Nos. 50–315 and 50–316, Donald C. Cook Nuclear Plant, Units 1 and 2, Berrien County, Michigan

Date of application for amendments: December 22, 1999.

Brief description of amendments: The amendments delete Technical Specification 5.4.2, ''Reactor Coolant System Volume,'' regarding the reactor coolant system (RCS) volume information. Information concerning the RCS volume is included in the D. C. Cook Updated Final Safety Analyses Report (UFSAR), and any changes to the information are controlled in accordance with 10 CFR 50.59.

Date of issuance: March 1, 2000.

Effective date: As of the date of issuance and shall be implemented within 30 days.

Amendment Nos.: 241 and 222.

Facility Operating License Nos. DPR–58 and DPR–74: Amendments revised the Technical Specifications.

Date of initial notice in ***Federal Register:*** January 13, 2000 (65 FR 2199).

The Commssion's related evaluation of the amendments is contained in a Safety Evaluation dated March 1, 2000.

No significant hazards consideration comments received: No.

Nebraska Public Power District, Docket No. 50–298, Cooper Nuclear Station, Nemaha County, Nebraska

Date of amendment request: October 6, 1999, as supplemented February 9, 2000.

Brief description of amendment: The amendment addresses the following changes to the Technical Specifications: (1) provisions for implementation of 10 CFR Part 50, Appendix J, Option B, (Technical Specification Task Force (TSTF) Change 52, Revision 2) (2) extension of the required surveillance interval for the containment air lock interlock mechanism from 18 to 24 months (TSTF Change 17, Revision 1), (3) clarification of the valve types requiring isolation time testing (TSTF Change 46, Revision 1), and (4) provisions for use of administrative means for verification of isolation devices that are locked, sealed or otherwise secured (TSTF Change 269, Revision 2).

Date of issuance: March 3, 2000.

Effective date: March 3, 2000, to be implemented within 30 days.

Amendment No.: 180.

Facility Operating License No. DPR–46: Amendment revised the Technical Specifications.

Date of initial notice in ***Federal Register:*** December 29, 1999 (64 FR 73092). The February 9, 2000, supplement provided clarifying information that was within the scope of the October 6, 1999, application and the staff's original **Federal Register** notice and did not change the staff's initial proposed no significant hazards consideration determination.

The Commssion's related evaluation of the amendment is contained in a Safety Evaluation dated March 3, 2000.

No significant hazards consideration comments received: No.

Niagara Mohawk Power Corporation, Docket No. 50–220, Nine Mile Point Nuclear Station, Unit 1, Oswego County, New York

Date of application for amendment: August 26, 1999, as supplemented December 17, 1999.

Brief description of amendment: The amendment changes Technical Specification 3.2.3, ''Coolant Chemistry,'' to support the implementation of noble metal chemical addition.

Date of issuance: March 8, 2000.

Effective date: As of the date of issuance to be implemented before the licensee first performs the noble metal chemical addition.

Amendment No.: 169.

Facility Operating License No. NPF–69: Amendment revises the Technical Specifications.

Date of initial notice in ***Federal Register:*** September 22, 1999 (64 FR 51347).

The licensee's supplemental letter dated December 17, 1999, did not change the Commission's finding of no significant hazards consideration.

The Commssion's related evaluation of the amendment is contained in a Safety Evaluation dated March 8, 2000.

No significant hazards consideration comments received: No.

Niagara Mohawk Power Corporation, Docket No. 50–410, Nine Mile Point Nuclear Station, Unit 2, Oswego County, New York

Date of application for amendment: October 25, 1999, as supplemented on February 2 and 7, 2000.

Brief description of amendment: The amended Technical Specifications permit use of the already-installed Oscillation Power Range Monitor system.

Date of issuance: March 2, 2000.

Effective date: As of the date of issuance to be implemented before activation of the Oscillation Power Range Monitor System, but no later than August 31, 2000.

Amendment No.: 92.

Facility Operating License No. NPF–69: Amendment revises the Technical Specifications.

Date of initial notice in ***Federal Register:*** December 1, 1999 (64 FR 67336).

The February 2 and 7, 2000, letters provided clarifying information that did not change the initial proposed no significant hazards consideration.

The Commission's related evaluation of the amendment is contained in a Safety Evaluation dated March 2, 2000.

No significant hazards consideration comments received: No.

Northeast Nuclear Energy Company, et al., Docket No. 50–245, Millstone Nuclear Power Station, Unit No. 1, New London County, Connecticut

Date of application for amendments: April 19, 1999, as supplemented August 25, October 14, November 3, December 20, 1999, and February 29, 2000.

Brief description of amendments: The amendment replaces the current Technical Specifications for fuel storage pool water lever, crane operability, and crane travel with a spent fuel cask with new Technical Specifications to reflect the permanently defueled status of the plant.

Date of Issuance: March 7, 2000.

Effective date: As of the date of issuance and shall be implemented within 90 days from the date of issuance.

Amendment No.: 107.

Facility Operating License No. DPR–21: The amendment revised the Technical Specifications.

Date of initial notice in ***Federal Register:*** June 30, 1999, (64 FR 35208).

The August 25, October 14, November 3, December 20, 1999, and February 29, 2000, letters provided clarifying information that did not change the scope of the original application and proposed no hazards consideration determination.

The Commission's related evaluation of the amendment is contained in a Safety Evaluation dated March 7, 2000.

No significant hazards consideration comments received: No.

Northeast Nuclear Energy Company, et al., Docket Nos. 50–336 and 50–423, Millstone Nuclear Power Station, Unit Nos. 2 and 3, New London County, Connecticut

Date of application for amendment: November 23, 1999.

Brief description of amendment: The amendment changes Technical Specification (TS) 4.0.5, ''Limiting Conditions for Operation and Surveillance Requirements'' by adding a biennial or 2-year surveillance interval and incorporating a required frequency for performing inservice testing activities of once per 731 days.

Date of issuance: March 8, 2000.

Effective date: As of the date of issuance, and shall be implemented within 60 days.

Amendment Nos.: 241 and 178.

Facility Operating License Nos. DPR–65 and NPF–49: Amendment revised the Technical Specifications.

Date of initial notice in ***Federal Register:*** January 26, 2000 (65 FR 4286).

The Commission's related evaluation of the amendment is contained in a Safety Evaluation dated March 8, 2000.

No significant hazards consideration comments received: No.

Northern States Power Company, Docket Nos. 50–282 and 50–306, Prairie Island Nuclear Generating Plant, Units 1 and 2, Goodhue County, Minnesota

Date of application for amendments: March 2, 1998, supplemented on January 21, 2000.

Brief description of amendments: The amendments change the second paragraph of Technical Specification 3.8.D, ''Spent Fuel Pool Special Ventilation System,'' to clarify restrictions on movement of loads in the spent fuel pool enclosure with one train of spent fuel pool special ventilation system inoperable.

Date of issuance: February 17, 2000.

Effective date: As of the date of issuance and shall be implemented within 30 days.

Amendment Nos.: 147 and 138.

Facility Operating License Nos. DPR–42 and DPR–60: Amendments revised the Technical Specifications.

Date of initial notice in ***Federal Register:*** May 20, 1998 (63 FR 27763).

The Commission's related evaluation of the amendments is contained in a Safety Evaluation dated February 17, 2000.

No significant hazards consideration comments received: No.

Northern States Power Company, Docket Nos. 50–282 and 50–306, Prairie Island Nuclear Generating Plant, Units 1 and 2, Goodhue County, Minnesota

Date of application for amendments: November 6, 1996, supplemented April 10 and October 1, 1997, and March 4, 1998.

Brief description of amendments: The amendments revise Technical Specification Section 5.0, ''DESIGN FEATURES,'' by relocating certain portions of the design features information to the Updated Safety Analysis Report, consistent with NUREG–1431, ''Standard Technical Specifications, Westinghouse Plants,'' Revision 1.

Date of issuance: February 29, 2000.

Effective date: As of the date of issuance and shall be implemented within 30 days.

Amendment Nos.: 148 and 139.

Facility Operating License Nos. DPR–42 and DPR–60: Amendments revised the Technical Specifications.

Date of initial notice in ***Federal Register:*** January 29, 1997 (62 FR 4338).

The Commission's related evaluation of the amendments is contained in a Safety Evaluation dated February 29, 2000.

No significant hazards consideration comments received: No.

Public Service Electric & Gas Company, Docket No. 50–354, Hope Creek Generating Station, Salem County, New Jersey

Date of application for amendment: August 26, 1999.

Brief description of amendment: This amendment raises the condensate storage tank (CST) low level setpoint and the corresponding allowable value in Technical Specification Tables 3.3.3–2 and 3.3.5–2. The subject setpoint is associated with the automatic transfer of the High Pressure Coolant Injection (HPCI) and Reactor Core Isolation Cooling (RCIC) pump suctions from the CST to the suppression pool in the event of low CST level. These changes are being made to address concerns regarding potential vortexing in the HPCI and RCIC suction flowpaths.

Date of issuance: March 6, 2000.

Effective date: As of the date of issuance, and shall be implemented within 60 days.

Amendment No.: 124.

Facility Operating License No. NPF–57: This amendment revised the Technical Specifications.

Date of initial notice in ***Federal Register:*** September 22, 1999 (64 FR 51348).

The Commission's related evaluation of the amendment is contained in a Safety Evaluation dated March 6, 2000.

No significant hazards consideration comments received: No.

Public Service Electric & Gas Company, Docket Nos. 50–272 and 50–311, Salem Nuclear Generating Station, Unit Nos. 1 and 2, Salem County, New Jersey

Date of application for amendments: July 29, 1999, as supplemented November 30, 1999.

Brief description of amendments: The amendments revise Technical Specifications Surveillance Requirement 4.6.1.1 to clarify when verification of primary containment integrity may be performed by administrative means and to change the surveillance interval for verification of manual valves and blind flanges inside of containment.

Date of issuance: February 29, 2000.

Effective date: As of the date of issuance, and shall be implemented within 60 days.

Amendment Nos.: 227 and 208.

Facility Operating License Nos. DPR–70 and DPR–75: The amendments revised the Technical Specifications.

Date of initial notice in ***Federal Register:*** September 22, 1999 (64 FR 51349).

The November 30, 1999, letter provided clarifying information that did not change the staff's initial proposed no significant hazards consideration determination.

The Commission's related evaluation of the amendments is contained in a Safety Evaluation dated February 29, 2000.

No significant hazards consideration comments received: No.

Southern California Edison Company, et al., Docket Nos. 50–361 and 50–362, San Onofre Nuclear Generating Station, Units 2 and 3, San Diego County, California

Date of application for amendments: April 11, 1996 (PCN 460), as supplemented April 6, 1998, and March 22 and July 29, 1999.

Brief description of amendments: The amendments revise Technical Specification 3.6.3, ''Containment Isolation Valves,'' to specify that the completion time for required action for certain containment isolation valves be in accordance with the applicable limiting condition for operation pertaining to the engineered safety features system in which they are installed.

Date of issuance: March 9, 2000.

Effective date: March 9, 2000, to be implemented within 30 days of issuance.

Amendment Nos.: Unit 2–165; Unit 3–156.

Facility Operating License Nos. NPF–10 and NPF–15: The amendments revised the Technical Specifications.

Date of initial notice in ***Federal Register:*** January 19, 2000 (65 FR 2993), as corrected January 26, 2000 (65 FR 4265).

The Commission's related evaluation of the amendments is contained in a Safety Evaluation dated March 9, 2000.

No significant hazards consideration comments received: No.

Southern California Edison Company, et al., Docket Nos. 50–361 and 50–362, San Onofre Nuclear Generating Station, Units 2 and 3, San Diego County, California

Date of application for amendments: December 13, 1999, as supplemented February 24, 2000 (PCN–507).

Brief description of amendments: The amendments revise the license expiration dates for San Onofre Unit 2 to February 16, 2022, and for San Onofre Unit 3 to November 15, 2022, thus extending the units' periods of operation to the full 40-year design-basis lifetime.

Date of issuance: March 9, 2000.

Effective date: March 9, 2000, to be implemented within 30 days of issuance.

Amendment Nos.: Unit 2—166; Unit 3—157.

Facility Operating License Nos. NPF–10 and NPF–15: The amendments revised the Operating Licenses.

Date of initial notice in ***Federal Register:*** December 29, 1999 (64 FR 73098).

The Commission's related evaluation of the amendments is contained in a Safety Evaluation dated March 9, 2000.

No significant hazards consideration comments received: No

STP Nuclear Operating Company, Docket Nos. 50–498 and 50–499, South Texas Project, Units 1 and 2, Matagorda County, Texas

Date of amendment request: September 30, 1998, as supplemented May 14 and October 21, 1999.

Brief description of amendments: The amendments revise the South Texas Project, Units 1 and 2, offsite dose licensing bases to account for (1) operation of the existing steam generators at reduced feedwater inlet temperatures and (2) operation with the new replacement steam generators, also at a reduced feedwater temperature. The changes revised calculated offsite doses for four existing Updated Final Safety Analysis Report (UFSAR) Chapter 15 accidents and added a discussion in Chapter 15 of the radiological analysis for the voltage-based criteria for steam generator tubes.

Date of issuance: March 2, 2000.

Effective date: March 2, 2000, to be implemented within 30 days.

Amendment Nos.: Unit 1—124; Unit 2—112

Facility Operating License Nos. NPF–76 and NPF–80: Amendments authorize revisions to the UFSAR.

Date of initial notice in ***Federal Register:*** November 18, 1998 (63 FR 64124).

The May 14 and October 21, 1999, supplemental letters provided clarifying information that was within the scope of the original **Federal Register** notice and did not change the staff's initial proposed no significant hazards consideration determination.

The Commission's related evaluation of the amendments is contained in a Safety Evaluation dated March 2, 2000.

No significant hazards consideration comments received: No.

Tennessee Valley Authority, Docket Nos. 50–327 and 50–328, Sequoyah Nuclear Plant, Units 1 and 2, Hamilton County, Tennessee

Date of application for amendments: August 30, 1999, as supplemented January 13, 2000.

Brief description of amendments: The amendments revise the Technical Specifications (TS) to delete the necessity for time response testing various instrument transmitters based on historical records indicating satisfactory time responses in the past.

Date of issuance: February 29, 2000.

Effective date: February 29, 2000.

Amendment Nos.: Unit 1—251; Unit 2—242.

Facility Operating License Nos. DPR–77 and DPR–79: Amendments revise the TS.

Date of initial notice in ***Federal Register:*** October 6, 1999 (64 FR 54381). The supplemental letter of January 13, 2000, did not expand the scope of the initial amendment request or change the NRC staff's initial proposed no significant hazards consideration determination.

The Commission's related evaluation of the amendment is contained in a Safety Evaluation dated February 29, 2000.

No significant hazards consideration comments received: No

Tennessee Valley Authority, Docket Nos. 50–327 and 50–328, Sequoyah Nuclear Plant, Units 1 and 2, Hamilton County, Tennessee

Date of application for amendments: October 14, 1999 as supplemented February 23 and March 2, 2000.

Brief description of amendments: Revise Section 4.4 of the Technical Specification (TS) surveillance testing requirements and their associated Bases to incorporate an alternate repair criteria for axial primary water stress corrosion cracking at dented tube support plate intersections.

Date of issuance: March 8, 2000.

Effective date: March 8, 2000.

Amendment Nos.: Unit 1—252; Unit 2—243.

Facility Operating License Nos. DPR–77 and DPR–79: Amendments revise the TS.

Date of initial notice in ***Federal Register:*** December 29, 1999 (64 FR 73100). The supplemental letters dated February 23, and March 2, 2000, did not expand the scope of the original amendment request or change the initial proposed no significant hazards consideration determination.

The Commission's related evaluation of the amendment is contained in a Safety Evaluation dated March 8, 2000.

No significant hazards consideration comments received: No.

Tennessee Valley Authority, Docket No. 50–390 Watts Bar Nuclear Plant, Unit 1, Rhea County, Tennessee

Date of application for amendment: June 25, 1999, as supplemented December 17, 1999.

Brief description of amendment: The amendment revises the main steam safety valve Technical Specification (TS) Section 3.7.1 to provide a new requirement to reduce the power range neutron flux-high reactor trip setpoints when two or more main steam safety valves (MSSVs) per steam generator are inoperable.

Date of issuance: March 7, 2000.

Effective date: March 7, 2000.

Amendment No.: 19.

Facility Operating License No. NPF–90: Amendment revises the TSs.

Date of initial notice in ***Federal Register:*** August 11, 1999 (64 FR 43781). The letter dated December 17, 1999 provided clarifying information that did not change the initial proposed no significant hazards consideration determination.

The Commission's related evaluation of the amendment is contained in a Safety Evaluation dated March 7, 2000.

No significant hazards consideration comments received: No

TXU Electric, Docket Nos. 50–445 and 50–446, Comanche Peak Steam Electric Station, Unit Nos. 1 and 2, Somervell County, Texas

Date of amendment request: February 11, 1999, as supplemented by letters dated September 3 and December 20, 1999.

Brief description of amendments: The amendments change the Technical Specifications to authorize an increase in the allowable spent fuel storage capacity and the crediting of soluble boron, in the spent fuel pool, for spent fuel reactivity control.

Date of issuance: February 24, 2000.

Effective date: As of the date of issuance and shall be implemented within 30 days from the date of issuance.

Amendment Nos.: 74.

Facility Operating License Nos. NPF–87 and NPF–89: The amendments revised the Technical Specifications.

Date of initial notice in ***Federal Register:*** May 12, 1999 (64 FR 25522).

The Commission's related evaluation of the amendments is contained in a Safety Evaluation dated February 24, 2000.

No significant hazards consideration comments received: No.

Vermont Yankee Nuclear Power Corporation, Docket No. 50–271, Vermont Yankee Nuclear Power Station, Vernon, Vermont

Date of application for amendment: January 20, 2000.

Brief description of amendment: The amendment redefines the functional testing criteria for the noble gas activity

monitor instrumentation in the Augmented Off-Gas system.

Date of Issuance: March 6, 2000.

Effective date: As of its date of issuance, and shall be implemented within 30 days.

Amendment No.: 184.

Facility Operating License No. DPR–28: Amendment revised the Technical Specifications.

Date of initial notice in ***Federal Register:*** February 2, 2000 (65 FR 4999).

The Commission's related evaluation of this amendment is contained in a Safety Evaluation dated March 6, 2000.

No significant hazards consideration comments received: No.

Vermont Yankee Nuclear Power Corporation, Docket No. 50–271, Vermont Yankee Nuclear Power Station, Vernon, Vermont

Date of application for amendment: February 11, 2000.

Brief description of amendment: The amendment deletes the requirement to exercise the main steam isolation valves (MSIVs) twice weekly by partial closure and subsequent re-opening. Testing of the MSIVs to demonstrate their safety function will continue to be performed on a quarterly basis in accordance with the Vermont Yankee Inservice Testing program, Technical Specifications (TSs), and applicable provisions of Section XI of the ASME Boiler and Pressure Vessel Code. The TS change is issued as a follow-up amendment to NOED 00–06–01, which was orally granted on February 10, 2000.

Date of Issuance: March 9, 2000

Effective date: As of the date of issuance, and shall be implemented prior to March 25, 2000.

Amendment No.: 185

Facility Operating License No. DPR–28: Amendment revised the Technical Specifications.

Public comments requested as to proposed no significant hazards considerations: Yes (65 FR 8749) February 22, 2000. That notice provided an opportunity to submit comments on the Commission's proposed no significant hazards consideration determination. No comments have been received. The notice also provided for an opportunity to request a hearing by March 23, 2000, but indicated that if the Commission makes a final no significant hazards consideration determination any such hearing would take place after issuance of the amendment.

The Commission's related evaluation of the amendment is contained in a Safety Evaluation dated March 9, 2000.

No significant hazards consideration comments received: No

Virginia Electric and Power Company, et al., Docket Nos. 50–338 and 50–339, North Anna Power Station, Units No. 1 and No. 2, Louisa County, Virginia

Date of application for amendments: May 6, 1999, as supplemented June 22 and December 16, 1999.

Brief description of amendments: The amendments revise the Technical Specifications Sections 3.3.1.1; 4.3.1.1.1; 4.3.1.1.2; 4.3.1.1.3; 3.3.2.1; 4.3.2.1.1; 4.3.2.1.2; 4.3.2.1.3; 3/4.3.1; 3/4.3.2 and 6.8.4.9 and Tables 3.3–1; 4.3–1; 3.3–3 and 4.3–2 for Unit 1, and Sections 3.3.1.1; 4.3.1.1.1; 4.3.1.1.2; 4.3.1.1.3; 3.3.2.1; 4.3.2.1.1; 4.3.2.1.2; 4.3.2.1.3; 3/4.3.1; 3/4.3.2 and 6.8.4.9 and Tables 3.3–1; 4.3–1; 3.3–3 and 4.3–2 for Unit 2, to revise the surveillance frequency for the Reactor Trip System (RTS) and the Engineered Safety Features Actuation System (ESFAS) analog instrumentation channels. In addition, the allowed outage time and action times for the RTS and ESFAS analog instrumentation and the actuation logic are being modified.

Date of issuance: March 9, 2000

Effective date: As of the date of issuance and shall be implemented within 90 days from the date of issuance.

Amendment Nos.: 221 and 202.

Facility Operating License Nos. NPF–4 and NPF–7. Amendments revised the Technical Specifications.

Date of initial notice in ***Federal Register:*** June 16, 1999 (64 FR 32291). The letters of June 22 and December 16, 1999, contained clarifying information only, and did not change the initial no significant hazards consideration determination.

The Commission's related evaluation of the amendments is contained in a Safety Evaluation dated March 9, 2000.

No significant hazards consideration comments received: No.

Wolf Creek Nuclear Operating Corporation, Docket No. 50–482, Wolf Creek Generating Station, Coffey County, Kansas

Date of amendment request: December 15, 1999.

Brief description of amendment: The amendment modified the improved technical specifications (ITS) that were issued in Amendment No. 123 on March 31, 1999, and implemented on December 18, 1999. The changes expand the region of acceptable reactor coolant pump (RCP) seal injection flow to each RCP in Figure 3.5.5–1 and provides 10 editorial changes to the ITS.

Date of issuance: March 1, 2000.

Effective date: March 1, 2000, to be implemented within 60 days of the date of issuance.

Amendment No.: 132.

Facility Operating License No. NPF–42. The amendment revised the Technical Specifications.

Date of initial notice in ***Federal Register:*** January 26, 2000 (65 FR 4292).

The Commission's related evaluation of the amendment is contained in a Safety Evaluation dated March 1, 2000.

No significant hazards consideration comments received: No.

Dated at Rockville, Maryland, this 15th day of March 2000.

For the Nuclear Regulatory Commission.

John A. Zwolinski,

Director, Division of Licensing Project Management, Office of Nuclear Reactor Regulation.

[FR Doc. 00–6913 Filed 3–21–00; 8:45 am]

BILLING CODE 7590–01–P

NUCLEAR REGULATORY COMMISSION

Draft Regulatory Guide; Issuance, Availability

The Nuclear Regulatory Commission has issued for public comment a draft of a new guide in its Regulatory Guide Series. This series has been developed to describe and make available to the public such information as methods acceptable to the NRC staff for implementing specific parts of the NRC's regulations, techniques used by the staff in evaluating specific problems or postulated accidents, and data needed by the staff in its review of applications for permits and licenses.

The draft guide, temporarily identified by its task number, DG–1075 (which should be mentioned in all correspondence concerning this draft guide), is titled ''Emergency Planning and Preparedness for Nuclear Power Reactors.'' This guide is being developed to propose guidance on methods acceptable to the NRC staff for complying with the NRC's regulations for emergency response plans and preparedness at nuclear power reactors.

This draft guide has not received complete staff approval and does not represent an official NRC staff position.

Comments may be accompanied by relevant information or supporting data. Written comments may be submitted to the Rules and Directives Branch, Office of Administration, U.S. Nuclear Regulatory Commission, Washington, DC 20555. Copies of comments received may be examined at the NRC Public Document Room, 2120 L Street NW., Washington, DC. Comments will be most helpful if received by May 22, 2000.

You may also provide comments via the NRC's interactive rulemaking

website through the NRC home page (http://www.nrc.gov). This site provides the availability to upload comments as files (any format), if your web browser supports that function. For information about the interactive rulemaking website, contact Ms. Carol Gallagher, (301) 415–5905; e-mail *CAG@NRC.GOV.* For information about the draft guide and the related documents, contact Mr. R.L. Sullivan at (301) 415–1123; e-mail RXS3@NRC.GOV.

Although a time limit is given for comments on this draft guide, comments and suggestions in connection with items for inclusion in guides currently being developed or improvements in all published guides are encouraged at any time.

Regulatory guides are available for inspection at the Commission's Public Document Room, 2120 L Street NW., Washington, DC. Requests for single copies of draft or final guides (which may be reproduced) or for placement on an automatic distribution list for single copies of future draft guides in specific divisions should be made in writing to the U.S. Nuclear Regulatory Commission, Washington, DC 20555, Attention: Reproduction and Distribution Services Section; or by fax to (301) 415–2289, or by e-mail to <DISTRIBUTION@NRC.GOV>. Telephone requests cannot be accommodated. Regulatory guides are not copyrighted, and Commission approval is not required to reproduce them.

(5 U.S.C. 552(a)).

For the Nuclear Regulatory Commission.

Dated at Rockville, Maryland, this 14th day of March 2000.

Charles E. Ader,

Director, Program Management, Policy, Development & Analysis Staff, Office of Nuclear Regulatory Research.

[FR Doc. 00–7101 Filed 3–21–00; 8:45 am]

BILLING CODE 7590–01–P

SECURITIES AND EXCHANGE COMMISSION

[Release No. 34–42527; File No. SR–CBOE–00–05]

Self-Regulatory Organizations; Notice of Filing and Order Granting Accelerated Approval of Proposed Rule Change by the Chicago Board Options Exchange, Inc. Relating to Option Trading Permit Auction Procedures

March 14, 2000.

Pursuant to Section 19(b)(1) of the Securities Exchange Act of 1934 (''Act''),[1] and Rule 19b–4 thereunder,[2] notice is hereby given that on March 2, 2000, the Chicago Board Options Exchange, Inc. (''CBOE'' or ''Exchange'') filed with the Securities and Exchange Commission (''SEC'' or ''Commission'') the proposed rule change as described in Items I and II below, which Items have been prepared by the Exchange. The Commission is publishing this notice to solicit comments on the proposed rule change interested persons and to grant accelerated approval to the proposed rule change.

I. Self-Regulatory Organization's Statement of the Terms of Substance of the Proposed Rule Change

The Exchange is proposing to amend the procedure through which it auctions Option Trading Permits (''Permits'') from the Permit lease pool. The text of the proposed rule change is available at the Office of the Secretary, CBOE, and at the Commission.

II. Self-Regulatory Organization's Statement of the Purpose of, and Statutory Basis for, the Proposed Rule Change

In its filing with the Commission, the Exchange included statements concerning the purpose of and basis for the proposed rule change and discussed any comments it received on the proposed rule change. The text of these statements may be examined at the places specified in Items II below. The Exchange has prepared summaries, set forth in Sections A, B, and C below, of the most significant aspects of such statements.

A. Self-Regulatory Organization's Statement of the Purpose of, and Statutory Basis for, the Proposed Rule Change

1. Purpose

Holders of Option Trading Permits have specified limited trading rights set forth in CBOE Rule 3.27. Section (a)(3) of Rule 3.27 provides for the creation of a Permit lease pool to be administered by the Exchange. The procedures for the administration of this lease pool were previously filed with and approved by the Commission.[3] Under these procedures, the Exchange conducts an auction every six months during which members and non-members who have qualified for membership may submit bids equal to the monthly rent that the bidder is willing to pay for a month-to-month Permit lease. Upon the close of the bidding period, Permits in the lease pool are awarded to the highest bidders in a number equal to the total number of Permits in the lease pool at that time.[4]

Last year, certain amendments to these procedures were filed with and approved by the Commission.[5] The most important of these amendments established a procedure for Permit bidding that is known as a ''Dutch auction.'' Under the Dutch auction procedure, each successful bidder pays the price of the lowest successful bid. Following each Dutch auction, the Exchange continues to accept bids, with a minimum bid established at the price set in the most recent Dutch auction. Permit lease payments received by the Exchange are distributed to certain previous holders of NYSE option trading rights, as provided in Rule 3.27(a)(3). The Exchange adopted the Dutch auction to promote fairer and more equitable lease payments by having everyone in the auction pay the same price.

The first Dutch auction under these new procedures was held on September 29, 1999. The auction was publicized through various means, and the submitted bids ranged from $50 to $5,000 per month, with all but six of the bids being for at least $1,300 per month. However, due to an unexpectedly low number of bidders (only 28 bids were received for the 28 available Permits), the $50 per month bid was successful. Under the existing Dutch auction rules, this resulted in a $50 monthly lease rate for all 28 successful bidders. This undervalued the trading rights conferred by the Permits, based upon the fact that the median of the bids received last September 29 was $2,750, and the average of all the bids was $2,525.

To address this situation, the Exchange proposes to amend the Permit Dutch auction process by establishing a minimum bid level in all Dutch auctions at $1,000. The Exchange believes that this level is below the fair value of the Permits, as reflected by the median and average of the bids just

[1] 15 U.S.C. 78s(b)(1).

[2] 17 CFR 240.19b–4.

[3] The procedures for the administration of the Permit lease pool were filed with the Commission in SR–CBOE–97–14. This filing provided for the issuance of Permits in connection with the transfer of the options business of the New York Stock Exchange, Inc. (''NYSE'') to CBOE and defined the rights and obligations associated with Permits. *See* Securities Exchange Act Release No. 38541 (April 23, 1997), 62 FR 23516 (April 30, 1997). The CBOE later amended the procedures for administering the Permit lease pool in SR–CBOE–97–47, which amended the manner in which the CBOE assesses the fee that is charged when a person submits a bid to receive a Permit. *See* Securities Exchange Act Release No. 39179 (October 1, 1997), 62 FR 52602 (October 8, 1997).

[4] *Id.*

[5] *See* Securities Exchange Act Release No. 41912 (September 24, 1999), 64 FR 53757 (October 4, 1999).

noted, and that this minimum bid amount is needed to ensure that the price determined by the Dutch auction is fair and equitable.

2. Statutory Basis

The Exchange believes that the revised Dutch auction procedure for the Permit lease pool will more effectively ensure that the amounts paid for Permits by each successful bidder are fair and equitable. As such, the Exchange believes that the proposed rule change is consistent with Section 6(b)(4)[6] of the Act in that is it designed to provide for the equitable allocation of reasonable dues, fees, and other charges among its members and issuers and other persons using its facilities.

B. Self-Regulatory Organization's Statement on Burden on Competition

The Exchange does not believe that the proposed rule will impose any inappropriate burden on competition.

C. Self-Regulatory Organization's Statement on Comments on the Proposed Rule Change Received From Members, Participants or Others

No written comments were either solicited or received.

III. Solicitation of Comments

Interested persons are invited to submit written data, views, and arguments concerning the foregoing, including whether the proposed rule change is consistent with the Act. Persons making written submissions should file six copies thereof with the Secretary, Securities and Exchange Commission, 450 Fifth Street, N.W., Washington, DC 20549–0609. Copies of the submissions, all subsequent amendments, all written statements with respect to the proposed rule change that are filed with the Commission, and all written communications relating to the proposed rule change between the Commission and any person, other than those that may be withheld from the public in accordance with the provisions of 5 U.S.C. 552, will be available for inspection and copying at the Commission's Public Reference Room. Copies of such filing will also be available for inspection and copying at the principal office of the Exchange. All submissions should refer to File No. SR–CBOE–00–05 and should be submitted by April 12, 2000.

[6] 15 U.S.C. 78f(b)(4).

IV. Commission's Findings and Other Granting Accelerated Approval of Proposed Rule Change

The Commission finds that the proposed rule change is consistent with the requirements of the Act and the rules and regulations thereunder applicable to a national securities exchange, and in particular, with the requirements of Section 6(b)(4),[7] because the proposed rule change provides for the equitable allocation of reasonable dues, fees, and other charges.

CBOE Rule 3.27 provides for a Permit lease pool to distribute Permits originating from the transfer of the options business of the NYSE to CBOE. Lease payments on the Permits are paid to persons identified by the NYSE. Under the existing Dutch auction rules, there is no limit on the monthly bid for a Permit. Consequently, a low bid can, and did, succeed as the lease amount for all Permits, even if the average of the bids is significantly higher (indicating a higher market value for the Permits). The proposed rule change establishes a minimum bid level of $1,000 for the Permits. The Commission finds that establishing this minimum bid is a reasonable and appropriate measure to attempt to prevent undervaluing the trading rights conferred by the Permits.

CBOE has requested that the Commission find good cause for approving the proposed rule change prior to the thirtieth day after the date of publication of notice in the **Federal Register**. Specifically, the Exchange requests that the Commission accelerate the operative date of the proposed rule change so the Exchange can employ the revised Dutch auction procedures in the next scheduled auction, that of March 15, 2000. The Exchange believes that accelerating approval of the proposed rule change will enable the Exchange to implement a procedure that more fairly and equitably allocates the cost of the lease pool Permits for the benefit of the lease payment recipient.[8] The Commission believes that permitting the Exchange to use the revised procedures in the next Dutch auction would ensure that the Permits were not significantly undervalued at another auction. Accordingly, the Commission finds good cause, consistent with Sections 6(b)(5) and 19(b)(2) of the Act,[9] to approve the proposed rule change prior to the thirtieth day after the date of publication of the notice of filing thereof in the **Federal Register**.

It is therefore ordered, pursuant to Section 19(b)(2) of the Act,[10] that the proposed rule change (SR–CBOE–00–05) is hereby approved on an accelerated basis.

For the Commission, by the Division of Market Regulations, pursuant to delegated authority.[11]

Margaret H. McFarland,

Deputy Secretary.

[FR Doc. 00–7068 Filed 3–21–00; 8:45 am]

BILLING CODE 8010–01–M

[7] 15 U.S.C. 78f(b)(4).

[8] Telephone conversation between Chris Hill, Attorney, CBOE, and Heather Traeger, Attorney, Division of Market Regulations, SEC, on March 7, 2000.

[9] 15 U.S.C. 78f(b)(5) and 78s(b)(2).

[10] 15 U.S.C. 78s(b)(2).

[11] 17 CFR 200.30–3(a)(12).

SECURITIES AND EXCHANGE COMMISSION

[Release No. 34–42533; File No. SR–MSRB–00–04]

Self-Regulatory Organizations; Notice of Filing and Immediate Effectiveness of Proposed Rule Change by the Municipal Securities Rulemaking Board Relating to Interpretation of Rule G–37 on Political Contributions and Prohibitions on Municipal Securities Business

March 15, 2000.

On March 2, 2000, the Municipal Securities Rulemaking Board (''Board'' or ''MSRB'') filed with the Securities and Exchange Commission (''Commission'' or ''SEC'') a proposed rule change, pursuant to Section 19(b)(1) of the Securities Exchange Act of 1934 (''Act''),[1] and Rule 19b–4 thereunder.[2] The proposed rule change is described in Items, I, II, and III below, which Items have been prepared by the Board. The purpose of the proposed rule change is to provide interpretive guidance concerning Rule G–37, on political contributions and prohibitions on municipal securities business. The Board has designated this proposed rule change as constituting a stated policy, practice, or interpretation with respect to the meaning, administration, or enforcement of an existing rule of the Board under Section 19(b)(3)(A) of the Act,[3] which renders the proposed rule change effective upon receipt of this filing by the Commission. The Commission is publishing this notice to solicit comments on the proposed rule change from interested persons.

[1] 15 U.S.C. 78s(b)(1).

[2] 17 CFR 240.19b–4.

[3] 15 U.S.C. 78s(b)(3)(A).

I. Self-Regulatory Organization's Statement of the Terms of Substance of the Proposed Rule Change

The Board has filed a proposed rule change consisting of a notice of interpretation, in question-and-answer format, concerning Rule G–37 (hereafter referred to as ''the proposed rule change''). The proposed rule change is as follows in *italic:*

SCOPE OF WAIVER PROVISION IN RULE G–37(i)

Q: If an enforcement agency grants an exemption from a ban on municipal securities business pursuant to Rule G–37(i), may this exemption be applied retroactively so that any municipal securities business engaged in after the ban had gone into effect but prior to the date on which the exemption was granted would not be viewed as a Rule G–37 violation?

A: Rule G–37(i) allows the enforcement agencies to exempt a dealer from a ban on municipal securities business. It is the Board's view that such an exemption is only effective as of the date of the exemption. Rule G–37(i) does not contain a provision allowing for the retroactive application of the exemption. Thus, a dealer would violate Rule G–37 if, prior to the date of the exemption, the dealer engaged in municipal securities business with an issuer while subject to a ban with this issuer because of a political contribution. As with any violation of a Board rule, the enforcement agencies have discretion in determining the type and extent of enforcement action appropriate for such violation, in light of the specific facts and circumstances. If an enforcement agency has granted an exemption to a dealer from the ban on municipal securities business, the facts and circumstances considered by such agency in granting the exemption could appropriately also be considered (together with any other relevant facts and circumstances) in determining what, if any, enforcement action should be taken against such dealer if it had engaged in municipal securities business after the ban on such business became effective but prior to the date on which the exemption was granted.

* * * * *

II. Self-Regulatory Organization's Statement of the Purpose of, and Statutory Basis for, the Proposed Rule Change

In its filing with the Commission, the Board included statements concerning the purpose of and basis for the proposed rule change and discussed any comments it received on the proposed rule change. The texts of these statements may be examined at the places specified in Item IV below. The Board has prepared summaries, set forth in Section A, B, and C below, of the most significant aspects of such statements.

A. Self-Regulatory Organization's Statement of the Purpose of, and Statutory Basis for, the Proposed Rule Change

1. Purpose

On April 7, 1994, the Commission approved Board Rule G–37, on political contributions and prohibitions on municipal securities business.[4] Since that time, the Board has received numerous inquiries concerning the application of the rule. In order to assist the municipal securities industry and, in particular, brokers, dealers, and municipal securities dealers in understanding and complying with the provisions of the rule, the Board published nine prior notices of interpretation which set forth, in question-and-answer format, general guidance on Rule G–37.[5] In prior filings with the Commission, the Board stated that it will continue to monitor the application of Rule G–37 and, from time to time, will publish additional notices of interpretations, as necessary.[6] Recently, the Board was asked about the scope of the waiver provision in Rule G–37(i). Accordingly, the Board is publishing this tenth set of questions and answers.

2. Basis

The Board believes that the proposed rule change is consistent with Section 15B(b)(2)(C) of the Act,[7] which requires, in pertinent part, that the Board's rules shall:

be designed to prevent fraudulent and manipulative acts and practices, to promote just and equitable principles of trade, to foster cooperation and coordination with persons engaged in regulating, clearing, settling, processing information with respect to, and facilitating transactions in municipal securities, to remove impediments to and perfect the mechanism of a free and open market in municipal securities, and, in general, to protect investors and the public interest.

B. Self-Regulatory Organization's Statement on Burden on Competition

The Board does not believe that the proposed rule change will impose any burden on competition not necessary or appropriate in furtherance of the proposes of the Act since it applies equally to all brokers, dealers and municipal securities dealers.

C. Self-Regulatory Organization's Statement on Comments on the Proposed Rule Change Received from Members, Participants, or Others

Written comments were neither solicited nor received.

III. Date of Effectiveness of the Proposed Rule Change and Timing for Commission Action

The Board has designated this proposed rule change as constituting a stated policy, practice, or interpretation with respect to the meaning, administration, or enforcement of an existing Board rule under Section 19(b)(3)(A) of the Act,[8] which renders the proposed rule change effective upon receipt of this filing by the Commission.

IV. Solicitation of Comments

Interested persons are invited to submit written data, views, and arguments concerning the foregoing, including whether the proposed rule change is consistent with the Act. persons making written submissions should file six copies thereof with the Secretary, Securities and Exchange Commission, 450 Fifth Street, N.W., Washington, D.C. 20549–0609. Copies of the submission, all subsequent amendments, all written statements with respect to the proposed rule change that are filed with the Commission, and all written communications relating to the proposed rule change between the Commission and any person, other than those that may be withheld from the public in accordance with the provisions of 5 U.S.C. 552, will be available for inspection and copying in the Commission's Public Reference Room. Copies of the filing will also be available for inspection and copying at the Board's principal offices. All submissions should refer to File No. SR–MSRB–00–04 and should be submitted by April 12, 2000.

[4] Securities Exchange Act Release No. 33868, 59 FR 17621 (April 13, 1994). The rule applies to contributions made on and after April 25, 1994.

[5] *See MSRB Reports,* Vol. 14, No. 3 (June 1994) at 11–16; Vol. 14, No. 4 (Aug. 1994) at 27–31; Vol. 14, No. 5 (Dec. 1994) at 8; Vol. 15, No. 1 (April 1995) at 21; Vol. 15, No. 2 (July 1995) at 3–4; Vol. 16, No. 1 (Jan. 1996) at 31; Vol. 16, No. 3 (Sept. 1996) at 35–36; Vol. 17, No. 3 (Oct. 1997) at 11–12; and Vol. 18, No. 2 (Aug. 1998) at 11–12. *See also MSRB Rule Book* (January 1, 2000) at 195–204.

[6] *See* Securities Exchange Act Release No. 34161 (June 6, 1994, 59 FR 30379 (June 13, 1994) (File No. SR–MSRB–94–6) and Securities Exchange Act Release No. 34603 (August 25, 1994), 59 FR 45049 (August 31, 1994) (File No. SR–MSRB–94–15).

[7] 15 U.S.C. 78o–4(b)(2)(C).

[8] 15 U.S.C. 78s(b)(3)(A).

For the Commission, by the Division of Market Regulation, pursuant to delegated authority.[9]

Margaret H. McFarland,

Deputy Secretary.

[FR Doc. 00–7034 Filed 3–21–00; 8:45 am]

BILLING CODE 8010–01–M

SECURITIES AND EXCHANGE COMMISSION

[Release No. 34–42536; File No. SR–NASD–99–75]

Self-Regulatory Organizations; National Association of Securities Dealers, Inc.; Order Granting Approval to Proposed Rule Change Relating to ECN and ATS Participation in the ITS/CAES System

March 16, 2000.

I. Introduction

On December 27, 1999, the National Association of Securities Dealers, Inc. (''NASD'' or ''Association''), through its wholly owned subsidiary, The Nasdaq Stock Market, Inc. (''Nasdaq''), submitted to the Securities and Exchange Commission (''Commission''), pursuant to Section 19(b)(1) of the Securities Exchange Act of 1934 (''Exchange Act'' or ''Act'')[1] and Rule 19b–4 thereunder,[2] a proposed rule change to permit Electronic Communication Networks (''ECNs'') and Alternative Trading Systems (''ATSs'')[3] to register as market makers in listed securities using Nasdaq quotation and trading facilities.

The proposed rule change was published for comment in the **Federal Register** on February 1, 2000.[4] One comment was received on the proposal.[5] This order approves the proposed rule change.

II. Description

Nasdaq operates a trading system known as the Computer Assisted Execution System (''CAES''), which allows NASD member firms to direct orders in Consolidated Quotation System (''CQS'') securities (''*i.e.,* listed securities) to market makers for execution. Through CAES, NASD order-entry firms and market makers can participate in the ''third market''[6] by entering market and limit orders in exchange-listed securities to be executed against other market makers quoting in those securities. CAES also serves as the NASD's interface with the Intermarket Trading System (''ITS''), which links the national securities exchanges.[7]

Traditional market makers actively make markets in a large number of New York Stock Exchange and American Stock Exchange listed stocks in the third market. While many NASD member firms act as third market makers today, Nasdaq believes that certain enhancements to CAES could provide additional benefits to all NASD members. The enhancements would allow CAES Market Makers to compete more effectively with all markets by providing the best possible executions for investors, thereby improving the national market system.

Accordingly, Nasdaq proposes to allow ECNs and ATSs to choose to be ITS/CAES Market Makers by amending NASD Rules 5210(e), 5220 and 6320, to include ECNs and ATSs within the definition of ''ITS/CAES Market Maker'' and ''CQS Market Maker,'' and to require the execution of an ECN and ATS addendum to the ITS/CAES Market Maker application agreement. These changes would allow ECNs and ATSs to compete on an equal basis with other market makers, yet also require ECNs and ATSs to assume the additional obligations and restrictions imposed upon ITS/CAES Market Makers by the ITS Plan and NASD rules. An ECN or ATS that chooses to exercise this option of registration, consequently, would be required to post two-sided quotations, be firm for the price and size of those quotations, and participate in CAES on the same terms as other ITS/CAES Market Makers.[8] This selection would also impose the additional compliance duties traditionally required of market makers participating in ITS/CAES, including, for example, the rules concerning pre-opening application, trade through, locked and crossed markets, and block transactions.[9] ECNs and ATSs would assume the added responsibility for implementing all technological and programming modifications to their internal systems to demonstrate compliance with these requirements.

In registering as ITS/CAES Market Makers, ECNs and ATSs will be required to operate on terms that are the same as traditional CAES Market Makers. In particular, within the ITS/CAES market, there will be an absolute prohibition against quote access fees. Nasdaq believes that, because of the CAES interface with ITS, the implementation on quote access fees would be infeasible within CAES and would not be consistent with the terms of the ITS Plan.

In addition, as discussed above, the NASD intends to modify the operation of CAES to accommodate ECN and ATS participation. In the current CAES environment, all orders are executed against market makers through an automatic executive process. The system delivers a report of a completed execution at the market maker's quoted price and size when another CAES market maker or exchange chooses to access that market maker's quote. Because ECNs and ATSs are reluctant to participate within the current automatic execution environment, Nasdaq is working on modifications to CAES to facilitate order delivery interaction for any ITS/CAES Market Maker that chooses to operate in an order delivery mode (with an automated response to the delivered orders). The change would make it clear that all ITS/CAES Market Makers could receive the delivery of an order (as opposed to an execution report), and immediately accept or decline that delivery by automated

[9] 17 CFR 200.30–3(a)(12).

[1] 15 U.S.C. 78s(b)(1).

[2] 17 CFR 240.19b–4.

[3] The term ECN is defined, with certain exceptions, as any electronic system that widely disseminates to third parties orders entered into the ECN by an exchange market maker or OTC market maker, and permits such orders to be executed against in whole or in part. *See* Exchange Act Rule 11Ac1–1(a)(8). The term ATS is defined more broadly as any organization, association, person, group of persons, or system: (1) That constitutes, maintains, or provides a market place or facilities for bringing together purchasers and sellers of securities or for otherwise performing with respect to securities the functions commonly performed by a stock exchange within the meaning of Exchange Act Rule 3b–16; and (2) that does not: (i) Set rules governing the conduct of subscribers other than the conduct of such subscribers' trading on such organization, association, person, group of persons, or system; or (ii) discipline subscribers other than by exclusion from trading. *See* Regulation ATS, Sec. 242.300(a). Essentially, an ECN is a type of ATS.

[4] *See* Securities Exchange Act Release No. 42353 (January 20, 2000), 65 FR 4857.

[5] *See* letter to Jonathan G. Katz, Secretary, Commission, from Sam Scott Miller, Orrick, Herrington & Sutcliffe, LLP, on behalf of MarketXT, dated March 3, 2000 (''MarketXT Letter'').

[6] The third market refers to over-the-counter trading of exchange-listed securities.

[7] ITS is a communications network designed to facilitate intermarket trading in exchange-listed securities by linking the NASD and the national securities exchanges. Operation of ITS is governed by a national market system plan known as the ''Plan for the Purpose of Creating and Operating an Intermarket Communications Linkage Pursuant to Section 11A(a)(3)(B) of the Securities Exchange Act of 1934'' (''ITS Plan'').

[8] With respect to the two-sided quotation obligation, ECN and ATS ITS/CAES Market Makers will be permitted to auto-quote in 100 share lots away from the national best bid and offer (''NBBO'') to the extent that a particular ECN or ATS does not have a customer order to represent. If an ECN or ATS ITS/CAES Market Maker quotation is accessed because such quotation becomes the NBBO or is subject to another rule requiring its execution, the ECN or ATS ITS/CAES Market Maker will be required to assume a proprietary position in that security.

[9] NASD Rules 5240, 5262, 5263, and 5264, respectively.

means.[10] A decline would be permissible only if it were consistent with the Commission's and the NASD's firm quote rules.

Nasdaq contends that this modification will allow market makers to operate effectively and rapidly in fast moving markets. In comparing the proposed CAES order delivery system with the ITS configuration, Nasdaq anticipates that CAES order delivery market makers will be capable of responding to CAES and ITS orders in approximately 2–5 seconds.[11]

III. Discussion

The Commission finds that the proposed rule change is consistent with the requirements of the Act and the rules and regulations thereunder applicable to the Association, and, in particular, with the requirements of Section 15A(b)(6).[12] Section 15A(b)(6) requires that the rules of a registered national securities association be designed to prevent fraudulent and manipulative acts and practices, to promote just and equitable principles of trade, to foster cooperation and coordination with persons engaged in regulating, clearing, settling, processing information with respect to, and facilitating transactions in securities, to remove impediments to and perfect the mechanism of a free and open market and a national market system, and, in general, to protect investors and the public interest; and the rules are not designed to permit unfair discrimination between customers, issuers, brokers, or dealers.

In addition, the Commission believes that the proposed rule change is consistent with the provisions of Sections 11A(a)(1)(C), 11A(a)(1)(D), and 11A(a)(2) of the Exchange Act. Section 11A(a)(1)(C) provides that it is in the public interest and appropriate for the protection of investors and the maintenance of fair and orderly markets to assure: (1) Economically efficient execution of securities transactions; (2) fair competition among brokers and dealers; (3) the availability to brokers, dealers and investors of information with respect to quotations and transactions in securities; (4) the practicability of brokers executing investors' orders in the best market; and (5) an opportunity for investors' orders to be executed without the participation of a dealer. Section 11A(a)(1)(D) states that the linking of all markets for qualified securities through communications and data processing facilities will foster efficiency, enhance competition, increase the information available to brokers, dealers and investors, facilitate the offsetting of investor's orders, and contribute the best execution of such orders. Section 11A(a)(2) directs the Commission to facilitate the establishment of a national market system for qualified securities. Overall, the Commission believes that the proposed rule promotes the objectives of these sections of the Exchange Act by encouraging participation in the national market system for listed securities and providing fair access for all NASD members, ultimately benefiting investors and the public interest.

Because ITS remains the primary link between the registered exchanges and Nasdaq for listed securities, ECN and ATS access to ITS is an important Commission goal. Specifically, the Commission seeks to make information non prices, volume, and quotes for securities in *all* markets available to *all* investors, so that buyers and sellers of securities, wherever located, can make informed investment decisions and not pay more than the lowest price at which someone is willing to sell, and not sell for less than the highest price a buyer is prepared to offer. The Commission notes, however, that information alone is not enough. There must be an avenue for accessing markets disseminating market information. Integrating ECNs and ATSs into ITS provides access from other ITS/CAES Market Makers and other markets to the quotes displayed by the ECNs and ATSs.[13]

The number of ECNs and ATSs has increased significantly over the past several years, as has their share of the market in Nasdaq securities. This increased competition has benefited the marketplace in many ways—among other things, it has encouraged the existing exchanges to improve their services, and has given institutional investors additional venues in which to trade. In addition, ECNs have helped to contribute to narrower spreads to the benefit of investors, including retail investors, who have enjoyed significant cost savings when trading Nasdaq securities. While these benefits have accrued to Nasdaq securities, ECNs have not traded in great measures in securities listed on traditional exchanges.

Linking ECNs and ATSs to ITS by permitting them to register as ITS/CAES Market Makers will improve investors' ability to obtain best execution of their orders in listed stocks. Furthermore, the Commission believes that ECN and ATS participation in CAES should have a positive impact upon the third market, as well as trading in listed securities overall, by adding new competitive quoting vehicles, thereby contributing to a more dynamic and competitive market.

The Commission believes it is appropriate to require ECNs and ATSs that register as ITS/CAES Market Makers to fulfill the same intermarket obligations as are required of traditional market makers. The Commission expects the NASD to ensure that ECN and ATS ITS/CAES Market Makers (as well as non-ECN and non-ATS ITS/CAES Market Makers) carry our necessary technical and programming modifications to their internal systems to demonstrate an ability to comply with these obligations.

ECNs and ATSs that register as ITS/CAES Market Makers will be required to post and maintain two-sided quotations, as well as be firm for the price and size of those quotations, as required in the ITS Plan. In addition, ECN and ATS ITS/CAES Market Makers will be permitted to autoquote in 100 share lots away from the NBBO when they do not have a customer order to represent. The Commission finds it consistent with the Exchange Act to require ECNs and ATSs that participate in ITS/CAES to display two-sided quotes at all times and to be firm for their displayed quotes, including those quotes that do not represent customers orders. In the Commission's view, it is reasonable to permit an ECN or ATS ITS/CAES Market Maker to autoquote in 100 share lots away from the NBBO when it does not have a customer order to represent because ECNs and ATSs typically do not take proprietary positions. An ECN or ATS ITS/CAES Market Maker, however, will be required to be firm for its displayed quote, in accordance with Commission and NASD firm quote rules for any orders that seek to trade with that quote. ECNs and ATSs could reduce the likelihood of an execution at that quote by quoting away from the best market price. Although ECNs and ATSs do not generally assume proprietary positions in the securities they trade, the Commission believes it is appropriate to require them to comply

[10] If order delivery is selected, the ITS/CAES Market Maker (ECN or non-ECN) would be required to demonstrate to Nasdaq its ability to conform to system specifications, which would mandate an automated and immediate acceptance or rejection, consistent with Commission and NASD firm quote obligations.

[11] The ITS Plan does not have any requirement related to response times. In fact, in ITS, when one participant forwards a commitment to another, the commitment has a life of one minute or two minutes. The obligation to respond to an ITS commitment comes from the Commission Firm Quote Rule. 17 CFR 240.11Ac1–1.

[12] 15 U.S.C. 780–3(b)(6).

[13] ECNs also are accessible through becoming a subscriber to the system, and by telephone.

with the same ITS requirements as other market makers if they voluntary choose to register as an ITS/CAES Market Makers.

The Commission notes that ECN and ATS ITS/CAES Market Makers will also be required to follow the NASD's rules, as well as the terms of the ITS Plan, concerning the pre-opening application, trade throughs, locked and crossed markets, and block transactions.[14] These market integrity provisions provide for continuity of transaction among the various market centers.

The Commission also believes it is appropriate to prohibit ECNs and ATSs that choose to register as ITS/CAES Market Makers from charging quote access fees for trades effected through CAES. Market Makers are prohibited under NASD rules from charging access fees when trading through CAES. Moreover, trades in ITS between markets are not subject to market fees, even though these markets charge fees to their members for executing trades on that market.[15]

The Commission also believes it is not inconsistent with the Exchange Act to allow the CAES functionality to operate in order delivery mode, as opposed to automatic execution mode, in accessing an ITS/CAES Market Maker's quote. ECNs, which, to date, have functioned only within order delivery systems (*e.g.,* SelectNet for Nasdaq securities), have been reluctant to participate in CAES due to the automatic execution feature. The proposed rule change will allow all ITS/CAES Market Makers, including ECNs and ATSs that choose to register as such, to operate in CAES in either order delivery mode or automatic execution mode. The Commission believes that requiring ITS/CAES Market Makers that choose to operate in order delivery mode to have an automated response to an incoming order should ensure that transactions done through CAES, as well as those done through the ITS/CAES interface, are executed efficiently. The ability of an ITS/CAES Market Maker to select the mode of operation in which it receives orders of ITS commitments addresses the ECNs' concerns over exposure to double executions.[16] Specifically, allowing an ITS/CAES Market Maker to operate in order delivery mode will permit it to suspend acceptance of orders when it is in the process of updating its quote, providing such action is in compliance with the Commission's and NASD's firm quote rules.

Finally, the Commission believes that the proposed rule change is not inconsistent with the terms of the ITS Plan. Specifically, under the proposed rule change, ITS/CAES Market Makers will continue to be required to provide automated responses to all ITS commitments sent by other exchange participants to the third market. The Commission notes that, although the proposed rule change may affect the operation of the ITS pre-opening application,[17] no amendment to the ITS Plan is technically required. Specifically, the ITS Plan defines ''ITS/CAES Market Maker'' as an ''NASD member that is registered as a market maker with the NASD * * * with respect to one or more specified ITS/CAES securities.'' Thus, the NASD's proposed definition of ''ITS/CAES Market Maker'' does not conflict with or violate the ITS Plan. Furthermore, nothing in the ITS Plan requires that ITS/CAES Market Maker automatically execute commitments received through ITS.

IV. Conclusion

It is therefore ordered, pursuant to Section 19(b)(2) of the Act,[18] that the proposed rule change (SR–NASD–99–75) is approved.

For the Commission, by the Division of Market Regulation, pursuant to delegated authority.[19]

Margaret H. McFarland,

Deputy Secretary.

[FR Doc. 00–7067 Filed 3–21–00; 8:45 am]

BILLING CODE 8010–01–M

[14] A trade through occurs when a transaction is effected at a price below the best prevailing bid, or above the best prevailing offer. The NASD's rules and the ITS Plan require price protection among the various markets by ensuring that the best national bids and offers are provided opportunities to trade with other markets effecting trades outside the best national quote. The NASD's rules and the ITS Plan also contain a block trade policy that provides special rights to any market displaying the best national bid or offer when block-size transactions are occurring in another market.

[15] The Commission received one comment letter from an ECN regarding the proposed rule change. *See* MarketXT Letter. MarketXT believes that ECNs should be permitted to charge fees in the ITS/CAES market because Nasdaq has proposed a rule change that would permit market makers to charge an access fee for agency quotes in the Nasdaq market. *See* Securities Exchange Act Release No. 41343 (April 28, 1999), 64 FR 24430 (May 6, 1999) (File No. SR–NASD–99–16). ECN fees have been permitted in the Nasdaq market since ECNs were first linked to that market in 1997. The Commission has stated that it is considering options to reduce or eliminate ECN fees in the Nasdaq market. The Commission does not believe that investors' interests are best served by permitting ECN fees in the ITS market, where fees are not permitted among existing participants.

[16] Double execution could occur if an ECN displays a customer order to buy and an order to sell comes in through ITS, while another order to sell comes into the ECN at the same time. Automatic execution would force the ECN to honor both sell orders.

[17] Generally, under ITS rules, an exchange specialist is required to accept those pre-opening responses sent to the exchange by market makers from other participant markets prior to the opening of their markets for trading in the security. If, however, one or more market makers from other participant markets have already opened trading in a security, the exchange specialist is not required to (but may in his discretion) accept pre-opening responses from the other participant market for the purpose of including them in the opening transaction. Because a pre-opening response from the ITS/CAES market is sent in aggregate form—that is, pre-opening third market buy and sell interest from all third market makers—is sent as one response, it is possible that an ECN and ATS ITS/CAES Market Maker trading a security before the opening will trigger the exception to the requirement that the exchange specialist accept a pre-opening response from the third market. The same procedure applies of re-openings following trading halts. *See* Exhibit A of the ITS Plan, ''Pre-Opening Application rule,'' Sec. (b)(iii)(B).

[18] 15 U.S.C. 78s(b)(2).

[19] 17 CFR 200.30–3(a)(12).

DEPARTMENT OF STATE

[Public Notice 3260]

Culturally Significant Objects Imported for Exhibition Determinations: ''Michelangelo to Picasso: Master Drawings From the Collection of the Albertina, Vienna''

DEPARTMENT: United States Department of State.

ACTION: Notice.

SUMMARY: Notice is hereby given of the following determinations: Pursuant to the authority vested in me by the Act of October 19, 1965 [79 Stat. 985, 22 U.S.C. 2459], the Foreign Affairs Reform and Restructuring Act of 1998 [*112 Stat. 2681 et seq.*], Delegation of Authority No. 234 of October 1, 1999 [64 FR 56014], and Delegation of Authority No. 236 of October 19, 1999, as amended by Delegation of Authority No. 236–1 of November 9, 1999, I hereby determine that the objects to be included in the exhibit, ''Michelangelo to Picasso: Master Drawings from the Collection of the Albertina, Vienna,'' imported from abroad for the temporary exhibition without profit within the United States, are of cultural significance. These objects are imported pursuant to a loan agreement with the foreign lender. I also determine that the temporary exhibition or display of the exhibit objects at the Frick Collection, New York, NY, from on or about April 17, 2000, to on or about June 18, 2000, is in the national interest. Public Notice of these determinations is ordered to be published in the **Federal Register**.

FOR FURTHER INFORMATION CONTACT: For further information, including a list of exhibit objects, contact Paul W.

Manning, Attorney-Adviser, Office of the Legal Adviser, 202/619–5997, and the address is Room 700, United States Department of State, 301 4th Street, SW, Washington, DC 20547–0001.

Dated: March 15, 2000.

William B. Bader,

Assistant Secretary for Educational and Cultural Affairs, United States Department of State.

[FR Doc. 00–7105 Filed 3–21–00; 8:45 am]

BILLING CODE 4710–28–P

DEPARTMENT OF TRANSPORTATION

Federal Aviation Administration

[Summary Notice No. PE–2000–10]

Petitions for Exemption; Summary of Petitions Received; Dispositions of Petitions Issued

AGENCY: Federal Aviation Administration (FAA), DOT.

ACTION: Notice of petitions for exemption received and of dispositions of prior petitions.

SUMMARY: Pursuant to FAA's rulemaking provisions governing the application, processing, and disposition of petitions for exemption (14 CFR Part 11), this notice contains a summary of certain petitions seeking relief from specified requirements of the Federal Aviation Regulations (14 CFR Chapter I), dispositions of certain petitions previously received, and corrections. The purpose of this notice is to improve the public's awareness of, and participation in, this aspect of FAA's regulatory activities. Neither publication of this notice nor the inclusion or omission of information in the summary is intended to affect the legal status of any petition or its final disposition.

DATES: Comments on petitions received must identify the petition docket number involved and must be received on or before April 11, 2000.

ADDRESSES: Send comments on any petition in triplicate to: Federal Aviation Administration, Office of the Chief Counsel, Attn: Rule Docket (AGC–200), Petition Docket No. _____, 800 Independence Avenue, SW., Washington, DC. 20591.

Comments may also be sent to electronically to the following internet address: 9-NPRM-cmts@faa.gov.

The petition, any comments received, and a copy of any final disposition are filed in the assigned regulatory docket and are available for examination in the Rules Docket (AGC–200), Room 915G, FAA Headquarters Building (FOB 10A), 800 Independence Avenue, SW., Washington, DC. 20591; telephone (202) 267–3132.

FOR FURTHER INFORMATION CONTACT: Cherie Jack (202) 267–7271 or Vanessa Wilkins (202) 267–8029 Office of Rulemaking (ARM–1), Federal Aviation Administration, 800 Independence Avenue, SW, Washington, DC 20591.

This notice is published pursuant to paragraphs (c), (e), and (g) of § 11.27 of Part 11 of the Federal Aviation Regulations (14 CFR Part 11).

Issued in Washington, DC., on March 16, 2000.

Donald P. Byrne,

Assistant Chief Counsel for Regulations.

Dispositions of Petitions

Docket No.: 26183.

Petitioner: Air Transport Association of America.

Section of the FAR Affected: 14 CFR appendix H to part 121.

Description of Relief Sought/ Disposition: To permit member airlines of the ATA and other similarly situated part 121 certificate holders to continue to use Level C simulators for pilot-in-command initial and upgrade training and checking.

Grant, 01/31/2000, Exemption No. 54000

Docket No.: 27202.

Petitioner: Skydive Arizona, Inc.

Section of the FAR Affected: 14 CFR 105.43(a).

Description of Relief Sought/ Disposition: To permit SAI to allow nonstudent foreign nationals to participate in SAI-sponsored parachute jumping events without complying with the parachute equipment and packing requirements of § 105.43(a).

Grant, 01/21/2000, Exemption No. 7106

Docket No.: 29076.

Petitioner: RR Investments, Inc., d.b.a. Million Air Dallas.

Section of the FAR Affected: 14 CFR 135.143(c)(2).

Description of Relief Sought/ Disposition: To permit Million Air Dallas to operate certain aircraft under part 135 without a TSO–C112 (Mode S) transponder installed on each aircraft.

Grant, 01/28/2000 Exemption No. 6718A

Docket No.: 29776.

Petitioner: Pomona Valley Pilots Association.

Section of the FAR Affected: 14 CFR 135.251, 135.255, 135.353, and appendixes I and J to part 121.

Description of Relief Sought/ Disposition: To permit the PVPA to conduct local sightseeing flights for the 25th annual Pomona Valley Air Fair at Cable Airport, Upland, California, on January 8 and 9, 2000, for compensation or hire, without complying with certain anti-drug and alcohol misuse prevention requirements of part 135.

Grant, 01/05/2000, Exemption No. 7094

Docket No.: 29795.

Petitioner: Western North Carolina Pilots Association, Inc.

Section of the FAR Affected: 14 CFR 135.251, 135.255, 135.353, and appendixes I and J to part 121.

Description of Relief Sought/ Disposition: To permit the WNCPA to conduct local sightseeing flights at the Asheville Regional Airport for fall scenic rides on October 23 and 24, 1999, for compensation or hire, without complying with certain anti-drug and alcohol misuse prevention requirements of part 135.

Grant, 10/22/1999, Exemption No. 7049

Docket No.: 29846.

Petitioner: Air Cargo Carriers, Inc.

Section of the FAR Affected: 14 CFR 135.143(c)(2).

Description of Relief Sought/ Disposition: To permit Air Cargo to operate certain aircraft under part 135 without a TSO–C112 (Mode S) transponder installed in each aircraft.

Grant, 01/11/2000, Exemption No. 7124

Docket No.: 29879.

Petitioner: Santoku Aviation Electric, Inc.

Section of the FAR Affected: 14 CFR 145.47(b).

Description of Relief Sought/ Disposition: To permit SAE to substitute the calibration standards of the National Research Laboratory of Metrology and the Electrotechnical Laboratory, Japan's national standards organizations, for the calibration standards of the U.S. National Institute of Standards and Technology, formerly the National Bureau of Standards, to test its inspection and test equipment.

Grant, 01/14/2000, Exemption No. 7105

[FR Doc. 00–7043 Filed 3–21–00; 8:45 am]

BILLING CODE 4910–13–M

DEPARTMENT OF TRANSPORTATION

Research and Special Programs Administration

[Docket No. RSPA–98–4470]

Pipeline Safety: Meetings of Pipeline Safety Advisory Committees

AGENCY: Office of Pipeline Safety, Research and Special Programs Administration, DOT.

ACTION: Notice of Advisory Committee meetings.

SUMMARY: Pursuant to section 10(a)(2) of the Federal Advisory Committee Act (Pub. L. 92–463, 5 U.S.C. App. 1) notice is hereby given of the following meetings of the Technical Pipeline Safety Standards Committee (TPSSC) and the Technical Hazardous Liquid Pipeline Safety Standards Committee (THLPSSC). The TPSSC and the THLPSSC are statutorily mandated advisory committees that assist RSPA's Office of Pipeline Safety in its consideration of proposed safety regulations, risk assessments, and safety policies for natural gas and hazardous liquid pipelines. Each committee has an authorized membership of 15 persons, five each from government, industry, and the public. The committees meet in May and November of each year. Each Committee meeting, as well as a joint session of the two Committees, is held at the Department of Transportation, Nassif Building, 400 Seventh Street, SW, Washington, DC 20590. The May 3–4, 2000, meetings will be held in room 2230.

ADDRESSES: Comments on these meetings should be sent to the Dockets Facility, U.S. Department of Transportation, Plaza 401, 400 Seventh Street, SW, Washington, DC 20590–0001. Alternatively, comments may be e-mailed to ops.comments@rspa.dot.gov. All comments must reference Docket No. RSPA–98–4470. The Dockets Facility is located on the plaza level of the Nassif Building in Room 401, 400 Seventh Street, SW, Washington, DC. The Dockets Facility is open from 10 a.m. to 5 p.m., Monday through Friday, except on Federal holidays.

Information on Services for Individuals With Disabilities

For information on facilities or services for individuals with disabilities or to request special assistance at the meeting, contact Jenny Donohue at (202) 366–4046.

FOR FURTHER INFORMATION CONTACT: Mary Jo Cooney, OPS, (202) 366-4774 or Richard Huriaux, OPS, (202) 366–4565, regarding the subject matter of this notice.

SUPPLEMENTARY INFORMATION: On May 3, 2000, at 9 a.m., the Technical Pipeline Safety Standards Committee (the natural gas advisory committee) will meet in room 2230 of the Nassif Building. The preliminary agenda includes:

1. Update on Plastic Pipe Research
2. Proposal for ''Class 0'' Class Location
3. Gas Gathering Line Definition
4. Gas Pipeline Safety Standards
5. Risk Management: Local Distribution Company Initiative

On May 3, 2000, at 1 p.m., the TPSSC will be joined by members of the THLPSSC for a joint session. The preliminary agenda includes:

1. RSPA Updates and Welcome from Administrator
2. Pipeline Safety Program Reauthorization
3. Budget/Appropriations
4. Community Right-to-Know
4. Producer-operated Outer Continental Shelf Pipelines (Vote)
5. Pipeline Integrity Management in High Consequence Areas
6. National Pipeline Mapping System (NPMS)

The joint session continues on May 4, 2000, at 9 a.m. in room 2230:

7. Periodic Updates to Pipeline Safety Regulations (Vote)
8. Status Report on Path Forward and Dig Safely Initiatives
9. NTSB Recommendations
10. OPS Response Plan Update

On May 4, 2000, at 12:30 p.m., the THLPSSC will meet in room 2230 of the Nassif Building. The preliminary agenda includes:

1. Pipeline Integrity Management in High Consequence Areas (Vote)
2. Corrosion Control on Hazardous Liquid Pipelines (Vote)
3. Unusually Sensitive Areas (USA) Project (Vote)
4. Spill Data Presentation
5. Pressure Testing of Older Pipelines in Terminal
6. Oil Pollution Act Developments

All three meetings will be open to the public. Members of the public will have an opportunity to make short statements on the topics under discussion. Anyone wishing to make an oral statement must notify Jenny Donohue, Room 7128, Department of Transportation, Nassif Building, 400 Seventh Street, SW, Washington, DC 20590, telephone (202) 366–4046, not later than April 21, 2000, on the topic of the statement and the time requested for presentation. The presiding officer at each meeting may deny any request to present an oral statement and may limit the time of any presentation.

Authority: 49 U.S.C. 60102, 60115.

Issued in Washington, DC on March 16, 2000.

Richard B. Felder,

Associate Administrator for Pipeline Safety.

[FR Doc. 00–7061 Filed 3–21–00; 8:45 am]

BILLING CODE 4910–60–P

DEPARTMENT OF TRANSPORTATION

Surface Transportation Board

[Section 5a Application No. 1 (Sub–No. 10)]

Household Goods Carriers Bureau Committee—Agreement

AGENCY: Surface Transportation Board.

ACTION: Extension of time to file comments and replies; correction of prior notice.

SUMMARY: The Surface Transportation Board (Board) is (1) extending the time to file comments and replies in this proceeding and (2) announcing a correction to its prior notice published in the **Federal Register**.

DATES: Comments are now due by April 24, 2000; replies are now due by May 8, 2000.

ADDRESSES: Send an original and 10 copies of comments and replies, referring to ''Section 5a Application No. 1 (Sub-No. 10)'' to: Surface Transportation Board, Office of the Secretary, Case Control Unit, 1925 K Street, N.W., Washington, DC 20423.

FOR FURTHER INFORMATION CONTACT: Joseph H. Dettmar, (202) 565–1600. [TDD for the hearing impaired: 1–800–877–8339.]

SUPPLEMENTARY INFORMATION: On February 11, 2000 at 65 FR 7098–99, we published a notice in the **Federal Register** requesting comments and replies from interested parties in this proceeding. Copies of the version of this notice served on the same date are available on the Board's website at ''WWW.STB.DOT.GOV.'' By petition received via FAX on March 10, 2000, the Household Goods Carriers' Bureau Committee requests an extension of time to file comments to April 24, 2000. By this notice, we are granting this request, for all participants, and are simultaneously extending the deadline for filing replies to May 8, 2000.

Our prior notice mistakenly inverted the dates for filing comments and replies. In view of the extension that we are granting herein, the dates in our prior notice are obsolete.

Decided: March 16, 2000.

By the Board.

Vernon A. Williams,

Secretary.

[FR Doc. 00–7088 Filed 3–21–00; 8:45 am]

BILLING CODE 4915–00–P

TWENTY-FIRST CENTURY WORKFORCE COMMISSION

Notice of Public Information Hearing

AGENCY: Twenty-First Century Workforce Commission.

ACTION: Notice of public information hearing.

SUMMARY: This notice is to announce a public information hearing on Wednesday, March 29, 2000. Members of the public are invited to attend the hearing. Several witnesses have been invited by the Commissioners to testify and to address the questions identified by the agenda set forth below.

The purpose of the hearing is for Commissioners to learn how Northern Virginia companies, educational institutions, community organizations, and governments are working together so more of its residents gain the skills and knowledge necessary to be part of the Information Technology (IT) workforce.

DATES: The Public Information Hearing will be held on Wednesday, March 29, 2000, from 9:00 am to approximately 4:00 p.m. Registration is from 9:00 am to 10:00 am. The dates, locations and times for subsequent meetings will be announced in advance in the **Federal Register**.

ADDRESSES: George Mason University, Fairfax Campus is located at 4400 University Drive, Fairfax, VA 22030. Main Phone: (703) 993–1000. The hearing will be held at the Egan Research building. For information, call (617) 373–2000. (TTY) (617) 373–3768. Web-based directions can be found at: http://coyote.gmu.edu/map/. All interested parties are invited to attend this Information Hearing. Seating may be limited and will be available on a first-come, first-serve basis.

FOR FURTHER INFORMATION CONTACT: Mr. Hans Meeder, Executive Director, Twenty-First Century Workforce Commission, 1201 New York Avenue, NW, Suite 700, Washington, DC 20005. (Telephone (202–289–2939. TTY (202) 289–2977) These are not toll-free numbers. Email: *Workforce21@nab.com.*

SUPPLEMENTARY INFORMATION: Establishment of the Twenty-First Century Workforce Commission was mandated by Subtitle C of Title III of the Workforce Investment Act, Sec. 331 of Pub. L. 105–220, 112 Stat. 1087–1091, (29 U.S.C. 2701 note), signed into law on August 7, 1998. The 15 voting member Twenty-First Century Workforce Commission is charged with studying all aspects of the information technology workforce in the United States. Notice is hereby given of the second Public Information Hearing of the Twenty-First Century Workforce Commission.

The Workforce Investment Act (Pub. L. 105–220), signed into law on August 7, 1998, established the Twenty-First Century Workforce Commission. The Commission is charged with carrying out a study of the information technology workforce in the U.S., including the examination of the following issues:

1. What skills are currently required to enter the information technology workforce? What technical skills will be demanded in the near future?
2. How can the United States expand its number of skilled information technology workers?
3. How do information technology education programs in the United States compare with other countries in effectively training information technology workers? [The Commission study should place particular emphasis upon contrasting secondary, non-and-post-baccalaureate degree education programs available within the U.S. and foreign countries.]

The Workforce Investment Act directs the Commission to issue recommendations to the President and Congress within six months. The Commission first met on November 16, 1999, and will issue its recommendations by May 16, 2000.

AGENDA: At the Fairfax, Virginia hearing, the Commission working group conducting the hearing will emphasize the following issues: (1) How will information technology advances continue to change Northern Virginia's economy in coming years, and what skills will individuals need to participate in the IT workforce? (2) How are Northern Virginia companies, educational institutions, community organizations, state and local governments partnering to provide educational and training opportunities for individuals who want to enter the IT workforce? (3) What particular barriers face Northern Virginia in building and strengthening the IT workforce, and how are under-represented populations being reached for participation in the IT workforce?

COMMISSION MEMBERSHIP: The Workforce Investment Act mandates that 15 voting members be appointed by the President, Majority Leader of the Senate, and Speaker of the House (5 members each), including 3 educators, 3 state and local government representatives, 8 business representatives and 1 labor representative. The Act also mandates that the President appoint 2 ex-officio members, one each from the Departments of Labor and Education.

The Commissioners are: Chairman Lawrence Perlman, Ceridian Corporation, Minneapolis, MN; Vice Chair, Katherine K. Clark, Landmark Systems Corporation, Reston, VA; Susan Auld, Capitol Strategies, Ltd., Montpelier, VT; Morton Bahr, Communication Workers of America, Washington, DC; Patricia Gallup, PC Communications, Inc., Merrimack, NH; Dr. Bobby Garvin, Mississippi Delta Community College, Moorhead, MS; Susan M. Green (ex officio), U.S. Department of Labor, Washington, DC; Randel Johnson, U.S. Chamber of Commerce, Washington, DC; Roger Knutsen, National Council for Higher Education, Auburn, WA; Patricia McNeil (ex officio), U.S. Department of Education, Washington, DC; The Honorable Mark Morial, Mayor, City of New Orleans, LA; Thomas Murrin, Duquesne University, Pittsburgh, PA; Leo Reynolds, Electronic Systems, Inc., Sioux Falls, SD; The Honorable Frank Riggs, National Homebuilders Institute, Washington, DC; The Honorable Frank Roberts, Mayor, City of Lancaster, California; Kenneth Saxe, Stambaugh-Ness, York, PA; David L. Steward, World Wide Technology, Inc., St. Louis, MO; Hans K. Meeder, Executive Director, Washington, DC.

PUBLIC PARTICIPATION: Members of the public are invited to attend this hearing. Several witnesses have been invited to testify by the Commissioners to address the questions identified on the Agenda. In addition, members of the public wishing to present oral statements to the Twenty-First Century Workforce Commission should forward their requests to Mr. Hans Meeder, Executive Director, as soon as possible and at least four days before the meeting. Requests should be made by email, fax machine, or telephone, as shown above.

Time permitting, the Commissioners will attempt to accommodate requests for oral presentations. Each member of the public who is selected to testify will be allotted a three minute period to present their oral remarks. Members of the public must limit oral statements to three minutes, but extended written statements may be submitted for the record. Members of the public may also submit written statements for distribution to the Commissioners and inclusion in the public record without presenting oral statements. Such written statements should be sent to Mr. Hans Meeder, as shown above, or may be submitted at the hearing site.

The Commission has established a web site, *www.workforce21.org.* Any written comments regarding documents published on this web site should be

directed to Mr. Hans Meeder, as shown above.

SPECIAL ACCOMMODATIONS: Reasonable accommodations will be available. Persons needing any special assistance such as sign language interpretation, or other special accommodation, are invited to contact Mr. Hans Meeder, as shown above. Requests for accommodations must be made four days in advance of the hearing.

Due to difficulties of scheduling the members we are unable to provide a full 15-day advance notice of this meeting.

Signed at Washington, DC this 16th day of March, 2000.

Hans K. Meeder,

Executive Director, Twenty-First Century Workforce Commission.

[FR Doc. 00–7114 Filed 3–21–00; 8:45 am]

BILLING CODE 4510–23–P

Federal Register

Wednesday,
March 22, 2000

Part II

Department of Health and Human Services

Office of Refugee Resettlement

45 CFR Parts 400 and 401

Refugee Resettlement Program: Requirements for Refugee Cash Assistance; and Refugee Medical Assistance; Final Rule

DEPARTMENT OF HEALTH AND HUMAN SERVICES

Office of Refugee Resettlement

45 CFR Part 400 and Part 401

RIN 0970–AB83

Refugee Resettlement Program; Requirements for Refugee Cash Assistance; and Refugee Medical Assistance

AGENCY: Office of Refugee Resettlement, Administration for Children and Families (ACF), HHS.

ACTION: Final rule.

SUMMARY: This rule amends current requirements governing refugee cash assistance and refugee medical assistance and provides States the option to establish the refugee cash assistance program as a public/private partnership between States and local resettlement agencies or to continue the refugee cash assistance program as a publicly-administered program.

A proposed rule was published in the **Federal Register** on January 8, 1999 (64 FR 1159). Some changes have been made and clarifications provided in this final regulation after consideration of the written comments received.

EFFECTIVE DATE: Effective April 21, 2000, except the amendments to 45 CFR 400.100 through 400.104 which are effective June 20, 2000.

FOR FURTHER INFORMATION CONTACT: Gayle Smith, (202) 205–3590.

SUPPLEMENTARY INFORMATION:

Background

The Refugee Act of 1980 amended the Immigration and Nationality Act (INA) to create a domestic refugee resettlement program to provide assistance and services to refugees resettling in the United States. With the enactment of this legislation, the Office of Refugee Resettlement (ORR) issued a series of regulations, at 45 CFR part 400, to establish comprehensive requirements for a State-administered Refugee Resettlement Program (RRP), beginning with the publication on September 9, 1980 (45 FR 59318) of a regulation governing State plan and reporting requirements. Subsequent regulations covered cash and medical assistance (CMA) and Federal funding, published March 12, 1982 (47 FR 10841); grants to States, child welfare services (including services to unaccompanied minors), and Federal funding for State expenditures, published January 30, 1986 (51 FR 3904); cash and medical assistance, requirements for employability services, job search, and employment, and refugee social services published February 3, 1989 (54 FR 5463); and requirements for employability services, job search, employment, refugee medical assistance (RMA), refugee social services, targeted assistance services, and Federal funding for administrative costs, published June 28, 1995 (60 FR 33584).

Discussion of Major Changes

The changes made in this final regulation, as compared with the proposed rule published on January 8, 1999, are as follows:

1. The proposal to require States to enter into a public/private partnership with local resettlement agencies has been revised. States will have the flexibility to establish a public/private refugee cash assistance (RCA) program with local resettlement agencies, operate a publicly-administered RCA program modeled after a State's Temporary Assistance for Needy Families (TANF) program, or establish an alternative approach under the existing Wilson/Fish program, which is authorized by section 412(e)(7) of the Immigration and Nationality Act (INA) (8 U.S.C. 1522(e)(7)).

2. Under § 400.57, States that elect to establish a public/private RCA program are only required to include counties and national voluntary agencies that resettle refugees in that State in the planning and consultation process. The requirement for public comments has been withdrawn.

3. Under § 400.60, States and local resettlement agencies that operate a public/private RCA program may combine RCA payments with employment incentives that exceed the monthly payment ceiling as long as the total combined payments to a refugee do not exceed the Federal monthly ceiling multiplied by the allowable number of months of RCA eligibility.

4. Under § 400.61, States will be able to contract with or award grants to any service provider for the provision of services to participants in the public/private RCA program. States will not be required to only contract with or award grants to local resettlement agencies to provide these services.

5. States must notify ORR within 6 months of the date of publication of the final rule as to whether they intend to establish a public/private RCA program. The due date for submission of a public/private RCA plan, however, has been extended to no later than 12 months after the date of publication of the final rule. States are to include in the RCA plan a proposed date for implementation of the public/private RCA program, not to exceed 24 months after the date of publication of the final rule.

6. The section on monitoring has been withdrawn.

7. The requirements in the current regulation that prohibit States from considering any resources remaining in the applicant's country of origin or from considering a sponsor's income and resources when determining eligibility for RCA have been restored. In addition, we have added a requirement that prohibits States from considering any cash grant provided to a refugee under the Department of State or Department of Justice Reception and Placement (R & P) programs when determining eligibility for RCA. These requirements will apply to both the public/private RCA program as well as publicly-administered RCA programs.

8. The proposed requirement for requesting an exception to the public/private RCA program has been withdrawn. A State that chooses to operate a publicly-administered RCA program modeled after its TANF program must submit an amendment to its State Plan to the Office of Refugee Resettlement for approval no later than 6 months after the date of publication of the final rule, describing the elements of its TANF program that will be used in its RCA program.

9. Under § 400.100(a), whether a refugee has been denied, or terminated from, refugee cash assistance may no longer be used as a criterion for determining that an applicant is ineligible for RMA.

10. Section 400.101 has been amended to extend to all States the option to establish an RMA financial eligibility standard at up to 200% of the national poverty level.

11. Section 400.102 has been amended by requiring that any cash assistance payments that a refugee receives may not be considered in determining eligibility for RMA.

12. Section 400.104 has been amended by making the transfer from Medicaid to RMA mandatory for refugees who lose Medicaid eligibility due to early employment.

13. Under § 400.152(b), citizenship and naturalization services are exempt from the 60-month limitation on services.

14. Section 400.55 has been amended to clarify that translations of written policies, notices, and determinations in refugee languages must be provided to recipients in both public/private RCA programs and publicly-administered RCA programs. We have amended this requirement in accordance with the Department of Justice's regulations

regarding compliance with title VI of the Civil Rights Act of 1964. This section now requires that agency policies, notices of eligibility and of adverse action, and determinations must be provided to refugees in English and in appropriate languages where a significant number or proportion of the recipient population needs information in a particular language. For refugee language groups that constitute a small number or proportion of the refugee recipient population, these provisions require States, or local resettlement agencies in the case of a public/private RCA program, to use an alternative method such as a verbal translation in a refugee's native language, to ensure that the content of the written policy or notice is effectively communicated.

15. The proposed amendment to 400.13(d) which would have allowed certain case management costs to be charged to CMA has been withdrawn.

Description of the Regulation

This rule provides States with options in designing a refugee cash assistance (RCA) program for those refugees not eligible for Temporary Assistance for Needy Families (TANF) or Supplemental Security Income (SSI), changes the procedure for determining the financial eligibility of refugees for receipt of refugee medical assistance (RMA), and amends other policies.

During the period following World War II until the passage of the Refugee Act of 1980, a variety of programs were funded by Congress and/or the private sector to assist newly arriving refugee groups. In authorizing and funding these programs for refugees, Congress continually demonstrated its recognition that special programs were needed to help refugees restart their lives in the U.S.

It is important to note that resettlement in the U.S. is the last stage of a much larger, world-wide humanitarian effort to aid victims of oppression and war. The U.S. participates and exercises its leadership in this effort by contributing to international relief and protection efforts, and also by offering resettlement to some refugees who have no other durable solution and who qualify for admission to the U.S. These refugees arrive from diverse backgrounds and parts of the world. However, what they all have in common, in addition to having had to seek refuge, is that they arrive with virtually no worldly possessions.

With the passage of the Refugee Act, Congress further underscored its belief that refugees need special assistance by authorizing an on-going program for providing assistance and services to all refugees after their arrival in the U.S. However, unlike U.S. welfare programs which assist the needy, the Refugee Act does not require that an income standard be met in order to receive this special refugee cash assistance, only that refugees register for and participate in programs to help them find employment. Congress provided the Office of Refugee Resettlement (ORR) the latitude to structure the refugee program in accordance with the refugee situation at that time.

After passage of the Refugee Act of 1980, ORR chose to establish direct ties to the State-administered Aid to Families with Dependent Children (AFDC) program in order to ensure that cash assistance was available to newly-arrived refugees not categorically eligible for that program. ORR established the refugee cash assistance program and required States to use the AFDC need and payment standards for the provision of RCA. The AFDC welfare system provided a nationally accessible structure which ensured that cash assistance was available to all refugees in a timely and equitable manner. ORR also established the refugee medical assistance program modeled on the Medicaid program.

At that time, ORR received sufficient appropriations to allow States to provide needy refugees with refugee cash assistance and refugee medical assistance during a refugee's first 36 months in the U.S. In addition, some portion of the refugee population received assistance under the mainstream AFDC and Medicaid programs. ORR also reimbursed the State share of AFDC and Medicaid costs during a refugee's first 36 months.

In the intervening years, due to declining appropriations, ORR reduced the period of availability of RCA and RMA to refugees. At the present time, ORR reimburses States for 100 percent of their RCA and RMA costs during a refugee's first eight months. Refugees eligible for the TANF and Medicaid programs receive assistance under those programs; the costs of providing TANF and Medicaid to refugee recipients are not included in the refugee appropriation.

With the passage of welfare reform legislation in 1996, two things have occurred which caused ORR to review the current system for providing RCA: (1) More refugee families have qualified for assistance through the TANF program than had previously qualified under the AFDC program, resulting in a smaller RCA program; and (2) States have expressed concerns about the administrative difficulties of maintaining a separate system based upon former AFDC rules to provide cash assistance for only 8 months to a small population of refugees.

With these two considerations in mind, ORR conducted eight consultations around the country and two teleconferences to discuss whether and how States, voluntary agencies, service providers, and refugee organizations would like to see the regulations changed. These consultations were attended by 35 State Refugee Coordinators, ten national voluntary agencies, more than one hundred local voluntary agency affiliates, representatives from State and local TANF agencies, local service providers, refugee mutual assistance agencies, unions, and national advocacy groups. The consultations were useful in helping us to identify certain issues and to gauge whether there was a general willingness and a suitable climate across the country in which to change the program.

We have concluded, based upon the consultations, that it is an opportune time to provide States the flexibility to separate the link between the RCA program and the welfare/TANF system for the following reasons: (1) The current period of time for provision of cash assistance is shorter, requiring a simple, more integrated and direct approach to resettlement; and (2) the RCA population, comprised almost entirely of singles and couples without children or with adult children, is a smaller, more distinct population to serve.

The Refugee Act acknowledged the roles of both States and private voluntary agencies in resettlement and authorized the Director of ORR ''to provide assistance, reimbursement to States, and grants to, and contracts with, public or private nonprofit agencies for 100 per centum of the cash assistance and medical assistance provided to any refugee * * *.'' This language provided ORR with statutory flexibility to deliver assistance through public or private means. We believe that the public/private program described in this regulation more closely follows what Congress intended in passing the Refugee Act. The addition of a public/private program also provides States increased flexibility by offering another option for administering the RCA program.

In addition to the public/private program, this rule also provides States the option to establish the refugee cash assistance program as a publicly-administered RCA program modeled after their TANF program in regard to determination of eligibility, treatment of

income and resources, benefit levels, and budgeting methods.

This rule provides States that elect to establish the refugee cash assistance program as a public/private partnership the option to enter into contracts with or award grants to local resettlement agencies to administer the provision of cash assistance or to administer both the provision of cash assistance and services needed to help RCA recipients become employed and self-sufficient within the RCA eligibility period. The RMA program will continue to be administered by the States and will not be included in the public/private partnership program. In addition, assistance and services to refugees eligible for TANF will not be affected by the public/private RCA program.

We believe that giving States an option of operating a combined assistance and services program, administered outside the welfare system, makes programmatic sense for the RCA population. Placing responsibility for cash assistance and services with the resettlement agencies will result in a continuity of assistance to RCA-eligible refugees from initial resettlement to self-sufficiency. Currently, resettlement agencies are responsible, under contract with the Department of State (DOS), for providing refugees with initial housing, food, clothes, and shelter for the first 30 days after arrival in the U.S. However, in order to receive cash assistance, refugees must apply to the local welfare office where they become engaged in a service delivery system which, in many States, may not include their local resettlement agency.

We believe a public/private RCA program will more firmly unite the two key players—States and resettlement agencies—into a partnership that will best utilize their respective strengths. States will maintain the important role of administering the program and providing financial management and policy oversight, while the resettlement agencies will have an enhanced role in the longer-term resettlement of refugees they place in the State. Under the public/private RCA program, States and voluntary agencies will have the flexibility to design programs to deliver refugee cash assistance in a manner that more fully integrates and supports resettlement. In order to accommodate resettlement in communities across the U.S. with different cost-of-living conditions, ORR is establishing payment ceilings which may be provided to refugees. Within these ceilings, a State and the resettlement agencies in that State will have the opportunity to develop a resettlement plan which incorporates the features, such as sliding scale payments or incentives, that they believe are best suited to achieving early self-sufficiency and to enriching the quality of life for refugees placed in their State. In addition, States and resettlement agencies will have the flexibility to establish the income-eligibility standard for RCA that they believe would best enable most newly arriving refugees to qualify for RCA and which would encourage early employment.

States and the agencies responsible for providing services to recipients in the public/private RCA program will be responsible for moving refugees to economic and social self-sufficiency within the RCA eligibility period by placing them in full-time employment.

This rule will allow States under § 400.207 to claim reasonable and necessary administrative costs incurred by resettlement agencies in the administration of the public/private RCA program.

We expect States that opt to establish a public/private RCA program, when developing their annual social services plan, to cover the costs of services in the new RCA program within their regular social services budget. We also expect States to link the new RCA program with the existing State refugee social services system in order to enhance the coordination of services. We recognize that there may be additional service costs to fully implement the service component of the new RCA program while maintaining the State's regular refugee social services program for non-RCA refugees who have been in the U.S. for less than 5 years. For this reason, subject to the availability of funds, ORR plans to make available to States a portion of the non-formula funds that are reserved for the Director's discretionary use each year. These non-formula funds would be used during the initial start-up years to enable States to establish a viable public/private RCA program without compromising their existing social services program.

States that elect to establish a public/private RCA program will be required to engage in a planning and consultation process with the national voluntary and local resettlement agencies and with other agencies, such as mutual assistance associations (MAAs), that serve refugees in the State to design the public/private RCA program. From that process, States and resettlement agencies will develop a public/private RCA plan for submission to ORR no later than 12 months after publication of the final rule.

While a public/private RCA program is ORR's preferred approach, we fully recognize that this approach may not be the best choice in all States. Therefore, under the final rule, States will have the option to establish a publicly-administered RCA program modeled after their TANF program. States that conclude that neither a public/private RCA program nor a publicly-administered RCA program would be the best way to serve refugees in their State may pursue a third option—an alternative program funded under the standing Wilson/Fish announcement. The Wilson/Fish program provides States and public and private non-profit agencies the opportunity to develop innovative approaches to providing cash assistance, social services, and case management as an alternative to the regular State-administered refugee program.

The final rule contains a number of provisions to ensure that refugee rights and protections are safeguarded in the RCA program. While we have no interest in having resettlement agencies adopt the full range of rules and regulations of a government bureaucracy, it is essential to have adequate client protections in place to ensure due process and equitable treatment.

We have added three changes to the refugee medical assistance program to enable certain groups of refugees currently without medical coverage, such as newly arrived refugees who become employed within the first few weeks of arrival, to be eligible for RMA. First, States will be required to determine RMA eligibility on the basis of a refugee applicant's income and resources on the date of application, rather than averaging income over the application processing period. Second, States will be given the option of using a higher financial eligibility standard of up to 200% of the national poverty level for determination of RMA eligibility. Third, refugees residing in the U.S. less than 8 months, who lose their eligibility for Medicaid because of earnings from employment, will be transferred to RMA without an eligibility determination. We believe these changes in RMA eligibility are important to ensure that most newly arriving refugees, many of whom arrive with medical problems resulting from war-related trauma, have medical coverage during their first 8 months in the U.S.

Consistent with the preceding actions, 45 CFR 400.2, 400.5, 400.11, 400.13, 400.23, 400.27, 400.43, 400.44, Subpart E, 400.70, 400.71, 400.72, 400.75, 400.76, 400.77, 400.78, 400.79, 400.80, 400.81, 400.82, 400.83, 400.93, 400.94, 400.100, 400.101, 400.102, 400.103, 400.104, 400.107, 400.152, 400.154,

400.155, 400.203, 400.207, 400.208, 400.209, 400.210, 400.211, 400.301, and 401.12 are being amended or removed. Some of these changes are technical in nature and are not discussed in the preamble.

Subpart A—Introduction

Section 400.2 is amended by replacing all references to the AFDC program with references to the TANF program, by adding a definition of an RCA Plan, designee, economic self-sufficiency, and a family unit, and by adding separate definitions of a national voluntary agency and a local resettlement agency.

Subpart B—Grants to States for Refugee Resettlement

Section 400.5 is amended by reinserting paragraph (i) which was inadvertently removed when 45 CFR Part 400 was last codified in 1995.

Section 400.13 is amended by adding a new paragraph (e) which would allow States to charge administrative costs incurred by local resettlement agencies in the administration of the public/private RCA program (*i.e.,* administrative costs of providing cash assistance) to the CMA grant. Administrative costs of managing the services component of the RCA program must continue to be charged to the social services grant.

Administrative costs of providing cash assistance may include: (1) The salary costs of staff responsible for eligibility determinations and other administrative functions associated with the provision of cash payments; and (2) the portion of the local resettlement agency Director's time spent on managing the cash assistance component.

Subpart C—General Administration

Section 400.23 (Hearings) is amended by clarifying that the public assistance hearing regulation at 45 CFR 205.10(a) applies to assistance and services provided to refugees unless otherwise specified in ORR regulations.

Section 400.27 (Safeguarding and sharing of information) is amended by adding language to paragraph (b) to enable States that have established a public/private RCA program to obtain client information from local resettlement agencies without a signed consent from clients, and by removing paragraph (c) which references an AFDC regulation. It should be noted that § 400.58 requires that a State's public/private RCA plan contain a description of the procedures to be used to safeguard the disclosure of information regarding refugee clients.

Subpart D—Immigration Status and Identification of Refugees

Section 400.43 is amended by removing the following obsolete alien statuses for purposes of the refugee program: ''Admitted as a conditional entrant under section 203(a)(7) of the Act'' and ''Admitted with an immigration status that entitled the individual to refugee assistance prior to enactment of the Refugee Act of 1980, as specified by the Director'' and by adding Cuban and Haitian entrants in accordance with requirements in Part 401; and Amerasian immigrants to this section.

Section 400.44 is amended by clarifying that applicants for asylum are not eligible for assistance under the refugee program unless otherwise provided by Federal law, as is the case with Cuban and Haitian asylum applicants under section 501 of the Refugee Education Assistance Act of 1980.

Subpart E—Refugee Cash Assistance

The sections of Subpart E that pertain specifically to AFDC requirements have been retained and modified under a new § 400.45. For example, we have dropped the prohibition against applying a $30 and ⅓ earned income disregard; any reception and placement cash received by a refugee may not be considered in determining income eligibility; and the State agency may use the date of application as the date RCA begins. These requirements must be followed by States until they have implemented a new public/private RCA program or a publicly-administered RCA program modeled after TANF. These requirements also apply to those States that obtain an approved waiver from ORR to continue an AFDC-type RCA program.

Subpart E is revised by providing States the flexibility to establish a new public/private partnership program in which States would contract with or award grants to local resettlement agencies to provide transitional cash assistance and services to RCA-eligible refugees as described below, or to operate a publicly-administered RCA program modeled after the TANF program.

General

The following general sections apply to both the public/private RCA program and publicly-administered RCA programs, including RCA programs currently modeled after AFDC unless otherwise noted in § 400.45.

Section 400.50 (Basis and scope) is retained without changes and redesignated as § 400.48.

Section 400.51 (Definitions) is removed.

Section 400.52 (Recovery of overpayments and correction of underpayments) is redesignated as § 400.49 and amended by removing references to AFDC requirements.

Section 400.55 (Opportunity to apply for cash assistance) is redesignated as § 400.50 and amended by removing (b)(1), which references AFDC requirements, by amending (b)(2), and by removing (b)(3), (b)(4), and (c), which require States to contact sponsoring resettlement agencies regarding financial assistance and offers of employment to refugees. Paragraph (b)(4) and (c) have been moved to § 400.68. Paragraph (d) has been removed and moved to § 400.54.

This section is amended by adding a requirement that an eligibility determination must be made as promptly as possible within no more than 30 days from the date of application and that applicants must be informed of their rights and responsibilities.

Section 400.56 (Determination of eligibility under other programs) is redesignated as § 400.51 and is amended by removing paragraphs (a)(1) and (a)(2) and redesignating paragraph (a)(3) as (a).

Section 400.57 (Emergency cash assistance to refugees) is redesignated as § 400.52.

Section 400.53 (General eligibility requirements) replaces § 400.60 and establishes the following eligibility requirements for the RCA program. To be eligible for the RCA program, a refugee must: (1) Be a new arrival who has resided in the U.S. less than the RCA eligibility period determined by the ORR Director in accordance with § 400.211; (2) be ineligible for TANF and SSI; (3) have the proper immigration status and documentation for eligibility for benefits under the refugee program; (4) not be a full-time student in an institution of higher education; and (5) meet the income eligibility standard established by the State.

Section 400.54 (Eligibility redeterminations in States with residency requirements) has been removed and a new § 400.54 (Notice and hearings) has been added. This section describes timely and adequate notice and certain hearing requirements necessary in the administration of public/private and publicly-administered RCA programs (*See* the comment and response sections to §§ 400.82 and 400.83 for further discussion).

Section 400.55 (Availability of agency policies) requires a State or the

agency(s) responsible for the provision of RCA to make available to refugees the written policies of the public/private RCA program, including all notices and all agency policies regarding eligibility standards, the duration and amount of cash assistance payments, the requirements for participation in services, the penalties for non-cooperation, and client rights and responsibilities to ensure that refugees understand what they are eligible for, what is expected of them, and what protections are available to them. The State or the agency(s) responsible for the provision of RCA must ensure that agency policy materials and notices, including notices required in §§ 400.54, 400.82, and 400.83 are made available to refugee clients in English and in appropriate languages where a significant number or proportion of the recipient population needs information in a particular language.

Public/Private Partnership RCA Program

Section 400.56 (Structure) provides States the option of entering into a partnership with local resettlement agencies for the provision of cash assistance through a public/private RCA program. This section provides States the flexibility to enter into a public/private partnership by administering the RCA program through contracts or grants with the local resettlement agencies that resettle refugees in the State. We define local resettlement agencies in § 400.2 as local affiliate agencies which provide initial reception and placement services to refugees under a cooperative agreement with the Department of State.

We believe that giving the local resettlement agencies that are responsible for the initial placement of refugees the additional responsibility of providing cash assistance to those refugees will result in more effective and better quality resettlement. At the same time, we fully recognize the policy and administrative oversight capacity that States are able to contribute to the resettlement process. This public/private structure is a way to more firmly unite the two sectors into a partnership to help refugees.

We expect States to implement a public/private RCA program statewide. It is intended that all resettlement agencies placing refugees in a State will participate in the public/private RCA program to the extent possible.

However, if it is not feasible to operate a statewide public/private RCA program, States may propose a geographically split program for the delivery of RCA. We recognize that in some places the statewide public/private model may not be a reasonable approach. For example, in a State with a major urban area that receives 75% of the State's newly arriving refugees, the State and resettlement agencies may wish to operate a public/private RCA program in the urban area only, while choosing to operate a publicly-administered RCA program through the State welfare agency in the balance of the State where the geographic dispersion of refugees may hinder resettlement agency delivery of benefits.

ORR will not consider a plan where the State proposes having both a public/private RCA program and a publicly-administered RCA program in the same location. Such an arrangement would not be programmatically wise because it would cause confusion for refugees and would create unnecessary duplication.

We recognize that some local resettlement agencies sponsor refugees in States other than where they have an office, e.g., in States bordering and in close proximity to their local office such as occurs in Kansas/Missouri and in the District of Columbia/Maryland/Virginia metropolitan area. ORR intends, where possible, that these resettlement agencies also be involved in the planning of the public/private RCA plan of the bordering State. However, if that is not feasible (some States, for example, may not be able to enter into contracts or grants outside of the State), ORR expects States, in conjunction with the local resettlement agencies, to make appropriate provisions for eligible refugees resettled by agencies not located within State boundaries. Examples of appropriate provisions may include the establishment of an office by the sponsoring resettlement agency in the State where they are placing refugees or co-locating staff with a resettlement agency that already has a presence in the State.

We recognize that some States may not have the staff or administrative support to contract with and manage numerous local agency contracts or grants. We also recognize that some local resettlement agencies may not have the administrative and fiscal capacity to manage a cash assistance program. Therefore, under the public/private RCA plan, States and local resettlement agencies may consider different types of arrangements such as: (1) An agency-contained model where the local resettlement agency performs all fiscal and eligibility functions including the determination of eligibility, authorization of the RCA payment amount, the cutting of the checks, and the provision of payments to refugees; (2) a lead agency approach in which one resettlement agency assumes responsibility for managing the cash assistance component of the program for all the resettlement agencies; or (3) a model where the State acts as the fiscal agent, cutting benefit checks and managing cash flow, while the local resettlement agency determines eligibility, calculates the payment amount, and provides payments to refugees.

States and resettlement agencies that choose to implement the public/private RCA program will have 24 months from the date of publication of the final rule to implement the new program.

Section 400.57 (Planning and consultation) requires a State that wishes to establish a public/private RCA program to engage in a planning and consultation process with local resettlement agencies to develop a public/private RCA plan, the content of which is described in § 400.58. Primary participants in the planning process must include representatives of the State and each local agency that resettles refugees in the State. In addition, representatives of refugee mutual assistance associations (MAAs), counties, local community services agencies, national voluntary agencies, representatives of each refugee ethnic group, and other agencies that serve refugees must be given the opportunity to participate in the discussion during the development period. We believe that full participation by MAAs and other community agencies throughout the planning process is essential to the development of a workable public/private RCA program. To facilitate this participation, it is permissible for States to charge to their CMA grant reasonable travel and per diem costs for MAAs and other agencies, as needed, to enable these agencies to more easily participate in the consultation process.

This section requires local resettlement agencies to keep their respective national voluntary resettlement agencies fully informed of the details of the public/private RCA program as the program is developed. Local resettlement agencies will be responsible for obtaining a letter of agreement from their national agency stating that the national agency supports the public/private RCA plan and will continue to place refugees in the State under the new public/private program.

Section 400.58 (Development of a public/private RCA plan) establishes the requirements for the development of a public/private RCA plan which describes how the State and local resettlement agencies will administer and deliver RCA to eligible refugees. The plan must describe the agreed-upon public/private RCA system including:

(1) The proposed income standards for RCA eligibility; (2) proposed payment levels to be used to provide cash assistance to eligible refugees; (3) assurance that the payment levels established are not lower than the State TANF amount; (4) a detailed description of how benefit payments will be structured, including the employment incentives and/or income disregards to be used, if any, as well as methods of payment; (5) a description of how all refugees residing in the State will have reasonable access to cash assistance and services; (6) a description of the procedures to be used to ensure appropriate protections and due process for refugees, such as notice of adverse action and the right to mediation, a pre-termination hearing, and an appeal to an independent entity; (7) a description of proposed exemptions from participation in employability services; (8) a description of the employment and self-sufficiency services that will be provided to RCA recipients; (9) procedures for providing RCA to eligible secondary migrants who move to the State, including secondary migrants who were sponsored by a resettlement agency that does not have a presence in the receiving State; (10) if applicable, provisions for providing assistance to refugees resettling in the State who are sponsored by a resettlement agency in a bordering State which does not have an office in the State of resettlement; (11) a description of the procedures to be used to safeguard the disclosure of information on refugee clients; (12) letters of agreement from the national voluntary resettlement agencies indicating support for the public/private RCA program and that refugee placements in the State will continue under the public/private RCA program; (13) a breakdown of the proposed program and administrative costs of both the cash assistance and service components of the public/private RCA program, including per capita caps on administrative costs only if a State proposes to use such caps; and (14) a proposed implementation date for the public/private RCA program.

The plan must be signed by the Governor or his or her designee and must be submitted to the ORR Director for review and approval no later than 12 months after the date of publication of the final rule. A State must, however, notify the ORR Director of its intent to establish a public/private RCA program no later than 6 months after the date of publication of the final rule.

RCA plan amendments must be developed in consultation with the local resettlement agencies to reflect any changes in policy and submitted to ORR in accordance with § 400.8.

Section 400.59 (Eligibility for the public/private RCA program) establishes that to be eligible for the public/private RCA program, a refugee must meet the income eligibility standard jointly established by the State and local resettlement agencies in the State. This section also states that any resources remaining in the applicant's country of origin or a sponsor's income and resources may not be considered in determining income eligibility. Any cash grant received by the applicant under the Department of State or Department of Justice Reception and Placement programs also may not be considered in determining income eligibility since such a grant is intended to cover the initial costs of resettlement, not ongoing living expenses.

In establishing an income eligibility standard for the public/private RCA program, States and resettlement agencies may wish to set a standard, for example, at 150% of the poverty level, that will allow refugees who are employed part-time in a low wage job to also be eligible for some level of cash assistance. States may wish to consider such a need standard in order to provide a more solid economic foundation for refugees during their first 8 months in the U.S. to better ensure continued self-sufficiency.

Section 400.60 (Cash payment levels) establishes allowable cash payment levels under the public/private RCA program. This section requires monthly cash assistance payments to be made to eligible refugees using a payment level that does not exceed the following payment ceilings, except in cases where the State TANF payment level is higher or a State wishes to provide early employment incentives as described below.

Size of family unit	Monthly payment ceiling
1 person	$335
2 persons	450
3 persons	570
4 persons	685

These ceiling payment levels are based on 50% of the 1998 HHS Poverty Guidelines for each family size, divided by 12 months, except as noted below.

For family units greater than 4 persons, the payment ceiling may be increased by $70 for each additional person.

If the ORR Director determines that the payment ceilings need to be adjusted for inflation, ORR will issue revised payment ceilings through a notice in the **Federal Register**.

We expect that most refugees eligible for RCA will be one-person or two-person family units, singles and childless couples. We expect that most refugee families with dependent children will be eligible for TANF and, therefore, will not need to access the RCA program.

Payments to refugees may not be lower than the State TANF payment for the same sized family unit. States, therefore, that have TANF payment levels that are higher than the ceilings indicated above, must provide payment levels under the new public/private RCA program that are comparable to the State TANF payment levels. ORR will reimburse States at the higher TANF payment levels in such instances.

We encourage States and local resettlement agencies to use the flexibility provided in the payment ceilings to include income disregards or other incentives such as employment bonuses, that will encourage early employment and self-sufficiency. This flexibility would allow States and local resettlement agencies to provide continued cash support while moving refugees into early employment. States and local resettlement agencies may design whatever combination of assistance payments and incentives they believe would be effective, as long as the total combined payments to a refugee do not exceed the monthly ceiling multiplied by the allowable number of months of RCA eligibility. States and local resettlement agencies that plan to exceed the monthly payment ceilings in order to provide employment incentives must budget their resources carefully to ensure that sufficient RCA funds are available to cover a refugee's cash assistance needs in the latter months of a refugee's eligibility period, if needed.

We encourage States and local resettlement agencies to look at different approaches and to be creative in designing a program that will help refugees to establish a good economic foundation during the 8-month RCA period. We encourage States and local resettlement agencies to design an RCA program that takes into account that refugees arrive in the U.S. with little or no financial resources and that 8 months of cash assistance provides a limited period of time to gain a degree of financial stability.

One approach might be to permit the total of earned income and cash assistance of refugees who become employed full-time to exceed the cash assistance only payments made to refugees who are not employed. Another

approach, currently being used in one State, provides an incentive to employed refugees through monthly reimbursements for work-related expenses such as tools, uniforms, work-related transportation expenses, medical insurance co-payments, or the cost of additional work-related training. The State has found this to be an effective incentive for early employment.

Section 400.61 (Services in the public/private RCA program) establishes that services provided to recipients of refugee cash assistance in the public/private program may be provided by the local resettlement agencies that administer the public/private RCA program or by other refugee service agencies. It will be important not only to place refugees in employment at wages that will enable self-support, but to ensure that refugees receive the skills, such as English language acquisition and basic living skills, needed to live successfully in this country. We plan to work with States and resettlement agencies to develop appropriate social self-sufficiency and English acquisition outcome measures.

This section also establishes that in public/private RCA programs where local resettlement agencies are responsible for administering both cash assistance and services, States and local resettlement agencies must maintain ongoing coordination with refugee mutual assistance associations and other ethnic representatives that represent or serve the ethnic populations that are being resettled in the U.S. to ensure that the services provided under the public/private RCA program: (1) Are appropriate to the linguistic and cultural needs of the incoming populations; and (2) are coordinated with the longer-term resettlement services frequently provided by ethnic community organizations after the 8-month RCA period.

In public/private RCA programs where the agencies responsible for providing services to RCA recipients are not the same agencies that administer the cash assistance program, States must: (1) Establish procedures to ensure close coordination between the local resettlement agencies that provide cash assistance and the agencies that provide services to RCA recipients; and (2) set up a system of accountability that identifies the responsibilities of each participating agency and holds these agencies accountable for the results of the program components for which they are responsible.

Allowable services under the public/private program are limited to those services described under §§ 400.154 and 400.155.

Section 400.62 (Coverage of secondary migrants, asylees, and Cuban/Haitian entrants) provides that the State and local resettlement agencies must ensure that there is a system in place which is accessible to eligible secondary migrant refugees, asylees, and Cuban/Haitian entrants who want to apply for assistance. In developing these procedures, consideration must be given to how to ensure coverage of eligible secondary migrants and other eligible applicants who were sponsored by a resettlement agency which does not have a presence in the State or who were not sponsored by any agency.

Section 400.63 (Preparation of local resettlement agencies) requires national voluntary agencies to be responsible, in concert with the States, in preparing local resettlement agencies for their new responsibilities under the public/private RCA program during a period of transition. In light of the ongoing relationship of the national voluntary agencies with their local affiliates under the Department of State cooperative agreements for initial Reception and Placement services, we believe the national agencies should share in the responsibility with the States for ensuring that their affiliate agencies have the capacity and structure to effectively handle the cash assistance and service needs of refugees over an 8-month period.

The States and national voluntary agencies will develop a plan for: (1) Determining the training needed to enable local resettlement agencies to achieve a smooth transition into their expanded role; and (2) providing the training in a uniform way to ensure that all local resettlement agencies in the State will implement the new program in a consistent manner. Part of this training should involve helping the local resettlement agencies to change how they view their role—from a short-term initial resettlement role to a longer-term commitment to the economic self-sufficiency and social integration of the refugees they resettle. The national voluntary agencies should also be instrumental in helping the local resettlement agencies to establish a smooth linkage between Reception and Placement services and services under the RCA program and in facilitating the development of consortia among affiliates. States may also wish to call upon the national voluntary agencies to assist in providing remedial assistance and training to poorly performing affiliate agencies before contract or grant sanctions are applied.

ORR intends to use a portion of its non-formula social services funding, subject to the availability of appropriated funds, to support the national voluntary agencies in these training activities during a transition period ending two years after publication of the final rule.

Publicly-Administered RCA Programs

Section 400.65 (Continuation of a publicly-administered RCA program) provides a State that does not elect to establish a public/private RCA program the option of operating its RCA program consistent with its TANF program. A State that chooses to operate a TANF-type RCA program must submit an amendment to its State Plan no later than 6 months after publication of the final rule, describing the elements of its TANF program that will be used in its RCA program.

Section 400.66 (Eligibility and payment levels in a publicly-administered RCA program) establishes that in administering an RCA program modeled after TANF, the State agency must operate its refugee cash assistance program consistent with the provisions of its TANF program in regard to: (1) The determination of initial and on-going eligibility (treatment of income and resources, budgeting methods, need standard); (2) the determination of benefit amounts (payment levels based on size of the assistance unit, income disregards); (3) proration of shelter, utilities, and similar needs; and (4) any other State TANF rules relating to financial eligibility and payments.

This section retains the requirements that a State agency may not consider any resources remaining in the applicant's country of origin or a sponsor's income and resources in determining income eligibility. This section contains an additional requirement that a State agency may not consider any cash grant provided to the applicant under the Department of State or Department of Justice Reception and Placement programs in determining income eligibility. This section also permits States to use the date of application as the date refugee cash assistance begins, instead of the date used in the States' TANF program.

Section 400.67 (Non-applicable TANF requirements) establishes that a State that chooses to model its RCA program after its TANF program *may not* apply certain TANF requirements to refugee cash assistance applicants or recipients as follows: Instead of TANF work requirements, States must apply the requirements in § 400.75 which requires RCA recipients, as a condition of receipt of assistance, to participate in employment services within 30 days of receipt of aid, and Subpart I of 45 CFR Part 400 with respect to the provision of

services for RCA recipients. The requirements and expectations for employment and participation in employment services in the refugee program are no less serious than the requirements in the TANF program. The requirements in the refugee program are simply different from TANF requirements in that the types of activities allowed in the refugee program are designed for the needs of newly-arrived refugees who typically arrive with little or no English language skills. Thus, in the refugee program, refugees participate extensively in English language training, assisted job search, and other employment-related activities that are designed to help limited-English speaking refugees to become self-sufficient within 8 months.

Section 400.68 (Notification of resettlement agencies) requires States: (a) To notify the local agency that was responsible for the initial resettlement of a refugee whenever the refugee applies for refugee cash assistance under a publicly-administered RCA program; and (b) to contact the applicant's sponsor or resettlement agency to inquire whether the applicant has voluntarily quit employment or has refused to accept an offer of employment within 30 consecutive days immediately prior to the date of application, in accordance with § 400.77.

Section 400.69 (Alternative RCA programs) provides States, that determine that neither a public/private RCA program nor a publicly-administered program modeled after its TANF program is the best approach for their State, the option to establish an alternative approach under the Wilson/Fish program, authorized by section 412(e)(7) of the INA. Applications for the Wilson/Fish program may be submitted under the standing Wilson/Fish grant announcement published in the **Federal Register** on April 22, 1999 (64 FR 19793).

Subpart F—Requirements for Employability Services and Employment

Section 400.70 (Basis and scope) is amended to clarify that Subpart F applies to applicants and recipients of both a public/private RCA program and a publicly-administered RCA program.

Section 400.72 (Arrangements for employability services) is amended to clarify that the requirements in paragraphs (a) and (b) of this section apply equally to States that operate a public/private RCA program through contracts or grants with local resettlement agencies and to States that operate a publicly-administered RCA program, while paragraph (c) applies only to a publicly-administered RCA program.

Section 400.76 (Exemptions) is revised by removing the list of individuals who may be exempt from participation in employment services. States agencies may determine what specific exemptions, if any, are appropriate for recipients of a time-limited RCA program in their State. Given the short duration of the RCA program, however, and the need for refugees to become self-sufficient within this limited time frame, we would expect States to require most RCA recipients to participate in employment services, with few exceptions.

Section 400.78 (Service requirements for employed recipients of refugee cash assistance), which requires an RCA recipient who is employed less than 30 hours a week to participate in part-time employment services, as a condition of continued receipt of refugee cash assistance, is removed and reserved. We leave it to States and local resettlement agencies to determine how best to design a program that moves refugees to full-time employment in a reasonable period of time.

Section 400.80 (Job search requirements), which requires job search where appropriate, is removed and reserved. Again, we leave it to the judgement of States and local resettlement agencies to decide the types of employment services that are the most effective in placing refugees in jobs.

Section 400.81(a) (Criteria for appropriate employability services and employment) is amended by replacing the reference to AFDC with a reference to TANF.

Section 400.81(b) is amended by limiting professional refresher training and other recertification services only to individuals who are working.

Section 400.82 (Failure or refusal to accept employability services or employment) is revised to specify requirements for timely and adequate notice of intended termination under both a public/private RCA program and a publicly-administered RCA program.

Section 400.83 (Conciliation and fair hearings) is revised by establishing requirements for mediation and fair hearings in the public/private RCA program and requiring that States specify the public agency mediation/conciliation and fair hearings procedures to be used in cases where a State operates a publicly-administered RCA program. Under this requirement, hearings must meet the due process standards set forth in the U.S. Supreme Court decision in *Goldberg* v. *Kelly,* 397 U.S. 254 (1970).

Subpart G—Refugee Medical Assistance

This subpart is amended in several places to clarify that refugee medical assistance is only available to refugees who are ineligible for Medicaid or SCHIP, regardless of how the State has administratively implemented its SCHIP program. Without these clarifying amendments, the regulations as currently drafted would only require States to determine SCHIP eligibility prior to RMA eligibility if the State has administratively implemented SCHIP as an expansion of benefits under the State's Medicaid Plan under title XIX of the Social Security Act. As currently written, the RMA regulations do not require States to make SCHIP eligibility determinations prior to RMA eligibility determinations for refugee children, if the State has chosen to implement its SCHIP program as a separate State SCHIP Program pursuant to title XXI of the SSA.

Section 400.93 (Opportunity to apply for medical assistance) is amended to clarify that the notice indicating that assistance has been authorized, denied or terminated must clearly distinguish between RMA, Medicaid and SCHIP.

Section 400.94 (Determination of eligibility for Medicaid) is amended to clarify that refugee medical assistance is only available to refugees who are ineligible for Medicaid or SCHIP.

Section 400.100(a) (General eligibility requirements) is amended by removing the prohibition against the provision of RMA to refugees who have been denied, or terminated from, refugee cash assistance.

Sections 400.100(a)(1) and (d) (General eligibility requirements) are amended by clarifying that refugee medical assistance is only available to refugees who are ineligible for Medicaid or SCHIP.

Section 400.101 (Financial eligibility standards) is amended by giving all States the option of increasing the financial eligibility standard for RMA eligibility determination to up to 200% of the national poverty level by family size. Our intent in allowing States this new option is to ensure that States have the flexibility to broaden financial eligibility for refugee medical assistance, while receiving 100% Federal reimbursement of costs, in order to extend coverage to certain groups of new arrivals who are currently not covered under RMA. Refugees currently without medical coverage who would be affected by this provision include: (1) Refugees who are ineligible for transitional Medicaid because they were not considered eligible to receive AFDC assistance in at least 3 of the last 6

months due to hours of or income from employment; and (2) refugee spouses who arrive in the U.S. a number of months after their spouse who preceded them, and are not eligible for RMA because their employed spouse's income renders them ineligible for RMA.

Section 400.101(b) is amended with respect to States without a medically needy program by clarifying that references to AFDC refer to the AFDC payment standards and methodologies in effect as of July 16, 1996, including any modifications elected by the State under Section 1931(b)(2) of the Social Security Act (SSA). This is in keeping with the amendments made by section 114 of the Personal Responsibility and Work Opportunity Reconciliation Act of 1996 (PRWORA) to Section 1931 of the SSA.

Section 400.102 (Consideration of income and resources) is revised to clarify that determination of eligibility for refugee medical assistance (RMA) must be based on the applicant's income and resources on the date of application, rather than on a refugee's income averaged prospectively over the RMA application processing period.

The purpose of this revision is to ensure that refugees who enter employment within the first few weeks after arrival in the U.S. are not penalized for accepting early employment by denial of refugee medical assistance. Refugees arrive in the U.S. with no income, and generally apply for refugee medical assistance very soon after arrival. With this revision, a newly arrived refugee who applies for refugee medical assistance soon after arrival and becomes employed within the first 30 days in the U.S. subsequent to filing the RMA application, would not lose RMA eligibility.

Section 400.102 is also amended to prohibit the consideration of any cash assistance payments received by a refugee in determining a refugee's eligibility for RMA.

Section 400.102 is amended to remove references to the AFDC program which no longer apply due to changes in Medicaid eligibility determinations contained in PRWORA as described above.

Section 400.103 (Coverage of refugees who spend down to State financial eligibility standards) is amended to clarify that all States must allow applicants of RMA who do not meet the financial eligibility standards elected in § 400.101 to spend down to the elected standard.

Section 400.104 (Continued coverage of recipients who receive increased earnings from employment) is amended to require refugees residing in the U.S. less than 8 months, who lose their eligibility for Medicaid because of earnings from employment, to be transferred to refugee medical assistance without an RMA eligibility determination. This amendment will allow refugees who lose Medicaid eligibility because they obtain early employment to maintain medical coverage under RMA during the remainder of their first 8 months in the U.S. The purpose of this amendment is to encourage early economic self-sufficiency by ensuring that refugees receive continued medical assistance while employed and by ensuring that refugees are not discouraged from early employment by the potential loss of medical coverage.

Subpart I—Refugee Social Services

Section 400.152(b) (Limitations on eligibility for services) is amended by adding citizenship and naturalization services to the services that are exempt from the 60-month limitation.

Sections 400.154 (Employability services) is amended by adding assistance in obtaining employment authorization documents (EADs) as an allowable employability service under the social services and targeted assistance formula programs. This provision will allow States to use service funds to cover the cost of refugee provider staff time to help asylees or refugees obtain EADs. Social services and targeted assistance funds, however, may not be used to pay for the cost of EADs.

Section 400.155 (Other services) is amended by adding citizenship and naturalization services as allowable services under the social services and targeted assistance formula programs. Citizenship and naturalization services may include such services as English language training and civics instruction to prepare refugees for citizenship, application assistance for adjustment to legal permanent resident status and citizenship status, assistance to disabled refugees in obtaining disability waivers from English and civics requirements for naturalization, and the provision of interpreter services for the citizenship interview, as needed.

Subpart J—Federal Funding

Section 400.207 (Federal funding for administrative costs) is amended by clarifying that a State may claim reasonable and necessary administrative costs incurred by local resettlement agencies in the administration of a public/private RCA program.

Section 400.210 (Time limits for obligating and expending funds and for filing State claims) is amended by revising § 400.210(b)(2) to extend the due date for a State's final financial report of expenditures of social services and targeted assistance formula grants to no later than 90 days after the end of the two-year expenditure period. This section clarifies that States must expend their social services and targeted assistance funds no later than two years after the end of the Federal fiscal year in which the Department awarded the grant. Thus, under this revision, States must have expended social services and targeted assistance funds awarded to them in FY 1999, for example, by no later than September 30, 2001, and a State's final financial report must be *received* no later than December 31, 2001. If, at that time, a State's final financial report has not been received, the Department will deobligate any unexpended funds, including any unliquidated obligations, on the basis of a State's last submitted financial report.

This revision is in response to requests from several States needing a full 2-year period to expend social services and targeted assistance funds from the end of the Federal fiscal year in which the funds are awarded.

Section 211(a) (Methodology to be used to determine time-eligibility of refugees) is amended to clarify that after making a determination of the RCA/RMA eligibility period as soon as possible after funds are appropriated for the refugee program, the Director will make redeterminations at subsequent points during the year only if a reduction in the eligibility period appears indicated.

Subpart K—Waivers and Withdrawals

Section 400.301 (Withdrawal from the refugee program) is amended by removing the words ''only under extraordinary circumstances and'' in § 400.301(b). This would allow the ORR Director greater discretion to approve cases in which a State wishes to retain responsibility for only part of the refugee program if it is in the best interest of the Government, without requiring extraordinary circumstances. For example, when a State with a small refugee population wishes to drop out of the refugee program, but is willing to retain responsibility for administering just the RMA program, it would be in the best interest of the Government to approve such an arrangement without other constraints.

Section 400.301(c) is amended by clarifying that a replacement designee must adhere to the regulations regarding the targeted assistance formula program

under Subpart L if the State wishing to drop out of the refugee program authorizes the replacement designee appointed by the ORR Director to act as the State's agent in applying for and receiving targeted assistance funds.

Discussion of Comments Received

We received one hundred and thirty-six letters of comments in response to the notice of proposed rulemaking published in the **Federal Register** on January 8, 1999. The commenters included State and local governments, national and local voluntary agencies, refugee mutual assistance organizations, refugee service providers, advocacy organizations, national unions, national government organizations, and national public policy organizations. We took these comments into consideration in the development of the final rule. We have summarized and responded to the comments below. Some of the comments addressed existing provisions of the regulations that were not included in the NPRM for change. While we have reviewed these comments as well, we have included a discussion of comments only on those provisions outside of the NPRM that we have decided to change as a result of the comments.

Comments on Subpart A—Introduction

Section 400.2

Comment: Three commenters recommended defining TANF assistance as TANF cash assistance since there are other types of assistance which States may provide with TANF funds. One commenter recommended that the definition of TANF should include a reference to title IV–A of the Social Security Act.

One commenter recommended that the final rule define the term ''family unit'' to ensure consistency of interpretation for cash assistance payment cases. The issue of whether adult children are considered part of their parents' ''family unit'' or as separate family units or whether two unmarried adults living together are considered to be one or two family units needs clarification.

One commenter suggested adding a definition of economic self-sufficiency to § 400.2. The commenter recommended defining economic self-sufficiency on the basis of total household income in relation to a percentage of the Federal poverty standard. The commenter felt that the measure of hours of work per week should be eliminated as a measure of self-sufficiency and that agency performance should not be evaluated on the basis of whether each refugee meets the hours of work per week standard.

Response: The final rule includes the technical changes to the definition of TANF that were recommended by the commenters. We have included a definition of family unit as requested. We define a family unit as an individual adult, married individuals without children, or parents, or custodial relatives, with minor children who are not eligible for TANF. With respect to the question of whether two unmarried adults living together are considered to be one or two family units, we regard such a living arrangement to constitute two family units. We have also included a definition of economic self-sufficiency which we have defined as earning a total family income at a level that enables a family unit to support itself without receipt of a cash assistance grant. Regarding the elimination of hours worked per week as a measure of self-sufficiency, we view hours worked per week as a useful measure of employment, not self-sufficiency, which should not be eliminated. We require States and other major grantees to report client outcomes that include self-sufficiency (sufficient earnings to terminate cash assistance), which is the ultimate measure, and full-time and part-time employment, which are interim measures leading to self-sufficiency. These measures are important in tracking refugee progress towards economic self-sufficiency.

Comments on Subpart B—Grants to States for Refugee Resettlement

Section 400.8

Comment: One commenter asked for clarification on the relationship between the State Plan and amendments to the public/private RCA plan.

Response: The public/private RCA plan, once it is reviewed and approved by ORR, becomes part of the larger State Plan that is required in § 400.4 and replaces the existing RCA section of the State Plan. An amendment to the public/private RCA plan should be treated as an amendment to the State Plan.

Section 400.11

Comment: One commenter felt this section should be amended to include a new subsection that provides for cash advances to resettlement agencies, through either the States or directly from ORR.

Response: A State's contracting and grant-making rules govern whether cash advances may be provided to State contractors and grantees. This is an issue that local resettlement agencies should discuss with their State during the public/private RCA consultation. Federal rules would not apply since local resettlement agencies participating in the public/private RCA program would not be our direct grantees.

Section 400.13

Comment: One commenter felt that the new rule will impose new limitations on RCA which will not allow States to claim most case management costs. The commenter expressed concern that the proposed limitations may be a precursor to future funding restrictions particularly regarding the administrative portion of the RCA allocation. The same commenter felt that the proposed case management rule would increase the burden on service providers to track each client by public assistance category.

Two commenters requested clarification on what types of case management services are chargeable to CMA. One of the commenters asked whether administrative costs related to employment-related case management are chargeable to CMA. Another commenter requested confirmation that case management services related to ESL, VESL, skills training, and on-the-job training may be charged to CMA. Two commenters stated that activities such as job referral, job readiness instruction, assisted job search, job development and placement, and post-placement services appear to be case management functions under the proposed rule. One commenter asked whether 100% of staff time is billable to the CMA grant in cases where staff have multiple functions.

Another commenter wondered what services funds are to be used for and whether administrative funds for service activities are to be added to services costs. One commenter suggested eliminating the requirement that administrative costs related to the provision of social services must be charged to the social services grant. The commenter felt that this requirement forces States to allocate social services funds to resettlement agencies that otherwise might not have received funding through a competitive social service grant process.

One commenter requested the extension of case management as a chargeable expense to CMA to allow for 90 days of post-placement follow-up to ensure real self-sufficiency. Another commenter felt that there is a disparity between ORR's requirement to provide employment services to refugee TANF recipients and the lack of funding for case management of these services since

only case management costs targeted to RCA recipients may be chargeable as CMA administrative costs. The commenter complained that this places a State in a position where it may only provide case management as an employability service to TANF recipients as an unfunded option.

One commenter requested that ORR provide parameters for the allocation of administrative costs and recommended that private agencies should have the same percentage of administrative overhead allowed in their contracts as States.

Response: We have decided to withdraw the provision which would have allowed certain case management costs for RCA eligible recipients to be charged to CMA. The comments suggest to us that there exists a broad range of understanding regarding case management which could result in costs charged inappropriately to CMA and/or an inappropriate increase in administrative costs charged for tracking and allocating of those costs. Based on the comments, we were uncertain whether this provision would have resulted in sufficient benefit to refugees to justify the change. Therefore, we believe that further review and discussion is needed before case management costs can be charged to CMA. Thus, the provision at 45 CFR 400.13(d), which prohibits the charging of case management service costs to the CMA grant, remains unchanged.

Regarding the commenter's concern about the administrative cost provision at § 400.13(e), it is our view that whether private agencies should have the same percentage of administrative overhead allowed in their contracts as States is an issue that is up to the States to negotiate with their contractors in the refugee program.

Comments on Subpart C—General Administration

Section 400.23

Comment: Two commenters felt that the RMA hearing process used should be the same as the process used in the State's Medicaid program. One of the commenters recommended that § 400.23 should conform with § 400.93(b) in existing regulations which requires that RMA hearings be the same as those required for Medicaid. One commenter recommended that each State should be allowed to specify in its State plan what hearing process it intends to use in an excepted RCA program. A State may prefer to use the Food Stamp/Medical Assistance fair hearing procedures in order to simplify procedures since an RCA recipient is likely to be a Food Stamp/Medical Assistance recipient but will not be a TANF recipient. One commenter questioned whether it was feasible for local resettlement agencies to use the same hearing procedures as are used in the TANF program. Another commenter felt that replicating the local district fair hearing process for one or more local contractors would not be cost-effective and would not make administrative sense. The commenter felt that the State would have to insist that RCA hearing procedures be consistent with TANF and general assistance hearing procedures and that small contractors would not have the resources to implement such a hearing process. The commenter felt that the proposed rule may already contain the flexibility to allow for private agencies to use the public process.

Response: In keeping with commenters' suggestions, we have revised this section by removing reference to the RMA program since § 400.93(b) requires the RMA hearing process to conform with the State's Medicaid program, and we have revised § 400.54(b) to require a State to specify in its State plan what hearing process it intends to use in a publicly-administered RCA program. In regard to whether it is feasible for local resettlement agencies operating a public/private RCA program to refer hearing requests to the State hearing process used in the TANF program or some other public agency hearing process, yes it is feasible as long as the State agrees to such an arrangement. There is no restriction in this rule that prohibits States from designing public/private RCA programs that utilize public agency hearing procedures such as the TANF hearing procedure.

We have revised this section to make clear that the public assistance hearing procedures at 45 CFR 205.10(a) continue to apply to all assistance and services provided under the refugee program, unless otherwise specified by regulations in this part. For example, in the determination of eligibility for RMA in accordance with § 400.93(b), the State must use the Medicaid fair hearing procedures. In providing RCA, the final rule at § 400.54(b) specifies that States must describe the public agency hearing procedures they intend to use in the RCA program. All RCA hearings must comport with the constitutional requirements of *Goldberg* v. *Kelly,* 397 U.S. 254 (1970). *See* the Comment and Response section at § 400.83 for further discussion of the hearing requirements for adverse RCA determinations.

Section 400.27

Comment: One commenter recommended adding the words ''or by a voluntary resettlement agency to a State'' in § 400.27(b) to enable a State that has established a public/private RCA program to monitor the provision of cash assistance provided by a local resettlement agency without individual client signed consent.

Response: We have amended this section to incorporate the commenter's suggestion.

Comments on Subpart D—Immigration Status and Identification of Refugees

Section 400.43

Comment: One commenter complained that the NPRM does not remedy the inequitable treatment of asylees. Current policy provides 8 months of RCA/RMA eligibility to asylees from their date of arrival in the U.S., the same as refugees. However, since it may take up to 6 months or more for an asylum applicant to be granted asylum, the actual period of RCA/RMA eligibility that is available for asylees is usually 2 months or less. The commenter recommended amending the regulations to allow asylees RCA/RMA eligibility for 8 months from the date that asylum is granted as opposed to 8 months from the date of arrival. Another commenter pointed out that the current regulation and the proposed rule do not describe how and when asylees may access Federal benefits and recommended that the final rule address this serious omission.

Response: ORR's policy on asylee eligibility for refugee program assistance, issued in a policy notice in 1982, defines the time-eligibility of an asylee as beginning with the first month in which an asylee has entered the United States, in accordance with sections 412(d)(2)(A) and 412(e)(1) of the Immigration and Nationality Act. Thus asylees, like refugees, are eligible for RCA and RMA during their first 8 months in the U.S. and are eligible for social services during their first 5 years in the U.S. We recognize that as a result of the time it takes for an asylum applicant to be granted asylum, an asylee often has few months of eligibility remaining for RCA and RMA. We will examine this issue further to determine from a policy and operational perspective whether the existing policy may be modified.

Comments on Subpart E—Refugee Cash and Medical Assistance

Section 400.50 (§ 400.51 in the NPRM)

Comment: One commenter recommended that the definitions of

filing unit and household in § 400.51 of existing regulations be retained and that States be required to define the members of the filing unit in their State.

Another commenter pointed out that by removing references to AFDC requirements in this section, the proposed rule omits key client protections which should not be omitted, such as requirements that applications must be processed promptly, that applicants must be informed of their rights and responsibilities, and that once an individual has been found eligible, he or she remains eligible until determined ineligible. The commenter also recommended that the regulations should retain the requirement that benefits be provided to all eligible persons. The commenter stated that this section should specify that notice to an RCA applicant that cash assistance has been authorized or denied must include an explanation of the reasons for the decisions and of the right to request a hearing to appeal the decision. The commenter felt that this is an essential element of due process and must be addressed.

Another commenter recommended that if an RCA recipient is notified of termination because of time-ineligibility, the local resettlement agency must be required to ensure that the recipient is assisted in applying to the appropriate State agency for other cash assistance programs and that the State must be required to determine eligibility for TANF and general assistance.

Response: Since we have included a definition of ''family unit'' in § 400.2, we do not see the need to retain the terms ''filing unit'' or ''household''.

We have amended this section to include the requirement that eligibility must be determined as promptly as possible within no more than 30 days from the date of application and that applicants must be informed of their rights and responsibilities. In regard to the comment that a notice to an RCA applicant indicating authorization or denial of cash assistance must include an explanation of the reasons for the decisions and of the right to request a hearing to appeal the decision, we have added a new § 400.54(a) which includes this information. It should be noted that these notices must be translated into appropriate languages as required by § 400.55. Section 400.54(a) includes a requirement that a State or its designee, such as local resettlement agencies, must review the case of an RCA recipient who is terminated because of time-ineligibility to determine possible eligibility for TANF or GA. We believe that the regulation implicitly requires that all eligible persons will receive RCA until they are no longer eligible. *See, e.g.,* § 400.60(a).

Section 400.51 (§ 400.52 in the NPRM)

Comment: Four commenters recommended adding a provision to this section that would allow refugee families to receive RCA until eligibility for TANF is determined. One of the commenters also recommended requiring States to reimburse local resettlement agencies for the amount of RCA provided during the period of TANF eligibility determination. The same commenter recommended that local resettlement agencies should be required to ensure that potentially eligible refugees are assisted in applying in a timely manner for TANF and SSI. Another commenter asked for clarification on the process to be used to determine TANF eligibility through the State public assistance offices prior to accessing RCA. Another commenter requested clarification on whether refugees may be determined ineligible for TANF without necessarily being processed through the States' public assistance offices.

Four commenters expressed concern that refugees under the public/private RCA program will be less likely to access other support and benefit programs. Three commenters recommended adding a provision that would require local resettlement agencies to refer refugees to Medicaid, RMA, or Food Stamps so that RCA applicants would be informed of their rights to other government benefits and services. Two commenters suggested that ORR address the benefits of co-location of State and private eligibility staff. One commenter felt that one of the outcome measures that must be used for the public/private RCA program is the percentage of refugees that are referred to and receive RMA and Medicaid.

Response: While we allow refugees to receive RCA until eligibility for SSI is determined because the time frame between application and receipt of the first SSI payment is frequently long, we do not see a compelling reason to allow the same coverage for refugee families who are waiting for TANF eligibility to be determined. We have not received reports of refugee TANF applicants having to wait a significantly longer period of time for eligibility determination than RCA applicants.

Regarding eligibility determination for other cash assistance programs, § 400.50 (§ 400.51 in the NPRM) includes a requirement that States and their designee agencies must refer refugees or other cash assistance programs for eligibility determinations. We have amended this provision to indicate that such referrals must be made promptly. In designing a public/private RCA program, it is the responsibility of States to develop a procedure that ensures that refugees are properly referred to other benefit programs, in accordance with § 400.50(c) (§ 400.51(b) in the NPRM). We believe that States, in consultation with local agencies, will adequately address how to ensure that refugees are able to access other public benefit programs for which they may be eligible. The ORR Matching Grant Program has been operated for many years by voluntary agencies and referral to other programs has not been an issue for refugees.

We support the co-location of State and private eligibility staff and encourage States to consider this arrangement in their public/private RCA program. Some of our programs, particularly the Wilson/Fish alternative programs, have very effectively co-located public eligibility workers at refugee provider agencies to ensure that refugee eligibility for other cash assistance programs and other benefits is determined in a timely manner.

In regard to tracking the percentage of refugees that are referred to and receive RMA and Medicaid as an outcome measure, we already have a system for tracking the number of refugees who access RMA. States are required to report the number of RMA recipients to ORR on a quarterly basis. Since Medicaid is not under the jurisdiction of the refugee program and we no longer reimburse States for refugee Medicaid costs, we do not require States to report on refugee Medicaid use. ORR's annual national refugee telephone survey, however, provides data on the percentage of refugees in the household survey who report receiving Medicaid. The annual survey includes telephone interviews with a large sample of refugee households that have been in the U.S. 5 years or less.

Section 400.52 (§ 400.53 in the NPRM)

Comment: One commenter expressed concern that, in the absence of any other prompt processing requirement, this provision seems to suggest that a State or agency only is required to process applications as quickly as possible if there is a determination of urgent need. The commenter felt that a general requirement for processing all applications promptly should be added.

Response: We have added language regarding prompt eligibility determinations to § 400.50 (§ 400.51 in the NPRM).

Section 400.53 (§ 400.54 in the NPRM)

Comment: Three commenters noted that the proposed rule would eliminate the existing eligibility exception for full-time students in the current regulations which allows RCA eligibility for full-time students in higher education if such enrollment is approved by the State, or its designee, as part of an individual employability plan for a refugee. The commenters stated that RCA recipients with professional skills can benefit from full-time enrollment in higher education to obtain certification to practice their profession in the U.S. The commenters recommended restoration of this eligibility exception.

Another commenter expressed concern that by restricting eligibility for RCA to refugees who are ineligible for TANF, SSI, OAA, AB, and APTD, all newly arrived refugees will not be able to benefit from the refugee-specific transitional assistance to be provided through the new public/private RCA program. The commenter recommended deleting this subsection.

Response: Section 412(e)(2)(B) of the INA prohibits refugees who are full-time students in institutions of higher education from receiving cash assistance. The refugee program emphasizes early employment by requiring refugees to become employed and self-sufficient within 8 months. We do think it's consistent with ORR's program goal for an RCA recipient to become employed and then enroll in a professional refresher training or recertification program at refugee program expense as allowed under § 400.81.

It is not possible to include TANF-eligible and SSI-eligible newly arrived refugees in the public/private RCA program because the costs would far exceed ORR's level of appropriated funding.

Section 400.55 in the NPRM

Comment: Two commenters noted that the proposed rule concerning eligibility redeterminations in States with TANF residency requirements inaccurately assumes that these residency requirements may legitimately be applied to refugees. One commenter pointed out that Congress, in enacting the welfare reform law, did not intend for the durational residency requirements to apply to newly arrived refugees from overseas, only to interstate migrants. The purpose was to prevent secondary migration across States and was not intended to preclude newly arrived refugees from accessing TANF benefits. One commenter recommended amending this section to state that the statutory authority for States to impose residency requirements does not preclude TANF eligibility for arriving refugees.

Response: While it may not have been Congress' intent to apply residency requirements to newly arrived refugees from overseas, there were a few States that, under State law, were applying the State's TANF residency requirement to newly arrived refugees, thereby denying TANF eligibility to these refugees and placing them on RCA for the 8-month RCA eligibility period. With the recent Supreme Court ruling in *Saenz* v. *Roe,* 119 S. Ct. 1518 (May 17, 1999), which makes the application of residency requirements to any TANF applicant who moves into a State unconstitutional, States must change their laws and practices. Given this ruling, we are removing this requirement.

Section 400.55 (§ 400.63 in the NPRM)

Comments: Three commenters objected that the proposed requirement to provide agency policy materials to refugees in both English and their native language would be a significant burden that would be cost prohibitive. One commenter suggested that States be given an option to provide a notice in English and provide a verbal translation of the notice to refugees. Another commenter recommended amending this provision to indicate that local contracts should demonstrate reasonable and practical methods to assist clients to understand agency policies in their own languages. In contrast, one commenter recommended that the required list of written policies in this section should be more comprehensive to include good cause criteria, procedures for an appeal of an adverse determination, including appeal procedures outside of the resettlement agency. The commenter went on to recommend that the resettlement agencies should provide written notice in the refugee's native language of the availability of the more detailed written policies. Two commenters recommended that the final rule clarify that the local resettlement agencies are the entities that should provide written translated policies and procedures to individual refugees, not the State. Two commenters indicated that local resettlement agencies would need to be given administrative funds to pay for a lot of translators to translate agency policies and procedures into refugee languages.

Response: By law, entities receiving federal financial assistance have an obligation to ensure that limited-English speaking people have meaningful access to their services. Section 601 of title VI of the Civil Rights Act of 1964, 42 U.S.C. 2000d *et seq.* states that ''[n]o person in the United States shall, on the ground of race, color or national origin, be excluded from participation in, be denied the benefits of, or be subjected to discrimination under any program or activity receiving Federal financial assistance.'' Language barriers experienced by persons with limited English proficiency can result in exclusions, delays or denials that may constitute discrimination on the basis of national origin, in violation of title VI. Department of Justice (DOJ) regulations at 28 CFR 42.405(d)(1) address the circumstances in which agencies that administer Federal financial assistance must make available language assistance, in written form, to persons with limited English proficiency. Based on this DOJ provision, we are requiring States or the agency(s) responsible for the provision of RCA, to ensure that reasonable steps are taken to provide written information in appropriate languages where a significant number or proportion of the population eligible to be served needs information in a particular language. Although this principle has never been expressly stated in ORR regulations, it is a restatement of current obligations under title VI and would apply in the RCA program, regardless of whether the RCA program is a public/private program or a program that mirrors the TANF program. Therefore we are moving this provision from the public/private RCA section of the regulations to the general RCA section and redesignating the section as § 400.55.

It is essential that States and/or local resettlement agencies ensure that every RCA recipient understands any and all policies that will have an effect on a recipient's cash assistance payment. This requirement includes all notices to refugees regarding eligibility, payment adjustments, or terminations. Regarding refugee language groups that constitute a small number or proportion of the RCA recipient population served, the State or the agency(s) responsible for the provision of RCA is not required to provide written information in the native language of the refugee ethnic group. However, States and/or local resettlement agencies must use an alternative method to effectively communicate agency policies to a limited English-speaking recipient such as the use of a verbal translation in the refugee's native language, to ensure that the content of the agency's policies is effectively communicated to each refugee. We do not have a particular

position on whether local resettlement agencies or the State should produce the written translated policies for recipients in the public/private RCA program. This issue should be worked out in the development of the public/private RCA plan. The preparation of written RCA policies in refugee languages and the use of interpreter/translators to explain agency RCA policy may be charged as an administrative cost to a State's CMA grant.

Section 400.56(a)

Comment: Twenty-nine commenters wrote in support of the public/private RCA program, 10 commenters stated they could not fully endorse the new program as proposed, and 70 commenters opposed the new program. Of the commenters who supported the program, 8 commenters supported the separation of RCA from the TANF program, while 17 commenters endorsed the flexibility that the new program would allow. Four commenters expressed support for strengthening a public/private partnership, while two commenters felt that the new program would firmly unite States and resettlement agencies into a partnership that will best utilize their respective strengths. Of those commenters who indicated they could not fully endorse the new program, two commenters stated that unless important components regarding resettlement agency capacity, flexibility, and legal protections from liability are put into place, they had serious doubts about the new program's likelihood of success. Of the commenters who opposed the establishment of the public/private RCA program, 49 commenters felt that the existing program has already demonstrated a high rate of success in achieving self-sufficiency and questioned the need to change the existing program. Seven commenters felt that the new program would not be in the best interests of refugees and would not benefit refugees.

Five commenters felt that the administration of RCA by private agencies should be an option, not a mandate. One commenter recommended letting States develop their own program design instead of mandating a certain approach.

Three commenters expressed concern that the addition of cash assistance administration to the responsibilities of local resettlement agencies would not necessarily result in greater self-sufficiency outcomes for clients who only have 8 months of assistance. One commenter expressed concern that the distribution of cash assistance would place an increased burden on the agency's administrative and accounting staff and would detract from the agency's primary focus of preparing clients for early employment. Two commenters were concerned that the establishment of the new program would result in trading a known system for an unknown and untried system. Two commenters had concerns about the additional burden on local resettlement agencies that developing a new program for a small portion of clients will create, while another commenter expressed concern about the additional burden the new program will place on States.

One commenter expressed the opinion that the public/private program as outlined in the NPRM is not practical if a State has a minimal number of refugees receiving RCA and/or those refugees are geographically dispersed across the State making implementation of a public/private partnership inefficient and costly.

Nineteen commenters made the point that the proposed RCA program would only benefit a small portion of the refugee arrival population and recommended that the public/private program should be offered to all newly arriving refugees, particularly TANF-eligible refugee families, if possible. Five commenters expressed concern about the inequity of refugees under the new RCA program being treated better than refugee families with minor children under TANF. Three commenters recommended that ORR pursue alternatives to TANF for families with minor children. One of the commenters proposed shifting funds from TANF funding to create a unified refugee resettlement program that includes TANF-type refugee families. Since the proposed rule specified that a family that becomes ineligible for Medicaid may be transferred to RMA, one commenter asked why the ORR regulations could not also specify that families with minor children, who terminate TANF because they are unable to meet the conditions of eligibility, may be transferred to RCA.

Eight commenters objected to restricting participation in the public/private RCA program only to local resettlement agencies. One commenter suggested that it would be more judicious, before mandating a specific type of agency, if ORR tested the capabilities of local resettlement agencies in handling the public/private program through a pilot. A second commenter felt that it was inconceivable to propose that States contract out several hundreds of million dollars annually in Federal funds without a required procedure to consider whether local resettlement agencies have the capacity to administer and deliver cash assistance and services before the program is initiated. Another commenter expressed concern that by limiting who the State may contract with, ORR's proposed rule represents a step back from the flexibility provided to States through welfare reform. The commenter felt that ORR regulations should allow flexibility that is equal to, or greater than, the flexibility allowed in TANF regulations. One commenter expressed concern that the new RCA program will require States to contract with agencies limited in experience in providing income maintenance.

Six commenters recommended that opportunity be given to refugee mutual assistance associations and other community-based organizations, in addition to local resettlement agencies, to administer the RCA program. Two of these commenters felt that the NPRM reflected unfairness to MAAs. Two commenters recommended amending this section to allow the greatest flexibility in program design by allowing public/private RCA partnerships with ''local resettlement agencies or other private non-profit partners providing refugee-specific services.''

Thirty-two commenters expressed concern that the new RCA program will increase administrative costs and questioned the cost-effectiveness of the proposed program. Of these, 12 commenters were particularly concerned about the level of administrative costs needed to implement the new program, in light of the relatively small number of refugees to be served. Five commenters felt that contracting with local resettlement agencies to administer RCA would cost considerably more than the existing State system. Three commenters predicted that there would be no savings in State agency costs that could be used to offset resettlement agency costs because there would be no reduction in State agency staffing or State responsibilities such as RMA administration, confirmation of TANF ineligibility, and notification of ineligibility to refugee clients and resettlement agencies. One commenter expressed concern about the risks in managing the funding level for the new RCA program if local resettlement agencies overspend RCA or have other difficulties in meeting a budget.

Four commenters expressed the opinion that increased levels of administrative costs will not result in improved employment outcomes. Two commenters expressed concern that replicating existing systems for the

provision of cash assistance with each agency will duplicate bureaucracy and multiply costs beyond reason. One commenter complained that the private eligibility determination and case management functions would duplicate responsibilities remaining with the State agency and would substantially increase costs. Another commenter stated that ORR should not force a more costly program on States.

One commenter felt that although the new program will result in additional costs initially, the new program, over time, will not cost more than the current program.

Five commenters raised questions about funding for the administrative costs of the new RCA program. Of these, one commenter asked how a State is to know how much is available for administrative costs. Another commenter asked if discretionary grant funds will be made available to States to cover private agency administrative costs. Another commenter asked if additional funding would be added to social service formula allocations to States to fund RCA administration. One commenter asked ORR to clarify its intent to cover administrative costs in the out years of the program, after initial start-up. The commenter felt that the NPRM was unclear about a State's responsibility for administrative costs.

Twelve commenters expressed concern that an increase in administrative costs to operate the new RCA program could force a reduction in the RCA eligibility period.

Twelve commenters felt that the due date for implementation of the new public/private RCA program of one year after publication of the final rule is unrealistic. The commenters indicated that many States may need more than 6 months after an RCA plan has been submitted to implement the plan to allow adequate time to negotiate contracts with participating agencies and to develop written policy. One commenter stated that it would take a year to simply amend administrative rules to accommodate the new program. Two commenters recommended an 18-month deadline with at least 12 of those months devoted to implementation. One commenter suggested having the implementation date coincide with the beginning of a fiscal year even if this extends the deadline beyond one year. Three commenters recommended requiring States to include a proposed implementation date in their public/private RCA plans, rather than setting a national due date. Three commenters supported an implementation date of October 1, 2000, or one year after the publication of the final rule and felt that the date for implementation should not be extended. One commenter recommended that more than 6 months within that one-year time frame be devoted to planning and consultation and less time for implementation, if necessary.

Response: We have given these comments, as well as the comments that appear in response to other sections of the proposed rule, a great deal of thought and have concluded, given the wide variance of views on the public/private RCA program, that it would be in the best interests of refugees and the refugee program to offer the public/private RCA program as an option, not as a requirement, to States. We found particularly compelling the argument from many commenters that the program in its current form has been very successful in helping refugees to achieve self-sufficiency and should not be changed. Equally compelling were the concerns expressed by a number of local resettlement agencies about the increased administrative burden of managing a cash assistance program and adhering to client protection and due process requirements, as well as concerns about having legal protection from liability. Also persuasive were commenters' concerns that the increased costs of administering the new program might not improve results for refugees.

The totality of comments gave us the view that the public/private RCA program would be eagerly pursued in some States as the right approach for the circumstances in those States, while in other States, such an approach would not necessarily result in the best program for newly arriving refugees and, therefore, would not be welcomed in those States.

Although we have not changed our belief that this is an opportune time to remove the refugee program from the public welfare system and move it towards a greater public/private partnership, we have no interest in forcing a public/private approach upon reluctant participants. Instead our principal goal is to provide greater flexibility to the program and its participants. Therefore, as this final rule describes, instead of requiring States to establish a public/private RCA program, we have decided to offer States the option of choosing this approach if they believe such an approach will work in their State. States that choose to pursue this option in concert with local resettlement agencies in their State must follow the regulations that specifically apply to the public/private RCA program in §§ 400.56, 400.57, 400.58, 400.59, 400.60, 400.61, 400.62, and 400.63.

In regard to the comments on expanding the public/private RCA program to include TANF-eligible families, while it would be ideal to place all newly arriving refugees in a special resettlement program for an initial period, it is not financially feasible to do so within the refugee program's appropriation level. The program's appropriation level has not been sufficient to reimburse States for the costs of refugee AFDC recipient costs since FY 1991. Regarding the recommendation to shift TANF funds to create a unified refugee program that includes TANF-type refugees, given the block grant nature of TANF funding, any decision to use TANF funds in the refugee program in ways that are consistent with a TANF purpose would rest with States.

With respect to limiting participation in the public/private RCA program only to local resettlement agencies, we have designated the same agencies that are responsible for the initial resettlement of refugees under the R & P program to maintain a continuity of assistance for newly arriving refugees. Many of these agencies have an experienced record of providing cash assistance to refugees through the Matching Grant program and, to a lesser extent, through the Wilson/Fish alternative program. Those refugee community-based organizations, including mutual assistance associations, who have a subcontract with a national voluntary agency to provide R & P services and meet the definition of a local resettlement agency at § 400.2 may participate in the public private refugee cash assistance program. These agencies would have had similar experience in administering cash assistance and would offer the continuity of assistance we are seeking.

In regard to comments about funding, discretionary funds will not be made available to States to cover private agency administrative costs. As described in § 400.13(e), a State may charge local resettlement agencies' administrative costs related to providing cash assistance to a State's CMA (cash, medical, and administrative) grant. With regard to how a State knows how much is available for administrative costs, States are not given a set amount or ceiling for administrative costs. In accordance with § 400.207, States may submit claims for reasonable and necessary identifiable administrative costs to ORR, using ORR's cost allocation guidelines. Since the refugee program began, States have been reimbursed 100% for their administrative claims.

The administrative costs of managing the services component of the public/private RCA program, regardless of the type of agency, must be charged to a State's formula social services grant. In response to another comment, ORR intends to make discretionary funds available during the initial years of start-up to help States pay for services to refugees in the public/private RCA program, particularly if a State's program design plans for a different group of agencies to provide services to public/private RCA recipients than the State's regular social service providers. A State may use a portion of these additional social service funds for social service administrative costs, but not for RCA administrative costs.

Regarding the coverage of administrative costs for the public/private program after the initial start-up years, States may continue to charge the public/private program's RCA administrative costs to CMA, while the public/private program's social service administrative costs may be paid for with a State's formula social services funds, just as the social service administrative costs of a State's regular social service program are paid for with formula social services funds, in accordance with § 400.206. With regard to concerns about a reduction in the RCA eligibility period as a result of an increase in costs to operate the public/private RCA program, ORR's first priority is to maintain the current RCA eligibility period.

Regarding the deadline for implementation of a public/private RCA program, we agree with the suggestion to allow States to include a proposed implementation date in their public/private RCA plans, and have added such a provision to the public/private RCA plan at § 400.58(a)(14). A State's proposed implementation date, however, may not be any later than 24 months after the date of publication of the final rule.

Section 400.56(b)

Comment: Four commenters expressed the need to have the flexibility to arrange consortia of providers in order to provide cash assistance and services to refugee clients of agencies too small to enter into direct contracts. These commenters pointed out that without achieving economies of scale through collaboration, States will not be able to enter into contracts at a reasonable administrative cost. The commenters also felt that if a State and the resettlement agencies handling the majority of resettlement in an area are able to arrive at a consensus which provides services to all refugees in the area, they must be able to proceed even if a minor agency is not willing or able to join the consortium.

Four commenters were concerned that States may, in the interest of administrative expediency, strive for uniformity in local program design and unintentionally undermine private sector diversity by excluding the smaller church-based agencies. Six commenters expressed concern that States will choose a lead agency or limit the number of resettlement agencies to contract with in order to limit the administrative burden of administering multiple contracts. These commenters recommended the inclusion of safeguards to prevent any interested resettlement agency from being excluded from full participation in the public/private RCA program.

One commenter recommended adding language to the final rule that would exempt States from Federal competitive procurement requirements when a lead agency is agreed upon through the planning process. Another commenter suggested expanding the language to allow States to contract with or make grants to local resettlement agencies since the ability in some States to make a grant to a non-profit is easier than contracting with a non-profit.

Fourteen commenters expressed concern about cash flow problems that many local resettlement agencies would experience if they are under contract to administer the new RCA program without cash advances. Several of the commenters pointed out that States generally use cost reimbursement contracts and do not provide cash advances. The lack of cash up front would pose a serious operating problem for most resettlement agencies. Eight commenters requested that ORR include a provision in the final rule that would provide advance funding to local resettlement agencies either through the States or directly from ORR. One commenter pointed out that it will be essential for ORR to permit the obligation of CMA to pay for the issuance of cash assistance checks to refugees in the early months of each fiscal year until the first quarter CMA award is made to States.

One commenter asked whether the final rule will require local resettlement agencies to notify the State of refugees who have become recipients of RCA, in order to reduce the risk of State offices enrolling these refugees in some other cash assistance program such as General Assistance or SSI.

Response: We have no objections to States arranging consortia of providers to provide cash assistance and services to RCA recipients in order to achieve greater cost-effectiveness. While we strongly encourage States that are planning to establish a public/private RCA program to consider including all local resettlement agencies that are interested in participating in the new program, we also believe that States must take financial and administrative considerations into account, as well as the capability of each agency, when making contracting decisions. Regarding whether a State and the local resettlement agencies handling the majority of resettlement in an area may proceed with a public/private program when a smaller agency is not willing or able to participate, this is a decision which the State may make. While we require consultation with all local resettlement agencies as well as other refugee providers in the planning of the public/private RCA program, final decision-making is in the purview of the State. However, all eligible refugees must have RCA available to them. We expect that where a local resettlement agency cannot or does not wish to participate and the State and other local resettlement agencies decide to implement a public/private RCA program, that appropriate provisions for referral and access to RCA will be made for the refugees who are resettled by the non-participating agency. The Director of ORR may also elect to implement the placement authority provided by the Refugee Act, should it appear necessary.

We have amended the language in this section to allow States to make grants, as well as contracts, to local resettlement agencies as one commenter recommended. In regard to exemption from Federal competitive procurement requirements, the regulations at 45 CFR Part 74 that require open and free competition would not be applicable to the public/private RCA program since our regulations require States that choose to establish a public/private RCA program to enter into contracts or grants with local resettlement agencies or a lead resettlement agency.

With the exception of a portion of the first quarter of each fiscal year, ORR currently provides advance CMA funding to States through quarterly CMA allocations at the beginning of each quarter to cover anticipated costs in that quarter. We cannot provide advance funding directly to local resettlement agencies that participate in the public/private RCA program because they are not our direct grantees; they are the State's grantees or contractors. Therefore, whether cash advances may be provided to local resettlement agencies is a State contracting or grant matter to resolve. Regarding obligation of CMA funds in the early months of the

fiscal year, we now have a way to permit States to obligate CMA funds early in each fiscal year to cover the costs of cash assistance payments to refugees in the public/private RCA program. The President's FY 2000 budget request to Congress included multi-year spending authority for the refugee program to allow funds appropriated in FY 1998 and FY 1999 to be available through FY 2001. Congress granted ORR this spending authority in its FY 2000 appropriation which will allow funds to pay for RCA costs in the early months of the new fiscal year.

Regarding whether local resettlement agencies will be required to notify States of refugees who have become recipients of RCA, States will have to require local resettlement agencies to provide them with timely information on RCA recipients since States are required to report RCA recipient numbers to ORR on a quarterly basis. We assume that each State that enters into a public/private RCA program will require in their contracts that local resettlement agencies must provide them with information on who is receiving RCA. States will need this information to monitor time-eligibility and duplication of assistance as well as to carry out their responsibilities under § 400.49. We do not believe this issue needs to be addressed further in our regulations.

Section 400.56(c)

Comment: Five commenters expressed concern that local resettlement agencies will not have the capacity to provide adequate statewide coverage and protection to new arrivals. These commenters predicted that the geographic dispersion of refugees in their States would result in refugees who reside in remote pockets of a State having difficulty accessing assistance and services. Another commenter was concerned that if an area of the State chooses to opt out of the new RCA program, this situation could be inequitable for refugees since the flexibility and incentives provided to refugees in the parts of the State where the public/private RCA program is operating may not exist in the sections of the State where a publicly-administered RCA program is operating. One commenter felt that a State must have complete discretion to choose those areas of the State in which a public/private program may be implemented and should not be bound by a need to reach agreement on this issue with a small local resettlement agency.

Response: Concerns about reaching refugees who reside in remote pockets within a State can be addressed by either choosing to provide RCA through the State welfare system in remote parts of the State and through a public/private RCA program in the populated areas of the State or by deciding that a public/private RCA program may not be appropriate for the State if the refugee population is small and is dispersed throughout the State. If a State is concerned about inequities between incentives that a refugee receives through the State's public/private RCA program and what a refugee receives through a TANF-type RCA program elsewhere in the State, the State has the latitude to minimize inequities through its program design of the public/private program. States, after consultations, do have the discretion to choose the areas of their State where they wish to implement a public/private program and whether they still wish to establish a public/private program.

Section 400.56(d)

Comment: Six commenters expressed the view that the eligibility determination function is an essential function of government that must be performed by public sector employees in order to ensure fair, unbiased and impartial eligibility determinations. Two commenters argued that the determination of eligibility by public sector employees avoids conflicts of interest such as potential cost or contract savings that may affect decision-making by private agencies. Two commenters stated that the proposed rule inappropriately empowers private organizations with decision-making and policy-setting authority for Federal funding for which States are ultimately responsible. Another commenter recommended that ORR amend this provision from ''must be responsible for determining eligibility * * *'' to ''may be responsible for determining eligibility * * *'' to allow more flexibility for an alternative division of tasks between the resettlement agencies and the States. One commenter recommended that States and local resettlement agencies should have the flexibility to allow eligibility determination by either party.

Eleven commenters expressed concerns about liability. The commenters pointed out that local resettlement agencies administering cash assistance could be sued by a refugee who disagrees with a decision. Even if an agency is proven to be right, the cost of staff time and legal fees would be very high. These commenters requested that the final rule include a provision to indemnify local agencies in disputes. One commenter asked for clarity on what responsibility local resettlement agencies would have for repaying ORR for unallowable expenses or for payments made to a refugee in error.

Response: Section 412(e)(1) of the INA (8 U.S.C. 1522(e)(1)) expressly authorizes private non-profit agencies to provide cash and medical assistance to newly arrived refugees. Public sector employees therefore are not required by law to make RCA eligibility determinations. Furthermore, ORR has implemented 13 projects under the Wilson/Fish authority where the eligibility determination function has been successfully performed by private sector agencies. We have, however, changed the language by replacing the word ''must'' with the word ''may'' in the sentence: ''Local resettlement agencies may be responsible for determining eligibility, and authorizing and providing payments to eligible refugees.'' We have made this change to provide as much flexibility to States as possible in deciding which of the fiscal and eligibility functions of the RCA program the State wishes to assign to the local resettlement agencies and which of these functions the State wishes to retain.

Regarding the appropriateness of giving private organizations decision-making authority over Federally-funded programs for which States are responsible, we are aware of no legal barrier to the kind of public/private partnership that is described in this regulation. Although the regulations call for joint planning between States and local resettlement agencies to design and implement a public/private RCA program, clearly, final decision-making authority in regard to the public/private program's policies rests solely with the State as our direct grantee.

Regarding protections from liability, we cannot provide local resettlement agencies with protection from liability. No agency, public or private, is free of liability. Clients have a right to take legal action if they feel they have been treated unfairly or discriminated against. In regard to the question about repayment of unallowable expenses to ORR under the public/private RCA program, since States are ORR's grantees, States, as the recipients of the funds, would be responsible for repaying the Federal government for improper expenditures. Local resettlement agencies, as subrecipients, would be accountable to the State, not to ORR.

Section 400.56(e)

Comment: One commenter expressed the opinion that the prohibition against

operating both a public/private RCA program and a State-excepted program in the same geographic location presents a barrier to implementing a public/private program where there are multiple resettlement agencies. Since a State cannot compel local resettlement agencies to participate in a private RCA program, a State would have to maintain the current RCA program in areas where only some local resettlement agencies chose to participate in the new program.

Response: We see no justifiable rationale for operating both a public/private RCA program and a publicly-administered RCA program in the same geographic location. This would not be programmatically wise; it would be duplicative, expensive, and confusing. In cases where not all local resettlement agencies are interested in participating in the public/private program, the State has the latitude to decide to establish a public/private RCA program in which all RCA-eligible refugees are served only by those local resettlement agencies that are interested in participating in the program. There would be no need to operate a publicly-administered RCA program in the same locale just because some of the local resettlement agencies do not want to participate in the public/private program. The deciding factors, in our view, would be the number of resettlement agencies that are not interested in participating and the proportion of new arrivals to the area that these agencies have resettled. If these agencies represent the majority of new arrivals resettled in the area, this would argue against establishing a public/private program.

Section 400.57(a)

Comment: Nine commenters expressed the view that national voluntary agencies must be included in the planning, development, and oversight of the public/private partnership. One of the commenters further stated that the involvement of the national agencies should entail establishing national standards to guide program design, assisting affiliates in developing program models and performance measurements, and encouraging and facilitating consultations. Two commenters suggested that the planning and consultation process, in addition to the local resettlement agencies, should include only MAAs and community service agencies that represent current and anticipated refugee groups. Two commenters wrote in support of the importance of MAA participation in the planning and consultation process.

One commenter felt that it is important to ensure that recent arrivals who are represented through local churches, such as Bosnians and populations from the former Soviet Union, have equal representation in the same manner as an established non-church MAA. One commenter suggested that States should look at the last 3 years of refugee arrivals in their respective States to determine the appropriate proportion of representatives from each refugee group that should be included in the decision-making. Two commenters noted that counties are not included in the planning process and should be. The commenters expressed concern that the new RCA program will be administered without the leadership and experience of the California counties. Two commenters suggested that the final rule should contain language that reflects ORR's commitment to making the RCA plan a joint effort on the part of States and local resettlement agencies. The commenters felt that States should negotiate the new RCA program with local resettlement agencies first, as primary participants, before consulting with others.

Two commenters cautioned that setting eligibility policies for the public/private RCA program should not be a negotiation or joint decision-making process with private agencies. One commenter pointed out that a government agency can be required to consult with private agencies on the policies, but should not be required to have the resettlement agencies participate in the final decision-making. One commenter recommended that the final rule should make clear that the final decision on the policy elements of the public/private RCA plan is the sole responsibility of the State agency.

Response: We agree that national voluntary agencies should be involved in the planning and development of a public/private RCA program. We have amended § 400.57(a) accordingly to include national voluntary agencies in the planning and consultation process.

With regard to limiting participation in the planning and consultation process only to MAAs and other organizations that represent current and anticipated refugee groups, we do not agree with this limitation. We believe MAAs and other agencies that serve refugees, but are not representatives of these refugees in the sense of being of the same ethnic group, are important organizations to include in the planning and consultation process because of their experience as refugee service providers and because they are likely to be affected by the establishment of a public/private RCA program. We agree that States should make sure that each refugee population group is given the opportunity to participate in the planning and consultation process. We do not feel, however, that States need to be so precise as to follow a 3-year arrival population ethnic breakdown to determine the degree of representation of each ethnic group at the consultations.

In regard to participation by counties, we agree and have amended this section to include counties. The participation of counties is particularly crucial in States such as California where the refugee program is a county-administered program.

As we indicated in our response to comments relating to § 400.56(d), we agree that final decision-making on policies for the public/private RCA program is the ultimate responsibility of the State as our grantee. However, we see nothing in this section that is inappropriate.

Section 400.57(b)

Comment: Two commenters questioned the need for a public comment period, with one commenter suggesting that this provision appeared unnecessary, redundant, and of little usefulness. This commenter also suggested that a longer planning period would be necessary in part because of this requirement. Two other commenters recommended that a description of the public comment process be included in the State's public/private RCA plan, including a list of participants and a summary of comments received.

Response: We have reconsidered our proposed requirement for public comment on the public/private RCA plan and have decided that this requirement is not essential enough to justify the additional time and burden that implementation of this requirement would place on States. We have, therefore, removed this requirement. We believe the comments of agencies and individuals involved in refugee resettlement will provide the necessary input that States will need to develop a public/private RCA program. However, States still have the option of soliciting public comment.

Section 400.57(c) (§ 400.57(b) in the Final Rule)

Comment: Five commenters expressed concern about this provision that would require a local resettlement agency to inform its national voluntary agency of the proposed public/private RCA program and obtain a written agreement that the national voluntary agency would continue to place refugees in the State under the public/private

RCA program. Four commenters felt that the role of the national voluntary agencies in the public/private program should be clarified. Two commenters recommended that documentation be included that the national agencies endorse the plan. One commenter said that agreement by the national agencies to continue resettling refugees in the State is an important provision. However, this commenter wondered if it is allowable for a national voluntary agency and a State to agree that the local affiliate agency will not be participating in an RCA contract but will be resettling refugees. The same commenter asked if a national voluntary agency would be prohibited from continuing to resettle in an area if the national voluntary agency and State could not agree on an RCA contract. The commenter also questioned whether letters had to be received from every national voluntary agency, even if only a few place refugees in the State. One commenter suggested that the letters of agreement from national voluntary agencies should include an assurance that refugee placements in the State will continue when the planning process determines that a public/private RCA program is not feasible and an excepted RCA program or Wilson/Fish program is selected.

Response: We agree that national voluntary agencies should have the opportunity to register their support or endorsement of a State's proposed public/private RCA plan. We have, therefore, amended this provision to require that letters from national voluntary agencies should indicate that the national agency supports the plan and intends to continue resettling refugees in the area. Letters from only those national agencies resettling refugees in the area need to be solicited. It is permissible for a State and a national voluntary agency (and the local affiliate) to agree that the local affiliate agency will not be participating in a public/private RCA contract or grant but will continue to resettle refugees in the State. Similarly, a national voluntary agency would not be prohibited from continuing to resettle refugees in a State if the national voluntary agency (and local affiliate) and the State cannot agree on an RCA contract or grant, provided that arrangements are included in the State plan to ensure that refugees resettled by the non-participating agency will be referred to the participating agency or agencies for services and assistance.

We do not agree with the suggestion that letters of agreement from national voluntary agencies should include an assurance that refugee placements will continue to a State that does not decide to establish a public/private RCA program. We do not see the necessity of such a requirement; voluntary agencies have been resettling refugees in States with publicly-administered RCA programs for years. The structure of the RCA program is only one factor to be considered in placement decisions in conjunction with other factors such as family reunification, available employment opportunities, and suitable resettlement conditions.

Section 400.58

Comment: One commenter asked if States only have a one-time opportunity to participate in the public/private RCA program and if States that opt to do the new RCA program have the latitude to later choose to opt out of the public/private program.

Response: States are not limited to a one-time opportunity to participate in the public/private RCA program, nor are States prohibited from opting out of a public/private program at a later date. States are expected to make their initial decision within 6 months and to implement whatever RCA option they choose—a public/private RCA program, a publicly-administered TANF-type RCA program, or a Wilson/Fish alternative—no later than 24 months after the date of publication of the final rule. If, in the future, a State that implemented a publicly-administered RCA program decides it wishes to switch to a public/private RCA program, the State may do so by following the requirements in §§ 400.57 and 400.58 and submitting a public/private RCA plan as an amendment to the State Plan for ORR review and approval. Similarly, if a State that originally implemented a public/private RCA program decides it would be better to change to a publicly-administered RCA program, the State may do so by submitting a State Plan amendment to ORR for approval.

Section 400.58(a)

Comment: Ten commenters expressed concern regarding the degree of program and budget information required in the public/private RCA plan. Five commenters felt that the level of detail regarding budgets and other program details required is unrealistic and inappropriate to include in the RCA plan since it will likely change regularly. One of the commenters suggested it would be more appropriate to include detailed budget information in the annual budget estimate that States are required submit to ORR under an existing provision in § 400.11(b)(1).

One commenter felt that a general service description should be required rather than a detailed description. The commenter pointed out that a detailed plan would have to be changed annually since ethnic groups, community needs, and available resources vary annually. In contrast, another commenter felt that the proposed plan does not require sufficient detail of the program policies and procedures to be established in a State's public/private RCA program. Two commenters opposed requiring an RCA plan that is separate from the State Plan that States are required to submit to ORR under § 400.4. One commenter recommended amending § 400.58(a)(4) to read: ''including a description of employment incentives and/or income disregards to be used, if any, as well as methods of payment, i.e., direct cash, vendor payments, etc.''

Three commenters objected to the words ''easy access'' in § 400.58(a)(5) as too vague. Two of the commenters felt that ORR should set minimum access requirements that the public/private RCA program must meet. One commenter recommended at a minimum that the final rule require that refugees have access during normal business hours and not be required to travel more than two hours round trip to access any benefits or services. Another commenter was concerned that the use of a vague term such as ''easy access'' could produce a standard for access to benefits that will result in litigation. One commenter recommended revising this provision to require RCA benefits administered under the public/private RCA program to be provided in as timely manner as under the current system.

Four commenters felt that the plan requirements regarding client protections and due process should be strengthened. One of the commenters felt that the due process requirement in the plan is insufficient and that a detailed description of the procedures that the public/private RCA program will follow should be required. The commenter recommended that the final rule should require that all services and notice be provided in the refugee's native language and that the RCA plan describe how this requirement will be met. Three commenters felt that the RCA plan should include a listing of good cause criteria for non-compliance with work activities. Another commenter recommended that certain due process elements should be required in the RCA plan: that refugees cannot be subject to any eligibility criteria that are not set forth in the public/private plan; that applications be processed promptly; that an applicant be informed of rights and responsibilities, and that an individual

retain eligibility for the duration of the benefit period unless affirmatively determined ineligible. Two commenters recommended that the RCA plan include a description of the means by which an individual can bring a problem to the attention of the State and obtain intervention, whether through an ombudsman or State Refugee Coordinator. Two commenters expressed concern that the client protection and due process requirements of the RCA plan will require local agencies to fully replicate the welfare system, particularly in regard to sanctions and appeals, fraud control, case composition, employability standards, and medical exams relating to employability. Another commenter asked what requirements of the public system would not be required of the private system.

Five commenters specifically objected to the language in § 400.58(a)(13) which requires a breakdown of costs ''including per capita caps on administrative costs.'' The commenters recommended deleting the reference to per capita caps on administrative costs, stating that per capita or percentage caps on administrative costs would make it difficult to maintain small programs, would limit case management capacity, and would limit a local agency's capacity to participate in the public/private RCA program. One commenter asked ORR to cite the authority for requiring a cap on administrative costs.

Three commenters suggested adding new elements to the RCA plan. The commenters recommended adding a § 400.58(a)(14) that would require a description of the public comments process used, including a listing of the participants and a summary of comments received in the RCA plan. One commenter recommended adding a § 400.58(a)(15) that would require a description of the performance standards and measures upon which the new program will be monitored.

Two commenters expressed concern that the proposed public/private RCA plan requirements add substantially to existing reporting requirements. One of the commenters felt that the requirement for a detailed budget specific to the public/private program without eliminating any other plans and reports already required, adds to the administrative burden and to the cost.

Twenty-four commenters felt that a 6-month period to develop a public/private RCA plan is too short, while one commenter felt that 6 months was an adequate time frame. Two commenters recommended allowing 9 to 12 months for planning, another commenter recommended one year for planning and one year for implementation, while one commenter recommended a planning period of 12 to 18 months after publication of the final rule. One commenter recommended that ORR be flexible with due dates to allow planners sufficient time to handle unexpected contingencies and to make changes to the plan during its development.

Response: We believe it is essential for the public/private RCA plan to include the details this section requires. Each of the items in the plan is important to address and thoroughly consider in order to successfully implement the new program. Given that a shift to an RCA program administered by private agencies represents a major change in the refugee program, we need to see the details of the proposed program in order to make a responsible decision regarding approval. Regarding budget, we require a breakdown of proposed program and administrative costs in order to assess the cost effectiveness of various program designs. It is essential that States provide the required budget breakdown as part of the public/private RCA plan. However, in subsequent years, after the new program is implemented, it makes sense, per one commenter's suggestion, to include budget information on the public/private RCA program in a State's annual budget estimate to ORR.

In regard to the requirement that the budget breakdown include per capita caps on administrative costs, we want to clarify that we do not intend to impose caps or ceilings on administrative costs, nor are we authorized to do so in our statute. The intent of the language on administrative caps is simply to require, in a case where a State decides to set an administrative cap in its contracts or grants with local resettlement agencies in an effort to contain costs, that the State include this information in its budget breakdown. We have amended the language in this provision to clarify that information on administrative caps should be included only when a State proposes to use a cap on administrative costs.

In response to a commenter's suggestion, we have added language to § 400.58(a)(4) that requires information on methods of payment, in addition to employment incentives. We have decided, however, not to add any new elements to the RCA plan, other than the inclusion at § 400.58(a)(14) of a proposed implementation date.

In regard to comments that client protections and due process requirements should be strengthened in the RCA plan, we have added language to § 400.50 requiring States and local resettlement agencies to process applications as promptly as possible within no more than 30 days from the date of application and to inform applicants of their rights and responsibilities. Such requirements do not need to be addressed in the RCA plan; they need to be described in the public/private program's procedural and policy manuals. We believe the other recommendations regarding client protections are excessive or are unnecessary because they are adequately addressed in other sections of the regulations.

Regarding concerns that the client protection and due process requirements for the public/private RCA program will turn local resettlement agencies into mini-welfare systems, the reality is that private agencies that administer the RCA program are subject to the due process requirements contained in the U.S. Supreme Court decision in *Goldberg* v. *Kelly* the same as public agencies. In States that elect to establish a public/private RCA program, it will be important for local resettlement agencies that are concerned about taking on due process responsibilities to work with their State in delineating the due process responsibilities that the State may be willing to retain, such as the hearing process, and those responsibilities that the private agencies may have to exercise, such as notifying applicants or recipients in a timely fashion that benefits have been denied or terminated and explaining the reasons for the action and how the decision can be appealed.

Regarding the words ''easy access'', we have decided that a more appropriate term to use is ''reasonable access'' and have amended this provision accordingly. Rather than prescribing what reasonable access means, we prefer to allow States to define reasonable access in keeping with circumstances in their particular State. States may define reasonable access in terms of the length of time it takes a recipient to reach the local resettlement agency, such as the example provided by the commenter, or in terms of the distance between the location where a recipient resides and the location of the agency.

In response to comments about the due date for submission of the public/private RCA plan, we have changed the due date for the plan to no later than 12 months after the date of publication of the final rule. A State that chooses to establish a public/private RCA program, however, must notify the ORR Director

of its choice no later than 6 months after the final rule is published. As stated in response to the prior comment, States that initially decide to implement a public/private RCA program must do so within 24 months of the date of publication of the final rule.

Section 400.58(d)

Comment: Two commenters objected to ORR prior approval of the public/private RCA plan. One of the commenters recommended deleting the prior approval requirement and the 45 days for the plan to be approved.

Response: We believe that ORR review and approval of the public/private RCA plan is essential, as is our review and approval of all elements of the State Plan.

Section 400.58(e)

Comment: One commenter recommended deleting this provision that requires that any amendments to the public/private RCA plan be developed in consultation with local resettlement agencies and submitted to ORR. Another commenter felt the proposed amendment process was too cumbersome and recommended that only a major change in providers and eligibility and benefit amounts should require a plan amendment. One commenter recommended amending this provision to require that any amendments to the RCA plan must be developed in consultation with the national voluntary agencies, as well as local resettlement agencies. One commenter recommended that any amendment to the public/private RCA plan should include consultation beyond the local resettlement agencies, to include MAAs, refugee service organizations, and the public.

Response: We have not made any changes to this provision. We believe each of the items listed in § 400.58(a) is sufficiently major to require that amendments to these items be submitted to ORR for review and approval, since changes to these items will have an effect on RCA recipients. In regard to suggestions that consultations on plan amendments should include a broader range of agencies, including national voluntary agencies, MAAs, and the general public, we believe such a requirement would be excessive and unnecessary.

Section 400.59

Comment: Three commenters recommended adding language that would prohibit States and local resettlement agencies from considering any resources remaining in the applicant's country of origin or from considering a sponsor's income and resources when determining eligibility for RCA.

Response: We have amended this section, as well as § 400.66, in keeping with the commenters' suggestion.

Section 400.60(a)

Comment: Six commenters felt that the payment ceilings were inadequate. Another commenter concurred, but stated that the payment ceilings should be increased to the extent that the appropriation permits without reducing the eligibility period. Another commenter suggested that the final rule should include payment ceilings that are based on the most recent Federal poverty level depending on when the final rule is published. Another commenter wants an assurance in the final rule that refugees will not be tied to State standards for TANF, which the commenter describes as inadequate. Another commenter did not support the establishment of a national payment ceiling. Instead, this commenter suggested that States and local resettlement agencies make cash payments to refugees at a level they agree is best suited to achieving early self-sufficiency and to enriching the quality of life. One commenter felt that it would be better to use funds to extend the RMA eligibility period instead of increasing RCA benefit levels.

Seven commenters expressed concern that public/private RCA payment rates could be higher in a given State than the TANF payments, creating an inequity for participants in the two programs. Two of the commenters felt that consistency across programs, especially if the State operated a public/private program for RCA recipients in major resettlement areas and a State excepted program in the balance of the State, is important to maintain. The commenters recommended adding language to this section that would allow States to reserve the difference between the TANF payment level and the higher RCA payment level for non-direct cash purposes such as first and last month's rent, a Job Access loan to cover tools, etc.

One commenter stated that ORR is erroneously assuming that few families with minor children are relying on RCA because they are eligible for TANF in most States. The commenter believed that significant numbers of families will need to rely on RCA rather than TANF since in nearly half the States, two-parent families are not eligible for TANF unless they meet certain requirements regarding work history or current unemployment.

Two commenters suggested that ORR advise States to consider the possible impact of increased benefit levels on eligibility for RMA and consider the use of indirect payments or non-cash payments to avoid adverse effects.

Response: In order to ensure that ORR has adequate funding from appropriations to meet cash assistance costs, it is necessary to balance the desire for higher payment ceilings, or no payment ceilings, against the need to accurately forecast costs. A payment ceiling serves as a budget forecasting tool used by ORR to estimate cash assistance payments. ORR has set the payment ceilings at a level that represents what ORR estimates it can provide to meet each refugee's basic needs from appropriated funds without lowering the RCA eligibility period, based on the most recent data available regarding the number of RCA refugee arrivals. In fact, the ORR payment ceilings are higher than many State TANF payment levels. The payment ceilings are based on the 1998 HHS Poverty Guidelines. As stated in the NPRM, if the Director determines that the payment ceilings need to be adjusted for inflation, ORR will issue revised payment ceilings through a notice in the **Federal Register**.

In States where the public/private RCA payment ceilings are higher than a State's TANF payment level, if a State is concerned about maintaining uniformity in the payment levels of both programs for the sake of equity, States have the flexibility to set the public/private RCA payment equal with the TANF payment or to use the difference between the TANF payment level and the higher public/private RCA payment level for purposes such as one-time direct cash incentives for early employment and self-sufficiency, or non-direct cash purposes such as rent or a loan to cover the cost of tools as one commenter recommended. We see no need to amend this section to allow this type of flexibility; the flexibility already exists in the proposed rule.

With respect to the possible impact of increased benefit levels on RMA eligibility, we have removed the possibility of adverse effects on RMA eligibility by adding a requirement under § 400.102 that any cash assistance payments received by a refugee may not be considered in a determination of RMA eligibility, including RCA or any cash grants received by a refugee under the Matching Grant program and the Department of State or Department of Justice Reception and Placement programs.

Regarding one commenter's belief that significant numbers of refugee families

with dependent children will need to rely on RCA, ORR's RCA participation data do not support the commenter's assertion. To the contrary, we have experienced a steady and significant national decline in the RCA participation rate since the inception of State TANF programs, particularly in States where refugee families with dependent children were historically served in the RCA program because they did not meet the AFDC work history requirements for two-parent families. We have seen a major shift of refugee families with children from the RCA program to the TANF program.

Section 400.60(b)

Comment: Two commenters concluded that the NPRM seems to limit reimbursements to States to no more than the ORR payment ceiling so that States with a TANF rate higher than the RCA ceiling would have to absorb the difference between the two payment rates with no ORR reimbursement. Another commenter asked whether refugees will receive less than 8 months of payments in States where the TANF payment level is higher than the RCA ceiling.

Response: We do not intend to limit reimbursements to States to the public/private RCA payment ceiling in situations where RCA is paid at a higher TANF payment rate. In States where the TANF payment is higher than the RCA payment rate, we will reimburse States for RCA costs at the higher TANF payment rate. In States where the TANF payment level is higher than the RCA ceiling, a refugee's RCA eligibility period will not be affected by the higher payment rates.

Section 400.60(c)

Comment: Eight commenters recommended allowing States to offer bonuses or other incentives that exceed the monthly ceiling as long as the total combined payment to refugees does not exceed the monthly ceiling times the total number of months in the eligibility period. The commenters felt this type of flexibility would allow States and local resettlement agencies to design a program that rewards early employment. Two commenters wanted to use varying levels of cash assistance and other incentives throughout the 8-month period instead of providing equal monthly payments in the belief that this type of approach would most effectively encourage early employment. Another commenter expressed concern that the ceiling limits the flexibility to support work by providing stipends or incentives up front since the NPRM would not allow a work expense stipend and work incentive bonus before the earnings are received if this amount plus the cash payment exceeds the monthly ceiling. The same commenter also stated that the NPRM seems to preclude one-time payments for work-related expenses such as tools or uniforms in states where the RCA monthly payment is near the ceiling level.

One commenter asked whether cash payments may continue to be given after a refugee becomes employed. The commenter also wondered whether each local resettlement agency would be free to give different employment incentives/bonuses as is done in the Matching Grant program or whether all resettlement agencies would have to give identical assistance.

One commenter stated that the NPRM seems to make it beneficial to clients to access cash assistance before job placement which may delay the goal of self-sufficiency and increase dependence on cash assistance. This may pose a problem in States where the goal is to place refugees in jobs right away before accessing cash assistance. The commenter suggested providing incentives to those States and local resettlement agencies that obtain immediate job placements for refugees.

Response: We have revised this section to allow States and their public/private RCA agencies the flexibility to exceed the monthly payment ceiling in order to provide incentives to encourage early employment as long as the total payment to a refugee does not exceed the ORR monthly ceiling times the total number of months in the RCA eligibility period. We will allow this flexibility in the monthly payment ceiling with one stipulation: States and local resettlement agencies must ensure that RCA funds for any refugee are not used up before the end of the 8-month period in a way that would jeopardize a refugee who might need cash assistance in the latter part of the 8-month eligibility period. In other words, we do not want to see a total of 8 months of RCA funds given to a refugee early in the eligibility period such that there are no RCA funds left for that refugee should he/she need assistance in the latter months of the 8-month eligibility period.

Cash payments may continue to be provided after a refugee becomes employed as long as a State's public/private RCA program design permits cash payments after employment. Whether each local resettlement agency will be able to provide different employment incentives instead of a uniform incentive again will depend on a State's public/private RCA program design. These are not issues that ORR intends to regulate.

In regard to States where the focus is on placing refugees into early employment to limit the need to access cash assistance, such States, in order to maintain this focus, could choose to design their public/private RCA program as a cash assistance diversion program where newly arriving refugees would be given a one-time payment for not accessing RCA. It is important to emphasize that with this final rule, States will have a great deal of flexibility to design a public/private RCA program as they choose.

Section 400.61

Comment: Twelve commenters objected to limiting the contracting of services under the public/private RCA program to local resettlement agencies, thereby excluding many experienced MAAs and community-based organizations from providing services to public/private RCA recipients. These commenters expressed particular concern that refugee providers that have been the primary employment service providers in a number of States, and have a successful record of moving refugees to self-sufficiency, would now be excluded from receiving service contracts under the public/private program, resulting in a loss of expertise offered by these organizations. One commenter made the point that the proposed rule would duplicate or replace services that are already successfully operating. Five commenters were concerned that local resettlement agencies in many States may not have the experience or capability to offer effective employment services to refugees. One of the commenters worried that those resettlement agencies that are inexperienced in providing employment services will require a long period of time to achieve the level of expertise held by existing service providers, thereby creating a gap in services. Another commenter felt that the final rule should require local resettlement agencies to maintain subcontracts with existing qualified service providers. One commenter raised the point that some States now provide services directly, a role that ORR is proposing to give to local resettlement agencies.

Three commenters felt that the exclusion of MAAs violates the principle of equal opportunity by discriminating against MAAs. One commenter observed that the proposed exclusion of MAAs and community-based organizations appears to run counter to ORR's emphasis on empowering communities because it

disempowers the very community-based organizations that were founded by refugee communities.

Three commenters stated that the proposed program is in conflict with California law (AB 3245) which places responsibility for refugee employment service programs with the counties.

Nine commenters recommended that the services contracted to local resettlement agencies under the public/private program should be limited only to those employment services designated in the State Plan. Twelve commenters felt that services such as ESL, health screening, mental health services, and vocational training are more efficiently contracted by the State for the total refugee population and should not be fragmented through local resettlement agency administration for the public/private RCA recipient population.

One commenter observed that separate service programs for RCA clients are unworkable and if mandated, will greatly increase costs.

Five commenters felt that post-RCA services should not be restricted to ethnic community providers and that the current array of eligible providers should be maintained. Three commenters asked whether refugees who become self-sufficient and no longer receive cash assistance will continue to be eligible to receive social services. Two commenters asked whether service dollars would have to go through the lead agency and then be subcontracted out to other resettlement agencies in cases where a lead agency is used to administer the public/private program. One commenter asked whether a local resettlement agency could provide social services if the agency is not providing cash assistance. Another commenter wanted clarification on whether an RCA client returns to the local resettlement agency for services if the client becomes employed before 8 months of services are up and then becomes unemployed, thereby needing more services.

Ten commenters had comments about program outcomes in the new program. Four commenters felt that the final rule needs to provide more specific guidance on what the outcome measures and criteria will be for evaluating the success of the new program. One commenter cautioned that the public/private program may result in higher job placement costs because service providers that have had experience in providing job placements at low cost will, in some cases, be replaced by less experienced providers. Three commenters viewed the establishment of another set of outcome measures as redundant and unnecessary, given the existing Government Performance and Results Act (GPRA) measures that ORR already requires of States and Matching Grant agencies, as well as the Department of State's Reception and Placement standards and local TANF standards. If separate standards must be established for the new public/private program, the commenters argued for designing the measures at the local level, not the national level.

While one commenter indicated support for designing outcome measures that assess more than employment outcomes, the commenter cautioned that measures such as language outcomes require more sophisticated means of assessment. The commenter recommended that ORR needs to consider for the final rule the outcome expectations that are most appropriate within the limits of an 8-month program. One commenter took issue with the language that ORR is looking to the resettlement agencies ''to ensure that refugees receive the skills, such as English language acquisition * * *.'' The commenter noted that no one can ensure this and felt that it doesn't make sense to add this as an outcome because it doesn't involve any measurable result, other than a process outcome.

Three commenters felt that the difference in performance measures followed by the Department of State and ORR should be made into a uniform set of measures where both agencies are using the same measures and the same time frames for looking at outcomes.

Response: While philosophically we believe in the wisdom of having the same agencies that are responsible for the placement of refugees in a State to also be accountable for what happens to these refugees in regard to economic and social self-sufficiency, we are persuaded by the comments that in terms of the provision of services, it would not make sense to require States to contract or award grants for services only with local resettlement agencies under the public/private RCA program. In States where local resettlement agencies are the major providers of employment services, it would make eminent sense for a public/private RCA program to contract with the resettlement agencies for both the provision of cash assistance and services. But we recognize that in States where MAAs and other community-based organizations have been the primary providers of employment services, it would not be in refugees' best interests to divert RCA refugees away from the established refugee social service network to agencies that may be new to employment services. Therefore, while we would encourage States that choose to establish a public/private RCA program to contract or award grants for services, whenever programmatically wise, with the same agencies that administer the cash assistance program, we have decided not to mandate States to do so. We will leave it to the States to select the service agencies that can most effectively help refugees in the public/private RCA program become employed and self-sufficient.

In public/private RCA programs in which local resettlement agencies are responsible for both the provision of cash assistance and services, the locus of accountability will rest with these agencies for the achievement of resettlement and self-sufficiency outcomes, as well as for the provision of proper and timely cash payments to refugees. In the case of public/private RCA programs where States choose to contract or award grants for services with different agencies than the local resettlement agencies that are administering the cash assistance program, States will be required to: (1) Establish procedures to ensure close coordination between the local resettlement agencies providing cash assistance and the agencies providing services to RCA recipients; and (2) set up a system of accountability that identifies the responsibilities of the different participating agencies and holds these agencies accountable for the results of the program components they are responsible for.

In regard to commenters' recommendations that the services that public/private RCA agencies provide should be limited to employment services, our position is that the range of services that agencies, be they local resettlement agencies, MAAs, or other agencies, are contracted to provide under the public/private program is a State decision. The only stipulations are that the services must be among the allowable services listed in §§ 400.154 and 400.155 and the service agencies must be held accountable for employment and self-sufficiency outcomes. We agree that services such as ESL, health screening, mental health services, and vocational training do not have to be provided by the public/private RCA service agencies and may be more effectively provided by other agencies.

With respect to the provision of post-RCA services, we did not intend to imply that post-RCA services may only be provided by ethnic community providers. Services provided to refugees after their 8-month participation in the public/private RCA program may be provided by any provider that a State

decides to contract with. We stated in the NPRM that States and local resettlement agencies must maintain ongoing coordination with MAAs and other ethnic representatives to ensure that services provided under the public/private program are coordinated with longer-term resettlement services that are frequently provided by ethnic community organizations after the 8-month RCA period. This statement was not meant to suggest that MAAs and other ethnic organizations are the only providers of post-RCA services.

In cases where a lead agency is used to administer the public/private program, whether service funds must go through the lead agency to other resettlement agencies through subcontracts is up to States to decide as part of their program design. ORR is not requiring a particular approach when a lead agency is used. In response to another comment, a local resettlement agency could provide social services even if the agency is not providing cash assistance. A client in the public/private RCA program who loses a job before the end of the 8-month period and needs additional services should return to the same service agency that was providing the client with services before he or she got the job.

With respect to comments on program outcomes, we do not believe that detailed guidance on program outcomes for the public/private RCA program should be regulated. We intend to issue guidance on outcome measures for the public/private program at a later date through a State Letter just as we have done in regard to outcome measures for the social services and targeted assistance programs, under the Government Performance and Results Act. The commenters' concerns about the potential redundancy of establishing another set of outcome measures in addition to what States are already required to report under GPRA is a point well-taken. We will make every effort to dovetail outcome requirements to minimize redundancy and reporting burden as we consider, in collaboration with States, outcome measures for the new public/private RCA program. Regarding measures of English language acquisition and basic living skills, we do not intend to include process outcomes, such as classroom enrollment, in our consideration of appropriate measures for skill acquisition.

Regarding commenters' requests that the Department of State and ORR use a uniform set of measures and time frames, we are working with our DOS colleagues to reduce differences in the outcome measures that each agency uses and will continue to work with DOS on this issue.

Section 400.62

Comment: One commenter asked how local resettlement agencies will be given their fair share of secondary migrant cases that are resettled through national voluntary agencies that do not have affiliates in the local area. The commenter wondered if ORR intends each resettlement agency to be assigned all secondary migrants who were resettled through their national office. Another commenter wondered how the program will be equitably managed by the State if secondary migrants resettle in areas without representation by local resettlement agencies. One commenter suggested that in the case of secondary migrants who are not affiliated with a local resettlement agency, it might make sense to allow a refugee service provider that has contact with the secondary migrant to be responsible for eligibility determinations and the provision of cash assistance and services under the public/private RCA program. Another commenter requested ORR guidance on the impact of secondary migration on outcome measures, particularly secondary migrants who arrive late in the 8-month eligibility period.

Response: The arrangement used to serve secondary migrants will be determined by States. In States that plan to establish a public/private RCA program, commenters should take up their concerns about the assignment and handling of secondary migrants with their State during the planning and consultation process.

Section 400.63 (§ 400.64 in the NPRM)

Comment: Fourteen commenters provided comments on this provision. Seven commenters opposed the use of national voluntary agencies in training local resettlement agencies for the new RCA program either because they questioned how a national organization could meaningfully provide training to local affiliates on a plan jointly developed by States and local agencies or because they felt the use of discretionary social services funds for this purpose could not be justified, given the need to address long-term social adjustment issues with these funds.

Four commenters felt that national voluntary agencies could play a useful role in providing technical assistance and monitoring to local affiliates. One of the commenters, a State, suggested that the national agencies could be helpful in assisting local affiliates to develop the capacity to manage cash transfer systems and in advising States on their local affiliates' ability to manage cash transfer. Three commenters were concerned that the funding to support national voluntary agency participation was not clearly identified in the NPRM. One of these commenters stated that the funding mechanism to support the national voluntary agencies' role should be embodied in the regulations and not left to the availability of discretionary funds. Three commenters suggested that more clarity is needed on which training responsibilities rest with States and which with the national voluntary agencies. One commenter felt that this provision was too vague and suggested that national agencies should be required to provide certification that the training of all relevant staff has been conducted prior to the start of the project. One commenter, a local resettlement agency, felt that the role of the national voluntary agencies should be limited to training and technical assistance and only when it is requested at the local level. Two commenters suggested that the States were in a better position to train local agencies.

Response: Since national voluntary agencies have had a long-term oversight relationship with their affiliate agencies in regard to both the R & P program and the Matching Grant program, we believe it is appropriate and useful for national voluntary agencies to share in the responsibility of preparing local resettlement agencies for their new role in implementing the public/private RCA program. In States that choose the public/private RCA option, we would expect the State and the relevant national voluntary agencies to work out the details of the training together and delineate precisely which training responsibilities will be carried out by the State and which responsibilities will be carried out by the national agencies. We do not feel that the details of the training should be prescribed in regulation. States that elect to establish a public/private RCA program are likely to develop different program designs that will vary in terms of local resettlement agency responsibilities, requiring customized training, not a national, regulated delineation of training responsibilities between States and national voluntary agencies.

Regarding funding to support national voluntary agency participation in training, we do not believe that it is appropriate or necessary to regulate the funding mechanism to be used to pay for national voluntary agency participation in the public/private program. We believe the use of non-formula discretionary funds will be the best way to support national voluntary agency participation.

Section 400.65 in the NPRM

Comment: Three commenters thought that monitoring needs to begin immediately after implementation. One commenter thought that use of discretionary funds for monitoring is unacceptable and that funding to support this activity must be integral to the program and part of the final rule. One commenter felt that the monitoring by ORR, the State, and the national agencies as proposed in the NPRM is not reasonable and that monitoring by just one entity would be sufficient. Another commenter thought that local agencies and States can develop their own responses to training and monitoring needs. Two commenters suggested that the final rule should have specific performance measures by which the new program will be evaluated. One of the commenters felt that the regulations require compliance monitoring, but do not require States to take any action against agencies based upon findings. Another commenter said that the regulations should empower the state agencies to terminate a private agency's ability and right to participate in a public/private partnership at any time for mismanagement. Two commenters supported joint monitoring but thought that arrangements, particularly dates, times, and content need to be negotiable and planned cooperatively in advance.

Response: We have decided to remove this section. Now that the public/private RCA program will be optional, it does not make sense to regulate a particular monitoring approach for the public/private program. If a number of States choose the public/private option and are interested in a joint monitoring approach that involves the national voluntary agencies, we will explore ways to support that collaboration.

Regarding the suggestion that the final rule should contain language that empowers States to terminate a local resettlement agency's participation in the public/private program for mismanagement, States already have this authority through State grant and contract rules.

Section 400.65 (§ 400.66 in the NPRM)

Comment: Eight commenters stated that States should not have to go through a cumbersome waiver process to opt to continue a public sector RCA program. Two of these commenters felt that the public sector program should be the requirement, with the public/private RCA program being the exception. Three commenters objected in particular to having to go through an elaborate, time-consuming consultation process in order to choose the excepted program. One commenter indicated that requiring States to show that they have made a ''good faith effort to reach an agreement'' as a condition of receiving approval from ORR for an excepted RCA program is inappropriate. One commenter recommended that the requirements and criteria for an exception be deleted and this section be amended to allow a State to choose the proposed program structure that meets the needs of refugees in the State. The commenter also recommended adding language that gives the Governor of a State the latitude to elect to operate its public RCA program consistent with the State's TANF program, without ORR review. This flexibility would allow States to operate the RCA program in a manner that is least divisive for the States.

Thirteen commenters recommended making it harder for States to opt out of a public/private RCA program. Seven commenters recommended requiring Governors to obtain concurrence from resettlement agencies in States that decline to participate in the public/private program. Two commenters recommended that ORR require a full explanation and accompanying documentation before granting an exception. Two commenters recommended requiring public hearings as part of the exception process. One commenter recommended adding additional criteria for seeking an excepted program to make it harder for States to opt for the status quo. Two commenters questioned what guarantees are there that States will act in good faith in negotiating with voluntary agencies. Two commenters recommended that the Governor of a State must make a good faith effort through meetings with local resettlement agencies and other organizations, prior to making a decision to request an exception.

Two commenters suggested that States should have the option to continue operating the RCA program using old AFDC rules rather than the State's TANF rules. One of the commenters stated that his State did not see it as a burden to maintain a separate system based on former AFDC rules. One commenter recommended that in the case of a State that has an excepted program as well as a public/private program operating in the State, the State should be allowed the option to use the same payment levels, eligibility standard, etc. in the RCA excepted program as in the State's public/private program, instead of being required to mirror TANF. The commenter pointed out that without this flexibility, States would either have to make the public/private program identical to TANF, or have refugees in different parts of the State receiving different benefits.

Seven commenters recommended expanding the alternatives in States that determine that neither a public/private RCA program nor an excepted program are the best approach for their State. Four commenters recommended including a voluntary agency model as an option under this provision, while three commenters specifically recommended the Matching Grant program as a viable alternative that should be added under this provision. One commenter recommended adding a model of direct contracting between ORR and national voluntary agencies as an alternative. Two commenters recommended that currently funded comprehensive alternative projects would be acceptable alternatives under this subsection.

Response: In keeping with our decision to allow States the flexibility to choose among different options for the RCA program, we have removed the proposed section and replaced it with a provision that allows States the option of modeling their RCA program after their State TANF program. States will be required to submit an amendment to their State Plan describing the elements of their TANF program that will be used in their RCA program pursuant to the procedure described in § 400.8 no later than 6 months after the publication of the final rule. A publicly-administered TANF-type RCA program must be implemented no later than 24 months after the date of the publication of the final rules. Those States that wish to maintain their current AFDC-type RCA program, instead of changing to a TANF-type RCA program, may submit a request for a waiver to the ORR Director under § 400.300. The ORR regulations that govern an AFDC-type RCA program have been retained for this purpose under § 400.45.

In regard to the comments that argued for making it harder for States to opt out of a public/private RCA program, we do not believe that such a course of action would benefit the refugee program and would only serve to foster an adversarial climate between States and local resettlement agencies. In addition, it is unrealistic and inappropriate to require a Governor to obtain concurrence from resettlement agencies to opt out of a public/private RCA program. A Governor does not have to obtain concurrence from service agencies before making a decision on a program.

We have no objections to the recommendation that States that choose to operate both a public/private RCA

program and a TANF-type RCA program in their State should be allowed the option of using the same payment levels and eligibility standards in the TANF-type RCA program as in the public/private RCA program. If, for some reason, a State wishes to, and is able to, set up such an arrangement, we have no problems with such an approach.

Regarding comments on alternative RCA options, neither the Matching Grant program nor another direct contracting arrangement between ORR and national voluntary agencies would be an appropriate alternative for the State-administered RCA program because these models involve direct grants from ORR rather than contracts or grants administered by States. Any alternative that a State chooses would have to allow State management of the alternative. However, outside the context of this regulation, the Wilson/Fish authority at § 412(e)(7)of the INA allows non-profit agencies to be direct grantees of ORR.

Section 400.66 (§ 400.67 in the NPRM)

Comment: One commenter recommended that States operating an excepted RCA program should be allowed to make the beginning date for RCA cash assistance payments to be the date of application even if cash assistance payments are started later under the State's TANF program. The commenter felt that the short RCA eligibility period justifies avoiding any delays in payment. One commenter felt that the final rule should make clear that adherence to other TANF rules is only required with respect to financial eligibility and clearly state that the full range of non-financial eligibility policies and procedures under TANF do not apply to RCA.

Response: After considering the commenter's suggestion, we have amended this section to allow States that have elected to operate a publicly-administered RCA program to use the date of application as the beginning date for RCA payments, in lieu of the TANF beginning date for cash assistance payments, if they so choose. We agree that States should have the flexibility to choose the earlier start date for cash assistance payments in light of the short eligibility period for RCA recipients.

We have amended § 400.66(a)(4) (§ 400.67(e) in the NPRM) by adding the word ''financial'' before the word ''eligibility.''

Section 400.67 (§ 400.68 in the NPRM)

Comment: One commenter indicated that the language in the proposed regulation, that identifies TANF work requirements as hours of participation and allowable work activities, creates confusion by only referring to certain aspects of the TANF work requirements, thereby implying that other aspects of the TANF work requirements would apply to the State-excepted RCA program. The parenthetical reference to hours and allowable activities should either be deleted or comprehensively expanded.

Response: We agree with the commenter and have deleted the words ''hours of participation and allowable work activities.''

Comments on Subpart F—Requirements for Employability Services and Employment

Section 400.75(a)

Comment: One commenter recommended adding a new item (7) to this subsection that would require refugee RCA recipients who are also Food Stamp recipients, if they live in a geographic area where there are no refugee service providers, to participate in the Food Stamp Employment and Training (FSET) program as a condition of receipt of RCA.

Response: If an RCA recipient lives in an area where there are no refugee providers, the recipient may participate in the FSET program or any other employment and training program to satisfy the requirement at § 400.75(a)(1) that an RCA recipient must participate in employment services within 30 days of receipt of RCA.

Section 400.76

Comment: Two commenters indicated their support for removal of Federal requirements for exemptions from employability services, while one commenter felt that the regulations should retain certain exemptions such as persons over 65 who are incapacitated or are needed in the home to care for an incapacitated family member. The commenter also felt that the regulations should exempt victims of domestic violence from work activities under certain circumstances. Two commenters recommended that the final rule should permit States to add additional exemptions from the work requirements.

Response: We are leaving it up to the States to determine the exemptions they believe are necessary for the RCA program. States are as capable, if not more capable, of making decisions on exemptions as we are. We trust the States to make intelligent decisions on when and under what circumstances to exempt victims of domestic violence and elderly persons.

Section 400.81

Comment: One commenter pointed out that § 400.81(c)(2) in existing regulations should be removed since it conflicts with proposed revisions to § 400.81(b) which limits full-time professional recertification services to individuals who are working. Another commenter argued that the proposed rule to restrict full-time professional recertification training to refugees who are employed should be withdrawn. The commenter felt that it should be up to each State's RCA program to decide whether such training may be available to a refugee who is not employed.

Response: Our thanks to the commenter for pointing out the problem with § 400.81(c)(2). We have removed this subsection. We continue to hold to our view that full-time professional recertification training is an appropriate use of our funds for employed refugees, but not unemployed refugees. We do not believe that this type of full-time training, which generally is not short-term in duration, is appropriate for unemployed refugees in a program that emphasizes early employment and has a short period of cash assistance.

Section 400.82

Comment: Five commenters expressed concern that the proposed rule does not adequately ensure the constitutional due process rights of RCA applicants and recipients. One commenter cautioned that ORR cannot give resettlement agencies flexibility to decide what due process must be provided. The commenter further cautioned that providing inadequate guidance on due process issues would handicap local resettlement agencies from understanding what is expected of them under the law and would increase the likelihood of violating the constitutional rights of refugees.

One commenter felt that it is essential that the regulations govern all adverse actions and hearings for both the public/private RCA program and the excepted RCA program. The commenter noted that the language in this section regarding the public/private RCA program appears to apply to all adverse actions and hearings, while the language regarding the excepted RCA program seems to limit adequate notice and an opportunity for a hearing to work-related sanctions. In addition, there is no requirement that notice must be in the refugee's native language or that good cause criteria be provided in writing in the excepted RCA program. The commenter also noted that the proposed rule requires that local resettlement agencies provide timely

and adequate notice of any determination but does not define these terms. The commenter pointed out that the Supreme Court decision in *Goldberg* v. *Kelly* contains considerable detail on what constitutional due process requires with regard to timely and adequate notice. These details should be included in the final rule to prevent local resettlement agencies from inadvertently implementing inadequate standards, thereby risking litigation.

Another commenter felt that while safeguards are necessary to protect clients, it would be highly counterproductive if standards were limited to the complex standards of the public assistance system. The regulations should allow the development of standards more appropriate to private service providers. Two commenters were concerned that the requirement to provide written notice in a refugee's native language would be extremely costly and burdensome. One of the commenters suggested giving States the option of providing notice in English with a verbal translation of the notice.

One commenter asked whether a sanction implies loss of service as well as loss of cash assistance. One commenter suggested requiring States to specify in their State Plan what sanction process it will use. The commenter felt that States should be allowed to choose either the Food Stamp Employment and Training (FSET) or TANF sanction process because an RCA recipient is more likely to be an FSET recipient than a TANF recipient. Three commenters indicated that it would be essential to allow reversals of sanctions in the case of administrative error or changes in a client's circumstances that warrant a reversal of decision.

Response: This section of the NPRM described actions that private agencies administering the public/private RCA program must take to meet due process requirements and did not provide the same level of detail with respect to a publicly-administered program because we believe that State TANF programs must follow the due process requirements established by the Supreme Court in *Goldberg* v. *Kelly,* 397 U.S. 254 (1970). However, we have, nonetheless, added a new § 400.54 that governs all notices and hearings in both the public/private and publicly-administered RCA programs. Section 400.54 defines ''timely'' and ''adequate''. We have also made clear in § 400.55 of the final rule that written notice in refugee languages applies to publicly-administered RCA programs as well as the public/private RCA program. In regard to commenters' concerns about the cost and burden of providing written notice in a refugee's language, as we said earlier in response to similar comments on § 400.55 (§ 400.63 in the NPRM), agencies that administer Federal financial assistance are required under title VI of the Civil Rights Act of 1964 to provide written information in appropriate languages where a significant number or proportion of the eligible population requires the information in a particular language in order to fully understand the content of the information. In regard to refugee language groups that constitute a small proportion of the recipient population served, agencies must use an alternative method, such as verbal translation into the refugee's language, to effectively communicate the content of the notice of adverse action to the recipient.

It is important to clarify that the due process standards that agencies must follow are not standards derived from the public assistance program, as one commenter suggested; they are standards prescribed by constitutional law. Regarding whether a sanction implies loss of service as well as loss of cash assistance, ORR's definition is that sanction implies loss of cash assistance only. Reversals of sanctions in the case of administrative error, without question, are not only allowed, but are required.

Section 400.83

Comment: One commenter felt that the NPRM does not adequately ensure compliance with due process principles because the proposed rule includes only selected due process requirements instead of fully incorporating the due process provisions of the existing ORR regulations which cite 45 CFR 205.10(a) of the AFDC regulations.

Two commenters were concerned that the proposed rule does not specify any time frames for completion of the mediation and hearing process and recommended language specifying time periods and automatic referral of adverse determinations to an independent State entity. Both commenters felt this was particularly crucial because of the short duration of the RCA eligibility period. The timeliness of the process should be responsive to the refugee's need for a quick resolution.

One commenter asked whether an independent mediator on contract with a local resettlement agency would be an acceptable approach and if so, where would funding come from to pay for such a mediator. One commenter opposed contracting out the adjudication of appeals to any private entity. The commenter expressed the opinion that local resettlement agencies do not have the structure to administer an appeals process. The commenter felt that the entire appeals process should remain in the public agency where an adjudicatory structure and necessary safeguards exist to protect client rights. Two commenters recommended that hearings be conducted by an impartial official outside of the local resettlement agency. One of the commenters specified that the independent outside entity must be a State or local hearing authority. Three commenters felt that the final arbiter of disputes should be the State. One commenter recommended that States be given the option of choosing to have all hearings, including the initial hearing, conducted outside of the local resettlement agency. Two commenters felt that the final rule should explicitly indicate that the final hearing by an independent outside entity must be conducted prior to termination of benefits. The final rule should specify that aid must be paid pending this independent hearing.

One commenter recommended that States be required to specify the hearing process to be used in their State Plan. The commenter felt that States should have the option to elect the Food Stamp administrative hearing process rather than the TANF process since RCA recipients are also likely to be Food Stamp recipients and the same action would result in a sanction in both programs.

One commenter was concerned that a non-centralized fair hearing system may increase the possibility of non-uniform treatment of refugees in the appeals process. Six commenters expressed concern that local resettlement agencies will be required to fully replicate the welfare system functions to meet client protection requirements. Three commenters urged ORR to allow some flexibility in the design of due process protections and suggested that the Matching Grant program be looked at as a model.

Response: We have created a new § 400.54 that provides more detail about the appeals process resulting from any adverse action in the RCA program, including sanctions. While we recognize that local resettlement agencies may find it burdensome to put into place required due process procedures, the due process requirements set forth in the U.S. Supreme Court decision in *Goldberg* v. *Kelly* must, by law, be met. Publicly-administered RCA programs may use the TANF hearing procedures, Food Stamp hearing procedures, or any other public agency hearing procedures in accordance with § 400.54(b)(2) as long as they meet the due process

standards in *Goldberg* v. *Kelly* and as long as the sanction requirements under § 400.82(c)(2), which are required by statute, are followed. In keeping with the commenter's suggestion, States are required under § 400.54(b)(2) to indicate in their State Plan the hearing process to be used. In developing a public/private RCA program, States and local resettlement agencies may decide, as several commenters suggested, that the best arrangement would be for all hearing requests to be referred to a State-administered hearing process, such as the TANF hearing process or some other public agency hearing process. States and local resettlement agencies may decide, however, not to use a pre-existing State-administered process. We wish to note that the courts have never stated that due process and, in particular, fair hearings, must be provided by a governmental agency. In fact, the Supreme Court affirmed a prior Medicare Part B process which required final, non-reviewable decisions to be made by hearing officers appointed by private insurance companies. *See Schweiker* v *McClure,* 456 U.S. 188 (1982).

Although the AFDC rules did not permit aid to be paid to the claimant pending an administrative appeal of an adverse evidentiary decision, we agree with the recommendation that a refugee's RCA benefits should not be terminated until after a final administrative action has been taken. We have included this requirement in the final rule at § 400.54(b)(4). Of course, if the agency action is upheld, the assistance must be repaid.

In response to the comment on mediation, it would be an acceptable approach for a local resettlement agency to contract with an independent mediator, if the State agrees to this approach. This type of service is administrative in nature and could be claimed against the State's CMA grant.

The comments regarding the need for time frames is well-taken. We have added specific time frames for completion of the mediation and hearing process in the public/private RCA program as follows: In accordance with § 400.83(a)(1), mediation must begin no later than 10 days following the date of failure or refusal to participate, and may continue for a period not to exceed 30 days. This is the same time frame we required for conciliation in prior ORR regulations. Regarding a time frame for completion of the hearing process, we have decided in § 400.54(b)(1)(iii) to require that final and definitive administrative action must be taken within 60 days from the date of a request for a hearing in the case of a public/private RCA program where a pre-existing State-administered hearing process is not used.

Comments on Subpart G—Refugee Medical Assistance

Section 400.100

Comment: Two commenters suggested that § 400.100(a)(4) be deleted or revisited because mandatory termination of medical benefits for clients sanctioned under either the public/private or public RCA program should not occur. One of the commenters noted that the refugee program statute does not authorize or mandate denial of eligibility for RMA if a refugee has lost RCA eligibility due to a sanction. Another commenter pointed out that States have the option to terminate medical benefits for clients receiving TANF who are sanctioned. One of the commenters recommended that, at a minimum, States should be given the option as to whether to have a policy that denies RMA to refugees in RCA sanction status and/or be allowed to align their RCA/RMA sanction policy with their TANF/Medicaid sanction policy.

One commenter felt the use of the term ''filing unit'' is technically more correct and consistent with Medicaid eligibility requirements and should be maintained.

Response: We agree with the commenters that § 400.100(a)(4) which limits eligibility for RMA to refugees who have not been denied or terminated from RCA should be removed. We have done so. We have been advised that the more correct term to use, in keeping with Medicaid terminology, is ''assistance unit''. We have changed the term accordingly.

Section 400.101

Comment: Four commenters strongly supported the provision for increased flexibility for RMA eligibility determinations. Several commenters expressed concern that the ability to set higher financial eligibility standards only seemed to apply to States with medically needy programs under Medicaid and does not apply to refugees in States without medically needy programs. The commenters recommended coverage as well in States without a medically needy program in order to allow more refugees to remain eligible if they have earnings and to allow more late arriving spouses to be eligible. One commenter said that there is no apparent legal or policy reason to restrict either the Section 1931 financial eligibility option or the 200% of the Federal poverty level option, therefore the regulations should be changed to provide all States with as much flexibility as possible to use a higher financial eligibility standard.

One commenter recommended that if the final rule continues the requirement that States without a medically needy program must use their section 1931 methodologies in their RMA program, the final rule should be revised to at least allow a State to use the methodologies that a State currently has in place in their Section 1931 category, rather than require States to use the July 16, 1996, methodologies.

One commenter recommended eliminating § 400.101(b) so that obsolete AFDC need standards do not have to be applied to RMA. The commenter felt that this subsection is repetitive with the following section.

Response: After considering the comments, we have revised this section to extend the 200% of the Federal poverty level eligibility standard option to RMA programs in all States. We have also amended § 400.101(b) to allow a State to use the section 1931 methodologies that a State currently has in place.

Section 400.102

Comment: Four commenters supported RMA eligibility being determined on the basis of income on the date of application. Two commenters recommended that the final rule indicate that cash assistance provided through the public/private partnership should not be determined as either income or asset for purposes of RMA eligibility. The commenters hoped that this revision would eliminate the need for spend-down which is a hardship on newly arrived refugees and is hard to administer. One commenter felt that ORR should use the term ''methodologies'' wherever the word ''standards'' is currently used in this section to be consistent with the terminology used in the Medicaid statute.

Response: In considering the comments, we have decided to add a requirement that cash assistance payments may not be considered in determining eligibility for RMA. This would apply to cash assistance payments made under the publicly-administered RCA program, the Department of State's Reception and Placement program, the Matching Grant program, a Wilson/Fish alternative project, and the public/private RCA program. This change will ensure that cash assistance payment levels such as those in the public/private RCA program will not jeopardize RMA eligibility.

We have added the word ''methodologies'' to this section.

Section 400.103

Comment: One commenter indicated that some States do not have spend down programs and, instead, use their own state-funded medical assistance programs. The commenter recommended deleting this section or amending it to allow States to use a substitute methodology appropriate for their State. Another commenter recommended changing this provision to allow refugees with medical expenses to spend down to the financial eligibility standards that are used in the State's RMA program.

Response: We have clarified this section so it is clear now that States with a medically needy program and States without a medically needy program must allow RMA applicants to spend down to the requisite financial eligibility standard used in their State. The provision has been amended to require States to allow applicants for RMA who do not meet the financial eligibility standards used by the State to spend down to such a standard using an appropriate method for deducting incurred medical expenses. The State can use the methods set forth in 42 CFR 435.831(d) or a reasonable substitute methodology.

Section 400.104

Comment: Six commenters wrote in support of the provision to allow refugees who lose eligibility for Medicaid due to early employment to be transferred to RMA. Two commenters recommended that this provision be revised to make the transfer from Medicaid to RMA without an eligibility determination mandatory. One commenter suggested that the provision be revised to ensure that a refugee who is receiving Medicaid and has been residing in the U.S. less than the time eligibility for RMA, is transferred to RMA without an eligibility redetermination ''for the duration of the 8-month eligibility period.''

Response: We have amended this provision by making the transfer from Medicaid to RMA without an eligibility determination mandatory.

Comments on Subpart I—Refugee Social Services

Section 400.152

Comment: Twenty commenters suggested that ORR add citizenship/naturalization services to the list of allowable services for refugees who have been in the U.S. more than 60 months. Two commenters said that the term ''referral and interpreter services'' should be defined, questioning whether translation services are included in interpreter services and whether information can be provided, or only referral. This commenter asked whether emergency services and community education of the elderly, youth gang intervention, resolving intergenerational conflict and similar services are to be provided only to refugees who have been in the U.S. less than 5 years. This commenter recommends that more expensive employability related services and ESL be provided for the under 5-year population while the occasional emergency and other community services be provided without regard to time in country.

Response: We agree with the commenters that citizenship/naturalization services should be available to refugees who have been in the U.S. more than 5 years as well as refugees who have in the country less than 5 years. We have amended § 400.152 accordingly. We define referral and interpreter services to include translation services as well as the provision of information about services to which a refugee will be referred. We also consider referral and interpreter services to include assistance to refugees to apply for the referred service or benefit and following up to ensure that refugees receive the service.

Services such as emergency services, community education of the elderly, youth gang intervention, conflict resolution, and other community services may not be provided to refugees in the U.S. over 5 years unless these services are funded by ORR non-formula social services or non-formula targeted assistance funds.

Section 400.155

Comment: Thirty-four commenters expressed support for the inclusion of citizenship services as an allowable service under the social services and targeted assistance formula programs. One commenter suggested that ORR consider allowing voluntary agencies to be reimbursed for the costs of assisting refugees to obtain employment authorization documents. This commenter also suggested that ORR allow the cost of assisting refugees to apply for adjustment of status to legal permanent resident. Another commenter suggested that ORR clarify that funds can be used to assist disabled refugees in obtaining N–648 disability waivers from English and civics requirements for naturalization.

Response: To clarify, we do consider citizenship services to include the cost of assisting refugees to apply for adjustment to legal permanent resident status and the cost of assisting disabled refugees to obtain N–648 disability waivers from English and civics requirements for naturalization. Agency assistance to help asylees to obtain employment authorization documents (EADs) is not a citizenship service. However, we see it as an employability service and have added assistance to obtain EADs as an allowable service under § 400.154. Assistance to obtain EADs, as an allowable service for which ORR funds may be used, must be limited to the agency staff time used to assist an asylee or refugee to obtain an EAD and does not include paying the fee for EADs.

Comments on Subpart J—Federal Funding

Section 400.207

Comment: One commenter said that the regulation does not address how administrative costs will be determined, especially for States with very low refugee numbers. One commenter asked whether a State could limit voluntary agency administrative costs. Two commenters asked for clarification as to what constitutes reasonable cost and who makes that determination. One commenter asked whether there is a guaranty that all CMA administrative costs will be reimbursed by ORR.

Response: It is up to a State to determine its administrative costs for the public/private RCA program; ORR does not determine a State's administrative cost needs. In answer to the second comment, a State may limit the administrative costs of participating resettlement agencies. Regarding reimbursement of CMA administrative costs, we will reimburse 100% of a State's reasonable and necessary identifiable administrative costs, including the administrative costs of the public/private RCA program, to the extent available appropriated funds allow. To date, since the inception of the refugee program in 1980, ORR has been able to reimburse States each year for 100% of their administrative costs with available appropriated funds.

In regard to what constitutes reasonable cost and who makes that determination, we refer commenters to ORR's cost allocation guidelines which were issued to States in 1985 and continue in effect. *See* Transmittal No. 85–137 (June 18, 1985). These guidelines describe the kinds of administrative costs that States may claim and the allocation of these different types of administrative costs to different ORR funding sources. These guidelines, however, do not prescribe a

dollar amount to each type of administrative cost. States are currently allowed to claim 100% of their actual administrative costs as long as these costs are for the kinds of administrative activities listed in the ORR cost allocation guidelines. Thus ORR, as the ACF office responsible for issuing refugee program cost allocation guidelines, and States, which are responsible for setting the cost of different administrative activities, are both responsible for making the determination as to what constitutes reasonable administrative costs in the refugee program.

Section 400.210

Comment: Nine commenters expressed support for the proposed change to extend the due date for a State's final financial report for social services and targeted assistance formula grants. Two of these commenters indicated that 90 days for closeout may not be long enough, with one commenter suggesting 120 days for closeout. One commenter stated that ORR's prohibition against obligating cash and medical assistance beyond the current fiscal year presents a procedural problem for the public/private partnership, which will have to operate on a contractual basis.

Response: The due date for a State's final financial report for social services and targeted assistance formula grants will remain at no later than 90 days after the end of the two-year expenditure period. We do not believe a longer close-out period is warranted.

Section 400.211

Comment: One commenter asked what ORR will do when there is excess money, given the proposed change to § 400.211. The commenter suggested that excess funds be passed on to States for their uncovered costs and unfunded mandates of resettling refugees.

Response: The purpose of the proposed change to this section is to avoid a situation where ORR would be required by its regulation to increase the RCA/RMA eligibility period mid-way through the fiscal year because a redetermination is made at that time that indicates sufficient funds are available to raise the RCA/RMA eligibility period for the remainder of the fiscal year. Raising the eligibility period to 9 months for the balance of the fiscal year and then reducing it back to the current 8-month eligibility period at the beginning of the next fiscal year, due to insufficient funds to sustain the higher eligibility period, would not be in the best interests of either refugee recipients or the States that have to administer RCA and RMA. Regarding our use of excess funds, in budgeting our funds, we reserve some unspent funds to cover late CMA claims that States have a year to submit after the end of the fiscal year in which the funds were awarded. Beyond that, we have used statutory carry-forward language contained in recent appropriation laws to provide surplus CMA funds to States for social services or to help cover the resettlement costs of emergency arrivals such as the Kurds in FY 1997, and more recently, the Kosovars.

Other Comments

Comment: Nineteen commenters expressed concern that it would not be in the best interests of refugees to reduce available funding levels for formula and discretionary refugee social services to pay for high administrative costs to run the new program. One commenter adamantly opposed the use of social service funds to cover administrative costs in the new program. Another commenter noted that even States that choose not to operate a public/private program would be hurt to the extent that the increased costs for start-up, training, and monitoring in the new RCA program in participating States would result in the availability of less non-formula social service funding for other States.

Four commenters expressed the opinion that refugees will be penalized after the initial years of start-up because the increased administrative costs needed to run the new program will have to be paid with social services funding or a reduction in the RCA eligibility period. Two commenters expressed concern that ultimately the cost of administration for the new program will be at the expense of essential refugee services. Two commenters stated that ORR non-formula funds should be used to assist long-term refugee TANF recipients to become self-sufficient, not to pay for start-up costs. Another commenter stated that the use of discretionary social services funds to supplement formula funds may result in curtailing some discretionary projects that are in place, which will compromise services now and doubly so at the end of the grace period. One commenter would welcome additional social services funds in lieu of the program changes. Another commenter stated that the costs of the new program would further erode refugee social services, which have steadily declined on a per capita basis over the past 12 years.

Response: The administrative costs of the new public/private RCA program will be covered by CMA funds, not social service funds. During the initial years of start-up, we intend to supplement States' formula social services allocations with non-formula social services funds to cover the services component of the new RCA program, not the administrative component of the new program. These funds will not be used to cover the program's administrative costs, except for the administrative costs of providing social services. After the initial years of start-up, the service component of the new program will be covered by a State's formula social services funds, while the program's administrative costs will continue to be claimed against CMA funds. Regarding the concern that the use of non-formula social service funds to supplement State formula social services could result in curtailing some discretionary projects now in place, ORR's non-formula social service funding has been sufficient over the years to cover continuation projects as well as new funding uses. We do not agree with the assertion that refugee social services funds have steadily declined on a per capita basis over the past 12 years. To the contrary, refugee formula social services funds have increased somewhat over the 12-year period, while non-formula social services have increased dramatically over recent years. Since FY 1995, refugee arrivals have declined, thereby increasing the per capita amount for services.

Comment: Sixteen commenters expressed concern about how the establishment of the new public/private RCA program would affect the continued operation of the Matching Grant program and wondered how the two programs would be synchronized. The commenters were concerned that the use of the Matching Grant program would be diminished.

Response: We do not intend to reduce the use of the Matching Grant program. The Matching Grant program is an important alternative program for moving refugees to early self-sufficiency and we remain committed to the program. As State plans for establishing a public/private RCA program emerge, we will work with the Matching Grant agencies to determine in what ways the Matching Grant program should be modified, if at all, to ensure that the public/private program in a State and a Matching Grant program in the same State are working in concert to avoid duplication.

Comment: Four commenters felt that the final rule should provide adequate transition rules between the old and new RCA programs. Two commenters stated that ORR should fund an overlap

period to ensure that refugees in the old program experience no interruption of benefits.

Response: We would anticipate that States which decide to establish a public/private RCA program would plan to have an overlap period where refugees currently on RCA would continue in the old RCA program until their eligibility expires, while refugees who arrive in the State after a certain date would enter the new public/private program. We intend to reimburse States for the RCA costs in both programs during the overlap period.

Comment: Two commenters made the point that employment services under the new RCA program should be coordinated with Food Stamp employment and training activities (E&T), noting that able-bodied refugee Food Stamp recipients must meet Food Stamp employment and training participation requirements in order to receive more than 3 months of Food Stamps. One of the commenters asked if the final rule would give the States the authority to pass on to private agencies any financial penalties that result from the agencies' RCA/Food Stamp recipients not participating in the required E&T services.

Response: We received guidance from the Food Stamp Program on November 11, 1997, which clarified that refugee employability services approved, funded, or operated by ORR are federally recognized training programs for the purposes of Food Stamp eligibility. Therefore, refugees participating at least half-time in programs approved or funded by ORR are exempt from Food Stamp work requirements and time limits. We transmitted this information to States, national voluntary agencies, ORR discretionary grantees, and other interested parties through ORR State Letter 97–28 on December 5, 1997. The exemption from Food Stamp employment and training participation would apply to RCA recipients participating in the public/private RCA program.

Comment: One commenter said that the final regulation should address the need for changes to voluntary agency placement policy and require both consultation with States as to their capacity and the resettlement of free cases in areas not already highly impacted.

Response: We are engaged in ongoing discussions with the Department of State (DOS) and the national voluntary agencies on placement policy, including the issues raised by the commenter.

Comment: Several commenters expressed concern about how the public/private RCA program would be coordinated with the Department of State Reception and Placement (R&P) program. Two commenters felt that States would need to recognize the requirements for employment under the R&P program so that local resettlement agencies would be able to maintain their ability to place free cases in the State. Another commenter asked whether the provision for free case employment will be maintained. One commenter said that RCA handled by the local resettlement agencies would enable more refugees to receive RCA, thereby providing a more viable bridge between reception and placement support and earned income. One commenter asked how existing agreements between the voluntary agencies and the State Department would be changed and asked about the role of the State Department in the public private partnership. One commenter asked whether services to refugees resettled by a voluntary agency in an adjoining state are to take the place of State Department reception and placement services. One commenter noted that § 400.51 appears to allow RCA during the first 30 days, which is contrary to DOS reception and placement provisions.

Response: We agree that the relationship between the State Department's R&sP program and the public/private RCA program is important. We will work in partnership with the State Department to ensure that the two programs work well together to achieve the goal of seamless and coordinated services for RCA recipients. We intend to address the issues raised by the commenters in discussions with the Department of State, States, and the voluntary agencies soon after publication of the final rule.

Regarding the comment about RCA eligibility during a refugee's first 30 days in the U.S., ORR regulations have never precluded a refugee from accessing RCA during his/her first 30 days in the U.S. If a refugee who is receiving assistance and services under the DOS Reception and Placement program wishes to apply for RCA, under § 400.50(a), a State agency must provide that refugee the opportunity to apply for RCA and determine the eligibility of that applicant, the same as any other applicant.

Comment: Three commenters stated that the new public/private RCA program appears to be in conflict with the national move to co-locate employment and training services in a coordinated one-stop system. One commenter felt that the proposed program would remove refugees and refugee services from the one-stop system potentially hindering refugee utilization of other programs.

Response: The refugee service system in most States is a separate network of resettlement and employment services that are not co-located in a one-stop shop system. The establishment of a new public/private RCA program would not alter this arrangement. Because of the unique nature of the refugee resettlement program, Congress did not intend for refugee program services to be merged into a one-stop shop system with employment and training services for the general population. To the extent that services are offered at a one-stop shop that are appropriate to the needs of refugees, we encourage refugee providers to help refugees to access those services.

Comment: One commenter recommended an immediate effective date for the RMA changes and the inclusion of citizenship services as an allowable service.

Response: The general effective date in this rule is 30 days from the date of publication of the final rule, as required by the Administrative Procedure Act, 5 U.S.C. § 553(d). However, we recognize that States vary in the amount of time required to revise RMA policy instructions and implement the changes in RMA and that some States may not be able to implement these changes within the 30-day time frame. Therefore, while we expect States to implement the RMA changes as quickly as possible, we will allow States that need extra time to implement the RMA provisions no later than 90 days after the date of publication of the final rule. The 90-day effective date for the RMA provisions is indicated in the Effective Date section of this rule.

Regulatory Impact Analyses

A. Executive Order 12866

Executive Order 12866 requires that regulations be drafted to ensure that they are consistent with the priorities and principles set forth in the Executive Order. The Department has determined that this final rule is consistent with these priorities and principles. This final rule implements statutory authority based on broad consultation and coordination.

The Executive Order encourages agencies, as appropriate, to provide the public with meaningful participation in the regulatory process. As described elsewhere in the preamble, ORR conducted eight consultations around the country and two teleconferences to discuss whether and how States, voluntary agencies, service providers, and refugee organizations would like to

see the regulations changed. These meetings were attended by close to 500 participants representing the broad resettlement network. We also consulted with representatives of States, Washington-based interest groups, refugee mutual assistance associations, and national voluntary agencies in follow-up sessions in Washington, D.C. to discuss what we learned from the initial round of consultations and to obtain feedback on our possible regulatory changes. We received additional feedback after group representatives consulted more broadly within their networks following the last round of meetings. The input we received is reflected in these regulations to a considerable degree.

These rules represent a renewed, more flexible stage in the refugee program State/Federal partnership. Rather than requiring that one national program fit all local situations, ORR has provided States the option to establish a public/private RCA program with local resettlement agencies or continue a publicly-administered RCA program modeled after their TANF program. If a State chooses to establish a public/private RCA program, the State has the flexibility to determine that the public/private RCA partnership would work well in only one community, and propose to implement a geographically split model.

Under the public/private RCA program, we have also given States and local resettlement agencies broad flexibility to design a program which they believe will best serve refugees in their community. Rather than prescribing certain elements, we have given States and resettlement agencies the flexibility to determine: The income standard for receipt of RCA in their State; the benefit level within a broad range of benefit levels; whether employment incentives should be provided, and if so, how those incentives should be provided; the services to be provided; and the procedures States and local resettlement agencies will put in place to ensure due process and protections for refugees. States are also given the option to set a higher need standard for refugee medical assistance. And within the proposed public/private RCA plan structure, there are several administrative models which may be considered by States and local resettlement agencies.

One of our key goals in drafting the regulations was to recognize, encourage, and enhance the partnerships that Congress intended with the passage of the Refugee Act. Although we have drafted regulations for a federally-funded program, this rule is intended to reflect our recognition that resettlement takes place at the local level and works best when all parties work together. In the final rule, we have tried to support the different, but equally important, contributions that the public and private sectors are able to bring to the refugee resettlement process. We hope that the final rule will serve to foster better and stronger partnerships at all levels, including those among local resettlement agencies and service providers, which will result in good resettlement.

We estimate that the regulatory changes in the final rule could result in increased costs of approximately $8 million annually due to added administrative costs of local resettlement agencies in States that elect to establish a public/private program, $8 million annually for expanded refugee eligibility for refugee medical assistance, and $1 million for RCA payment ceilings. We believe that the number of States that will choose the public/private program option, however, may be limited.

This rule is considered significant and has been reviewed by OMB.

B. Regulatory Flexibility Analysis

The Regulatory Flexibility Act (5 U.S.C. Ch. 6) requires the Federal government to anticipate and reduce the impact of rules and paperwork requirements on small businesses and other small entities. Small entities are defined in the Act to include small businesses, small non-profit organizations, and small governmental entities. This rule will affect 46 participating States and the District of Columbia, and local resettlement agencies that agree to assume responsibility for providing cash assistance and services to newly arrived refugees in States that elect to establish the new public/private RCA program. Local resettlement agencies are non-profit private organizations that are responsible for the initial resettlement of refugees in the U.S. under cooperative agreements with the Department of State. Participation of these local agencies in the public/private RCA program to be established by this regulation will be strictly voluntary. In addition, local resettlement agencies that choose to assume responsibility for the new RCA program will be fully funded with Federal refugee program funds. These rules will only have an impact on those small entities (local resettlement agencies) that voluntarily elect to participate in the public/private RCA program. Thus, a regulatory flexibility analysis is not required.

C. Paperwork Reduction Act of 1995

The following sections contain information collection, third party reporting, or recordkeeping requirements that are subject to review and approval by the Office of Management and Budget (OMB) under the Paperwork Reduction Act of 1995 (44 U.S.C. 3507(d)): §§ 400.50(b), 400.54, 400.55, 400.57(b), 400.58, 400.65, and 400.68(b). The Administration for Children and Families has submitted a copy of these sections to the Office of Management and Budget (OMB) for its review.

Section 400.54(a) requires that States or their designees provide notice to applicants or recipients to indicate that assistance has been authorized, denied, or terminated and the program under which that determination was made. Section 400.54(b) requires States to specify in their State Plans the hearing procedures to be followed in the RCA program and requires that the written notice of any hearing determination adequately explains the basis for the decision and any further appeal rights. Section 400.55 requires that States or their designee agency(s) make available to refugees the written policies and all notices in English and in appropriate languages where a significant number or proportion of the recipient population requires information in a particular language, in accordance with Department of Justice regulations at 28 CFR 42.405(d)(1) regarding compliance with title VI of the Civil Rights Act of 1964. Section 400.57(b) requires that each local voluntary agency resettling in a State inform its national resettlement agency of the proposed public/private RCA program and obtain a letter of agreement from the national agency. Section 400.58 requires that States submit a public/private RCA plan for ORR review and approval before the State implements the plan. Section 400.65 requires States that elect to operate a publicly-administered RCA program to submit an amendment to their State Plan describing the elements of their TANF program that will be used in their RCA program.

The information in these plans is needed to carry out ORR's oversight responsibilities under section 412 of the Immigration and Nationality Act. Additionally, certain information is typically necessary to respond to Congressional and other inquiries about the program.

The effect of these information collection, reporting, or third-party notification requirements will be

limited to the 46 States and the District of Columbia that participate in the refugee program, and 2–3 non-profit agencies that administer the program in States that no longer participate in the refugee program. We anticipate that a limited number of States will elect to operate a public/private RCA program; those States that choose not to operate such a program will not have to submit a public/private RCA plan. Those States that choose to implement a public/private RCA program will have to submit a public/private RCA plan only once. Additional submissions will only be necessary if the plan is modified in the future. The average burden per response for the preparation of an RCA plan is estimated to be 24 hours. The total maximum annual reporting and recordkeeping burden that will result from this collection of information is an estimated 1,176 hours if all States elect to implement a public/private RCA program. States that wish to operate a publicly-administered RCA program will have to submit an amendment to their State Plan once. The average burden per response for the preparation of a State Plan amendment is estimated to be 3 hours. The total maximum annual reporting and recordkeeping burden that will result from this collection of information is an estimated 147 hours if all States elect to operate a publicly-administered RCA program. Other requirements, such as the State plan (§ 400.5), are not changed. States receiving refugee program funds have a plan on file at ORR. We estimate the number of hours required to amend the plan to be a maximum of 1 hour annually. The total maximum annual reporting and recordkeeping burden that will result from this collection of information is estimated to be no more than 47 hours if all States amend their plan in a given year. We estimate the average burden for other sections as follows: § 400.54 will be 1,200 hours annually; § 400.57(c) will be 200 hours the first year; § 400.55 will be 1,000 hours the first year and 300 hours annually thereafter.

D. Unfunded Mandates Reform Act of 1995

Section 202 of the Unfunded Mandates Reform Act of 1995 (2 U.S.C. 1532) requires that a covered agency prepare a budgetary impact statement before promulgating a rule that includes any Federal mandate that may result in the expenditure by State, local, and Tribal governments, in the aggregate, or by the private sector, of $100 million or more in any one year.

If a covered agency must prepare a budgetary impact statement, section 205 further requires that it select the least costly, most cost-effective or least burdensome alternative that achieves the objectives of the rule and is consistent with the statutory requirements. In addition, section 203 requires a plan for informing and advising any small government that may be significantly or uniquely impacted by the proposed rule.

We have determined that this final rule will not impose a mandate that will result in the expenditure by State, local, and Tribal governments, in the aggregate, or by the private sector, of more than $100 million in any one year. Accordingly, we have not prepared a budgetary impact statement, specifically addressed the regulatory alternatives considered, or prepared a plan for informing and advising any significantly or uniquely impacted small government.

E. Family Well-Being Impact

As required by Section 654 of the Treasury and General Government Appropriations Act of 1999, we have assessed the impact of this final rule on family well-being. The final rule implements new provisions for RCA and RMA, programs which serve primarily single refugees, childless couples, or couples with adult children. We believe that the provisions contained in this rule promote better, more timely support for refugees. We expect this to strengthen families as they will receive a better economic start in the U.S. and move toward self-sufficiency in a more supportive environment.

F. Executive Order 13132

Executive Order 13132 on Federalism applies to policies that have federalism implications, defined as ''regulations, legislative comments or proposed legislation, and other policy statements or actions that have substantial direct effects on the States, on the relationship between the national government and the States, or on the distribution of power and responsibilities among the various levels of government.'' This rule does not have federalism implications as defined in the Executive Order. The impact of this rule is not substantial as defined in the Executive Order. Rather, this rule provides States increased options for administering refugee resettlement programs.

G. Congressional Review of Rulemaking

This rule is not a ''major'' rule as defined in chapter 8 of 5 U.S.C.

Statutory Authority

Section 412(a)(9) of the Immigration and Nationality Act, 8 U.S.C. 1522(a)(9), authorizes the Secretary of HHS to issue regulations needed to carry out the program.

(Catalogue of Federal Domestic Programs: 93.566, Refugee and Entrant Assistance—State-Administered Programs)

List of Subjects

45 CFR Part 400

Grant programs-Social programs, Health care, Public assistance programs, Refugees, Reporting and recordkeeping requirements.

45 CFR Part 401

Cuba, Grant programs-Social programs, Haiti, Health care, Public assistance programs, Refugees.

Dated: October 14, 1999.

Olivia A. Golden,

Assistant Secretary for Children and Families.

Approved: November 22, 1999.

Donna E. Shalala,

Secretary, Department of Health and Human Services.

For reasons set forth in the preamble, 45 CFR Parts 400 and 401 are amended as follows:

PART 400—REFUGEE RESETTLEMENT PROGRAM

1. The authority citation for part 400 continues to read as follows:

Authority: Section 412(a)(9), Immigration and Nationality Act (8 U.S.C. 1522(a)(9)).

2. Section 400.2 is amended as follows:

a.–b. Removing the word ''AFDC'' wherever it appears in this section and adding in its place the word ''TANF'';

c. Removing the word ''to'' after the word ''refer'' in the definition of *case management services;*

d. Removing the definitions of *AFDC* and *Voluntary resettlement agency;* and

e. Adding in alphabetical order definitions of *Designee, Economic self-sufficiency, Family unit, Local resettlement agency, National voluntary agency, RCA Plan and TANF* to read as follows:

§ 400.2 Definitions

* * * * *

Designee, when referring to the State agency's designee, means an agency designated by the State agency for the purpose of carrying out the requirements of this part.

* * * * *

Economic self-sufficiency means earning a total family income at a level that enables a family unit to support itself without receipt of a cash assistance grant.

* * * * *

Family unit means an individual adult, married individuals without children, or parents, or custodial relatives, with minor children who are not eligible for TANF, who live in the same household.

* * * * *

Local resettlement agency means a local affiliate or subcontractor of a national voluntary agency that has entered into a grant, contract, or cooperative agreement with the United States Department of State or other appropriate Federal agency to provide for the reception and initial placement of refugees in the United States.

* * * * *

National voluntary agency means one of the national resettlement agencies or a State or local government that has entered into a grant, contract, or cooperative agreement with the United States Department of State or other appropriate Federal agency to provide for the reception and initial placement of refugees in the United States.

* * * * *

RCA Plan means a written description of the public/private RCA program administered by local resettlement agencies under contract or grant with a State.

* * * * *

TANF means temporary assistnace for needy families under title IV–A of the Social Security Act.

* * * * *

3.–10. Section 400.5 is amended in paragraph (h) by removing the words ''local affiliates of voluntary resettlement agencies'' and adding in their place the words ''local resettlement agencies'', and by adding paragraph (i) to read as follows:

§ 400.5 Content of the plan.

* * * * *

(i) Provide that the State will:

(1) Comply with the provisions of title IV, Chapter 2, of the Act and official issuances of the Director;

(2) Meet the requirements in this part;

(3) Comply with all other applicable Federal statutes and regulations in effect during the time that it is receiving grant funding; and

(4) Amend the plan as needed to comply with standards, goals, and priorities established by the Director.

§ 400.11 [Amended]

11.–12. Section 400.11 is amended in paragraph (a)(1) by removing the words ''aid to families with dependent children (AFDC)'' and adding in their place the words ''temporary assistance for needy families (TANF)'', and by revising in paragraph (b)(1) the word ''then'' to read ''than''.

13.–14. Section 400.13 is amended by adding a new paragraph (e) that reads as follows:

§ 400.13 Cost allocation.

* * * * *

(e) Administrative costs incurred by local resettlement agencies in the administration of the public/private RCA program (i.e., administrative costs of providing cash assistance) may be charged to the CMA grant. Administrative costs of managing the services component of the RCA program must be charged to the social services grant.

§ 400.23 [Amended]

15. Section 400.23 is amended in paragraph (a) by adding the words ''unless otherwise specified in this part'' after the word ''programs'', and in paragraph (b) by adding the words ''or its designee'' after the word ''State''.

§ 400.27 [Amended]

16.–17. Section 400.27 is amended in paragraph (b) by removing the words ''voluntary resettlement agency, as defined in § 400.2'' and adding in their place the words ''local resettlement agency or by a local resettlement agency to a State'', and by removing paragraph (c).

18.–19. Section 400.43 is amended by removing paragraphs (a) (2) and (5) and by redesignating paragraphs (a)(3) and (4) as paragraphs (a)(2) and (3) respectively; and by adding new paragraphs (a)(4) and (5) that read as follows:

§ 400.43 Requirements for documentation of refugee status.

(a) * * *

(4) Cuban and Haitian entrants, in accordance with requirements in 45 CFR part 401;

(5) Certain Amerasians from Vietnam who are admitted to the U.S. as immigrants pursuant to section 584 of the Foreign Operations, Export Financing, and Related Programs Appropriations Act, 1988 (as contained in section 101(e) of Public Law 100–202 and amended by the 9th proviso under Migration and Refugee Assistance in title II of the Foreign Operations, Export Financing, and Related Programs Appropriations Acts, 1989 (Public Law 100–461 as amended)); or

* * * * *

§ 400.44 [Amended]

20. Section 400.44 is amended by adding the words ''unless otherwise provided by Federal law'' after the word ''Act'' at the end of the sentence.

21. Subpart E is revised to read as follows:

Subpart E—Refugee Cash Assistance

Sec.
400.45 Requirements for the operation of an AFDC-type RCA program.
400.48 Basis and scope.
400. 49 Recovery of overpayments and correction of underpayments.
400.50 Opportunity to apply for cash assistance.
400.51 Determination of eligibility under other programs.
400.52 Emergency cash assistance to refugees.
400.53 General eligibility requirements.
400.54 Notice and Hearings.
400.55 Availability of agency policies.

Public/Private RCA Program

400.56 Structure.
400.57 Planning and consultation process.
400.58 Content and submission of public/private RCA plan.
400.59 Eligibility for the public/private RCA program.
400.60 Payment levels.
400.61 Services to public/private RCA recipients.
400.62 Treatment of eligible secondary migrants, asylees, and Cuban/Haitian entrants.
400.63 Preparation of local resettlement agencies.

Publicly-Administered RCA Programs

400.65 Continuation of a public-administered RCA program.
400.66 Eligibility and payment levels in a publicly-administered RCA program.
400.67 Non-applicable TANF requirements.
400.68 Notification to local resettlement agency.
400.69 Alternative RCA programs.

Subpart E—Refugee Cash Assistance

§ 400.45 Requirements for the operation of an AFDC-type RCA program.

This section applies to a State's RCA program that follows the State's rules under the Aid to Families with Dependent Children (AFDC) program under title IV–A of the Social Security Act, prior to amendment by Public Law 104–33. A State must continue to apply these rules to its RCA program until it implements a new RCA program under § 400.56 or § 400.65. A State that receives an approved waiver under § 400.300 to continue an AFDC-type RCA program must follow the rules in this section.

(a) *Recovery of overpayments and correction of underpayments* —The State agency must comply with regulations at § 233.20(a)(13) of this title governing recovery of overpayments and correction of underpayments in the AFDC program.

(b) *Opportunity to apply for cash assistance.* (1) A State must provide any individual wishing to do so, an opportunity to apply for cash assistance and must determine the eligibility of each applicant.

(2) In determining eligibility for cash assistance, the State must—

(i) Comply with the regulations at part 206 of this title governing applications, determinations of eligibility, and furnishing assistance under public assistance programs, as applicable to the AFDC program;

(ii) Determine eligibility for other cash assistance programs in accordance with § 400.51; and

(iii) Comply with regulations at § 400.54(a)(3) and 400.68.

(c) *Emergency cash assistance to refugees*—A State must comply with the regulations at § 400.52.

(d) *General eligibility requirements*—A State must comply with the regulations at § 400.53.

(e) *Consideration of income and resources.* In considering the income and resources of applicants for and recipients of refugee cash assistance, the State agency must:

(1) Apply the regulations at § 233.20(a)(3) through (2) of this title for considering income and resources of AFDC applicants; and

(2) Apply the regulations at § 400.66(b) through (d).

(f) *Need standards and payment levels.* (1) In determining need for refugee cash assistance, a State agency must use the State's AFDC need standards established under § 233.20(a)(1) and (2) of this title.

(2) In determining the amount of the refugee cash assistance payment to an eligible refugee who meets the standards in paragraph (f)(1) of this section and applying the consideration of income and resources in paragraph (e) of this section and in § 400.66(b) through (d), a State must pay 100 percent of the payment level which would be appropriate for an eligible filing unit of the same size under the AFDC program.

(3) The State agency may use the date of application as the date refugee cash assistance begins in order to provide payments quickly to newly arrived refugees.

(g) *Proration of shelter, utilities, and similar needs*—If a State prorated allowances for shelter, utilities, and similar needs in its AFDC program under § 233.20(a)(5) of this title, it must prorate such allowances in the same manner in its refugee assistance programs.

(h) *Other AFDC requirements applicable to refugee cash assistance*—In administering the program of refugee cash assistance, the State agency must also apply the following AFDC regulations in this title:

233.31 Budgeting methods for AFDC.

233.32 Payment and budget months (AFDC).

233.33 Determining eligibility prospectively for all payment months (AFDC).

233.34 Computing the assistance payment in the initial one or two months (AFDC).

233.35 Computing the assistance payment under retrospective budgeting after the initial one or two months (AFDC).

233.36 Monthly reporting (AFDC)—which shall apply to recipients of refugee cash assistance who have been in the United States more than 6 months.

233.37 How monthly reports are treated and what notices are required (AFDC).

235.110 Fraud.

General

§ 400.48 Basis and scope.

This subpart sets forth requirements concerning grants to States under section 412(e) of the Act for refugee cash assistance (RCA). Sections 400.48 through 400.55 apply to both public/private RCA programs and publicly-administered RCA programs.

§ 400.49 Recovery of overpayments and correction of underpayments.

The State agency or its designee agency(s) must maintain a procedure to ensure recovery of overpayments and correction of underpayments in the RCA program.

§ 400.50 Opportunity to apply for cash assistance.

(a) A State or its designee agency(s) must provide any individual wishing to do so, an opportunity to apply for cash assistance and must determine the eligibility of each applicant as promptly as possible within no more than 30 days from the date of application.

(b) A State or its designee agency(s) must inform applicants about the eligibility requirements and the rights and responsibilities of applicants and recipients under the program.

(c) In determining eligibility for cash assistance, the State or its designee agency(s) must promptly refer elderly or disabled refugees and refugees with dependent children to other cash assistance programs to apply for assistance in accordance with § 400.51.

§ 400.51 Determination of eligibility under other programs.

(a) TANF. For refugees determined ineligible for cash assistance under the TANF program, the State or its designee must determine eligibility for refugee cash assistance in accordance with §§ 400.53 and 400.59 in the case of the public/private RCA program or §§ 400.53 and 400.66 in the case of a publicly-administered RCA program.

(b) Cash assistance to the aged, blind, and disabled. (1) SSI. (i) The State agency or its designee must refer refugees who are 65 years of age or older, or who are blind or disabled, promptly to the Social Security Administration to apply for cash assistance under the SSI program.

(ii) If the State agency or its designee determines that a refugee who is 65 years of age or older, or blind or disabled, is eligible for refugee cash assistance, it must furnish such assistance until eligibility for cash assistance under the SSI program is determined, provided the conditions of eligibility for refugee cash assistance continue to be met.

(2) OAA, AB, APTD, or AABD. In Guam, Puerto Rico, and the Virgin Islands —

(i) Eligibility for cash assistance under the OAA, AB, APTD, or AABD program must be determined for refugees who are 65 years or older, or who are blind or disabled; and

(ii) If a refugee who is 65 years of age or older, or blind or disabled, is determined to be eligible for refugee cash assistance, such assistance must be furnished until eligibility for cash assistance under the OAA, AB, APTD, or AABD program is determined, provided the conditions of eligibility for refugee cash assistance continue to be met.

§ 400.52 Emergency cash assistance to refugees.

If the State agency or its designee determines that a refugee has an urgent need for cash assistance, it should process the application for cash assistance as quickly as possible and issue the initial payment to the refugee on an emergency basis.

§ 400.53 General eligibility requirements.

(a) Eligibility for refugee cash assistance is limited to those who—

(1) Are new arrivals who have resided in the U.S. less than the RCA eligibility period determined by the ORR Director in accordance with § 400.211;

(2) Are ineligible for TANF, SSI, OAA, AB, APTD, and AABD programs;

(3) Meet immigration status and identification requirements in subpart D

of this part or are the dependent children of, and part of the same family unit as, individuals who meet the requirements in subpart D, subject to the limitation in § 400.208 with respect to nonrefugee children; and

(4) Are not full-time students in institutions of higher education, as defined by the Director.

(b) A refugee may be eligible for refugee cash assistance under this subpart during a period to be determined by the Director in accordance with § 400.211.

§ 400.54 Notice and hearings.

(a) *Timely and adequate notice.* (1) A written notice must be sent or provided to a recipient at least 10 days before the date upon which refugee cash assistance will be reduced, suspended, or terminated.

(2) In providing notice to an applicant or recipient to indicate that assistance has been authorized, denied, reduced, suspended, or terminated, the written notice must clearly state the action that will be taken, the reasons for the action, and the right to request a hearing.

(3) In providing notice to an applicant or recipient to indicate that assistance has been authorized, denied, reduced, suspended, or terminated, the State or its designee agency(s) must specify the program(s) to which the notice applies, clearly distinguishing between RCA and other assistance programs. For example, in the case of a publicly-administered program, if a refugee applies for assistance and is determined ineligible for TANF but eligible for refugee cash assistance, the notice to the applicant must specify clearly the determinations with respect both to TANF and to refugee cash assistance. When a recipient of refugee cash assistance is notified of termination because of reaching the time limit on such assistance, the State or its designee must review the case file to determine possible eligibility for TANF or GA due to changed circumstances and the notice to the recipient must indicate the result of that determination as well as the termination of RCA.

(b) *Hearings.* All applicants for and recipients of refugee cash assistance must be provided an opportunity for a hearing to contest adverse determinations. States must ensure that hearings meet the due process standards in *Goldberg* v. *Kelly,* 397 U.S. 254 (1970).

(1) *Public/private RCA programs.* The State must specify in the public/private RCA plan the hearing procedures to be used in the RCA program. The plan may specify that the local resettlement agency(s) will refer all hearing requests to a State-administered hearing process. If the plan does not specify the use of a State-administered hearing process, then the procedures to be followed must include:

(i) The State or local resettlement agency(s) responsible for the provision of RCA must provide an applicant for or recipient of refugee cash assistance an opportunity for an oral hearing to contest adverse determinations. Hearings must be conducted by an impartial official or designee of the State or local resettlement agency who has not been involved directly in the initial determination of the action in question.

(ii) The State must ensure that procedures are established to provide refugees a right of final appeal for an in-person hearing provided by an impartial, independent entity outside of the local resettlement agency.

(iii) Final administrative action must be taken within 60 days from the date of a request for a hearing.

(2) *Publicly-administered RCA programs.* The State must specify in the State Plan referenced in § 400.4 the public agency hearing procedures it intends to use in the RCA program.

(3) In both a public/private RCA program and a publicly-administered RCA program, the written notice of any hearing determination must adequately explain the basis for the decision and the refugee's right to request any further administrative or judicial review.

(4) In both a public/private RCA program and a publicly-administered RCA program, a refugee's benefits may not be terminated prior to completion of final administrative action, but are subject to recovery by the agency if the action is sustained.

(5) In both a public/private RCA program and a publicly-administered RCA program, a hearing need not be granted when Federal law requires automatic grant adjustments for classes of recipients unless the reason for an individual appeal is an incorrect grant computation.

(6) In both a public/private RCA program and a publicly-administered RCA program, a hearing need not be granted when assistance is terminated because the eligibility time period imposed by law has been reached, unless there is a disputed issue of fact that is unresolved by the process in § 400.23.

§ 400.55 Availability of agency policies.

A State, or the agency(s) responsible for the provision of RCA, must make available to refugees the written policies of the RCA program, including agency policies regarding eligibility standards, the duration and amount of cash assistance payments, the requirements for participation in services, the penalties for non-cooperation, and client rights and responsibilities to ensure that refugees understand what they are eligible for, what is expected of them, and what protections are available to them. The State, or the agency(s) responsible for the provision of RCA, must ensure that agency policy materials and all notices required in §§ 400.54, 400.82, and 400.83, are made available in written form in English and in appropriate languages where a significant number or proportion of the recipient population needs information in a particular language. In regard to refugee language groups that constitute a small number or proportion of the recipient population, the State, or the agency(s) responsible for the provision of RCA, at a minimum, must use an alternative method, such as verbal translation in the refugee's native language, to ensure that the content of the agency's policies is effectively communicated to each refugee.

Public/Private RCA Program

§ 400.56 Structure.

(a) States may choose to enter into a partnership agreement with local resettlement agencies for the operation of a public/private RCA program. Sections 400.56 through 400.63 apply to the public/private RCA program.

(b) The public/private RCA program must be administered by the State through contracts or grants with local resettlement agencies or a lead resettlement agency that provides initial resettlement services under the terms of the Department of State Cooperative Agreement for Reception and Placement.

(c) The public/private RCA program must be statewide, unless the State determines that it is not in the best interests of refugees to provide a public/private RCA program in a particular area of the State.

(d) Local resettlement agencies may be responsible for determining eligibility, and authorizing and providing payments to eligible refugees.

(e) States and local resettlement agencies may not propose to operate a public/private RCA program and a publicly-administered RCA program in the same geographic location.

(f) States must ensure the provision of RCA assistance to eligible refugees in the State who are sponsored by local resettlement agencies in bordering states, where applicable.

§ 400.57 Planning and consultation process.

A State that wishes to establish a public/private RCA program must engage in a planning and consultation process with the local agencies that resettle refugees in the State to develop a public/private RCA plan in accordance with the requirements under § 400.58.

(a) Primary participants in the planning process must include representatives of the State and each local agency that resettles refugees in the State. During the planning process, the State must fully consult with representatives of counties, refugee mutual assistance associations (MAAs), local community services agencies, national voluntary agencies that resettle refugees in the State, representatives of each refugee ethnic group, and other agencies that serve refugees.

(b) Each local resettlement agency that resettles refugees in the State must inform its national resettlement agency of the proposed public/private RCA program and must obtain a letter of agreement from the national agency that indicates that the national agency supports the public/private RCA plan and will continue to place refugees in the State under the public/private RCA program.

§ 400.58 Content and submission of public/private RCA plan.

(a) States and local resettlement agencies must develop a public/private RCA plan which describes how the State and local resettlement agencies will administer and provide refugee cash assistance to eligible refugees. The plan must describe the agreed-upon public/private RCA program including:

(1) The proposed income standard to be used to determine RCA eligibility;

(2) The proposed payment levels to be used to provide cash assistance to eligible refugees;

(3) Assurance that the payment levels established are not lower than the comparable State TANF amounts;

(4) A detailed description of how benefit payments will be structured, including a description of employment incentives and/or income disregards to be used, if any, as well as methods of payment to be used, such as direct cash or vendor payments;

(5) A description of how all RCA eligible refugees residing in the State will have reasonable access to cash assistance and services;

(6) A description of the procedures to be used to ensure appropriate protections and due process for refugees, such as the correction of underpayments, notice of adverse action and the right to mediation, a pre-termination hearing, and an appeal to an independent entity;

(7) A description of proposed exemptions from participation in employability services;

(8) A description of the employment and self-sufficiency services to be provided to RCA recipients by—

(i) Local resettlement agencies under contract or grant, and/or

(ii) Other refugee services providers;

(9) Procedures for providing RCA to eligible secondary migrants who move to the State, including secondary migrants who were sponsored by a local resettlement agency that does not have a presence in the receiving State;

(10) If applicable, provisions for providing assistance to refugees resettling in the State who are sponsored by a local resettlement agency in a bordering State which does not have an office in the State of resettlement;

(11) A description of the procedures to be used to safeguard the disclosure of information regarding refugee clients;

(12) Letters of agreement from the national voluntary resettlement agencies that indicate support for the proposed public/private RCA program and indicate that refugee placements in the State will continue under the public/private RCA program;

(13) A breakdown of the proposed program and administrative costs of both the cash assistance and service components of the public/private RCA program, including any per capita caps on administrative costs only if a State proposes to use such caps; and

(14) The proposed implementation date for the State's public/private RCA program;

(b) In cases where the State, after consultation with the local resettlement agencies in the State, determines that a public/private RCA program is not feasible statewide and proposes to implement a public/private RCA program in only a portion of the State and to operate a publicly-administered RCA program in the balance of the State, the State's RCA plan must include the information required in § 400.65(b).

(c) The plan must be signed by the Governor or his or her designee.

(d) The Director of ORR will follow the procedures in § 400.8 for the approval of public/private RCA plans. An approved public/private RCA plan will be incorporated into the refugee program State Plan.

(e) Any amendments to the public/private RCA plan must be developed in consultation with the local resettlement agencies and must be submitted to ORR in accordance with § 400.8. The Director of ORR will follow the procedures in § 400.8 for approval of amendments to public/private RCA plans.

§ 400.59 Eligibility for the public/private RCA program.

(a) Eligibility for refugee cash assistance under the public/private program is limited to those who meet the income eligibility standard established by the State after consultation with local resettlement agencies in the State.

(b) Any resources remaining in the applicant's country of origin may not be considered in determining income eligibility.

(c) A sponsor's income and resources may not be considered to be accessible to a refugee solely because the person is serving as a sponsor.

(d) Any cash grant received by a refugee under the Department of State or Department of Justice Reception and Placement programs may not be considered in determining income eligibility.

§ 400.60 Payment levels.

(a) Under the public/private RCA program, States and the local resettlement agencies contracted or awarded grants to administer the RCA program must make monthly cash assistance payments to eligible refugees that do not exceed the following payment ceilings, according to the number of persons in the family unit, except as noted in paragraphs (b) and (c) of this section. For family units greater than 4 persons, the payment ceiling may be increased by $70 for each additional person.

Size of family unit	Monthly payment ceiling
1 person	$335
2 persons	450
3 persons	570
4 persons	685

(b) States and local resettlement agencies may not make payments to refugees that are lower than the State's TANF payment for the same sized family unit. In States that have TANF payment levels that are higher than the ceilings established in this section, States and local resettlement agencies must provide payment levels under the public/private RCA program that are comparable to the State's TANF payment levels.

(c) Income disregards and other incentives. (1) States and local resettlement agencies may design an assistance program that combines RCA payments with income disregards or

other incentives such as employment bonuses, or graduated payments in order to encourage early employment and self-sufficiency, as long as the total combined payments to a refugee do not exceed the ORR monthly ceilings established in this section multiplied by the allowable number of months of RCA eligibility.

(2) States that elect to exceed monthly payment ceilings in order to provide employment incentives must budget their resources to ensure that sufficient RCA funds are available to cover a refugee's cash assistance needs in the latter months of a refugee's eligibility period, if needed.

(d) If the Director determines that the payment ceilings need to be adjusted for inflation, the Director will publish a document in the **Federal Register** announcing the new payment ceilings.

§ 400.61 Services to public/private RCA recipients.

(a) Services provided to recipients of refugee cash assistance in the public/private RCA program may be provided by the local resettlement agencies that administer the public/private RCA program or by other refugee service agencies.

(b) Allowable services under the public/private program are limited to those services described in §§ 400.154 and 400.155 and are to be funded in accordance with § 400.206.

(c) In public/private programs in which local resettlement agencies are responsible for administering both cash assistance and services, States and local resettlement agencies must coordinate on a regular basis with refugee mutual assistance associations and other ethnic representatives that represent or serve the ethnic populations that are being resettled in the U.S. to ensure that the services provided under the public/private RCA program:

(1) Are appropriate to the linguistic and cultural needs of the incoming populations; and

(2) Are coordinated with the longer-term resettlement services frequently provided by ethnic community organizations after the end of the time-limited RCA eligibility period.

(d) In public/private programs in which the agencies responsible for providing services to RCA recipients are not the same agencies that administer the cash assistance program, the State must:

(1) Establish procedures to ensure close coordination between the local resettlement agencies that provide cash assistance and the agencies that provide services to RCA recipients; and

(2) Set up a system of accountability that identifies the responsibilities of each participating agency and holds these agencies accountable for the results of the program components for which they are responsible.

§ 400.62 Treatment of eligible secondary migrants, asylees, and Cuban/Haitian entrants.

The State and local resettlement agencies must establish procedures to ensure that eligible secondary migrant refugees, asylees, and Cuban/Haitian entrants have access to public/private RCA assistance if they wish to apply. In developing these procedures, consideration must be given to ensuring coverage of eligible secondary migrants and other eligible applicants who were sponsored by a resettlement agency which does not have a presence in the State or who were not sponsored by any agency.

§ 400.63 Preparation of local resettlement agencies.

The State and the national voluntary agencies whose affiliate agencies will be responsible for implementing the public/private RCA program:

(a) Must determine the training needed to enable local resettlement agencies to achieve a smooth implementation of the RCA program; and

(b) Must provide the training in a uniform way to ensure that all local resettlement agencies in the State will implement the public/private RCA program in a consistent manner.

Publicly-Administered RCA Programs

§ 400.65 Continuation of a publicly-administered RCA program.

Sections 400.65 through 400.69 apply to publicly-administered RCA programs. If a State chooses to operate a publicly-administered RCA program:

(a) The State may operate its refugee cash assistance program consistent with its TANF program.

(b) The State must submit an amendment to its State Plan, describing the elements of its TANF program that will be used in its refugee cash assistance program.

§ 400.66 Eligibility and payment levels in a publicly-administered RCA program.

(a) In administering a publicly-administered refugee cash assistance program, the State agency must operate its refugee cash assistance program consistent with the provisions of its TANF program in regard to:

(1) The determination of initial and on-going eligibility (treatment of income and resources, budgeting methods, need standard);

(2) The determination of benefit amounts (payment levels based on size of the assistance unit, income disregards);

(3) Proration of shelter, utilities, and similar needs; and

(4) Any other State TANF rules relating to financial eligibility and payments.

(b) The State agency may not consider any resources remaining in the applicant's country of origin in determining income eligibility.

(c) The State agency may not consider a sponsor's income and resources to be accessible to a refugee solely because the person is serving as a sponsor.

(d) The State agency may not consider any cash grant received by the applicant under the Department of State or Department of Justice Reception and Placement programs.

(e) The State agency may use the date of application as the date refugee cash assistance begins in order to provide payments quickly to newly arrived refugees.

§ 400.67 Non-applicable TANF requirements.

States that choose to operate an RCA program modeled after TANF may not apply certain TANF requirements to refugee cash assistance applicants or recipients as follows: TANF work requirements may not apply to RCA applicants or recipients, and States must meet the requirements in subpart I of this part with respect to the provision of services for RCA recipients.

§ 400.68 Notification to local resettlement agency.

(a) The State must notify promptly the local resettlement agency which provided for the initial resettlement of a refugee whenever the refugee applies for refugee cash assistance under a publicly-administered RCA program.

(b) The State must contact the applicant's sponsor or the local resettlement agency concerning offers of employment and inquire whether the applicant has voluntarily quit employment or has refused to accept an offer of employment within 30 consecutive days immediately prior to the date of application, in accordance with § 400.77(a).

§ 400.69 Alternative RCA programs.

A State that determines that a public/private RCA program or a publicly-administered program modeled after its TANF program is not the best approach for the State may choose instead to establish an alternative approach under the Wilson/Fish program, authorized by section 412(e)(7) of the INA.

§ 400.70 [Amended]

22. Section 400.70 is amended by adding the words ''under both the public/private RCA program and the publicly-administered RCA program'' after the word ''assistance'' and before the word ''concerning''.

§ 400.71 [Amended]

23. Section 400.71 is amended by removing the definition of the term Designee.

24. Section 400.72 is amended by adding introductory text to read as follows:

§ 400.72 Arrangements for employability services.

Paragraphs (a) and (b) of this section apply equally to States that operate a public/private RCA program and to States that operate a publicly-administered RCA program. Paragraph (c) applies only to publicly-administered RCA programs.

* * * * *

§ 400.75 [Amended]

25. Section 400.75 is amended by adding in paragraph (a)(6)(i) the word ''local'' before the words ''resettlement agency'', and by adding in paragraph (b) the words ''or its designee'' after the words ''State agency''.

26.–27. Section 400.76 is revised to read as follows:

§ 400.76 Criteria for exemption from registration for employment services, participation in employability service programs, and acceptance of appropriate offers of employment.

States and local resettlement agencies operating a public/private RCA program, as well as States operating a publicly-administered RCA program, may determine what specific exemptions, if any, are appropriate for recipients of a time-limited RCA program in their State.

§ 400.77 [Amended]

28. Section 400.77(a) is amended by removing the words ''§ 400.82(b)(3)(ii)'' and adding in their place the words ''§ 400.82(c)(2).''

§ 400.78 [Removed]

29. Section 400.78 is removed.

§ 400.79 [Amended]

30. Section 400.79 is amended as follows:

a. By removing in paragraph (a) the word ''filing'' and adding in its place the word ''family'' before the word ''unit'';

b. By adding in paragraph (b) the word ''local'' before the words ''resettlement agency''; and

c. By adding the word ''and'' at the end of the paragraph (c)(1) and by removing the semicolon and the word ''and'' at the end of paragraph (c)(2) and adding in their place a period.

§ 400.80 [Removed]

31.–33. Section 400.80 and the undesignated centerhead immediately preceding it are removed.

34. Section 400.81 is amended as follows:

a. By removing the word ''AFDC'' and adding in its place the word ''TANF'' in paragraphs (a) introductory text and (a)(4);

b. By adding a sentence at the end of paragraph (b) that reads: ''This training may only be made available to individuals who are employed.''; and

c. By revising paragraph (c) to read as follows:

§ 400.81 Criteria for appropriate employability services and employment.

* * * * *

(c) A job offered, if determined appropriate under the requirements of this subpart, is required to be accepted by the refugee without regard to whether such job would interrupt a program of services planned or in progress unless the refugee is currently participating in a program *in progress* of on-the-job training (as described in § 400.154(c)) or vocational training (as described in § 400.154(e)) which meets the requirements of this part and which is being carried out as part of an approved employability plan.

34.–38. Section 400.82 is amended by redesignating paragraph (b)(3) as (c) and by redesignating paragraphs (b)(3)(i) and (ii) as (c)(1) and (2) respectively, and by revising paragraphs (a) and (b) to read as follows:

§ 400.82 Failure or refusal to accept employability services or employment.

(a) *Termination of assistance.* When, without good cause, an employable non-exempt recipient of refugee cash assistance under the public/private RCA program or under a publicly-administered RCA program has failed or refused to meet the requirements of § 400.75(a) or has voluntarily quit a job, the State, or the agency(s) responsible for the provision of RCA, must terminate assistance in accordance with paragraphs (b) and (c) of this section.

(b) *Notice of intended termination*—(1) In cases of proposed action to reduce, suspend, or terminate assistance, the State or the agency(s) responsible for the provision of RCA, must give timely and adequate notice, in accordance with adverse action procedures required at § 400.54.

(2) The State, or the agency(s) responsible for the provision of RCA, must provide written procedures in English and in appropriate languages, in accordance with requirements in § 400.55, for the determination of good cause, the sanctioning of refugees who do not comply with the requirements of the program, and for the filing of appeals by refugees.

(3) In addition to the requirements in § 400.54, the written notice must include—

(i) An explanation of the reason for the action and the proposed adverse consequences; and

(ii) Notice of the recipient's right to mediation and a hearing under § 400.83.

(4) A written notice in English and a written translated notice, or a verbal translation of the notice, in accordance with the requirements in § 400.55, must be sent or provided to a refugee at least 10 days before the date upon which the action is to become effective.

* * * * *

40. Section 400.83 is revised to read as follows:

§ 400.83 Mediation and fair hearings.

(a) *Mediation.* (1) *Public/private RCA program.* The State must ensure that a mediation period prior to imposition of sanctions is provided to refugees by local resettlement agencies under the public/private RCA program. Mediation shall begin as soon as possible, but no later than 10 days following the date of failure or refusal to participate, and may continue for a period not to exceed 30 days. Either the State (or local resettlement agency(s) responsible for the provision of RCA) or the recipient may terminate this period sooner when either believes that the dispute cannot be resolved by mediation.

(2) *Publicly-administered RCA programs.* Under a publicly-administered RCA program, the State must use the same procedures for mediation/conciliation as those used in its TANF program, if available.

(b) *Hearings.* The State or local resettlement agency(s) responsible for the provision of RCA must provide an applicant for, or recipient of, refugee cash assistance an opportunity for a hearing, using the same procedures and standards set forth in § 400.54, to contest a determination concerning employability, or failure or refusal to carry out job search or to accept an appropriate offer of employability services or employment, resulting in denial or termination of assistance.

§ 400.93 [Amended]

41. Section 400.93(d) is amended to add the words ''or the State Children's Health Insurance Program (SCHIP)'' after the word ''Medicaid'' each time it appears.

§ 400.94 [Amended]

42. Section 400.94 is amended:

a. By adding in paragraph (a) the words ''and SCHIP'' before the word ''eligibility'' and by removing the words ''State plan'' and adding in their place the words ''and SCHIP State plans'';

b. By adding in paragraph (c) the words ''and SCHIP'' after the word ''Medicaid''; by removing the word ''program'' and adding in its place the word ''programs''; and by removing the word ''plan'' and adding in its place the word ''plans''; and

c. By adding in paragraph (d) the words ''or SCHIP'' after the word ''Medicaid'' and by deleting the word ''plan'' and adding in its place the word ''plans''.

§ 400.100 [Amended]

43–45. Section 400.100 is amended:

a. By adding in paragraph (a)(i) the words ''or SCHIP'' after the word ''Medicaid'';

b. By removing in paragraph (a)(2) the word ''filing'' and adding in its place the word ''assistance'' before the word ''unit'';

c. By removing paragraph (a)(4) and redesignating paragraphs (a)(5) and (a)(6) as (a)(4) and (a)(5) respectively; and

d. By adding in paragraph (d) the words ''or SCHIP'' after the word ''Medicaid''.

46–49. Section 400.101 is amended by revising paragraphs (a) and (b) to read as follows:

§ 400.101 Financial eligibility standards.

* * * * *

(a) In States with medically needy programs under 42 CFR part 435, subpart D:

(1) The State's medically needy financial eligibility standards established under 42 CFR part 435, subpart I, and as reflected in the State's approved title XIX State Medicaid plan; or

(2) A financial eligibility standard established at up to 200% of the national poverty level; and

(b) In States without a medically needy program:

(1) The State's AFDC payment standards and methodologies in effect as of July 16, 1996, including any modifications elected by the State under section 1931(b)(2) of the Social Security Act; or

(2) A financial eligibility standard established at up to 200% of the national poverty level.

50. Section 400.102 is revised to read as follows:

§ 400.102 Consideration of income and resources.

(a) Except as specified in paragraphs (b), (c), and (d) of this section, in considering financial eligibility of applicants for refugee medical assistance, the State agency must—

(1) In States with medically needy programs, use the standards governing determination of income eligibility in 42 CFR 435.831, and as reflected in the State's approved title XIX State Medicaid plan.

(2) In States without medically needy programs, use the standards and methodologies governing consideration of income and resources of AFDC applicants in effect as of July 16, 1996, including any modifications elected by the State under section 1931(b)(2) of the Social Security Act.

(b) The State may not consider in-kind services and shelter provided to an applicant by a sponsor or local resettlement agency in determining eligibility for and receipt of refugee medical assistance.

(c) The State may not consider any cash assistance payments provided to an applicant in determining eligibility for and receipt of refugee medical assistance.

(d) The State must base eligibility for refugee medical assistance on the applicant's income and resources on the date of application. The State agency may not use the practice of averaging income prospectively over the application processing period in determining income eligibility for refugee medical assistance.

51. Section 400.103 is revised to read as follows:

§ 400.103 Coverage of refugees who spend down to State financial eligibility standards.

States must allow applicants for RMA who do not meet the financial eligibility standards elected in § 400.101 to spend down to such standard using an appropriate method for deducting incurred medical expenses.

52. Section 400.104 is revised to read as follows:

§ 400.104 Continued coverage of recipients who receive increased earnings from employment.

(a) If a refugee who is receiving refugee medical assistance receives earnings from employment, the earnings shall not affect the refugee's continued medical assistance eligibility.

(b) If a refugee, who is receiving Medicaid and has been residing in the U.S. less than the time-eligibility period for refugee medical assistance, becomes ineligible for Medicaid because of earnings from employment, the refugee must be transferred to refugee medical assistance without an RMA eligibility determination.

(c) Under paragraphs (a) and (b) of this section, a refugee shall continue to receive refugee medical assistance until he/she reaches the end of his or her time-eligibility period for refugee medical assistance, in accordance with § 400.100(b).

(d) In cases where a refugee is covered by employer-provided health insurance, any payment of RMA for that individual must be reduced by the amount of the third party payment.

§ 400.107 [Amended]

53. Section 400.107(b) is amended by removing the word ''assessment'' and adding in its place the word ''screening''.

§ 400.152 [Amended]

54. Section 400.152(b) is amended by adding the words ''citizenship and naturalization preparation services and'' after the words ''except for'' and by placing a period after the words ''60 months'' and removing the rest of the sentence.

55. Section 400.154 is amended by removing in paragraph (j) the word ''AFDC'' and adding in its place the word ''TANF'' and by adding a new paragraph (k) to read as follows:

§ 400.154 Employability services.

* * * * *

(k) Assistance in obtaining Employment Authorization Documents (EADs).

§ 400.155 [Amended]

56–57. Section 400.155 is amended by adding a new paragraph (i) that reads as follows:

§ 400.155 Other services.

* * * * *

(i) Citizenship and naturalization preparation services, including English language training and civics instruction to prepare refugees for citizenship, application assistance for adjustment to legal permanent resident status and citizenship status, assistance to disabled refugees in obtaining disability waivers from English and civics requirements for naturalization, and the provision of interpreter services for the citizenship interview.

§ 400.203 [Amended]

58. Section 400.203(a)(1) is amended by removing the word ''AFDC'' and adding in its place the word ''TANF''.

§ 400.207 [Amended]

59. Section 400.207 is amended by adding a sentence after the word ''Families'' that reads: ''Such costs may include reasonable and necessary administrative costs incurred by local resettlement agencies in providing assistance and services under a public/private RCA program.'' and by removing the word ''Such'' in the last sentence and adding in its place the word ''Administrative''.

§ 400.208 [Amended]

60. Section 400.208 is amended by removing the word ''filing'' whenever it appears and adding in its place the word ''family'' before the word ''unit''.

§ 400.209 [Amended]

61. Section 400.209 is amended by removing the word ''filing'' wherever it appears and by adding in its place the word ''family'' before the word ''unit'' and by removing the word ''AFDC'' in paragraph (a) and adding in its place the word ''TANF''.

62. Section 400.210 is amended by revising paragraph (b)(2) to read as follows:

§ 400.210 Time limits for obligating and expending funds and for filing State claims.

* * * * *

(b) * * *

(2) A State must expend its social service and targeted assistance grants no later than two years after the end of the FFY in which the Department awards the grant. A State's final financial report on expenditures of social services and targeted assistance grants must be received no later than 90 days after the end of the two-year expenditure period. At that time, if a State's final financial expenditure report has not been received, the Department will deobligate any unexpended funds, including any unliquidated obligations, based on a State's last submitted financial report.

§ 400.211 [Amended]

63. Section 400.211(a) is amended:

a. By removing in paragraph (a) introductory text the word ''necessary'' and adding in its place the words ''a reduction in the eligibility period is indicated'' after the word ''if'';

b. By removing in paragraph (a)(2) the word ''member'' and adding in its place the word ''number'' after the word ''annual'';

c. By removing in paragraph (a)(3) the word ''AFDC'' wherever it appears; and

d. By removing in paragraph (b) the word ''impleting'' and adding in its place the word ''implementing''.

§ 400.301 [Amended]

64.–67. Section 400.301 is amended:

a. By removing in paragraph (b) the words ''only under extraordinary circumstances and'' after the word ''granted'';

b. By adding in paragraph (c) the following sentence after the words ''subpart L'': ''Replacement designees must also adhere to the Subpart L regulations regarding formula allocation grants for targeted assistance, if the State authorized the replacement designee appointed by the Director to act as its agent in applying for and receiving targeted assistance funds''; and

c. By removing in paragraph (c) the words ''400.55(b)(2), 400.56(a)(1), 400.56(a)(2), 400.56(b)(2)(i)'' and adding in their place the words ''400.51 (b)(2)(i) and 400.58(c)''.

PART 401—CUBAN/HAITIAN ENTRANT PROGRAM

1. The authority citation for Part 401 continues to read as follows:

Authority: Section 501(a), Pub. L. 96–422, 94 Stat. 1810 (8 U.S.C. 1522 note); Executive Order 12341 (January 21, 1982).

§ 401.12 [Amended]

2. Section 401.12(a) is amended by removing the word ''§ 400.62'' and adding in its place the words ''subparts E and G of part 400 of this title''.

[FR Doc. 00–6848 Filed 3–21–00; 8:45 am]

BILLING CODE 4184–01–U

Federal Register

Wednesday,
March 22, 2000

Part III

Department of Housing and Urban Development

24 CFR Parts 401 and 402

Multifamily Housing Mortgage and Housing Assistance Restructuring Program (Mark-to-Market); Final Rule

DEPARTMENT OF HOUSING AND URBAN DEVELOPMENT

24 CFR Parts 401 and 402

[Docket No. FR–4298–F–07]

RIN 2502–AH09

Multifamily Housing Mortgage and Housing Assistance Restructuring Program (Mark-to-Market)

AGENCY: Office of Multifamily Housing Assistance Restructuring, HUD.

ACTION: Final rule.

SUMMARY: This final rule implements the Mark-to-Market Program through which section 8 rents for multifamily projects with HUD-insured or HUD-held mortgages will be reduced. Currently, the Program is operating under the authority of an interim rule that took effect on October 11, 1998. The purpose of the Program is to preserve low-income rental housing affordability while reducing the long-term costs of Federal rental assistance, including project-based assistance, and minimizing the adverse effect on the FHA insurance funds. A separate final rule will be published for those sections of the interim rule that govern renewal of section 8 project-based assistance contracts for projects outside of the Mark-to-Market Program.

EFFECTIVE DATE: April 21, 2000.

FOR FURTHER INFORMATION CONTACT: Dan Sullivan, Public Policy Analyst, Office of Multifamily Assistance Restructuring, Department of Housing and Urban Development, 1280 Maryland Ave., Suite 4000, Washington DC 20024, 202–708–0001. (This is not a toll-free number.) For hearing-and speech-impaired persons, this number may be accessed via TTY by calling the Federal Information Relay Service at 1–800–877–8339.

SUPPLEMENTARY INFORMATION:

I. Background
II. Comments Received on Part 401
III. Changes Made to Part 401 in Final Rule
IV. Findings and Certifications

I. Background

A. Mark-to-Market

HUD issued an interim rule on September 11, 1998 (63 FR 48926) to implement subtitles A and D of MAHRA (the Multifamily Assisted Housing Reform and Affordability Act of 1997, title V of Pub. L. 105–65 (approved October 27, 1997), 42 U.S.C. 1437f note.

MAHRA authorized a new Mark-to-Market Program designed to preserve low-income rental housing affordability while reducing the long-term costs of Federal rental assistance, including project-based assistance from HUD, for certain multifamily rental projects. The projects involved are projects with: (1) HUD-insured or HUD-held mortgages; and (2) contracts for project-based rental assistance from HUD, primarily through the section 8 program, for which the average rents for assisted units exceed the rent of comparable properties. The program objectives will be accomplished by (1) reducing project rents to no more than comparable market rents (with certain exceptions discussed below), (2) restructuring the HUD-insured or HUD-held financing so that the monthly payments on the first mortgage can be paid from the reduced rental levels, (3) performing any needed rehabilitation of the project, and (4) ensuring competent management of the project. The restructured project will be subject to long-term use and affordability restrictions.

MAHRA is intended to provide a long-term solution to the rapidly growing cost to the Federal Government of assisting affordable rental housing. Over 900,000 housing units in approximately 10,000 multifamily projects have been financed with FHA-insured mortgages and supported by project-based section 8 housing assistance payment (HAP) contracts. In many cases, these HAP contracts currently provide for rents for assisted units that substantially exceed the rents for comparable unassisted units in the local market. Starting in Fiscal Year 1996, those contracts began to expire, and Congress and the Administration began providing 1-year extensions of expiring contracts. While annual HAP contract extensions for these projects maintained an important affordable housing resource, they came at great expense. Every year more contracts expired, compounding the cost of annual extensions.

To begin to address this growing problem, Congress authorized demonstration programs beginning with section 210 of the Departments of Veterans Affairs and Housing and Urban Development, and Independent Agencies Appropriations Act, 1996 (see HUD notices regarding the demonstrations published at 61 FR 34664 (July 2, 1996), 61 FR 28757 (July 25, 1996), 62 FR 3566, (January 23, 1997) and 63 FR 36130, (July 1, 1998)). MAHRA builds on the demonstration programs with similar objectives and many similar provisions, but also some significant differences.

Organizationally, MAHRA established within HUD a new Office of Multifamily Housing Assistance Restructuring (OMHAR) to develop and actively manage, administer, and oversee the Mark-to-Market Program through a decentralized structure of Participating Administrative Entities (PAEs). OMHAR has established the framework of the Program through an interim rule, this final rule, and an Operating Procedures Guide, and is managing the program by selecting and monitoring Participating Administrative Entities (PAEs). In recognition of limited HUD resources, MAHRA gives PAEs the role of negotiating with the owners of individual projects and developing the Mortgage Restructuring and Rental Sufficiency Plans (Restructuring Plans) that will establish the future responsibilities of the owner, the PAE and HUD for projects that are marked-to-market. MAHRA also contains substantive differences from the previous demonstrations. For example, it includes projects with HUD-held mortgages in addition to HUD-insured mortgages and requires a second mortgage with deferred payment from net cash flow after accounting for all project expenses.

The preamble to the interim rule outlined implementation steps taken through September 11, 1998. Since then, the Senate confirmed President Clinton's appointment of Ira G. Peppercorn as the Director of OMHAR. OMHAR is currently hiring staff, and has established its Headquarters at 1280 Maryland Avenue SW, Suite 4000, Washington D.C. 20024. OMHAR Regional Offices have been established in New York, Chicago, and San Francisco. A Regional Office co-located in OMHAR Headquarters has full responsibility for the Southeast.

Before publication of this final rule, HUD was required to conduct at least three public forums at which organizations representing various groups may express views concerning HUD's proposed disposition of recommendations from those groups (specifically, the recommendations for certain provisions of MAHRA that were implemented in §§ 401.200, 401.201, and 401.420 of the interim rule.) The Department conducted these forums in New York, Chicago, and San Francisco on October 1, 1998. Forum participants representing a variety of interests made presentations that expanded and clarified written comments on both the matters covered in the section identified above, and other topics related to the Department's implementation of the Mark-to-Market Program. The vast majority of the issues discussed at the forums have been raised in one or more written public comments and will be addressed in the context of the written submissions. Thus, the issues raised at

the public forums will not be independently addressed in the preamble to this final rule. Written public comments in response to the Interim Rule were due October 26, 1998. In addition to the public forums, OMHAR convened a focus group on November 18, 1998, in Washington D.C. This meeting was helpful to OMHAR in hearing discussion and debate between commenters concerning several controversial policy issues contained in the regulations.

HUD issued a Request for Qualifications (RFQ) for eligible entities interested in being Participating Administrative Entities, 63 FR 44102, August 17, 1998. A bidders conference was held August 27, 1998, and submissions were due September 16, 1998. OMHAR identified 52 Public Entity applicants and 11 Non-Public applicants as meeting the PAE technical qualifications. All Public Entity applicants were informed by January 19, 1999, and all Non-Public applicants were informed by July 2, 1999. OMHAR provided an initial technical assistance briefing for potential PAEs on January 12, and 13, 1999. OMHAR has conducted an orientation session for each PAE after its Portfolio Restructuring Agreement (PRA) was signed. Each PAE also participated in one of five 2-day technical assistance sessions addressing underwriting issues. OMHAR will conduct additional training for PAEs in the upcoming months. OMHAR is continuing to negotiate PRAs with the public PAEs that have not yet executed a PRA. OMHAR expects each asset submitted by an owner for restructuring to be allocated to a PAE by the end of 1999.

MAHRA authorizes $10 million per year of technical assistance funding to tenant and non-profit groups, and public entities. These funds will be used to build tenant capacity to participate meaningfully in the Mark-to-Market program by organizing and training (OTAG grants), and to provide technical assistance to tenants of specific Mark to Market properties (ITAG grants). The initial funding for FY 1999 was awarded through the Department's SuperNOFA process, and grant agreements were executed in January 1999. OMHAR conducted training for the ITAG and OTAG grantees on November 30, December 1, and 2, 1998.

A general brochure explaining the basic program features is being prepared and will be distributed to tenant groups and other interested stakeholders. Once published, copies may be obtained by calling the Multifamily Housing Clearinghouse at 1–800–685–8470, or downloaded from OMHAR's Webpage at http://www.hud.gov/omhar. OMHAR and the Office of Housing conducted a distance learning seesion on September 21, 1999. In addition to the training already conducted, OMHAR will be conducting distance learning and on-site training for PAEs, HUD Field Offices, and other interested parties in the upcoming months.

The Mark-to-Market Program Operating Procedures Guide has been completed and made available to the public. OMHAR will make additional information on the Mark-to-Market Program available on its Webpage. Among other information, OMHAR has provided a list of addresses of OMHAR Regional Offices with jurisdiction over the Program, a list of PAEs that have been selected, the list of assets assigned to PAEs, and a list of Intermediary Technical Assistance Grant (ITAG) and Outreach and Training Grant (OTAG) providers and contact persons for technical assistance grants related to Mark-to-Market Program restructuring.

B. Renewing Section 8 Project-Based Assistance Without Mark-to-Market Restructuring

Section 524 of MAHRA and part 402 of the interim rule authorize renewal of expiring section 8 project-based assistance contracts for projects without Restructuring Plans under the Mark-to-Market Program, including projects that are not eligible for Plans and eligible projects for which the owners request contract renewals without Plans. At this final rule stage, we are separating parts 401 and 402. Minor changes are made in this final rule to §§ 402.1, 402.4, and 402.6. The rest of interim part 402 continues in effect until other changes to part 402 are published later as a separate final rule.

C. Changes in Legislation

After MAHRA became law, Congress enacted the Departments of Veterans Affairs and Housing and Urban Development, and Independent Agencies Appropriations Act, 1999 (Pub. L. 105–276, approved October 21, 1998) and the Departments of Veterans Affairs and Housing and Urban Development, and Independent Agencies Appropriations Act 2000 (Pub. L. 106–74, approved October 20, 1999). The first law amended the underlying statutory authorization for some provisions in the interim rule. HUD issued two corrections to the interim rule, on October 15, 1998 (63 FR 55333) and December 28, 1998 (63 FR 71372). The second correction included one change to part 402 to incorporate a provision of Pub. L. 105–276. Other changes needed to reflect Pub. L. 105–276 are included in this final rule and discussed in Section III of this preamble.

Pub. L. 106–74 also changed the underlying statutory authorization for some provisions in the interim rule. The most extensive changes affect provisions in part 402 and will be dealt with in separate rulemaking. Statutory changes related to part 401 are included in this final rule, as discussed in part III of this preamble, to the extent possible in a final rule.

In deciding what statutory changes can and should be reflected in this final rule, HUD considered its general rulemaking procedures in 24 CFR part 10, the provisions of section 502 and section 503 of Pub. L. 106–74, and the provisions of section 522 of MAHRA. Section 503 makes the new changes to section 524 of MAHRA effective immediately upon enactment (October 20, 1999) and states that the authority to issue regulations (*e.g.,* in section 502) may not be construed to affect the effectiveness or applicability of provisions such as section 524. The newly-effective section 524(g) of MAHRA applies the amended section 524 to all contract expirations or terminations on October 1, 1999 or afterwards. Thus, HUD must promptly take appropriate action that recognizes that some of the matters covered in interim part 402 have changed.

Section 502, however, requires that any implementing regulations that the Secretary determines ''may or will affect tenants of federally assisted housing'' may be issued only after notice and comment rulemaking. Ordinarily, HUD has the discretion under 24 CFR part 10 to issue substantive changes to regulations for effect, without notice and comment rulemaking (*i.e.,* through an interim or final rule), if HUD determines that a public comment period before effectiveness is unnecessary, impracticable, or contrary to the public interest. Section 502 limits this discretion.

Finally, section 522 of MAHRA (enacted in 1997), which directed HUD to implement section 524 of MAHRA by interim and then final rule, was not expressly amended. HUD is already overdue in issuing the final rule required by that section. But HUD cannot now proceed to replace the interim rule with a final rule without recognizing the intervening changes to section 524 that are now in effect but are inconsistent with various provisions of the interim rule.

There is no clear guidance in the statutes on how to reconcile the later instructions on rulemaking procedure in section 502—which apply not only to

MAHRA changes, but to many unrelated programs such as the section 202 and section 811 assisted housing programs—with earlier instructions on rulemaking procedure that apply to specific provisions of MAHRA. In this final rule, HUD has reconciled those sections by applying the following five principles:

1. HUD should continue to honor Congressional intent for rapid final implementation of the Mark-to-Market Program, in accordance with section 522 of MAHRA, by publishing part 401 in final form as soon as feasible.

2. Provisions in the interim part 401 that conflict with later amendments to MAHRA should not be published in final form without making conforming changes, to avoid confusion and facial conflict with current statutory provisions.

3. Conforming changes that simply reproduce or paraphrase new statutory language do not ''affect'' tenants within the meaning of section 502, since any effect derives from the statute rather HUD's rulemaking. Thus, section 502 does not require a new proposed rule for such changes.

4. Conforming changes that simply reproduce or paraphrase new statutory language also do not have substantive effect on tenants, owners or others that would require prior notice and comment rulemaking under 24 CFR part 10. Such procedure is properly regarded as both unnecessary and contrary to the public interest.

5. Any changes to the interim rule that are made in response to new statutory language but that make substantive additions to the statutory provisions should be made only through a separate notice and comment rulemaking procedure commencing with a proposed rule—in accord with 24 CFR part 10 and (to the extent the substantive additions may affect tenants) section 502. Thus, no such changes should be included in this final rule.

D. Other Background Information

This final part 401 is based on HUD's consideration of: (1) Public comments received on the September 11, 1998, interim rule; (2) discussions at the public forums; (3) the initial development of working relationships with PAEs; and (4) certain provisions in Pub. L. 105–276 and Pub. L. 106–74 as mentioned above. HUD has also refined certain policies due to further consideration when preparing and revising the Mark-to-Market Program Operating Procedures Guide (called the ''Operating Procedures Guide'' in this preamble.)

The interim rule was signed by Secretary Andrew Cuomo in the absence of an OMHAR Director. OMHAR has now begun operations, and OMHAR Director Ira Peppercorn has statutory authority to sign this final rule because it is limited to part 401 and projects eligible for the Mark-to-Market program. As required by section 573(b) of MAHRA, this rule is issued with the approval of Secretary Cuomo.

II. Comments Received on Part 401

We received 61 comments that are included in the docket file for the interim rule. We disregarded five comments as not pertinent to the interim rule. The discussion in this section of this preamble summarizes the other comments and HUD's responses to them, except that a comment that pertained solely to part 402 of the interim rule, and HUD's response, will appear when part 402 is published as a separate final rule. In this section, we have grouped the sections of interim part 401 into major areas of related subject matter, as shown in the outline set forth below. Discussion is generally in the order in which the areas are first covered in interim part 401. We have not listed the sections that received no public comments.

A. §§ 401.2, 401.99 and 401.100, General provisions and eligibility.

1. Definitions (§ 401.2).
   a. Eligible project.
   b. Eligible project costs.
   c. Priority purchaser.
   d. Tenant organization.
2. Actions needed to request a renewal of project-based assistance (§ 401.99).
3. Projects eligible for a Restructuring Plan (§ 401.100).
   a. 236/202 projects.
   b. Preservation projects.

B. §§ 401.101 and 401.403, Rejection of project or owner.

1. Designation as ''bad'' project.
2. Designation as ''bad'' owner.
3. Treatment of civil rights violations.
4. Project transfers to ''good'' owners.

C. §§ 401.200, 401.200 and 401.304, PAE selection and compensation.

1. Civil rights violations.
2. PAE compensation.
   a. Incentives.
   b. Timing of HUD payments.
   c. Same fee schedule for public and private PAEs.
   d. Environmental review responsibilities.

D. §§ 401.303, 401.309, 401.310, and 401.314, Other provisions of PRA.

1. Indemnification of non-public PAEs (§ 401.303).
2. PRA term and termination provisions (§ 401.309).
   a. Term should be longer than 1 year.
   b. PRA terminations.
3. Conflicts of interest (§ 401.310).
   a. General.
   b. Contested matters.
4. Environmental review responsibilities (§ 401.314).

E. § 401.402, Cooperation with owner and qualified mortgagee in Restructuring Plan development.

F. §§ 401.405–.406, Restructuring Commitment.

G. § 401.408, Affordability and use restrictions required.

1. Use restrictions and partially-assisted projects.
2. Use Agreements should last ''exactly'' 30 years—not ''at least'' 30 years.
3. If no section 8 funds are available, owners should be required to charge restructured rents or below-market LIHTC rents.
4. There should be no below-market rents.
5. Enforceability of Use Agreements and notice.
6. Pre-existing Use Agreements should be preserved.
7. Use Agreement should be subordinate to conventional loan.
8. Renewal contract terms must remain materially the same.

H. §§ 401.410–.412, Determining and adjusting rents under restructuring with project-based assistance.

1. Difficulties in determining comparable market rents.
2. ''Blended'' rents considering unassisted but restricted units.
3. Objections to ''NOI project'' and ''positive social asset'' requirements for exception rents.
4. Exception rents should be alternative to FMR.
5. Limitation of exception rents to 120 percent of FMR.
6. Need to define ''community''.
7. Other factors to be included in expenses.
8. Determination of OCAF.
   a. General.
   b. Excluding debt service.
9. Negative OCAF.
10. Appeals of OCAF.

I. §§ 401.420–.421, Project-based assistance or tenant-based assistance.

1. What vacancies should be considered in determining the presence of a tight market?
2. Effect of sale to cooperative.
3. Limit conversion approvals to public body PAEs.
4. Requirement for semi-annual reporting in § 401.421(d).
5. How should the final rule handle/present factors to be considered in the Rental Assistance Assessment Plan?
6. Must all units be assisted under a Restructuring Plan?

J. § 401.450–.453, Physical condition of project.

1. Use of FNMA PNA Guidelines should not be eliminated.
2. The final rule should make clear that third party expenses for physical condition evaluation are eligible expenses.
3. Lead hazards.

4. Reserve account deposit.
5. Concern about cost-effectiveness determination in § 401.451(c).
6. PAE certification.
7. Property standards for rehabilitation.
8. HQS should not apply to non-assisted market rent units.

K. §§ 401.460–.471, Mortgage restructuring and payment of claims.

1. How should net operating income available to pay the first mortgage be determined?
   a. Expenses.
   b. Sizing the first mortgage.
2. First mortgage terms and conditions.
3. Refinancing.
4. Second mortgage terms and conditions.
   a. Interest rate.
   b. Other terms and conditions.
5. Forgiveness/modification of second mortgage.
6. Return to owner.
7. Third mortgage.
8. Claims.

L. §§ 401.472–.473, Funding of rehabilitation.

1. Opposition to 20 percent owner contribution requirement.
2. Opposition to limit on funding from governmental resources.
3. Other comments regarding 20 percent requirement.
4. Comments regarding use of project accounts for rehabilitation.
5. Section 236(s) rehabilitation grants.
6. Funding of rehabilitation through claim amount.

M. § 401.480, Sale or transfer of project.

1. HUD should be responsible for sale of projects.
2. Preference for priority purchasers.
3. Priority purchasers and competitive sales.

N. §§ 401.481-.484, Other requirements of Restructuring Plan.

1. Subsidy layering limitations on HUD funds (§ 401.481).
2. Leasing units to voucher holders (§ 401.483).
3. Property management standards (§ 401.484).
   a. General comments on changes needed.
   b. Suggestions for language changes.
4. Management fees.

O. §§ 401.500–.501, Participation by tenants, community and local government.

1. General.
2. Involve others in Rental Assistance Assessment Plan.
3. Intermediaries administering technical assistance grants should receive notice.
4. Notices in other languages.
5. Notice to all tenants and posted in project.
6. Right to organize.
7. Tenant role in PAE selection.
8. Rent levels.
9. Use Agreement changes.
10. Monitoring and compliance activities.
11. Transfer of properties and tenant participation.
12. Tenant involvement for projects not restructured.
13. Access to information.

P. §§ 401.550–.554, Implementation of the Restructuring Plan after closing.

1. Inspections.
2. PAE matters.
3. Role of lender.
4. Servicing of second mortgage.
5. Section 8 contract administration.
6. Enforcement.

Q. § 401.595, Contract provisions.

R. § 401.601 of interim rule and § 402.4(a)(2) of final rule, Consideration of an owner's request to renew an expiring contract without a Restructuring Plan.

1. Determination/verification of rent comparability.
2. Determining adequacy of DSC at market comparable rents.

S. § 401.602, Tenant protection if an expiring contract is not renewed.

1. Is tenant-based assistance mandatory?
2. Notice issues.
   a. 6-month notice of non-renewal.
   b. When is notice required?
3. Rent levels for tenant-based assistance.
4. Timing of tenant-based assistance.

T. § 401.606, Tenant-based assistance provisions for displaced tenants.

U. §§ 401.645 and 401.651, Owner dispute of rejection and administrative appeals.

1. Tenant appeals.
2. PAE appeals of rejections under § 401.405.
3. Time for owner to dispute approved plan.
4. Owner appeals.

V. § 401.600, Will a contract be extended if it would expire while an owner's request for a Restructuring Plan is pending?

W. Miscellaneous comments.

A. Sections 401.2, 401.99 and 401.100, General Provisions and Eligibility

Summary of Sections

Section 401.2 identifies the terms that are defined in MAHRA and used in the rule, and defines additional terms that are used in the rule. Section 401.99 explains three procedures to be followed by owners who request renewals of section 8 project-based assistance contracts. First, an owner of an eligible project who requests a Restructuring Plan must, at least 3 months before the project-based assistance contract expires, certify to HUD that, to the best of the owner's knowledge, project rents exceed comparable market rents and neither the owner nor any affiliate is suspended or debarred (or that the owner proposes a voluntary sale of the project). Second, an owner of an eligible project who does not request a Restructuring Plan must submit to HUD the certification described above in the same time frame, with the additional items that will permit the PAE to consider the request in accordance with § 401.601 of the interim rule (§ 402.4(a)(2) in this final rule) to determine whether the contract should be renewed under § 402.4. Finally, because part 401 is limited to projects eligible for a Restructuring Plan, this section of the interim rule refers the owner to § 402.5 if the project is not eligible for restructuring but the owner wants project-based assistance renewed.

Section 401.100 of the interim rule (merged with the definition of ''eligible project'' in the final rule) incorporates the statutory requirements in section 512(2) of MAHRA for an eligible project by providing that project rent exceeds the rent of comparable properties, as required by section 512(2)(A), if the gross potential rent revenue (*i.e.,* at 100 percent occupancy) for the project-based assisted units in the project at current gross rents exceeds the gross potential rent for those units (at 100 percent occupancy) using comparable market rents.

Summary of Comments

1. Definitions (§ 401.2).

a. Eligible project. Two commenters felt that the definition of ''eligible project'' in the interim rule would require restructuring for projects whose aggregate rents might not exceed comparable market rents, contrary to Congressional intent, because rent levels for non-assisted units would not be considered in preservation projects or similar projects with unassisted below-market units and above-market section 8 units.

HUD response: Preservation projects are discussed in the response under Section II.A.3.b. They are no longer eligible for the Mark-to-Market Program.

b. Eligible project costs. One commenter felt that eligible project costs should include the costs to owners of hiring advisors such as accountants, appraisers, attorneys, real estate specialists, or tax advisors. The commenter argued that many owners are confused and uninformed about the details and impact of MAHRA and that they have limited funds to seek advice.

HUD response: Such transaction costs can be included in the mortgage restructuring to the extent reasonable and necessary and supportable within a refinancing first mortgage (though not in a modification of the existing first mortgage). If the refinancing mortgage is insured by FHA, normal FHA criteria would be applied. Generally, OMHAR will recognize 50 percent of such costs to the extent they are customary, reasonably necessary, and to the extent they are otherwise acceptable under the terms of the new restructured first mortgage. The owner's share of such costs could only be recognized as

project operating expenses to the extent there was sufficient cash flow in the fiscal year during which the restructuring took place and then only with written approval from the HUD Multifamily Hub or Program Center.

c. Priority purchaser. Three commenters were concerned about the definition of ''priority purchaser''. One felt that the definition should include non-tenant based nonprofit organizations and non-community based nonprofit organizations because many of these groups possessed considerable experience with low-income housing and would be important resources in preserving low-income housing. Two commenters suggested that the final rule clarify that a tenant organization or tenant-endorsed community-based nonprofit or public agency can, as a controlling general partner in a limited partnership formed to raise tax credit equity, retain its priority purchaser status through the partnership, as well as the related ability to qualify for second mortgage forgiveness.

HUD response: HUD agrees that a limited partnership with a sole general partner that is a tenant organization or tenant-endorsed community-based non-profit organization or public body may be viewed as a priority purchaser for purposes of § 401.461(b)(5) (possible forgiveness or modification of HUD-held second mortgage upon sale of project to priority purchaser) and § 401.480 (preference for sale to priority purchaser when current owner found ineligible for restructuring). HUD does not agree with the suggestion that priority purchasers should include national non-profit organizations without a local community base. There are national groups that can bring experience, but they should either partner with a local group, or else need to compete with other potential purchasers after the period reserved for marketing exclusively to priority purchasers, which will initially be set at 4 months. The applicable statutory provisions (sections 516(e) and 517(a)(5) of MAHRA) clearly show a Congressional desire for community-basing in this context.

d. Tenant organization. One commenter suggested that the definition of ''tenant organization'' in the final rule should clarify the details of the election of tenant organization officers to avoid future disputes as to whether an organization is a tenant organization entitled to recognition.

HUD response: This level of detail is inappropriate and unnecessary for a rule. HUD will address organizational details as needed in the Operating Procedures Guide or subsequent guidance.

2. Actions needed to request a renewal of project-based assistance (§ 401.99).

One commenter pointed out that ordinarily a project has 60 days to complete the annual financial statement and that requiring the statement during this period may cause difficulties for owners. The commenter suggested that, in such instances, the preceding year's financial statement should be acceptable. The same commenter suggested that the reference in § 401.99(c) to § 402.5 should be expanded to include § 402.4 because a project can have its contract extended under § 402.4 if the owner desires. One commenter said that notice of intent to restructure should be given to mortgagees.

HUD response: The most recently required financial statement must be provided. If the renewal request and expiration is within the 60 day period following the end of the project's fiscal year, the previous year's statement will be accepted. We have added the suggested reference to § 402.5. A project owner must give notice to mortgagees of intent to restructure. This is stated in the interim rule's preamble discussion of § 401.99, and is clearly required in the Operating Procedures Guide. We consider such notice part of the owner cooperation required by § 401.402.

3. Projects eligible for a Restructuring Plan (§ 401.100).

a. 236/202 projects. One commenter requested clarification of whether the class of ''236/202'' projects are eligible under MAHRA. (These projects were originally processed under the section 202 program but converted to the section 236 program after its creation in 1968.)

HUD response: Section 236/202 projects are eligible in the same manner as other section 236 projects.

b. Preservation projects. One commenter argued that MAHRA should be interpreted to exclude from eligibility preservation projects with plans of action (under ELIHPA or LIHPRHA). The commenter pointed out difficulties in reconciling MAHRA's requirements for restructuring with promises made to owners in ELIHPA/LIHPRHA plans of action, such as the short term use agreements and the unrestricted return to owner approved by HUD under ELIHPA. (Other comments related to preservation projects are mentioned in the summaries in Sections II.A.1.a., II.H.2., II.H.7., and II.K.1 of this preamble, and the response below applies to those comments as well).

HUD response: Section 531(b) of Pub. L. 106–74 amended MAHRA to make preservation projects with plans of action ineligible for the Mark-to-Market program. This statutory change automatically excludes these projects from the ''eligible projects'' definition in the interim rule. No change in rule language is needed to make the final rule comply with the statutory change.

B. Sections 401.101 and 401.403, Rejection of Owner or Project

Summary of Sections

These sections implement section 516(a) of MAHRA, which permits HUD to elect to not consider a restructuring plan or a request for contract renewal on the basis of certain actions or omissions by an owner or purchaser of the project or an affiliate, or if the PAE determines that the poor condition of the project cannot be remedied in a cost-effective manner. Under § 401.101, HUD and PAEs will not consider the request of an owner of an eligible project for a Restructuring Plan if the owner or an affiliate is debarred or suspended by HUD unless a sale or transfer of the property is proposed in accordance with § 401.480. The final rule makes a change to § 401.101 regarding affiliates, consistent with the § 401.403 change discussed below.

Under § 401.403 of the interim rule, the PAE is responsible for a further more complete and ongoing assessment of owner and project eligibility while a Restructuring Plan is developed. The PAE must inform OMHAR if: (1) The owner or an affiliate is debarred or suspended; (2) the owner or an affiliate has engaged in material adverse financial or managerial actions or omissions as described in section 516(a) of MAHRA, which may include actions that have resulted in imposition of a Limited Denial of Participation (LDP) or a proposed debarment under 24 CFR part 25, or outstanding violations of civil rights laws; or (3) the PAE determines that the project does not meet the physical condition standards in § 401.453 and cannot be rehabilitated to meet such standards in a cost-effective manner. Under the interim rule, HUD may reject an owner's request for a Restructuring Plan for any of these reasons. In the final rule, debarment or suspension of an owner are automatic grounds for rejection under § 401.403 unless an acceptable sale is proposed. We revised the rule to give HUD discretion whether to accept or reject an owner request for restructuring if an affiliate of the owner is suspended or debarred. When rejection is discretionary, HUD may advise the PAE

to continue processing (under part 401) or decide to continue processing itself (under part 402).

Summary of Comments

1. Designation as ''bad'' project. One commenter suggested that the rejection of a ''bad project'' because of poor condition that cannot be remedied in cost-effective manner needs to be guided by an objective standard of cost-effectiveness (the commenter suggested a standard).

HUD response: HUD does not agree with this commenter that an objective elaboration on the cost-effectiveness requirement is feasible for inclusion in the final rule. The specific facts and circumstances must be considered by the PAE and OMHAR. The appeal process provided in subpart F is available if there is a dispute.

2. Designation as ''bad'' owner. HUD should not reject an owner for a suspension/debarment if the owner's appeal is not yet adjudicated, argued two commenters. One of these commenters also objected to basing a ''bad owner'' rejection on a limited denial of participation (LDP) or proposed debarment alone because such actions might not be ''material'' within the meaning of section 516(a) of MAHRA). The commenter suggested that a PAE should examine the facts behind a LDP/proposed debarment and reach its own conclusion regarding materiality.

HUD response: The rule is consistent with these comments. ''Bad owner'' determinations are made on the basis of ''material adverse financial or managerial actions or omissions'' identified in section 516(a)(2) of MAHRA. In the final rule, the Department has decided that an actual suspension or debarment will always be material for purposes of eligibility for a Restructuring Plan. HUD and PAEs are required to make a determination of materiality before rejecting an owner if a debarment or suspension decision has not already been made by HUD.

3. Treatment of civil rights violations. Two commenters wanted civil rights violations to be considered in a ''bad owner'' determination only if they have been finally adjudicated and have not been substantially cured. One of these commenters commented on a need to clarify which violations are disqualifying civil rights violations.

HUD response: Civil rights violations will be addressed by OMHAR after consultation with HUD's Office of Fair Housing and Equal Opportunity. The Operating Procedures Guide details the decision-making process regarding owner eligibility for a Restructuring Plan, including the point at which an apparent outstanding civil rights violation will constitute a bar to further consideration of a Restructuring Plan for the owner. The Operating Procedures Guide provides further information on the civil rights legal authorities that will be considered when making a determination of owner eligibility.

4. Project transfers to ''good'' owners. Four commenters thought that the rule was deficient in its treatment of project transfers after ''bad owner'' determinations. One labelled the interim rule's provisions providing for rejection of certain owners a ''misguided policy of forced voucherization'' and wanted the final rule to reiterate that contract termination is a last resort and that transfer to a priority purchaser is preferable to conversion. Two others cited a statement by Senator Bond regarding the need for alternative solutions for projects when an owner is disqualified.

HUD response: The commenters who thought that the rule was deficient did not suggest specific improvements to the rule. The determination to deny a restructuring or to not renew the project-based assistance will be made on a case-by-case basis. The PAE and HUD will consider the impact on tenants, the potential to transfer the project to priority purchasers, and other remedies. The PAE will invite tenant and local community participation and solicit comments in accordance with §§ 401.500 and .501 of the final rule.

C. Sections 401.200, 401.201 and 401.304, PAE Selection and Compensation

Summary of Sections

Section 512(10) of MAHRA, referenced in § 401.200, permits a public agency, a nonprofit organization, or a for-profit entity, to be a PAE. Under § 401.200, the PAE may not have any outstanding violations of civil rights laws, determined in accordance with criteria in use by HUD. Section 401.201 explains that HUD will select PAEs in accordance with the statutory selection criteria and additional selection criteria established by HUD. The selection method will be determined by HUD and may be through a request for qualifications (RFQ). Section 401.304 provides that the PRA will contain provisions on compensation to the PAE regarding a base fee and reimbursement of expenses, and may provide for incentive fees.

Summary of Comments

1. Civil Rights violations. One commenter had due process concerns with requiring that a potential PAE have no outstanding violations of civil rights laws. This commenter recommended that potential PAEs should not be disqualified unless the civil rights violations are material and the result of a final adjudication. In addition, this commenter felt that violations that have been substantially cured should not become grounds for disqualification.

HUD response: Please see HUD's response under Section II.B.3. on a similar point.

2. PAE compensation.

a. Incentives. One commenter felt that it was important to have full and early public disclosure of incentives to PAEs in order to ensure public confidence in the fairness and objectivity of the restructuring process. Three commenters felt that PAE incentives should reflect the statutory intent that economic and non-economic objectives be balanced. One of these commenters suggested incentives similar to those offered PAEs in the Portfolio Reengineering demonstration programs.

HUD response: The specific details of PAE compensation will be included in the PRA. They are not appropriate for inclusion in regulations since compensation will be subject to revision from time to time. The details of the PAE compensation package will be fully disclosed when the ongoing negotiations with the remaining PAEs without PRAs are concluded. The compensation for private PAEs is determined through a competitive bidding process. The incentive section of the compensation package has been set up to balance the preservation and cost savings goals of the Mark-to-Market Program. The compensation package of the demonstration program is being carefully considered as OMHAR finalizes the PAE compensation package for the permanent program.

b. Timing of HUD payments. One commenter urged HUD to provide PAEs with a significant portion of their fees early in the restructuring process.

HUD response: We do not agree that this would be necessary or appropriate. Funds for fees and reimbursable expenses will be released commensurate with completion of work.

c. Same fee schedule for public and private PAEs. One commenter was concerned about differing fee schedules for public and private PAEs. This commenter felt that a differing fee schedule might lead HUD to choose private PAEs in order to save money, thus contradicting the Congressional mandate to utilize public agencies whenever possible to protect the public interest.

HUD response: The statute, the regulations, and HUD's implementation of the program have all been consistent with expressed Congressional intent that public entities have a priority in OMHAR's selection process for a PAE within a geographic jurisdiction.

d. Environmental review expenses. Two commenters noted that the interim rule indicated that the PAE may be expected to assist HUD in complying with HUD's environmental review responsibilities by completing certain forms or checklists. Both commenters suggested that HUD should clarify that any outside expense incurred by PAEs in completing these forms should be considered a reimbursable expense.

HUD response: Such expenses will be reimbursable subject to the terms of the PRA.

D. Sections 401.303, 401.309, 401.310 and 401.314, Other Provisions of PRA

Summary of Sections

Section 401.303 implements section 513(a)(2)(G) of MAHRA, which requires HUD to provide a PAE indemnity against lawsuits and penalties for action taken by a PAE pursuant to the PRA (except for willful misconduct or negligence) if the PAE is a State housing finance agency or a local housing agency. Under § 401.309, the PRA will have a term of 1 year, to be renewed for successive terms of 1 year with the mutual agreement of both parties. A PRA will be subject to termination by HUD at any time.

Section 401.310 addresses conflicts of interest for a PAE and related persons defined in the section as ''restricted persons''. A conflict of interest exists when a PAE or restricted person either: (1) Has personal, business, or financial interests or relationships that would lead a reasonable and knowledgeable person to question the integrity or impartiality of those acting for the PAE; or (2) in a lawsuit, is an adverse party either to HUD or to the owner of a project under the PAE's PRA. In general, HUD will avoid dealing with a PAE with a conflict of interest.

Section 401.314 states that HUD is legally required to retain any environmental review responsibilities under 24 CFR part 50, and that any required environmental review will occur before HUD executes a Restructuring Commitment (see § 401.405). Without delegating any decision-making authority to the PAE, OMHAR has included in the PRA a provision for PAE completion of forms and/or checklists to assist HUD in complying with its requirements under environmental regulations.

Summary of Comments

1. Indemnification of non-public PAEs (§ 401.303).

One commenter felt that HUD should indemnify non-public PAEs. The commenter argued that while section 513(a)(2)(G) of MAHRA specifically requires HUD to indemnify public PAEs, section 517(b)(5) gives HUD broad authority to provide indemnification to non-public PAEs as well. This commenter asserted that the same policy reasons that justify indemnification of public PAEs argued in favor of indemnifying non-public PAEs. Finally, the commenter thought that HUD should make clear in the final regulation that a PAE may indemnify a non-public team partner, if it so chooses.

HUD response: HUD will indemnify only public entity PAEs. Although PAEs may choose to indemnify teaming partners, such indemnification will not be a reimbursable expense and PAEs may not pass on this cost to OMHAR or HUD. There is no prohibition in MAHRA against PAEs indemnifying teaming partners or subcontractors and, accordingly, this will not be addressed in the final rule.

2. PRA term and termination provisions (§ 401.309).

a. Terms should be longer than 1 year. One commenter pointed out that preparing an application to become a PAE takes considerable time and effort, and that learning and becoming expert at fulfilling the requirements of the PRA requires significant additional effort. The commenter felt that 1 year would not provide an adequate opportunity for HUD to determine the PAE's capacity. Another commenter felt that the short term would interfere with owner ability to develop long-term relationships with a PAE. The commenter suggested that the terms should be indefinite after the first year. A third commenter had two concerns about the PAE renewal process: that yearly PRA renewals would lead to another burdensome and unnecessary PAE selection process, and that HUD might use the annual review process to replace HFAs with non-public entities because the one-time priority for public entities would not apply after the initial selection. The commenter argued that Congress did not intend for HUD to use public agencies as PAEs only for the first year, and discouraged HUD from trying to circumvent Congress' intent by creating a new PAE selection process in the later years of the program.

HUD response: If 1 year is not adequate to determine a PAE's capacity, HUD will extend the contract for an additional year. Except in the presumably unusual cases where a PRA was terminated and the assets reassigned to another PAE or to OMHAR itself, the PAE will continue to process the particular projects agreed upon by HUD and the PAE. A 1-year contract term is appropriate both in order to revise provisions as necessary based on experience, and as an administrative convenience for the Department. OMHAR's intent is to renew PRAs with PAEs unless there are performance or capacity problems or there is mutual agreement not to continue.

b. PRA terminations. One commenter felt that the rule appeared to allow termination with or without cause, and that terminations without cause would cause PAEs to adopt a short-term perspective detrimental to restructuring. This commenter suggested only allowing termination for cause and providing appropriate due process protection. Another commenter agreed that termination should only be for cause and ''only in extraordinary circumstances''. One commenter was concerned that HUD could terminate a PRA at any time for cause but that a PAE could not, and that rights to termination for cause should be mutual because Congress intended HUD and PAEs to be partners.

HUD response: The PRA includes a bilateral right to termination for convenience and is therefore in keeping with the partnership goal. Were OMHAR to exercise this right the PAE would be paid, at a minimum, for services rendered to the point of the termination. We do not believe that the termination for convenience provision of the rule will reasonably affect the PAE's perspective on the PRA or restructuring work.

3. Conflicts of interest (§ 401.310).

a. General. A number of commenters expressed concerns about the conflict of interest rules. One commenter felt that HUD should be able to waive a conflict involving a potential PAE who is taking an adverse position to an owner, if the owner consents, because it is the owner who is at risk of being damaged. One commenter felt that the conflicts of interest rule was overbroad. This commenter argued that HFAs often work with the same principals in different roles and that an HFA should not be penalized for having legitimate business contacts that do not interfere with their objectivity as a PAE. This commenter suggested that HUD narrow the scope of the conflict of interest provisions so that they apply only to specific properties undergoing restructuring. This commenter also felt that the conflict of interest provisions

would make it difficult for a PAE to provide an owner with other available resources, such as Low Income Housing Tax Credits, HOME funds, and risk-sharing loans, which is unnecessary because HFAs utilize strict, objective allocation plans for these resources.

HUD response: The conflict of interest provisions are drafted to protect OMHAR and the public interest while allowing flexibility to accommodate varying factual situations. In order to prevent unfairness in particular cases and to allow PAEs to provide owners with other available resources, all waiver requests will be considered carefully. As deemed appropriate on a case-by-case basis, OMHAR will seek information from outside sources when considering conflict of interest determinations and waiver requests.

b. Contested matters. Two commenters felt that any lawsuit in which a PAE and an owner were adversaries should automatically be considered a conflict of interest and the PAE should automatically be disqualified from exercising any responsibilities under the regulations with regard to that owner. One of these commenters also felt that the final rule should allow owners and other interested parties to seek HUD review of potential conflicts of interest, in addition to the PAE. One commenter asked whether and why a disqualifying conflict of interest would apply, not only to a party to a lawsuit or contested matter, but also to any legal counsel representing such a party. This commenter also felt that the final rule should more fully define the scope of the terms ''administrative proceeding or other contested matter'' and ''adverse to HUD.''

HUD response: Any lawsuit in which a PAE and an owner are adversaries will be considered a conflict of interest. It will trigger scrutiny and will necessitate a waiver prior to the PAE beginning or continuing work on a Restructuring Plan. OMHAR will carefully investigate conflict of interest allegations or disclosures that are raised by any source. The Operating Procedures Guide and OMHAR's Internet Website provide more information on the specifics of OMHAR's conflict of interest requirements, including affected parties and definitions of terms.

4. Environmental review responsibilities (§ 401.314).

One commenter felt that, if the restructured first mortgage is refinanced with a conventional loan, then HUD should delegate all required environmental reviews to the conventional lender.

HUD response: Current law does not permit HUD to delegate environmental review responsibilities to a lender.

E. Section 401.402, Cooperation with Owner and Qualified Mortgagee in Restructuring Plan Development

Summary of Section

This section provides guidance for implementation of the requirement in section 514(a)(2) of MAHRA for cooperation among the PAE, project owner and mortgage servicer. The owner must actively work with the PAE and other necessary third parties, including the mortgage servicer, to develop a Restructuring Plan. If the owner fails to cooperate to the satisfaction of the PAE, and HUD agrees, the PAE will not continue with development of a Restructuring Plan.

Summary of Comments

One commenter asked HUD to clarify that an owner who is viewed as insufficiently ''cooperative'' in helping a PAE develop a restructuring plan that differs from the approach suggested by the owner will not become ineligible under § 402.7 for section 8 contract renewal without restructuring. Another commenter said that HUD should make it easier for servicers to ''cooperate'' with respect to first mortgages that are too small (before or after a partial claim) to attract servicers. This commenter mentioned such matters as difficulty in getting the consent of securitizers (including Ginnie Mae) or whole-loan investors, a need for an increased FHA servicing fee, reducing the costs of servicing (specifically, not requiring a mortgagee inspection if the PAE inspects), allowing financing costs to include reasonable administrative fees, considering an additional escrow account for servicing fees, and considering rebate of part of FHA premium such as the section 221(g)(4) put for Interest Enhancement Payment.

HUD Response: We will address the comment on eligibiity under § 402.7 when part 402 is published in final form. Inability of a mortgagee or servicer to obtain investor consent to modify, or their determination that the size of the restructured loan was not financially feasible to originate and/or service, is not considered a lack of cooperation for purposes of § 401.402. As noted in section III of this preamble under § 401.550, the final rule clarifies that HUD will accept an inspection by a PAE in lieu of an inspection by the mortgagee or servicer.

F. Sections 401.405–.406, Restructuring Commitment

Summary of Sections

These sections provide for HUD to approve a Restructuring Plan as submitted by a PAE, require changes as a condition for approval, or reject the Plan. HUD will inform the PAE of the reasons for rejection and the subpart F dispute and appeal procedure will apply. The PAE will deliver to the owner, for execution, a proposed Restructuring Commitment as the final element of a HUD-approved Restructuring Plan.

Summary of Comments

Two commenters said that HUD should be required to approve/disapprove a proposed Restructuring Commitment within a specified period after PAE submission; one of them suggested 10 days.

HUD response: OMHAR anticipates a standard processing time of 15 days for review of conforming transactions. Conforming transactions are those in which there is limited financial impact or risk to the Federal Government. Specific criteria will be defined in the Operating Procedures Guide and the PRA. The standard processing time for review of non-conforming transactions is anticipated to be 30 days.

G. Section 401.408, Affordability and Use Restrictions Required

Summary of Section

Section 401.408 of the interim rule implements section 514(e)(6) of MAHRA, which requires the Restructuring Plan to provide for affordability and use restrictions on the project for a term of at least 30 years, consistent with the long-term physical and financial viability and character of the project as affordable housing. During a period when at least 20 percent of the units in a project receive project-based assistance, this section provides that the affordability restrictions applicable to such assistance will apply in lieu of other restrictions required to be in the recorded Use Agreement. Otherwise, the Use Agreement will require conformance to the rent and tenant income profile used in the Low Income Housing Tax Credit Program (LIHTC) for any project that is restructured (*i.e.,* either rents set for 20 percent of the units at 30 percent of 50 percent of median income or for 40 percent of the units at 30 percent of 60 percent of median income.) The Use Agreement will specify which interested parties, in addition to HUD and the PAE, will have rights of enforcement.

Summary of Comments

1. Use restrictions and partially-assisted projects.

Two commenters expressed concern that § 401.408 makes use restrictions applicable to an entire project even when that project is only partially-assisted. Both commenters suggested that use restriction agreements should apply only to formerly-assisted units within a partially-assisted project. One commenter thought that a failure to make this exception would cause owners of partially-assisted projects to opt out of the section 8 program, which in turn would decrease the stock of affordable housing.

HUD response: HUD does not share the concerns of these commenters. Use restrictions run with the land because the entire project benefits from a debt restructuring. To the extent owners can opt out from further project-based assistance, they do not need the restructuring (and would not be subject to the Use Agreement).

2. Use Agreements should last ''exactly'' 30 years—not ''at least'' 30 years.

Four commenters were concerned about the requirement that the Use Agreement be in effect for ''at least'' 30 years. These commenters recommended that the final rule require the Use Agreement to be in effect for ''exactly'' 30 years because the interim rule language might allow PAEs to specify terms greater than 30 years indiscriminately. One commenter thought all Use Agreements should last for 30 years except where unusual conditions specified in the Operating Procedures Guide are present and the PAE decides that a longer term is consistent with statutory intent. Another commenter felt that a PAE's discretion to use terms longer than 30 years should be tightly overseen by HUD.

HUD response: MAHRA requires a Use Agreement term of at least 30 years. The decision to require a longer term should be left to the PAE as the party most familiar with particular circumstances that may make longer restriction periods appropriate.

3. If no section 8 funds are available, owners should be required to charge restructured rents or below-market LIHTC rents.

Two commenters felt that owners should be required to charge the lesser of restructured rents or Low Income Housing Tax Credit (LIHTC) rents (which may be below-market) in the event that section 8 funds are not available in the future.

HUD response: The owners of properties subject to Use Agreements will be limited to rents at the lesser of market or below-market LIHTC rents in the event that section 8 funds are not available in the future. Since market conditions will more likely improve or worsen rather than stay static, the market rents the units will command at that time will probably not be the restructured rents.

4. There should be no below-market level rents.

One commenter felt that the rule contemplated establishing below-market rents when fewer than 20 percent of the units in a project receive project-based assistance. This commenter was concerned about adverse tax consequences and strongly recommended that no project be required to reduce its rents below market level. Another commenter felt the final rule should indicate that owners will not be required to accept project-based or tenant-based assistance if the final rule does not allow for payment to the owner of market rents. This commenter also argued that, because LIHTC restrictions are not imposed by MAHRA, imposing such restrictions could cause owners to evict tenants with higher incomes or hold units vacant for unreasonable time periods. The commenter suggested less restrictive affordability requirements. If LIHTC requirements are maintained, this commenter felt that owners should have the choice of affordability mix options.

HUD response: When fewer than 20 percent of the units in a project receive project-based assistance, the Use Agreement will have the practical effect of requiring the lesser of market rents (as a result of the operation of the local rental market) or the LIHTC rents (as specified in the Use Agreement). Further, the owner has the option of selecting the tax credit standard (20 percent of the units with rents affordable at 50 percent of median income, or 40 percent of the units with rents affordable at 60 percent of median income) which yields the highest net operating income. For the inventory of projects with above-market section 8 rents, the LIHTC rents are often greater than market rents. In cases where the LIHTC rents are less than market rents, the impact on the supportable secured debt (and thus the tax consequences of the restructuring) will typically be nominal. A less restrictive affordability requirement is not appropriate.

5. Enforceability of Use Agreements and notice.

Two commenters felt that tenants and tenant organizers should always be given the right to enforce Use Agreements, which the interim rule did not seem to demand. Another commenter felt that third parties should not be allowed to challenge matters that both the PAE and the owner agree upon, or without prior written permission from the PAE. This commenter also felt that the rule should make clear that the owner should receive notice of any enforcement actions as well as a reasonable opportunity to cure any problems. One commenter felt that the right of parties to enforce a Use Agreement should be tightly controlled. One commenter felt that HUD should identify the specific remedies provided each party that may enforce a Use Agreement. This commenter also felt that HUD should, at a minimum, indicate that all enforcement actions must be initiated by HUD/PAE and that HUD/PAE will have sole responsibility for determining what steps an owner must take to cure any violations.

HUD response: Section 401.408(i) of the final rule makes it clear that Use Agreements will include the parties listed in that paragraph as third party beneficiaries. Further, a Use Agreement must require the party bringing enforcement action to give the owner notice and a reasonable opportunity to cure any violations. The PAE or HUD will typically be the entity bringing enforcement action, but this provision has been specifically crafted to allow other parties to bring action. This will ensure that other interested parties such as tenants are able to protect their interests in cases where a project is not covered by a PRA, or where HUD or the PAE is unable or unwilling to take action. In the rare case where HUD perceives clear abuse by a third party that is not exercising enforcement rights in good faith, HUD may exercise its right to modify a Use Agreement to require the third party to obtain prior HUD approval for any enforcement action concerning the Use Agreement.

6. Pre-existing Use Agreements should be preserved.

Two commenters suggested that a Mark-to-Market Use Agreement should be subject to any pre-existing Use Agreements, which should be preserved. One of these commenters felt that the final rule should make clear that the restructuring process should not be used to lessen any previous affordability restrictions.

HUD response: Restructuring under the Mark-to-Market Program will not automatically relieve a project of any existing Use Agreements and affordability restrictions. If an owner considers that existing agreements and affordability restrictions are based on section 8 terms and policies no longer authorized by Congress, or will interfere

with achieving the objectives of a proposed Restructuring Plan, the owner should bring this concern to the PAE's attention so that the PAE can consider proposing appropriate changes for HUD's approval.

7. Use Agreement should be subordinate to conventional loan.

One commenter felt that if the restructured first loan is refinanced with a conventional loan, then the Use Agreement should be subordinate to this loan (*i.e.* the Use Agreement should not survive foreclosure). This commenter argued that most conventional lenders will refuse to refinance mortgages subject to Use Agreements if the agreements survive foreclosure.

HUD response: Section 514(e)(6) of MAHRA requires a Use Agreement to apply for at least 30 years and any subordination that could lead to termination of the Use Agreement upon foreclosure of a conventional loan would conflict with this MAHRA requirement.

8. Renewal contract terms must remain materially the same.

Five commenters said that renewals of project-based contracts should be required to contain terms that are materially similar to the initial post-restructuring contract. Two commenters argued that unless this is done, general partners will have difficulty recommending the restructuring transaction to limited partner investors. One commenter suggested that the final rule make it ''crystal clear that HUD cannot decrease the benefits to the owner upon subsequent renewal offers.'' Another commenter felt that Use Agreements should contain conditions for automatic expiration of the agreement should there be changes to the agreement that are detrimental to the original terms and conditions of the restructuring plan. One commenter felt that an owner's obligation to renew section 8 assistance should terminate if HUD/PAE fails to renew for any year. The same commenter felt that under the final rule there should be no circumstances, other than unavailability of funds or HQS violations by the owner, under which HUD/PAE may refuse to renew project-based section 8 assistance. Another commenter felt that HUD should guarantee that section 8 funds would be available in the future as long as necessary to assure affordability. This commenter felt that imposing use restrictions would be meaningless without a guarantee of section 8 funds for the project.

HUD response: Under section 515(a) of MAHRA, either the Secretary or a PAE acting under a contract with the Secretary is required to offer to renew or extend an expiring contract, subject to the availability of amounts provided in advance in appropriations Acts. In addition, Pub. L. 106–74 amended section 524 of MAHRA (which applies to contract renewals after a Restructuring Plan is in place) to make renewals mandatory upon owner request, also subject to appropriations. MAHRA does not expressly require that the offer be in accord with the contract renewal terms provided in the approved Restructuring Plan and implies that the level of appropriations may not always permit such an offer to be made. There is no guarantee of, and the Department does not have the authority to obligate, section 8 funds unless Congress appropriates the funds. Section 515(a) protects the owner by only requiring the owner to accept the renewal offer if the offer in ''in accordance with the terms and conditions specified in'' the Restructuring Plan. If the section 8 contract terms are offered under terms less favorable than those which would result by application of the OCAF as provided in the Restructuring Plan (to the extent, if any, permitted by MAHRA section 524), the owner will not be required to accept the renewal offer, but the project will remain subject to the Use Agreement for the remainder of its term.

H. Sections 401.410–.412, Determining and Adjusting Rents Under Restructuring With Project-Based Assistance

Summary of Sections

Section 401.410 provides guidance to the PAE for determining comparable market rents, as well as for an owner making a preliminary determination of eligibility under § 401.99(a)(1). Comparable market rents are rents charged for ''comparable properties'' as defined in section 512(1) of MAHRA. The determination of whether rents in a project are comparable to market rents considers only the rents for units in the project that receive project-based assistance.

Section 401.411 provides for budget-based ''exception rents'' (not to exceed 120 percent of Fair Market Rent without a HUD waiver), instead of comparable market rents, if the PAE determines that the housing needs of the tenants and the community cannot be adequately addressed through a Restructuring Plan that provides for comparable market rents, and if the project would be a negative Net Operating Income (NOI) project at comparable market rents. The preamble to the interim rule—but not the rule itself—stated that in order to receive exception rents, projects must meet the following test (which we will call the ''positive social assets'' test in the following discussion):

> [The projects] must be determined by the PAE to be positive social assets in the community whose operating expense levels and lack of debt service capacity are not a function of bad management. They should be unique, appropriately situated, and affordable housing, with no other comparable housing alternatives available in the submarket.

Exception rents are based on the factors listed in section 514(g)(3) of MAHRA. They include debt service (allowed in the interim rule only on the second mortgage under § 401.461 or to support a rehabilitation loan included in the Restructuring Plan), project operating expenses, a PAE-determined allowance for a reasonable rate of return to the owner, contributions to adequate reserves, and other necessary project operating expenses as determined by the PAE.

Section 401.412 concerns adjustment of restructured rents by an operating cost adjustment factor (OCAF) as required by section 514(e)(2) of MAHRA. A Restructuring Plan will provide for adjustments using OCAF under this section, but this section will not prevent HUD from offering renewal with rent levels higher than those resulting from OCAF adjustments, if legally authorized.

Summary of Comments

1. Difficulties in determining comparable market rents.

One commenter noted that there are unlikely to be comparable unassisted projects in low-income areas. Another noted that, for projects with special needs populations (elderly, disabled), comparisons must take special features and services into account.

HUD response: HUD agrees that determining comparable market rents will be problematic in some cases. Section 401.410 (both the final rule text and the interim rule preamble explanation) address this issue with a methodology consistent with express Congressional intent that assisted projects not be used for rent comparables.

2. ''Blended'' rents considering unassisted but restricted units.

Three commenters wanted the final rule to clarify the treatment of projects for which unassisted units with long-term affordability restrictions (such as in ELIHPA/LIHPRHA preservation projects) considered together with assisted units with above-market rents would result in a ''blended'' average rent not exceeding market comparable rents. The commenters argued that such

projects should qualify as projects with rents not exceeding market comparable rents and, therefore, should be eligible for contract renewal as exception projects under § 402.5(a)(2). This could enable the projects to achieve sufficient net operating income to achieve owner returns anticipated in preservation program Plans of Action.

HUD response: HUD will only consider units assisted under the expiring section 8 contract in determining whether the aggregate rents are higher or lower than market. Preservation projects with approved plans of action under ELIHPA or LIHPHRA are no longer eligible for the Mark-to-Market program. Please see the related response under Section II.A.3.b. of this preamble.

3. Objections to ''negative NOI project'' and ''positive social asset'' requirements for exception rents.

Many commenters objected to either § 401.411 concerning when to use exception rents, or to preamble discussion supplementing that section regarding negative NOI projects and the ''positive social assets'' test. One commenter objected to the limitation of exception rents to negative NOI projects, stating that Congress included exception rents for cases such as rural projects and inner cities or special populations needing budget-based rents and that requiring no debt service would make the ''rate of return'' factor in section 514(g)(3) of MAHRA a ''nullity''. One commenter stated that exception rents must have a second mortgage debt service component adequate to support ''reasonable likelihood of repayment'' requirement to avoid adverse tax consequences to the project owner, while another suggested that all LIHPRHA projects with Plans of Action should be treated as exception rent projects, even without negative NOI, if the statutory test is met.

Eleven commenters objected to the positive social asset test in its entirety on grounds that it is unnecessary and not provided for in MAHRA. Two of these commenters also objected specifically to the statement that exception rents should not derive from bad management. Another commenter who objected to the positive social asset test said that, if it were to be included, there must be clear guidance and objective standards in the Operating Procedures Guide on how it would be applied. Another objected to routine application of the test but felt it could be appropriate for a determination about waiving the 120 percent limit.

HUD response: HUD gave particular consideration to this issue in light of the volume of comments received from a broad spectrum of interest groups, and convened a focus group on November 18, 1998, in part to discuss the matter. We are concerned that there appears to have been widespread confusion regarding HUD's intent in including the ''positive social assets'' test in the interim rule preamble. By including the language in the preamble, and not in the rule itself, HUD tried to provide additional help to the PAEs that must apply the actual statutory test for exception rents (which also appears in the rule itself): that ''the housing needs of the tenants and the community cannot be adequately addressed'' through comparable market rents. In other words, if housing needs can be adequately addressed through a Restructuring Plan with comparable market rents, the PAE may not consider exception rents.

But equally important, exception rents also cannot be approved if a Restructuring Plan with exception rents would not adequately address tenant and community housing needs. The statute demands more than simply a negative test regarding use of comparable market rents: the PAE must be convinced that (rent issues aside) the project is worthy of restructuring in lieu of some other approach to meeting tenant and community needs. As we attempted to suggest in the interim rule preamble, this necessarily requires that a project have certain positive attributes that justify continued approval of rents that exceed the market. Since many commenters viewed the interim rule preamble as an attempt to graft onto MAHRA new considerations that were foreign to the statutory provisions, we consider it advisable not to repeat the ''positive social assets'' test as stated in that preamble. PAEs must, however, be aware of the need for meeting all aspects of the statutory objective that we have discussed above.

In particular, PAEs must recognize that exception rents should never be approved if the project would otherwise be rejected for restructuring under section 516 of MAHRA because of serious ownership or physical condition problems that cannot be remedied. A PAE's recommendation of exception rents for a project presumes that, at a minimum, the project and owner have been determined and confirmed eligible for restructuring as required by § 401.403. Thus, exception rents should not be approved for projects that are determined by the PAE to have an irreversible detrimental impact in the community, for reasons such as unacceptable management practices that adversely impact the community, or are deemed ineligible for a mortgage restructuring due to the poor condition of the project. In order to receive exception rents, the PAE must make a determination that the housing needs of the tenants and the community cannot otherwise be adequately addressed. In making this determination, the PAE should ensure there are inadequate comparable housing alternatives available in the sub-market, so that the outcome without project restructuring at exception rents would be displacement of those tenants who would experience difficulty in finding comparable housing, such as the elderly, persons with disabilities, and large families.

We agree that rural and inner city projects in certain jurisdictions will be more likely to need above-market exception rents, due to typically low market rents relative to operating expenses. The rule makes provision for PAEs to request a waiver (based on special need) of the limitations on the number of units that can receive such rents. Restricting exception rents to projects with negative NOI, or rehabilitation needs in excess of that which can be supported by new financing at market rents, is consistent with MAHRA.

The final rule provides for exception rents adequate to pay debt service on the second mortgage and the other items detailed in section 514(g)(3) of MAHRA. Because of a recent amendment to MAHRA in Pub. L. 106–74 that authorizes full payment of claims, there is no longer any need for a Restructuring Plan to provide for any nominal restructured first mortgages. Also, see Section II.K.6. of this preamble for a separate discussion of how return to owner is considered in determining exception rents. The Operating Procedures Guide specifies that the rents should be set to estimate the owner return that would be realized if there were a positive but nominal NOI, and to make payments on the new second mortgage. The second mortgage will be sized based on the amount that can reasonably be expected to be amortized by 75 percent of the anticipated net cash flow (*i.e.,* three times the owner's estimated return). A third mortgage may be required to the extent the claim paid by HUD under § 401.471 exceeds the amount of the second mortgage.

4. Exception rents should be alternative to FMR.

One commenter said that the rule should let a PAE choose exception rents under § 401.411 instead of using 90 percent of fair market rents (FMRs), which the rule identifies as a last resort under § 401.411(d). The commenter felt that FMRs are often not useful.

HUD response: To the extent the PAE is unable to develop a comparable rent using the methodology outlined in § 401.410, 90 percent FMR may be used (as a last resort) as a proxy for comparable rent as provided by statute. Exception rents for projects undergoing Mark-to-Market restructuring are limited by statute to cases where the comparable rent (or 90 percent FMR) is inadequate to meet expenses with no debt service or where the supportable debt is insufficient to fund short term rehabilitation needs.

5. Limitation of exception rents to 120 percent of FMR.

A commenter characterized this 120 percent limit as ''arbitrary'' and said that ''waivers may become the rule''.

HUD response: This limit is specified by section 514(g)(2)(A) of MAHRA.

6. Need to define ''community''.

One commenter focused on the definition of the ''community'' impacted by a failure to allow exception rents, and urged HUD to consider supply of affordable housing in an entire jurisdiction, not just a neighborhood.

HUD response: HUD will rely on the PAE's judgment to make this determination.

7. Other factors to be included in expenses.

Commenters had suggestions for expenses to consider when determining the budget-based exception rents. In addition to the comments noted above regarding mortgage debt and return to owners, two commenters stated that the return to an owner anticipated in a LIHPRHA Plan of Action should be factored into exception rents, and one commenter suggested expenses should include health and social services for elderly/handicapped projects.

HUD response: Project operating expenses may include social services (such as for elderly/handicapped service coordinators, or other Departmental initiatives such as Neighborhood Networks) to the extent they have been approved by the Department, and/or have been determined by the PAE to be efficiently managed and unique and necessary for the project's continued operation as an affordable housing resource. LIHPRHA projects with approved plans of action are no longer eligible for the Mark-to-Market Program.

8. Determination of OCAF.

a. General. Three commenters said that HUD should base OCAF on inflation indicators published outside of HUD; while another commenter ''applauded'' HUD for restricting increases to documented operating cost increases. Two others noticed that the geographical area considered when determining OCAF is left undefined in the rule. They remarked that it should not be too large to pick up local fluctuations in taxes, utilities, *etc.*

HUD response: A HUD analysis of operating cost data for FHA-insured projects showed that their expenses could be grouped into nine categories—wages, employee benefits, property taxes, insurance, supplies and equipment, fuel oil, electricity, natural gas, water and sewer. States are the lowest level of geographical aggregation at which there are enough projects to permit statistical analysis. Operating expense-related data on a more localized basis are not available on a current or consistent basis. HUD's OCAF calculations use data series prepared by the U.S. Bureau of Labor Statistics, the Bureau of the Census, and the Department of Energy. Owners may apply for a budget-based rent review in the presumably unusual case that application of the OCAF does not address unexpected project specific fluctuations. We expect, however, that such fluctuations and other temporary constraints on net operating income will be covered by excess debt service coverage.

b. Excluding debt service. Two commenters objected to excluding debt service from the expenses to be adjusted by OCAF. One said the exclusion will make projects increasingly vulnerable to periods of low occupancy and less likely to support a second mortgage, requiring some other means to boost rents; another said the exclusion will decrease attractiveness of the project to investors who want increase over time in debt service coverage.

HUD response: Congress' use of the term ''Operating Cost Adjustment Factor'' (OCAF), which has historically been applied only to operating expenses, rather than the term ''Annual Adjustment Factor'' (AAF) suggests that Congress expected the Department to not apply the increase to the entire rent. Debt service payments remain constant, so it is not appropriate to apply an inflation factor to the debt service. The debt service component of the effective gross income is the only portion that will not be inflated by the OCAF; the Reserve for Replacement deposits and the portion of the debt service coverage estimates for owner return will increase and presumably remain constant with inflation.

9. Negative OCAF.

Three other commenters objected to the reduction of rents by using negative OCAF. Two of them questioned the legality of rent reductions in light of section 8(c)(2) of the United States Housing Act of 1937.

HUD response: We have removed the reference to negative OCAF in response to section 531(a) of Pub. L. 106–74.

10. Appeals of OCAF.

One commenter wanted an owner right to appeal OCAF determinations.

HUD response: OCAF is not determined on a case-by-case basis and adjustment of OCAF through appeal for a particular project is not appropriate. However, the commenter probably was interested in the ability to appeal the rent adjustment that resulted from use of OCAF. OCAF is used for rent adjustments for projects with and without Restructuring Plans, but HUD retains the discretion to use a budget-based rent adjustment instead at the request of the owner. The statutory reference to using OCAF in Restructuring Plans, and the corresponding regulatory provision in § 401.412, does not preclude HUD from approving a larger budget-based increase when appropriate even though a project is under a Restructuring Plan.

An owner may request a budget-based rent adjustment if the owner can demonstrate that available operating revenues are insufficient to maintain a project. The published OCAF factors are based on independently produced estimates of changes in major costs items, and should prove adequate in most projects. If rent adjustments through use of OCAF are inadequate, however, budget-based review provides the most relevant basis for reviewing the adequacy of overall project funding.

I. Sections 401.420–.421, Project-Based Assistance or Tenant-Based Assistance?

Summary of Sections

These sections implement section 515(c) of MAHRA, which: (1) Provides for mandatory renewal of project-based assistance in a Restructuring Plan for projects in tight rental markets and elderly or cooperative housing projects; and (2) requires the PAE to develop a Rental Assistance Assessment Plan for any other project to determine whether assistance should be renewed as project-based assistance or whether some or all of the assisted units should be converted to tenant-based assistance. The Plan is developed by assessing the impact on eight specific areas described in section 515(c)(2)(B) of MAHRA. Section 515(c)(2)(C) of MAHRA requires periodic reporting by the PAE to HUD on certain matters concerning the form of assistance; this requirement is also included in the rule.

Summary of Comments

1. What vacancies should be considered in determining the presence of a tight market?

Six commenters objected to a PAE considering all kinds of vacant units when determining the presence of a tight market. These commenters felt that a PAE should consider only vacancies in comparable units in standard condition (neither luxury nor substandard) with rents not exceeding the payment standard for tenant-based assistance. Four commenters objected to considering vacant units in the entire market only and indicated that a PAE should determine whether the vacancy rate in the sub-market or neighborhood is at or below six percent. Another commenter said that in determining whether a project was predominantly elderly, individual phases should be considered if the project was developed in phases.

HUD response: Consistent with Congressional intent, as indicated in the Conference Report accompanying MAHRA, the tight market ''safe harbor'' for project-based assistance will be applied to metropolitan areas with vacancy rates less than or equal to 6 percent. HUD agrees that comparable units in the relevant affordable housing sub-market should be considered by the PAE in the context of the Rental Assistance Assessment Plan developed under § 401.421. The PAE has flexibility in this decision on a project-by-project basis, and is expected to apply its knowledge of the local market and use its judgment in recommending the type of rental assistance.

2. Effect of sale to cooperative.

One commenter inquired whether project-based assistance was mandated if a sale of the project to a cooperative is planned.

HUD response: Yes, project-based assistance is mandated if the project is sold to a ''nonprofit cooperative ownership housing corporation or nonprofit cooperative housing trust'' (pursuant to section 515(c)(1)(C) of MAHRA, referenced in § 401.420(a)).

3. Limit conversion approvals to public body PAEs.

A commenter suggested that only PAEs that are public bodies should be able to approve Restructuring Plans with conversion to tenant-based assistance.

HUD response: All PAEs are permitted to develop Restructuring Plans with conversion, if conversion is consistent with the final rule. OMHAR will be required to approve all Restructuring Plans, including the type of rental assistance, regardless of the category of PAE. Particular attention will be paid during review of project specific transaction, and through the reporting requirements of § 401.421(d), to projects converting to tenant-based assistance and projects that retain project-based assistance despite the general support by the tenants to convert to tenant-based assistance. Under § 401.200 of the final rule, non-public PAEs will be required to form a partnership relationship with HUD if no other public entity is involved. (Note that the final rule omits the requirement in interim rule § 401.200 that the partnership relationship meet all legal requirements for a partnership.)

4. Requirement for semi-annual reporting in § 401.421(d).

One commenter objected to what the commenter saw as a requirement for ''continuous'' reporting rather than ''one-time''. Another asked how much data gathering/tracking of tenants is required by the PAE, and at what cost?

HUD response: The reporting requirement is for semi-annual reports and is not continuous. The amount of data gathered by the PAE from the tenants will be detailed in the Operating Procedures Guide. Reimbursement of costs for gathering such information from tenants will be addressed in the PRA.

5. How should the final rule handle/present factors to be considered in the Rental Assistance Assessment Plan?

Four commenters wanted HUD to clarify the weighting of the statutory factors and to give more guidance to the PAEs. Three commenters said that all statutory factors should be set forth in full in the final rule, instead of only stating the factor regarding cost comparison. Two commenters felt that the rule should state a presumption in favor of project-based assistance in order to recognize the cost to tenants of conversion. One commenter indicated that the factor regarding ability of tenants to find housing in the local market should focus on the ability to use tenant-based assistance effectively in the neighborhood. One commenter felt that HUD should specify the criteria that will be applied to determine whether a project will receive project or tenant-based assistance. One commenter suggested that conversion to tenant-based assistance should be approved only if rehabilitation needs are so extreme that restructuring is not feasible.

HUD response: The statute and regulations are both neutral with regard to the type of assistance to be provided, assuming the project does not meet the criteria of section 515(c)(1) of MAHRA. The interim rule's specific mention of the comparative cost of project-based versus tenant-based assistance as one of the required considerations was not an indication that this criterion should be weighed more heavily than the other items detailed in section 515(c)(2)(B) of MAHRA. Consistent with the Conference Report for MAHRA, the PAE should apply its knowledge of the local market conditions, and consider the various factors, with no one factor weighted more heavily than others except to the extent appropriate on a project-by-project basis. We agree with the commenters that there may be a benefit from full presentation of the statutory items to be considered in a Rental Assistance Assessment Plan, and we have made this change in the final rule. (See Section II.W.5. of this preamble for a general discussion of including statutory language in the final rule.)

6. Must all units be assisted under a Restructuring Plan?

One commenter said the interim rule was ambiguous on whether a Restructuring Plan must commit an owner to putting 100 percent of the units in a project under project-based or tenant-based assistance, and suggested that 20 percent of the units could be reserved for unassisted ''market rate'' tenants.

HUD response: Tenants residing in all previously-assisted units will have the opportunity to receive either tenant-based or project-based assistance. Unassisted market rate tenants may be served to the extent a project converts to tenant-based assistance and tenants move out, subject to (1) the Use Agreement requirements that the minimum number of units be reserved to meet low income housing tax credit rent and income requirements and (2) the prohibition in § 401.556 of the final rule (§ 401.483 of the interim rule) against refusal to lease units to prospective tenants solely on the basis of their status as section 8 voucher holders.

J. Sections 401.450–401.453, Physical Condition of Project

Summary of Sections

The Restructuring Plan must provide for rehabilitation of the project necessary to achieve the property standards set forth in § 401.452. (In this preamble and in the final rule itself, the term ''rehabilitation'' is being used in a broad sense—comparable to the broad use of the term in section 531 of MAHRA—that includes nonrecurring maintenance (repairs) and payment into project replacement reserves.) The first step is an owner evaluation of the physical condition and rehabilitation needs of the project (including consideration of appropriate measures to ensure accessibility). The PAE is then responsible for an independent

evaluation of the rehabilitation needs (a Physical Condition Analysis, or PCA) of the project, and for reviewing and certifying to the accuracy of the owner's evaluation (which may be modified to address deficiencies identified by the PAE.) Based on the completed PCA, the PAE must consider rejecting a request for a Restructuring Plan if the PAE cannot determine that proceeding with restructuring involving rehabilitation is more cost-effective in terms of Federal resources than rejecting the request and providing tenant-based assistance for displaced tenants. Any such consideration must be made in light of the need to minimize displacement of tenants and to ensure that there are alternative housing options available in the community.

As provided in section 517(b)(7)(A) of MAHRA and § 401.452, the standard for rehabilitation to be performed upon approval of restructuring is a non-luxury standard adequate for the rental market intended at the original approval of the project-based assistance. The physical needs identified should be those necessary for the project to retain its original market position as an affordable project in decent, safe and sanitary condition (including those improvements the project requires to achieve any rentals in the non-subsidized market), resulting in a marketable project that competes on rent rather than on amenities and that meets accessibility requirements. Over the long term, the owner must maintain the project in a decent, safe, and sanitary condition based on the housing quality standards identified in § 401.558 of the final rule (§ 401.453(a) of the interim rule). For a project receiving project-based assistance, the applicable standards will be HUD's Uniform Physical Condition Standards. Otherwise, local codes will serve as the standards as long as local codes are as strict as HUD standards and do not severely restrict housing choice in the view of the PAE. In addition, any unit in which the tenant receives tenant-based assistance must comply with the housing quality standards of the section 8 tenant-based programs.

Summary of Comments

1. Use of FNMA PNA guidelines should not be eliminated.

One commenter strongly believed that the elimination of an assessment presentation format for the owner under § 401.450 would lead to unnecessary and costly disputes in processing transactions. This commenter's experience in the demonstration program led the commenter to conclude that failure to prescribe an assessment presentation format would cause a high probability of frequent disputes that focus on presentation issues rather than substantive issues.

HUD response: Based on our experience in the demonstration program, we do not believe the format of an owner's assessment of the physical condition of the property will result in delays or disputes. The information specified in Section 401.450 must be presented in a form acceptable to the PAE. The owner may update and submit previously-prepared physical inspections. The PAE is required to independently evaluate the condition of the property. The Operating Procedures Guide contains more specific information.

2. The final rule should make clear that third-party expenses for physical condition evaluation are eligible project expenses.

Two commenters suggested that the final rule should make clear that third-party expenses for the owner's physical condition evaluation are eligible project expenses. One of these commenters pointed out that a customary fee for a physical condition evaluation is in the $5,000 range.

HUD response: Third party expenses for physical condition assessments are eligible project expenses if cash flow is sufficient to support such an expense. If cash flow is not sufficient, the expense is not an eligible project expense and will not accrue or carry over.

3. Lead hazards.

One commenter felt that the final rule should explicitly require a lead hazards analysis as part of the physical conditions evaluation.

HUD response: Inspection for lead-based paint will be part of both the owner's evaluation and the PAE's PCA. This requirement is set out more fully in the Operating Procedures Guide. If such paint is found in a family project in a peeling condition on chewable surfaces, it must be remedied. If found, but not posing immediate risk, the owner will be required to submit a ''Maintenance Plan'' to prepare for any future risks/remediation. Effective September 15, 2000, all projects with section 8 project-based assistance will be subject to HUD's revised lead-based paint regulations published on September 15, 1999 (64 FR 50140).

4. Reserve account deposit.

One commenter felt that owners should be permitted to assume that their section 8 contract will be renewed for 20 years when calculating the amount of deposit to the reserve account.

HUD response: No assumptions should, or need to, be made regarding the continued availability of section 8 assistance in determining the reserve for replacement accounts. The regulatory agreement will be modified to require the monthly deposit requirement to be adjusted annually by the OCAF.

5. Concern about cost-effectiveness determination in § 401.451(c).

Numerous commenters were concerned about the cost-effectiveness determination required by § 401.451(c). Six commenters were concerned that the cost-effectiveness determination was not consistent with statutory intent. Three of these commenters asserted that it was Congress' intent that all properties that met statutory criteria and whose owners were willing to restructure should be restructured, and expressed concern that the interim rule placed cost-effectiveness above all other considerations. At least five commenters said that § 401.451(c) should be removed from the rule.

One commenter felt that the standards and methodologies used to disqualify a project based on cost-effectiveness should be published for public comment. Another commenter felt that the rule was ambiguous and that, without clearly articulated standards in the Operating Procedures Guide, PAEs would be faced with a difficult decision regarding what represented cost-effective use of Federal resources. Another commenter stated that the cost-effectiveness determination needed to be guided by an objective standard. One commenter suggested that the PAE should be given other factors to consider before concluding that a project was cost prohibitive, and that there should be a clear presumption in favor of preserving the housing stock and maintaining the project-based rental assistance. Another commenter felt that ''non-economic objectives should take precedence'' as long as a project met tenant and community housing needs. Another commenter felt that the rule must make clear that the impact on tenants and the community is an integral part of the cost-effectiveness determination and not ''some minor, peripheral consideration.''

HUD response: HUD discussed implementation of the ''cost-effectiveness'' test with a broad variety of interest groups at the focus group meeting on November 18, 1998. While PAEs are required to ensure that all repair items are cost-effective, the determination required by this section is intended to ensure particular scrutiny by the PAE of those projects that have significant rehabilitation needs so that other less costly approaches (either in the scope of work or by recommending rejection of the Restructuring Plan) are considered. We expect the PAE to

exercise judgment in balancing the competing economic and social objectives in every case rather than relying on an ''objective'' standard set by HUD.

6. PAE certification.

One commenter felt that it would not be possible for a PAE to certify the accuracy and completeness of an owner's evaluation of a project's physical condition. The commenter was concerned that requiring a PAE to certify the owner's evaluation would put the PAE in an untenable position because physical condition assessment is often complex and ''ultimately not empirical.'' The commenter suggested that the PAE merely ''confirm that the owner's plan reasonably reflects their own findings and they believe the needs are addressed cost-effectively.''

HUD response: The rule and MAHRA both require a PAE to certify an owner's evaluation of project physical condition. The PAE should give the owner the opportunity to revise the owner's evaluation after consultation regarding any disputed work items or costs. Alternatively, the PAE must recommend rejecting the Restructuring Plan. OMHAR will be responsive to PAE questions concerning rehabilitation standards; however, it is a PAE's responsibility to bring its professional judgment to bear as it evaluates the owner's proposal, the PAE's independent third party report, and tenant and local community input when developing the Restructuring Plan.

7. Property standards for rehabilitation.

One commenter felt that ''lowering the bar to modest competition'' by effectively accepting diminished physical conditions would have a negative impact on quality-of-life and public relations because eligible projects—while not luxurious—may compare favorably to other conventional properties in the area. Another commenter suggested that this ''non-luxury'' standard be removed from the final rule because it is not effective guidance (amenities affect rent and vice versa and what is an amenity in one market is a marketing necessity in another) and the standard would be cited to discourage rehabilitation to a level that might attract a mixed-income occupancy. Another commenter felt that the standard might not be consistent with the legislative goal of assuring that projects be able to function in the marketplace without assistance.

One commenter felt that calling for the ''least costly rehabilitation plan'' may cause owners to purposefully underestimate their physical condition assessments in order to avoid disqualification. This commenter suggested that rehabilitation standards should be based on actual need determined with tenant assistance. One commenter suggested that the final rule reference the physical condition standards prescribed in § 401.453 of the interim rule if a project's Restructuring Plan is to provide for continued project-based assistance. The commenter recommended that rehabilitation for these projects should be sufficient to meet the Uniform Physical Conditions Standards in 24 CFR § 5.703. One commenter felt that a lender who refinanced the first mortgage a conventional loan should be able to require whatever rehabilitation the lender considers appropriate. In addition, this commenter felt that HUD should indicate whether rehabilitation is supposed to address issues raised in the PCA or satisfy the physical conditions standards in § 401.453 of the interim rule.

HUD response: The final rule requires restoration suitable for the market for which the project was originally approved. Thus, materially diminished physical standards would not be acceptable as part of a Restructuring Plan. The PAE's inspector must ensure that the project meets the applicable physical condition standards, but immediate threats to health and safety are not eligible work items that may be deferred until completion of the Restructuring Plan. Rather, they must be corrected immediately and, since the existence of these matters violates the Regulatory Agreement, the PAE must evaluate the project's eligibility in accordance with § 401.403(b)(2)(ii). The repair work items should address the issues raised in the PCA. The rehabilitation standard requires a project that can compete in the marketplace. To the extent the market requires a particular amenity, it should be added to enable the project to compete on the basis of rent. We expect the PAE to exercise professional judgment and to apply their knowledge of local conditions in determining if the lack of an amenity would render a property unmarketable. The PAE is required to independently evaluate the physical condition of the project, including evaluating the accessiblity of the project to persons with disabilities, and to solicit tenant and local community comments. The PAE can recommend that OMHAR approve lender rehabilitation requirements so long as they are consistent with the requirements of the Restructuring Plan.

8. Physical condition standards should not apply to non-assisted market rent units.

One commenter argued that section 8 units (both project-based and tenant-based assistance) are already covered by physical condition standards by virtue of HAP contracts so that the only effect of § 401.453 of the interim rule would be to make the standards applicable to non-assisted market rent units. This commenter suggested that the final rule should provide that HQS will be applicable to assisted units in restructured properties through the terms of assistance contracts and that the local housing code should be the applicable standard for non-assisted units.

HUD response: Section 514(e)(5) of MAHRA does not permit non-assisted units to be excluded from the physical condition standards. This is a reasonable result because the entire project benefits from a mortgage restructuring. In keeping with 24 CFR parts 5.703 and related changes in other regulations, this rule recognizes that the separate section 8 HQS has been eliminated for projects with project-based assistance.

K. Sections 401.460–401.471, Mortgage Restructuring and Payment of Claims

Summary of Sections

Section 401.460 explains the standards for restructuring with a modified or refinanced first mortgage. The first mortgage will be a fully amortizing, level payment mortgage with a principal amount sustainable at rent levels that do not exceed the lower of section 8 rents allowed under the Mark-to-Market Program or rents permitted under the Use Agreement under § 401.408. The PAE should take into account any need for financing needed rehabilitation when sizing the first mortgage and determining the appropriate amount of mortgage insurance payment by HUD. The monthly payment for the first mortgage under the Mark-to-Market Program will not exceed the current first mortgage payment. Interest rates and other terms must be competitive in the market, with any fees and costs above normal processing fees to be paid by the owner from non-project sources. Due to the significant potential for conflicts of interest if the PAE provides the first mortgage financing, HUD will apply an exceptionally high level of review whenever this is proposed as part of the Restructuring Plan, with special HUD approval needed for any PAE risk-sharing under 24 CFR part 266 for a refinanced first mortgage. HUD will approve risk-sharing when appropriate in accordance with Pub. L. 106–74.

Section 401.461 provides standards for the new HUD-held second mortgage which is needed whenever the insured or HUD-held mortgage debt is written down through payment of a section 541(b) mortgage insurance payment by HUD. The second mortgage is limited to an amount that the PAE reasonably expects to be repaid by the owner, and may not exceed the difference between the first mortgage before restructuring and the modified or refinanced first mortgage after restructuring. HUD may require a HUD-held third mortgage if the amount of a partial claim under § 401.471 exceeds the principal amount of the second mortgage. The second mortgage will bear simple interest of at least 1 percent, but no more than the applicable Federal rate determined by the Department of the Treasury. The term will be concurrent with the term of the modified or refinanced first mortgage or, if the existing first mortgage is completely paid off, the term will be set by HUD. The mortgage will become due and payable as provided in § 401.461(b)(3). At least 75 percent of the project's net cash flow after payment of first mortgage debt service and operating expenses must be used to pay principal and interest on the second mortgage. The rest of the cash flow may be paid to an owner who meets certain property management and physical condition standards. HUD will consider modification or forgiveness of the second mortgage if: (1) The project has been sold or transferred to a priority purchaser under § 401.480; and (2) HUD determines that modification or forgiveness is necessary for recapitalization to preserve the project as affordable housing.

Summary of Comments

1. How should net operating income available to pay the first mortgage be determined?

a. Expenses. Commenters offered ideas about the expenses to be paid from operating income before determining ''net'' operating income for this section. One commenter listed a number of lender-required costs that should be allowed in the case of conventional refinancing. Three commenters felt that a reasonable rate of return to the owner needed to be considered; one of them said it should not be below the return already allowed. Three commenters said that the owner compensation provided under a plan of action for preservation projects needed to be considered.

HUD response: Reasonable expenses to meet requirements of the lender (whether the first mortgage is FHA-insured, HFA-originated with risk-sharing, or conventional debt) will be acceptable so long as the financing is competitive. See the discussion of return to owner at Section II.K.6. Preservation projects are no longer eligible for the Mark-to-Market Program.

b. Sizing the first mortgage. We received other comments relating to sizing the first mortgage. Two commenters objected to sizing on the basis of LIHTC rent levels if lower than comparable market rents. Two others wanted HUD to state a debt service coverage ratio (DSC) in the rule: One suggested 1.20, the other suggested at least 1.25 for conventional loans. Another said the DSC should be adequate to permit sale of the mortgage at or very near ''par''. A commenter said that a restructuring plan for a project with an existing insured second should write the second mortgage off completely before any restructuring of the insured first mortgage.

HUD response: To the extent the LIHTC rents are lower than comparable market rents, the first mortgage should be sized accordingly. While the section 8 assistance remains in place, all extra net cash flow will be applied to payment of the second mortgage so that the owner does not benefit unduly from this sizing of the first mortgage based on LIHTC rents. The owner or PAE could (with lender approval) request a waiver to allow a compensating decrease in the debt service coverage ratio in such cases. A specific DSC is not appropriate for the final rule; guidelines are contained in the Mark-to-Market Program Operating Procedures Guide. Generally we would expect a DSC of 1.2 but a higher ratio may be appropriate for smaller loans or to facilitate conventional financing.

2. First mortgage terms and conditions.

We received the following miscellaneous comments on first mortgage terms and conditions:

- The interest rate and DSC should be adequate to permit sale at or very near ''par''.
- ''Normal processing costs'' needs to be clarified (with examples of costs that should be included).
- The PAE should be able to continue with existing above-market terms if the lender requires this as a condition of accepting a partial claim or if the PAE thinks this is the best approach.
- A PAE certification of ''competitive'' terms should be conclusive, or a mortgagee certification should be conclusive absent bad faith or manifest error.
- HUD should allow balloon loans as conventional loans and base competitiveness of rates, processing fees, *etc.,* for conventional loans on the conventional market.

HUD response:

- The interest rate and other terms of any refinancing are expected to be competitive.
- Processing costs must be reasonable and customary as determined by the PAE (and the lender of any new financing); examples include title and closing costs, and loan origination fees.
- It is unlikely that OMHAR will approve above-market terms for any financing. To the extent the existing lender is unable to provide competitive terms, the owner should pursue alternative financing sources.
- The Operating Procedures Guide requires documentation that the terms are competitive within a reasonable range.
- Balloon payments are not acceptable. The modified or refinanced first mortgage must be fully amortizing through level monthly payment). The PAE may consider shorter amortization periods if warranted by the condition of the property and availability of financing.

3. Refinancing.

One commenter said that the existing lender must be given a reasonable opportunity to refinance before another lender is involved. Two other commenters urged HUD to support the use of the section 223(a)(7) program; suggestions included allowing OMHAR rather than FHA to handle processing and providing priority or incentives for section 223(a)(7) refinancing to finance rehabilitation. Two commenters object to requiring special HUD approval for PAE risk-sharing as unnecessary and leading to delays. Finally, a commenter said that a small (under $300 thousand) first mortgage, even if supportable by rents, would be difficult to obtain on competitive terms so that a refinancing of a small first mortgage should not be required to take out the lender who will not accept a partial payment of claim.

HUD response: The final rule requires the owner to contact the mortgagee prior to seeking other sources of funding for the Restructuring Plan. This issue is addressed in more depth in the Operating Procedures Guide and other guidance from OMHAR. The issues raised by the suggestion supporting the use of the section 223(a)(7) program involves delegations of authority within HUD and will be addressed in the Operating Procedures Guide. We are neutral as to the source of new financing so long as the terms are competitive, except to the extent that section 219 of Pub. L. 106–74 requires HUD to use risk-sharing. Questions involving PAE risk-sharing raise conflict of interest

issues to be decided on a case-by-case basis after expeditious but thorough technical reviews. We anticipate the market will set the terms of new financing, in part dependent on the size of the loan, and acknowledge that a good faith effort by the owner to obtain new financing on reasonable terms may not succeed. A PAE then may consider a Restructuring Plan with full payment by HUD of a section 541(b) claim and an increased second mortgage. However, it is not acceptable to allow above-market rents to support the existing debt due to a perceived difficulty in refinancing.

4. Second mortgage terms and conditions.

a. Interest rate. We received the following suggestions regarding interest on the second mortgage:

• Clarify in the Operating Procedures Guide that the interest rate should be low enough so that an owner is clearly likely to repay; the interest rate should be 1 percent unless HUD requests otherwise (or 0 percent if the aggregate loan amount exceeds 100 percent of value).

• Permit a 0 percent rate since it is not ruled out by the Revenue Ruling.

• Set standard at 0 percent except when that would lead to payoff of the HUD-held second and third mortgage in less than 10 years.

HUD response: For interrelated legal and policy reasons, we have elected to retain the 1 percent minimum interest rate. Our interpretation of section 517(a)(2) of MAHRA is that some interest is required to be charged on the second mortgage. The minimum rate that we have selected is nominal and should not cause undue burden on the mortgagor. Additionally, the factual premise of IRS Revenue Ruling 98–34 includes a statement that the new second mortgage ''provides for interest''.

b. Other second mortgage terms and conditions. We received the following miscellaneous comments on second mortgage terms and conditions:

• Set the term ''concurrent'' rather than ''concomitant'' with the term of the first.

• Acceleration for violation of HUD requirement should be only for material violation of a material HUD requirement, and should be allowed only after written notice to owner of the violation.

• HUD should ask for a statutory change allowing for longer terms.

• Use a standard form.

• HUD should specify conditions to be in second mortgage, consistent with first mortgage.

HUD response:

• We agree that the term ''concurrent'' is preferable.

• There are adequate safeguards in the final rule to guard against unfair acceleration of a second mortgage. Safeguards include a requirement of materiality for violations (now included expressly), and notice and an opportunity to cure prior to acceleration of a second mortgage. Additionally, the rule provides an administrative dispute and appeal procedure for any acceleration decision (unless acceleration is based on payment or termination of the first mortgage, or unauthorized sale and assumption, as provided in MAHRA).

• Alteration of the second mortgage term would require an amendment of the statute. HUD has no basis for seeking such an amendment at this time.

• The Operating Procedures Guide will provide a standard form for second mortgages. The terms of the second mortgage are largely set by MAHRA and are detailed in the final rule and the Operating Procedures Guide. The second mortgage is different in nature from the first mortgage and will not be identical to the first mortgage.

5. Forgiveness/modification of second mortgage.

Two commenters said that forgiveness/modification should be available for a priority purchaser whether or not the property has been disqualified for restructuring under existing ownership. One commenter argued that forgiveness should also be allowed for a limited partnership purchaser controlled by priority purchaser.

HUD response: Section 401.461(b)(5) of the final rule allows modification or forgiveness of the second mortgage if certain conditions are met. This availability of modification or forgiveness is not dependent on the existing owners being disqualified from restructuring. See Section II.A.1.c. of this preamble for a discussion of a limited partnership controlled by a public body.

6. Return to owner.

One commenter opposed allowing the PAE to set the owner's share of net cash flow below 25 percent, arguing that a lower share will discourage owners from restructuring. Another commenter said that an owner right to 25 percent may be incentive for owners to neglect upkeep of project (*i.e.,* in order to reduce expenses and boost net cash flow) and that tenants should be involved in determining if a project meets the property management standards as a precondition to paying the owner share.

HUD response: HUD is sensitive to the fact that restructured projects (particularly those with large decreases in rents) will have tighter operating budgets and thus will require larger debt service coverage ratios to compensate. Section 517(a)(3) of MAHRA restricts the owner's return to a maximum of 25 percent of Net Cash Flow. There is no statutory provision for additional return to an owner, even for exception rent projects or other projects that may previously had an approved rate of return that would permit larger payments to the owner. Section 514(g)(3)(D) of MAHRA provides for an allowance for a reasonable rate of return to the owner when determining the level of exception rents, but we do not consider this an allowance for an additional owner return beyond that permitted for non-exception rent projects. The setting of rents above market will provide for the return permitted by section 517(a)(3) (assuming the owner's operation of the project is efficient so that Net Cash Flow meets or exceeds the underwriting estimate.)

While the typical return permitted by a Restructuring Plan will not be less than 25 percent of the Net Cash Flow, the PAE will retain discretion to negotiate the amount on a case-by-case basis. Further, to the extent the potential for LIHTC rents in the absence of project-based assistance constrains net operating income for underwriting purposes, the project will effectively be oversubsidized during the time project-based section 8 assistance is provided. The portion of Net Cash Flow to pay the second mortgage must be increased accordingly. HUD or the PAE will require the project meet management and physical condition standards as a condition of distribution of the owner's portion of the net cash flow. Tenants (and other interested parties) can address their concerns to HUD or the PAE.

7. Third mortgage.

Four commenters opposed the possibility of a HUD-held third mortgage as provided in the interim rule. One said it would lead to ''overleveraging'' a project; two others said a third mortgage should be limited to an amount reasonably likely to be repaid that was excluded from the second only because of statutory limitations on the aggregate of the first and second mortgages. Another commenter suggested using budget-based exception rents whenever a third mortgage would otherwise be needed. Another commenter asked when a HUD-held third mortgage would be forgivable.

HUD response: A third mortgage, when necessary, would not ''overleverage'' a project. First, it would require no payments on principal or interest until the second mortgage is satisfied. Second, a third mortgage would accrue only nominal interest and this interest will not compound. Third, the final rule allows a PAE to negotiate a reduction of the maximum third mortgage amount that would otherwise be required initially under a Restructuring Plan, within limits set by HUD, in order to recognize the imputed tax consequences to the owner of the restructuring. The Operating Procedures Guide will initially allow the PAE to negotiate a reduction of the initial mortgage amount by up to 30 percent. Finally, the final rule permits HUD to forgive or modify the third mortgage on the same conditions as apply to a second mortgage under § 401.461(b)(5). Exception rents are designed to address specific housing needs of tenants and communities and may not be used solely to prevent a section 541(b) claim. Accordingly, we have rejected the suggestion to use budget-based exception rents whenever a third mortgage is required.

8. Claims.

One commenter said the rule should include in the partial claim amount accrued interest on the mortgage amount to be prepaid by the claim at the note rate up to the date of prepayment. Another commenter concluded that payment only of a partial rather than a full claim would mean that exception rents would never be allowed under § 401.411(b) because that provision makes no allowance for payment of any first mortgage debt remaining after a claim payment. A commenter said that HUD should clarify in the final rule that a servicer incurs no obligation to Ginnie Mae security holders for accepting a ''compelled'' partial payment from HUD, and HUD should indemnify the lender.

HUD response: When HUD pays an insurance claim for a mortgage that is in default, the claim includes an amount for the unpaid interest that would have been included in the defaulted payments. There is no similar need to compensate the mortgagee through a section 541(b) claim, which is made only for a mortgage that is not in default. The commenter is correct that HUD will restrict debt service paid from exception rents to payments on the second mortgage for negative Net Operating Income projects or to payments on a new rehabilitation loan, but exception rents will be needed only for projects which also require a full payment of claim and which, thus, will not continue the existing first mortgage even at a nominal level. We have no legal authority, or program interest, in becoming involved in a lender's relationships with Ginnie Mae security holders. Moreover, the commenter's concern about ''compelled'' partial claim payments is unfounded. Under the final rule, OMHAR or FHA will not compel a lender to accept a partial claim payment. If the lender is not able to obtain approvals from investors, such as Ginnie Mae security holders, needed to accept a partial claim payment, the owner must refinance the first mortgage with a lender willing to make a new loan that will pay off the first mortgage amount in excess of the partial claim payment.

L. Sections 401.472–.473, Funding of Rehabilitation

Summary of Sections

Section 517(b)(7) of MAHRA and § 401.472 identify some potential sources for funding needed for rehabilitation of the project. The interim rule includes the requirement of section 517(b)(7)(B) of MAHRA that an owner contribute from non-project funds at least 20 percent of the total cost of rehabilitation. The preamble to the interim rule stated that a reasonable proportion of the owner's contribution must come from non-governmental resources, which we estimate would be a minimum of 3 percent of the total cost of rehabilitation. One of the potential Governmental sources of rehabilitation funding is the grants authorized by section 236(s) of the National Housing Act. Section 401.473 addresses the use of these grants in connection with restructuring.

Summary of Comments

1. Opposition to 20 percent owner contribution requirement.

Three commenters wanted HUD to exempt nonprofit owners from the requirement for a contribution of 20 percent of rehabilitation expenses. One commenter observed generally that owners of all types are unlikely to contribute 20 percent. Four others opposed the requirement without an incentive to make the contribution. These commenters suggested treating the contribution as a self-amortizing market-rate loan to the project that would be repayable as project expense, or providing some type of priority return or some set rate of return.

HUD response: The owner contribution is required by section 517(b)(7) of MAHRA and the return to the owner is constrained by section 517(a)(3) of MAHRA. Other than the exemption permitted by statute for housing cooperatives, nonprofit owners cannot be exempted from the owner contribution requirement without a statutory change. Eighty percent of the rehabilitation costs will come from sources other than owner contributions, and the interim rule preamble and Operating Procedures Guide both allow the owner to include any available funds from other government sources to meet their contribution requirements, except as discussed in the following topic.

2. Opposition to limit on funding from governmental resources.

One commenter opposed a limitation on funding from nongovernmental sources while another said that any such limitation needed to be in the rule. Five commenters said that all nonprofit owners should be exempt from the limitation, while two others said the PAE should be able to waive it for nonprofit owners. Two commenters asked HUD to clarify that equity raised by syndicating Low-Income Housing Tax Credits (LIHTC) is a non-governmental source of funding.

HUD response: The preamble to the interim rule contained two points of elaboration on the 20 percent owner contribution requirement that appears in MAHRA and in the interim rule. The preamble stated that a ''reasonable proportion'' must come from non-governmental sources, and estimated that this proportion would be set at a minimum of 3 percent. We continue to believe that it is reasonable to expect each owner to contribute towards the cost of rehabilitation from the owner's own resources, because the owner will benefit from the resulting increase in project value. We recognize that owners of restructured projects may have severe limitations on the ability to make additional investment in the project, but in cases where other public funds are available, owners will cover only a small part of the costs from their own resources. The commenters did not provide convincing evidence that these preamble requirements would prevent PAEs from developing Restructuring Plans with all necessary and cost-effective rehabilitation—whether for for-profit or non-profit owners. Because of the substantive impact of our decision to require owners to use their own resources toward partial implementation of the statutory requirement for an owner contribution, we have decided that the matter properly belongs in the text of the final rule itself. The precise level of required non-governmental resources, however, will continue to be set in the Operating Procedures Guide.

PAEs will have limited ability to request waivers of this regulatory requirement in exceptional cases (*e.g.* to facilitate the transfer of a troubled project to a priority purchaser), but no waiver is possible for the statutory 20 percent requirement. As stated above, MAHRA permits housing cooperatives to be exempted from the owner contribution requirement. Broadening this exemption option would require a statutory change. Equity contributions from the syndication of LIHTC will be considered a non-governmental source of funding for rehabilitation funding purposes, but will trigger a thorough technical review of the Restructuring Plan.

3. Other comments regarding 20 percent requirement.

One commenter wanted HUD to clarify that non-Federal government funding such as State/local grants or loans will be counted in the 20 percent owner contribution. Three commenters asked about borrowed funds as part of the contribution; one of them specifically mentioned insured section 223(a)(7) or 223(f) refinancing loans secured by the project and another mentioned conventional refinancing of the project. One commenter wanted the rule to specify conditions for a PAE requirement for a contribution of more than 20 percent.

HUD response: FHA-insured loans (or conventional secured debt that is not subordinate to the § 401.461 second and third mortgages) are considered project resources and may not be used to fund the owner's contribution. The PAE has discretion to negotiate a larger owner contribution. State/local grants or loans can be used to meet most of the owner's contribution. OMHAR has provided further guidance in its Operating Procedures Guide concerning the source of funds that an owner may utilize toward rehabilitation financing.

4. Comments regarding use of project accounts for rehabilitation.

One commenter cautioned against violating an owner's contract right under the regulatory agreement to distribution of surplus cash. Another commenter suggested that the lender for a conventional refinanced first mortgage should be able to use funds in project accounts to establish escrows and reserves required by the lender's usual underwriting standards.

HUD response: Section 517(a)(3) of MAHRA changes the distribution of surplus cash. The first and second mortgages for a project restructured under the Mark-to-Market Program will reflect the statutory change. As part of a closing, owners will be required to execute a Modification of Regulatory Agreement. It will modify the terms of an old or new FHA Regulatory Agreement, reference the Restructuring Plan documents as controlling the owner's distribution, and specifically delete the requirement of a residual receipts account as long as the second or third mortgages are in place. In a non-FHA refinancing the existing Regulatory Agreement is canceled.

Section 517(b)(6) of MAHRA authorizes use of project accounts in connection with restructuring but does not preclude a PAE (as part of a Restructuring Plan involving conventional financing) from recommending the use of existing project account balances to fund the initial deposit to a new reserve for replacement account or to fund tax and insurance escrows.

5. Section 236(s) rehabilitation grants.

Three commenters said that HUD should target rehabilitation grants to new priority purchasers as well as existing nonprofit owners for projects undergoing restructuring; two of them also said that section 236(s) grants should be available on a preferential basis to nonprofit owners or below-market projects renewing under part 402 without restructuring. Two commenters pointed out that treating section 236(s) grants in a rule only for projects undergoing restructuring (*i.e.,* part 401) puts exception projects seeking grant money at a disadvantage; one of them asked that HUD add a new section to part 402 on section 236(s) grants. Finally, one commenter asked whether section 236(s) grants can be structured as loans to avoid adverse tax consequences to owners.

HUD response: As noted in the preamble to the interim rule, HUD is pursuing a separate rulemaking procedure regarding use of the section 236(s) grant authority outside of the Mark-to-Market program. To the extent a Mark-to-Market restructuring generates Interest Reduction Payment (IRP) recaptures, those funds will be used to assist with rehabilitation financing for the restructured property, or for other properties through procedures to be defined in the separate rulemaking.

6. Funding of rehabilitation through claim amount.

A commenter suggested that HUD's intent behind § 401.472(a)(2) regarding facilitating rehabilitation through the claim amount was to permit the claim to be large enough to reduce the first mortgage debt so the project rents could support a refinanced first mortgage that paid off remaining debt and financed rehabilitation. Another commenter suggested that it would be simpler to pay rehabilitation costs directly from the FHA insurance fund instead of through a larger partial claim/smaller first mortgage.

HUD response: The first commenter has correctly interpreted HUD's intent in § 401.472(a)(2). Unlike the demonstration program, the Mark-to-Market Program does not include HUD authority to directly fund rehabilitation through a payment from the FHA insurance fund as suggested.

M. Section 401.480 Sale or Transfer of Project

Summary of Section

This section covers the sale or transfer of a project undergoing restructuring at the owner's initiative (*i.e.*, a voluntary sale) or following a determination that the current owner is ineligible for restructuring (*i.e.*, an involuntary sale). A PAE will develop a Restructuring Plan with an involuntary sale only if, within 30 days of notice of rejection, the owner notifies HUD or the PAE of the owner's intent to transfer the property. The owner must also provide a notice to potential purchasers that describes the project and the procedure for submitting purchaser offers; the notice is subject to review and approval by HUD or the PAE. The owner must distribute and publish an approved notice as required by HUD. This section gives a preference to certain ''priority purchaser'' groups, defined as tenant organizations, tenant-endorsed community-based nonprofit organizations, and tenant-endorsed public agency purchasers. The owner must inform the PAE of any intention to accept a purchase offer. An eligible owner desiring to sell or transfer a project through a voluntary sale should provide notice as part of its initial request for a Restructuring Plan or at any later time when it is still feasible to develop a Restructuring Plan involving sale or transfer, but the owner is not otherwise subject to the requirements of this section. All project sales are subject to PAE approval and HUD approval of the Restructuring Plan.

Summary of Comments

1. HUD should be responsible for sale of projects.

Three commenters felt that, in order to better protect the interests of tenants, HUD should maintain overall responsibility for the sale of projects.

HUD response: OMHAR will maintain overall responsibility for all aspects of the Mark-to-Market program, including approval of the sale of projects. We will carefully review PAE recommendations and input from tenant and local

community groups, whenever a project is proposed for sale or transfer.

2. Preferences for priority purchasers.

Four commenters were concerned about preferences for priority purchasers. One commenter argued that the interim rule improperly creates an absolute priority instead of the preference provided in MAHRA. The commenter further argued that, in the case of voluntary sales unrelated to disqualification, MAHRA does not support even a preference for priority purchasers and the owner should have sole discretion to choose the project purchaser. Three commenters questioned the rationale for granting a preference to priority purchasers because tenant and community-based groups are not necessarily better at maintaining a project as decent, safe, and affordable housing than other nonprofit or for-profit groups. According to the commenters, qualified nonprofit or for-profit groups could include organizations that would not meet the definition of priority purchaser because of a city-wide mandate or a tenant-endorsed non-profit housing group with a demonstrated track record.

HUD response: In the event of an involuntary sale or transfer of a project, the Operating Procedures Guide will permit offers to be accepted only from priority purchasers during a reasonable period (to be determined by HUD, currently 4 months) after notice of sale or transfer. After that period there are no restrictions on sale or transfer of the project. The rule also states that voluntary sales or transfers do not have any priority purchaser requirements. The preference for priority purchasers in the event of involuntary sale or transfer is based on the requirements of MAHRA and HUD's goal of maintaining safe and affordable housing for low income individuals and families. Priority purchaser offers will be subject to substantive review by both the PAE and OMHAR. Offers will be rejected if not in the best interest of the community and HUD. MAHRA requires priority purchasers to have a local community or tenant base. Otherwise-capable non-profits can partner with such groups to obtain this preference.

3. Priority purchasers and competitive sales.

Four commenters were concerned about the effect of the preference for priority purchasers on an owner's ability to demand competitive offers. Two commenters suggested that the final rule should clarify how long an owner must hold a property exclusively for sale to priority purchasers and what actions an owner must take to demonstrate a good faith effort to sell to a priority purchaser. One of these commenters felt that PAEs should not be required to withhold approval of a sale to a non-priority purchaser for an unreasonably long period of time. One commenter felt that the final rule should give wide discretion to the PAE to approve non-priority purchasers and that the PAE should be able to waive the requirement for tenant approval if approval is unreasonably withheld.

HUD response: Priority purchasers will have a preference only in the event of an involuntary sale or transfer of a project, and then only for a limited period of time. This preference should have a minimal impact on an owner's ability to demand competitive offers because the Operating Procedures Guide requires that priority (and all) purchaser offers be reviewed carefully by both the PAE and OMHAR. The Operating Procedures Guide also requires that the PAE must attempt to mitigate losses to the Government while not placing sole priority on purchase price. In the event the PAE believes tenant approval is being unreasonably withheld, OMHAR should be consulted on a case-by-case basis.

N. Sections 401.481–.484, Other Requirements of Restructuring Plan

Summary of Sections

Section 401.481 explains the subsidy layering certification that a PAE must make under section 514(e)(7) of MAHRA. The purpose of the subsidy layering certification procedure is to ensure that any HUD assistance provided to the owner of a project under the Restructuring Plan is no more than is necessary to permit the project to continue to house a tenant mix that is comparable in income to the tenant income mix of the project before the Restructuring Plan is implemented—after taking into account other Federal, State, or local governmental assistance of any kind such as grants, loans, guarantees, or tax credits or other tax benefits. HUD may rely on the PAE's certification if HUD has already approved the PAE to do subsidy layering certifications for other purposes.

Section 514(e)(9) of MAHRA prohibits refusal to lease a ''reasonable number'' of units to section 8 voucher holders because of their status as voucher holders. Under § 401.483 of the interim rule (§ 401.556 of the final rule), the Restructuring Plan will not permit an owner to reject any prospective tenants solely because of their status as voucher holders. (Note that title V of Departments of Veterans Affairs and Housing and Urban Development, and Independent Agencies Appropriations Act, 1999, merged the voucher and certificate programs into a consolidated voucher program. HUD has proposed to Congress technical corrective legislation that will conform MAHRA to this change. The final rule refers solely to vouchers to carry out clear Congressional intent, but the term ''vouchers'' is defined to include any tenant-based assistance under the definition in MAHRA, which is also the section 8 definition.)

Section 401.484 of the interim rule (§ 401.560 of the final rule) implements part of section 518 of MAHRA, which requires a PAE to establish management standards for a project pursuant to HUD guidelines and consistent with industry standards.

Summary of Comments

1. Subsidy layering limitations on HUD funds.

One commenter was ''pleased'' that HUD allows PAEs with delegated authority for subsidy layering to serve that function under MAHRA. Another commenter questioned the interim rule's reference to limiting assistance to that needed to continue housing ''tenants with an income mix comparable to the income mix of the project'' before restructuring. The commenter asked how this could be reconciled with a possible need to reconfigure project (*e.g.*, convert efficiencies to 1-bedroom units).

HUD response: We do not intend to limit the ability of owners to reconfigure projects and we thank this commenter for pointing out this potential misunderstanding. We have amended language in § 401.481 to address this issue.

2. Leasing units to voucher holders.

Among commenters favorable to this section, one generally supported it, another wanted the 100 percent requirement to be in a recorded instrument as well as in the Restructuring Plan, and the third wanted HUD to require an owner to ''seek and accept'' tenant-based assistance for units without project-based assistance. Two commenters opposed the section, stating that it is unreasonable to require 100 percent of units to have tenant-based assistance and that HUD should encourage mixed-income projects. One of them specifically objected to requiring an owner to accept tenant-based assistance that does not permit the owner to realize market rents. One commenter said that the rule needs to specify the term during which this section applies. Three commenters suggested that owners should not be under an obligation to

renew tenant-based contracts unless the tenant is lease-compliant. One commenter was concerned that this section could establish an unconditional renewable lease.

HUD response: We agree with the comment that the non-discrimination provision of § 401.483 of the interim rule (§ 401.556 of the final rule) should be included in the recorded Use Agreement and we have amended § 401.408 accordingly. The final rule does not require an owner to renew contracts with non-compliant lease holders and HUD will not require owners to ''seek and accept'' tenants with tenant-based assistance. The final rule merely prohibits the owner from discriminating solely on the basis of the tenant's (or potential tenant's) status as the holder of a section 8 voucher. The rule does not require the owner to rent to tenants who are unable to pay the rent or are otherwise not in compliance with the terms of a lease.

3. Property management standards.

a. Need uniform standards. One commenter urged HUD to establish uniform standards that reflect expected outcomes.

HUD response: The final rule reflects the statutory requirement that the PAE establish management standards consistent with industry standards and with minimum general requirements from HUD (section 518 of MAHRA). More specific guidance on reporting and compliance is in the Operating Procedures Guide. Projects with FHA mortgage insurance or a HUD-held mortgage after restructuring will be required to comply with the Regulatory Agreement and all relevant HUD Handbooks and Directives (including the HUD Real Estate Assessment Center's procedures), except to the extent specifically modified by the Restructuring Plan, the Operating Procedures Guide, the final rule, or MAHRA.

b. Suggestions for language changes. Two commenters urged HUD to make the requirement for a manager to maintain good relations with tenants more objective (*e.g.*, it should relate to tenants' opportunity to comment and respect for tenants' rights, not the level of tenant satisfaction with manager). One of these commenters also said that a reference in the preamble to less than ''satisfactory'' HUD review should apply only if a PAE agrees with HUD findings and the findings are not cured in reasonable period after notice. The same commenter suggested the following specific language changes:

- Add to paragraph (b) an express requirement for HUD's guidelines to be consistent with industry standards.
- Strike ''through preventative maintenance, repair or replacement'' from paragraph (b)(1) to avoid unproductive arguments over methods of achieving goal.
- Delete an unclear reference in (b)(2) to routine cleaning—which the commenter said duplicates provisions of the physical condition standards.
- Add a provision that a management agreement should permit the PAE to terminate the manager for cause.

HUD response: In our opinion, the commenter's suggested language regarding tenant relations is less, not more, objective. Adding ''consistent with industry standards'' to paragraph (b) is redundant since it is already specified in paragraph (a). The language regarding ''preventative maintenance, repair or replacement'' is necessarily more specific than just requiring maintenance of the long term physical integrity of the property. The requirement for routine cleaning, while admittedly duplicative, is appropriate for an explicit statement in this context. HUD does not at this time contemplate delegating the authority to require new management; the Regulatory Agreement/Management Certification contains a provision permitting HUD to require the owner terminate the management agreement.

c. Management fees.

Two commenters wanted HUD to ensure a management fee system that provides adequate compensation and removes the link to (possibly falling) rent levels or that carries forth current method with higher percentage of rent to reflect drop in restructured rents. Another commenter asked HUD to clarify that allowable management fees will not be reduced as a result of restructuring.

HUD response: Underwriting standards for management fees (and other operating expenses) are detailed in the Operating Procedures Guide. While management fees may well be reduced as a result of restructuring, the fee should be adequate to competently manage the property as an affordable housing resource. To the extent the fee has been based on a percentage of the gross rent and will be inadequate after reducing the rents as a result of restructuring, the percentage yield will be recalculated based on an adjusted comparable market fee and adjusted with the OCAF.

O. Sections 401.500–401.501, Participation by Tenants, Community, and Local Government

Summary of Sections

Under §§ 401.500 and 401.501, a PAE must solicit and document the consideration of tenant and local community comments. These sections (and the related new §§ 401.502 and 401.503 in the final rule) describe the minimum procedures for ensuring that third parties affected by the restructuring of a project through the Mark-to-Market Program are kept informed and provided the opportunity to provide comments at crucial stages of the process, including required notices and public meetings at which the PAE will hear presentations and receive comments on the desired contents of a Restructuring Plan and a Rental Assistance Assessment Plan (if one is required), and on any proposed transfer of the project.

Summary of Comments

In the following summary we have included all comments relating to participation by tenants in the restructuring, implementation and contract renewal process, even if the comments were specifically directed to a subject covered in a different section of part 401 or part 402.

1. General.

A significant percentage of commenters (approximately 26 commenters) were dissatisfied with the level of tenant, community, and local government participation guaranteed by §§ 401.500 and 401.501 of the interim rule. These commenters all felt that tenants, and the community and local government, needed to be given the opportunity for broad participation in the entire restructuring process.

Almost all of the commenters argued that broad tenant and community participation was vital for the success of the Mark-to-Market Program. A few commenters also argued that the interim rule failed to follow both the letter and the intent of MAHRA by not providing tenants with the ability to offer ''timely and meaningful'' input at the various stages of the restructuring process. Some commenters specifically cited section 514(f)(2)(c) of MAHRA as requiring that tenants be consulted on the completed rental assistance assessment plan.

The following table summarizes the general suggestions made by commenters (a number of more specific subject areas are discussed later):

Suggestion	Number of commenters
Tenants should participate fully in PAE selection	6
Tenants should participate in decisions to find an owner ineligible for restructuring or section 8 renewals	2
Tenants/community should have right to have access to relevant documents and information, before they are final, in order to be able to give meaningful input to documents and the overall process. For example, right to access to draft appraisals, physical condition analyses, rental assistance assessment plans, capital needs assessments, management reviews, comparable market rent analyses, proposed restructuring plan, data used in making any decisions about the need for project versus tenant-based assistance, cost-effectiveness of rehabilitations, or disqualification of the owner, and other information necessary for meaningful tenant input	10
Funds should be provided either to PAE or tenant groups to support tenant participation activities	4
Tenants/community should be given notice of and allowed to participate fully in all aspects of restructuring process. For example, in developing and/or reviewing rehabilitation analysis restructuring plan, cost-effectiveness determination under § 401.451(c), any proposed transfer of property, eligibility/disqualification decisions, restructuring/renewal decisions, development of PRA, negotiation of Restructuring Plans, conversions to tenant-based assistance, formulation of rehabilitation and management assessments, Restructuring Commitments	18
Tenant participation and notice in monitoring of PAE's actions under PRA, and further participation of tenants in future implementation and enforcement of the Restructuring Plan, is needed	7
Many more meetings should be required and public comments accepted throughout entire restructuring process	6

HUD response: HUD recognizes the importance of providing opportunities for full and informed involvement in all aspects of project restructuring. Such opportunities, however, must be provided in a manner that permits efficient and timely development of a Restructuring Plan that responds not only to tenant needs but also to wider community and local government needs, the needs of project owners, and the social and financial goals of the Federal Government reflected in MAHRA. HUD considers the tenant participation opportunities provided in the interim rule as consistent with the express minimum demands of MAHRA, but we agree with the commenters that the final rule should require more in order to implement the spirit of the statute. While it is important to streamline the restructuring process and to allow the PAEs flexibility to respond to local conditions, we share the commenters' concerns that the interim rule was not prescriptive enough to guarantee that the tenants and local community groups would be provided adequate opportunity for meaningful participation in every case.

In the interests of providing even greater opportunities, we have concluded that a second consultation meeting should be mandated as an opportunity for tenants and local community groups to review and comment on the PAE's proposed Restructuring Plan (including plans for future section 8 assistance) before the PAE submits the Restructuring Plan to OMHAR. As a minimum, the PAE will be required to conduct two (rather than just one) public meetings. Section 401.500(c) and (d) now require public access to the draft Restructuring Plan and a second meeting no later than 10 days prior to submission to OMHAR. The PAE must document and provide a brief narrative explanation of the disposition of all tenant and local community comments.

This revised procedure will not only ensure appropriate early input into the development of the Restructuring Plan, but also will provide a safeguard against inadequate consideration or misunderstanding of tenant and community concerns by the PAE, without unduly hampering timely and efficient completion of the Restructuring Plan. Persons given the opportunity to comment on a proposed Restructuring Plan will not have appeal rights under subpart F. HUD emphasizes that the tenant and community participation procedures mandated by the final rule are minimum procedures that may be supplemented by a PAE to the extent consistent with the objectives of MAHRA and the local circumstances. Other changes intended to strengthen HUD's collaborative efforts with tenants and local communities are detailed in the following sections.

2. Involve others in Rental Assistance Assessment Plan.

Two commenters said that the PAE needed to consult with tenants, the locality, the PHA and the owner before developing this plan, and specifically with regard to the tenants' ability to use tenant-based assistance. Five commenters said that tenants should have a right to comment on the plan after it was developed, with some commenters arguing that this is required by section 515(f)(2)(C) of MAHRA. One commenter suggested that any conversion to tenant-based assistance should require the approval of ⅔ of the tenants.

HUD response: The initial consultation meeting required by the interim rule provides the opportunity requested by commenters for input prior to the development of the Rental Assistance Assessment Plan. HUD does not interpret section 515(f)(2)(C) as requiring an additional opportunity for tenant comment after that plan is completed, but will provide such opportunity as part of the second consultation meeting to be held upon completion of the draft Restructuring Plan as described above.

3. Intermediaries administering technical assistance grants should receive notice.

One commenter suggested that Intermediaries administering technical assistance grants for the Mark-to-Market Program should be recognized as ''affected parties'' for the purpose of receiving notices. This commenter felt that this information was required for Intermediaries to perform their functions in a timely and efficient manner.

HUD response: HUD agrees that this requirement is appropriate.

4. Notices in other languages.

One commenter suggested that notices be provided in other languages.

HUD response: HUD will publish general information brochures in various languages. While the PAE and the owner should make every effort to provide notices (or translation services) to reach non-English speaking tenants and local community groups, it is impractical to require this by regulation.

5. Notice to all tenants and posted in project.

A number of commenters felt that all notices should be delivered to each tenant and tenant organization, as well as posted in each project.

HUD response: HUD agrees with this comment.

6. Right to organize.

Tenants should be able to organize in projects that have been restructured through the Mark-to-Market Program.

HUD response: As explained in HUD's corrective rule published on

December 28, 1998 at 63 FR 71373, section 599 of Pub. L. 105–276 amended section 202 of the Housing and Community Amendments of 1978, concerning tenant participation in certain multifamily housing projects, to apply that section to all projects with project-based assistance or enhanced (''sticky'') vouchers under the Mark-to-Market Program. Tenant participation under section 202 (including the right to organize) is the subject of 24 CFR part 245. We issued a separate proposed rule to amend part 245 to reflect section 599 and to make other changes (64 FR 32781, June 17, 1999). A final rule is being developed.

7. Tenant role in PAE selection.

Three commenters were concerned that tenants were not given any role in selecting PAEs. Two commenters also felt that tenants should have a role in the negotiation and renewal of PAE agreements. One commenter pointed out that since PAEs would be making decisions about the future of tenants' homes, it would be vital for tenants to have a say in their selection.

HUD response: We encourage tenants to work with the PAEs. Experience working with the tenants has been a threshold criterion in selecting the PAEs. OMHAR will take appropriate action if justified complaints against a PAE are received from tenants.

8. Rent levels.

One commenter said that PAEs will not be able to adequately review an owner's initial market rent determination, so that HUD must let tenants/community advocates review and comment. Three commenters argued that tenants should have the right to comment on or appeal proposed rent increases or petition for decreases to match cost decreases.

HUD response: The PAEs' market knowledge and ability to manage the independent third party review appraisal function were threshold criteria in selecting the PAEs. The PAE is, however, required to solicit tenant and local community comment on this and other issues in the context of developing the Restructuring Plan. While tenants and other interested parties may comment on rent adjustments, they will not have an appeal right.

9. Use Agreement changes.

A commenter felt that tenants and tenant organizations should be notified of any changes to the Use Agreement.

HUD response: HUD agrees with this comment.

10. Monitoring and compliance activities.

A number of commenters were concerned that tenant participation was not sufficient in monitoring and compliance activities. One commenter felt that the final rule should give tenants and the community the right to enforce the Restructuring Plan to achieve compliance. Another commenter felt that tenants and other affected third parties should be given notice of all monitoring and compliance visits.

HUD response: Tenants and other groups are specifically listed as third party beneficiaries of the Use Agreement in § 401.408(i) of the final rule. Appropriate notice of monitoring and compliance inspections will be provided.

11. Transfer of properties and tenant participation.

Three commenters emphasized that the final rule should require more tenant participation in the transfer process. One of these commenters felt that the final rule should require that the PAE work with tenant and community groups and local governments to facilitate the transfer of properties to priority purchasers. Another commenter was concerned that the requirement for an ineligible owner to respond to a notice of rejection within 30 days with a notice of intent to sell would lead to HUD foreclosures when owners fail to respond within 30 days. In light of the adverse impact of foreclosure on tenants, the commenter wanted a final rule that requires community and tenant participation and places primary responsibility on the regulatory agencies to develop a proper solution using all available enforcement tools. Another commenter felt that HUD/PAEs should be obligated early in the disqualification process to explore transfer options with owners, tenants, and potential priority purchasers because reliance on end-stage notices by largely unmotivated owners would be neither adequate nor timely.

HUD response: The final rule requires extensive tenant participation in the involuntary sale or transfer process when the sale or transfer is to a priority purchaser. The potential priority purchaser must show evidence of tenant support and tenant endorsement prior to approval of the sale or transfer. If an owner is determined to be ineligible, HUD will make all efforts to prevent foreclosure and to facilitate sale or transfer of the project to an eligible owner. To the extent an owner is not responsive within the 30-day notice period, HUD's Office of Housing will make the determination of whether to terminate the section 8 contract or to renew at market rents. In all cases the impact on the tenants and local community will be carefully considered. These efforts will be coordinated with HUD's Enforcement Center and other offices within HUD. We agree with the commenter that it is vital for the PAE to determine if a transfer is appropriate (whether voluntary, or involuntary in the case of rejected owners) early in the process.

12. Tenant involvement for projects not restructured.

Eight commenters wanted the final rule to provide for tenant involvement in contract renewal decisions, including determinations of owner ineligibility, for projects not undergoing restructuring under the Mark-to-Market Program.

HUD response: Some of these comments concerned projects that were eligible for restructuring but with owners that requested a contract renewal without restructuring. As regards those projects, HUD agrees with this comment and has provided a new notice requirement and opportunity for comment in the new § 401.502. HUD's response regarding ineligible projects will be published with the final part 402.

13. Access to information.

Ten commenters thought that tenants and/or the community should have a right of access to relevant documents and information, before restructuring is final, in order to be able to give meaningful input to documents and the overall process. Documents/information mentioned included draft appraisals, physical condition analyses, rental assistance assessment plans, capital needs assessments, management reviews, comparable market rent analyses, proposed restructuring plan, data used in making any decisions about the need for project versus tenant-based assistance, cost-effectiveness of rehabilitations, or disqualification of the owner, and other information necessary for meaningful tenant input.

HUD response: Effective participation by tenants and the community depends on access to basic project information. This is recognized in MAHRA section 514(f)(1), which requires HUD to establish an opportunity for participation that must include ''appropriate access to relevant information about restructuring activities''. Many commenters felt that the interim rule was not adequately specific in emphasizing the right to such access. The interim rule generally requires the PAE to solicit tenant and local community comments at an early stage. By expressly designating the PAE as the key player under the interim rule, HUD expected that the PAE would make available in an appropriate manner the types of information that would make such a solicitation meaningful. The

interim rule did not attempt to list the specific types of documents or information that would need to be made available, or state precisely where and when they would be available, but instead focused on ensuring that a formal procedure was available to receive informed input from tenants and the community.

In response to a broadly-felt desire for an explicit statement in the final rule regarding access to information, the final rule includes both a general statement of the PAE's responsibilities in this regard and a specific listing of certain types of information that a PAE otherwise might be reluctant to disclose publicly because of potential owner assertions of proprietary or confidentiality rights to such information. By clearly listing such information in a rule, HUD will make clearer HUD's understanding that compliance with the statutory mandate for tenant and community participation necessarily means that an owner requesting restructuring must give up some rights to confidentiality that would ordinarily prevail.

We are not listing in the final rule all information items for which a PAE is expected to, or may find it appropriate to, provide public access. For example, business information of a type routinely submitted to HUD that would be released in response to a proper information request under the Freedom of Information Act is not listed. We are not listing items that are a matter of public record. We will not expect a PAE to make public information obtained from an owner that is clearly confidential, or propriety business information of a type that HUD would normally decline to make available, in the absence of a specific rule requiring disclosure. OMHAR is considering a separate proposed rulemaking procedure that will cover in more detail the issue of public access to owner-provided information in the context of Restructuring Plan development, and OMHAR welcomes all ideas on that subject.

P. Sections 401.550–.554, Implementation of the Restructuring Plan After Closing

Summary of Sections

Section 401.550 implements section 519 of MAHRA by providing for periodic PAE monitoring (including on-site inspections) and by generally requiring PAEs to ensure that owners comply with approved Restructuring Plans, including execution and recording of a Use Agreement. As long as there is a PAE for the project that is qualified to be a section 8 administrator (*i.e.,* a State or local housing agency), the PAE will be responsible for monitoring and enforcement; if not, HUD will perform those functions. HUD or its designee will be responsible for servicing the second mortgage including the determination of the amount of the net cash flow receivable by the owner. HUD may designate the PAE as servicer with consent of the PAE. Section 401.554 requires HUD to offer to any PAE qualified to be the section 8 contract administrator the opportunity to serve as contract administrator. The term ''qualified'' is intended to indicate that a contract administrator must meet both statutory requirements of the United States Housing Act of 1937 (*e.g.,* be a public housing agency) and any additional requirements of HUD established under the applicable section 8 program by the responsible HUD officials. As contract administrator, the PAE must offer to renew section 8 contracts in accordance with the Restructuring Plan as provided in section 515(a) of MAHRA.

Summary of Comments

1. Inspections.

Two commenters were concerned about inspections required under § 401.550(b). One commenter pointed out that properties subject to FHA-insured mortgages would be subject to two inspections, contrary to the HUD 2020 goal of requiring one inspection per property per year. Both commenters were concerned about the cost of the required inspection and the possibility that the loan servicing fee would not cover the servicing lender's costs. One suggested eliminating the mortgagee inspection requirement for small loans; the other suggested requiring the PAE to submit inspection results to the servicing lender in lieu of a mortgagee inspection.

HUD response: HUD agrees that duplicate inspections are not desirable and they are not required under the final rule. All inspection requirements for restructured projects will be consistent with the HUD Real Estate Assessment Center (REAC) protocols.

2. PAE matters.

One commenter recommended that PAEs receive additional compensation for conducting loan servicing, compliance monitoring, and section 8 contract administration. This commenter also recommended that HUD clarify all the long-term responsibilities of the PAE in the Operating Procedures Guide and the final rule. Another commenter suggested that HUD/PAE should identify the specific type of monitoring and inspection contemplated.

HUD response: The PAE's long-term responsibilities will vary according to its willingness and ability to perform these functions. The possible responsibilities are discussed in Subpart D. These matters, and appropriate compensation, will be addressed in the PRA and the Operating Procedures Guide. OMHAR is currently drafting a PRA amendment to recognize the long-term compliance monitoring functions.

3. Role of lender.

One commenter felt that if the first mortgage is refinanced with a conventional loan, then the conventional lender should have primary project monitoring and inspection authority.

HUD response: Consistent with section 519 of MAHRA, the PAE (or HUD if the project is no longer covered by a PRA with a public PAE) is responsible under the final rule for long-term monitoring and compliance with the Restructuring Plan and Use Agreement. This does not prevent the lender—whether the first mortgage is modified or refinanced with FHA-insured or conventional financing—from undertaking other monitoring or inspections that it considers appropriate, at its own expense.

4. Servicing of second mortgage.

Two commenters were concerned about the servicing of second mortgages. One of these commenters felt that the Mark-to-Market program would operate more efficiently if a servicer of a first mortgage were given the opportunity to service the second mortgage. The other commenter argued that because Mark-to-Market second mortgages will be cash flow mortgages, an important criteria for servicing them will be financial statement analysis. The commenter recommended that HUD test interest for a national solicitation for contractors who could provide the necessary expertise in analyzing financial statements.

HUD response: HUD agrees that the servicer of the second mortgage must have skill in financial statement analysis. As noted in § 401.552 of the final rule, HUD or its designee (which could include either the PAE or another contracted entity) will service the second mortgages.

5. Section 8 contract administration.

A commenter urged HUD not to attempt to undermine Congress' intent that qualified HFAs, serving as PAEs, be utilized as contract administrators for properties that complete restructuring. The commenter was concerned about the interim rule adding additional requirements for contract administrators

beyond those contained in the United States Housing Act of 1937.

HUD response: Section 401.554 implements the requirement in Section 519 of MAHRA that PAEs who are qualified to be Section 8 contract administrators be offered the opportunity to serve in this capacity. ''Qualified'' is used in the sense of both technically eligibile under the 1937 Act, and capable as determined by the responsible HUD official. HUD, or a public body PAE designated as contract administrator, must offer to renew section 8 contracts, subject to the availability of appropriations.

6. Enforcement.

A commenter asked: What will be the enforcement mechanism to enforce compliance with management standards?

HUD response: Under section 519(a)(1)(A) of MAHRA, a PAE has responsibility for enforcement of the management standards (as well as other MAHRA requirements). HUD will not shun an enforcement role, however, but will be actively involved in ensuring full compliance with program requirements. HUD and/or the PAE will apply a variety of enforcement tools in cooperation with HUD's Enforcement Center, when appropriate on a case-by-case basis. Notes, mortgages, Regulatory Agreements, Use Agreements and section 8 HAP contracts will all provide legally binding requirements upon which HUD or (to some extent) a PAE can bring enforcement action. Specific circumstances such as status of the property's financing, type and level of section 8 assistance and past PAE experiences with enforcement under Mark-to-Market and other programs will dictate the appropriate enforcement mechanism. Additionally, in every case, the recorded Use Agreement will provide recourse for the various beneficiaries.

Q. Section 401.595, Contract Provisions

Summary of Section

This section provides that the provisions of 24 CFR chapter VIII (*i.e.,* other section 8 program requirements) will apply to contracts renewed under part 401 only to the extent, if any, provided in the section 8 contract.

Summary of Comments

One commenter wanted an explanation of the section which the commenter thought was unclear. The commenter asked whether the rule referred only to regulations not required by section 8 itself, and whether HUD intended the contract to substitute for regulations governing management and operations of projects under renewed project-based assistance contracts.

HUD response: The intent of this section is to permit HUD to identify, through the contract, those section 8 regulations that are appropriately applied when renewal is under the authority of part 401. This applies only to the initial renewal under part 401. Subsequent renewals will be governed by part 402. Some matters (*e.g.,* setting initial rent levels for project-based assistance and adjusting them) are fully covered in part 401 and other section 8 regulations directly pertaining to these matters will not be applied to part 401 renewals. For some other matters, other sections of part 401 indicate the applicability of usual section 8 requirements—*e.g.,* § 401.558 indicates when the physical conditions standards in 24 CFR 5.703 (which usually apply to section 8 projects pursuant to sections such as 24 CFR 880.201 and 881.201) will apply to Mark-to-Market properties. In general, section 8 regulations on matters that are not in conflict with, or otherwise addressed by, part 401 will be made applicable in contracts renewed under that part. However, HUD considers it necessary to reserve to the contract drafting and revision process the final detailed decisions on the applicability of section 8 requirements.

R. Section 401.601 of Interim Rule and § 402.4(a)(2) of Final Rule, Consideration of an Owner's Request To Renew an Expiring Contract Without a Restructuring Plan

Summary of Section

This section provides a procedure for considering an eligible owner's request for renewal of an expiring contract without requesting a Restructuring Plan. Rents would be reduced to comparable market rents. HUD or the PAE will determine whether renewal under § 402.4 at comparable market rents would be sufficient to maintain an adequate debt service coverage ratio on the first mortgage and necessary project reserves. If so, the contract renewal will be processed under § 402.4. If not, a Restructuring Plan must be developed by a PAE before further consideration of the owner's request.

In the final rule, this section is moved without substantive change to § 402.4(a)(2), so that part 402 will contain all requirements for contract renewals under the authority of section 524 of MAHRA. When the complete part 402 is published in final form, HUD will make any further changes to § 402.4(a)(2) that are needed to reflect HUD's final resolution of the comments on this section. All of the HUD responses below relate to HUD's position pending publication of the complete final part 402.

Summary of Comments

1. Determination/verification of rent comparability.

One commenter wanted the final rule to clarify that verification of rent comparison is a responsibility of a PAE and not HUD but another said verification must be by HUD and not the PAE (arguing that a PAE has a bias to restructure). Another commenter wanted market comparable rents for projects with current rents above market to be determined by an appraiser on both an ''as-is'' and ''as-repaired'' basis, with ''as-is'' basis to be used when reserves are determined to be inadequate for repairs.

HUD response: HUD's Office of Housing will retain responsibility for renewal of below-market contracts. OMHAR will delegate the rent comparability review for above-market projects to PAEs, but will retain responsibility for the final decision. The compensation structure and assignment of these projects to PAEs for contact administration regardless of whether or not the projects are restructured will remove the basis for any perceived bias on the part of the PAE. The rents for these projects will be analyzed on an ''as is'' basis, unless the repairs will be accomplished through full restructuring with a rehabilitation escrow fully funded at closing, or as otherwise specified in the Operating Procedures Guide.

2. Determining adequacy of DSC at comparable market rents.

According to one commenter, this section should only provide for verification of the owner's determination of market rents with no underwriting (which would encourage owner opt-outs from project-based assistance contracts.) Two other commenters, however, asked for an independent HUD/PAE assessment of capital and project operating needs. Another commenter questioned the statutory basis for reviewing the adequacy of debt service coverage at comparable market rents.

HUD response: OMHAR will make a determination (on the basis of the PAE's review) that renewal with rents reduced to market rents with no debt restructuring will not jeopardize the long term financial and physical integrity of the property. Debt service coverage (at reduced rents with expected operating expenses), the adequacy of the reserves for replacement, and the physical condition

of the property will be analyzed prior to the Secretary's discretionary renewal pursuant to section 524(a).

S. Section 401.602, Tenant Protection if an Expiring Contract Is Not Renewed

Summary of Section

An owner of an eligible project is not required to request renewal of an expiring contract, but the owner must give advance notice of non-renewal as required by statute. (The underlying statutory provisions have changed since the interim rule took effect, as discussed in Section I.B. of this preamble.) In determining the application of the notice provisions of section 514(d) of MAHRA and section 8(c)(9) of the 1937 Act, as they existed when the interim rule took effect, § 401.602 of the interim rule distinguished between an owner of an eligible project who requested restructuring (considered subject to section 514(d) notice requirement) and an owner of an eligible project who did not request restructuring or who was rejected by HUD or the PAE (considered subject to the section 8(c)(9) notice requirement.) The interim rule also provided that an owner of an eligible project who does not give the proper notice must continue to permit tenants to stay in their units without increasing the tenant portion of the rent for a specified period beginning on the earlier of the date proper notice was given or the date the contract expires.

Section 401.602 of the interim rule also required HUD to make tenant-based assistance available to tenants in two circumstances: (1) To all tenants residing in units assisted under the expiring contract if the owner of an eligible project chooses not to extend or renew project-based assistance (as provided in section 514(d) of MAHRA) and (2) to all tenants residing in a project who are low-income families or are receiving tenant-based assistance at the time HUD or the PAE reject an owner of an eligible project for restructuring (as provided in section 516(d) of MAHRA). Section 401.606 of the interim rule required tenant-based assistance to be offered to each assisted family residing in a project at the time it is restructured with a conversion to tenant-based assistance. The interim rule did not address the availability of tenant-based assistance in other situations of non-renewal of project-based assistance.

Summary of Comments

1. Is tenant-based assistance discretionary or mandatory if project-based assistance is not renewed?

One commenter asked HUD to make clear in the rule that HUD expects appropriations for tenant-based assistance to protect displaced.

HUD response: Owners are required to provide adequate notice to tenants and HUD if they intend to discontinue the provision of project-based assistance, so that tenant-based assistance will be available for the tenants when the project-based assistance expires. As recently amended by section 535 of Pub. L. 106–74, section 8(o)(8)(A) of the United States Housing Act of 1937 requires the owner's notice to state that ''in the event of termination [of project-based assistance] the Department of Housing and Urban Development will provide tenant-based assistance to all eligible residents, enabling them to choose the place they wish to rent, which is likely to include the dwelling unit in which they currently reside.''

2. Notice issues.

a. 6-month notice of non-renewal. Some comments on notice to tenants addressed the interim rule provisions providing for 6-month notice in some cases and 12-month notice in others, based on HUD's interpretation of statutory provisions in effect when the interim rule was published. Subsequent legislation has changed the 6-month notice provision to a 12-month notice.

HUD response: HUD has made changes in the final rule corresponding to statutory changes and therefore comments on the 6-month notice provision are no longer germane.

b. When is notice required? Three commenters said that a failure to renew because HUD found the owner ineligible for contract renewal should not require a notice to tenants. Similarly, one commenter felt notice was not required if an owner refuses to accept a restructuring plan approved by HUD. Two others wanted tenant notice in all opt-out or non-renewal situations, including owner ineligibility and conversion to tenant-based assistance under a restructuring plan. One commenter felt that any notice requirement in connection with an ''interim'' contract renewal at existing rents under section 514(c) pending restructuring should be satisfied by notice given when the contract is approved.

HUD response: One-year notice is now required by statute regardless of the reason for termination of the contract. Additionally, new § 401.602(a)(1)(ii) of the final rule reflects the new statutory requirement (section 549(c) of Departments of Veterans Affairs and Housing and Urban Development, and Independent Agencies Appropriations Act, 1999) that owners of projects eligible for Mark-to-Market restructuring must also give a 120 day notice of their intent to opt out.

3. Rent levels for tenant-based assistance.

One commenter questioned the lack of guidance on rent levels for enhanced vouchers for opt-outs. Two commenters said the rule should guarantee that the vouchers provided through a Restructuring Plan are ''enhanced'' or ''sticky'', and another commenter wanted the final rule to clarify whether such vouchers are enhanced. Two commenters also wanted vouchers to be enhanced whenever an owner is rejected for renewal and where an owner opts out. One commenter cited section 405(a) of the Balanced Budget Downpayment Act, I and language in appropriations Act as authority for permitting rents under some tenant-based assistance that exceed the levels of ''enhanced'' vouchers under section 515(c)(4), and relocation costs.

HUD response: Section 538 of Pub. L. 106–74 now provides uniform guidance for enhanced vouchers. It is reflected in this final rule.

4. Timing of tenant-based assistance.

Two commenters said that tenant-based assistance should be available sufficiently early prior to termination/expiration so that tenants can relocate or have assistance in place in time; one suggested 4 months. Another commenter wanted HUD to provide a short-term extension of project-based assistance to provide necessary time for tenants to prepare when an owner is rejected only a short time before the project-based assistance expires.

HUD response: These comments are generally consistent with existing HUD policy to provide adequate time for tenants to find alternative housing.

T. Section 401.606, Tenant-Based Assistance Provisions for Displaced Tenants

Summary of Section

Section 401.606 complies with section 515(c) of MAHRA by providing that, if the Restructuring Plan provides for tenant-based assistance, assistance under 24 CFR part 982 will be offered to each eligible family assisted under the section 8 project-based assistance contract on the date of expiration.

Summary of Comments

One commenter said the rule should provide that ''reasonable rent'' for section 515(c)(4) vouchers is the restructured rent in the Restructuring Plan which must be pegged to actual market rents, and that the payment

standard for the vouchers must continue to be the ''reasonable rent'' for all renewals of tenant-based assistance as long as the tenant stays in the project. Three other commenters said that since section 515(c)(4) of MAHRA is merely referenced in the interim rule, § 401.606 should expressly state that the ''reasonable rent'' shall be at comparable market rents (instead of merely not exceeding market, as stated in the statute).

HUD response: Section 538 of Pub. L. 106–74 revised the vouchers provisions of MAHRA to provide for enhanced vouchers on the same terms as enhanced vouchers authorized by other statutes. The final rule reflects this statutory change.

U. Sections 401.645 and 401.651 Owner Dispute of Rejection and Administrative Appeals

Summary of Sections

Section 401.645 provides the owner an opportunity to dispute if any of the following occur: (1) A request for a Restructuring Plan is rejected; (2) a request for a section 8 contract renewal is rejected; (3) a PAE cannot continue with a Restructuring Plan because of lack of owner cooperation under § 401.402; or (4) HUD rejects a proposed Restructuring Commitment submitted by a PAE. HUD or the PAE will notify the owner of the reasons for a rejection and provide a 30-day period to submit written objections or cure the problem. If an objection is submitted, HUD or the PAE will send the owner a final decision affirming, modifying, or reversing the initial rejection with reasons for the decision. This final decision may be appealed within 10 days through the procedures in § 401.651, which permit an owner to make a presentation (written, oral, and/or through a representative) at a conference with an official of HUD who was not involved in making the decision under appeal. The HUD or PAE official who issued the decision under appeal may also participate.

Summary of Comments

1. Tenant appeals.

Three commenters felt that the dispute and appeals procedures should be extended to tenants.

HUD response: Tenant input into administrative procedures will be welcomed whenever appropriate. Information that may give rise to the administrative proceedings referenced above will always be welcomed from all interested parties. While tenant and local community input is critical to the success of specific Restructuring Plans and to the program in general, the statute does not contemplate tenant access to the dispute and appeals procedures.

2. PAE appeals of rejections under § 401.405.

One commenter suggested that PAEs should have the right to object to HUD's rejection of a restructuring plan, given that PAEs have statutory responsibility for developing the plan. In addition, the commenter suggested that because objection and appeal by a PAE is not encompassed by section 516(b) of MAHRA, HUD is without authority to extend a final determination on the PAE's objection that is exempt from judicial review under MAHRA section 516(c).

HUD response: There is no statutory requirement to provide the PRA with a specific administrative dispute and appeal right independent of the owner, nor is the PAE likely to have any standing to pursue a judicial challenge (for which the final rule's dispute and appeals right serves as a substitute in the case of an owner). HUD feels that the legal interests that should be protected by guaranteed access to a specific administrative dispute/appeal procedure are those of the project owner who may end up in mortgage default if the mortgage is not restructured and future section 8 project-based assistance is decreased or denied. This is in keeping with MAHRA.

HUD will, of course, be open to further discussion with a PAE if a PAE is convinced that rejection of a particular proposed Restructuring Plan is not in the best interests of the project or the public, and that the Plan cannot be modified to respond to HUD's objections. The Operating Procedures Guide provides a 10-day PAE comment period for this purpose, but HUD reserves the right to modify or dispense with this procedure in the future without rulemaking.

3. Time for owner to dispute approved plan.

One commenter said that an owner needs more than 10 days to decide how to respond to an approved Restructuring Plan under § 401.405, and suggested 30 days.

HUD response: Owners will receive a draft of the Restructuring Plan at least 10 days before the Plan is given to HUD for review and will have the Plan to review throughout HUD's review period. Accordingly, the additional 10-day period for owners to review the Plan after HUD approval provides ample time for thorough owner review.

4. Owner appeals.

One commenter felt that the administrative appeals procedure in the interim rule was ''sorely'' lacking in due process and said that it was unreasonable to limit review of adverse decisions to an informal review, given the possible severe economic consequences of such decisions. The commenter suggested using HUD's established procedures for dealing with administrative appeals. The other commenter suggested requiring that the official conducting the appeal should be knowledgeable about the Mark-to-Market program. This commenter also suggested that the official conducting the appeal should not be involved in any adverse action with the affected owner, in order to avoid a conflict of interest.

HUD response: The appeals procedure strikes a balance between the need for expeditious resolution of cases and the need to provide substantial notice and opportunity to be heard. The procedures detailed in the final rule provide adequate protection for owners. The final rule requires notice and an opportunity to be heard, and an appeal right in the event of an unfavorable decision. All cases will be handled carefully by knowledgeable and responsible OMHAR officials.

V. Section 401.600, Will a Section 8 Contract Be Extended if It Would Expire While an Owner's Request for a Restructuring Plan Is Pending?

Summary of Section

Under § 401.600, an owner who has requested development of a Restructuring Plan may receive a section 8 contract extension at current rents for the shortest reasonable period needed for the PAE to complete a Restructuring Plan for the project. Any extension of the contract beyond 1 year pending closing on the Restructuring Plan would be at comparable market rents or exception rents.

Summary of Comments

One commenter said that a delay in restructuring due to reasons outside the control of an owner should not lead to rent reduction. Another warned about the need to be sensitive to tenant displacement difficulties, saying that HUD should extend or renew a contract during any administrative appeal period for a determination of ineligibility and for long enough for vouchers to be issued.

HUD response: Delays in the restructuring process (unless clearly the result of a lack of cooperation by the owner) will not lead to a rent reduction prior to 12 months. Regardless of the cause of delay, the rents will in every case be reduced after 12 months, though

the project will remain eligible to continue with the restructuring. (OMHAR will consider a waiver if assignment of a project to a PAE was delayed through no fault of the owner.) We note that the restructuring process will begin at least 90 days prior to the original expiration and we urge owners concerned about this issue to exercise their option of entering the program early. HUD is sensitive to tenant displacement issues and will provide tenant vouchers in a timely manner.

W. Miscellaneous Comments on Part 401

The following miscellaneous comments on part 401 were made by at least one commenter:

1. When do contract rents need to be adjusted under a Restructuring Plan when an owner applies in advance of the contact expiration date?

HUD response: The contract rents would be adjusted upon restructuring.

2. Can Mark-to-Market restructuring use a structure from the Portfolio Reengineering demonstration programs under which short-term tax-exempt bonds were amortized through ''excess'' section 8 rents prior to expiration of existing contract?

HUD response: This will be addressed in a revision to the Operating Procedures Guide. The structure is likely to be acceptable for cases in which the expiration date is after the termination date of the Mark-to-Market Program.

3. Any ''guidance'' that may lead to ineligibility if not followed should be in the rule—and to the extent matters are not included in the rule, HUD must acknowledge that guidance is non-binding.

HUD response: The Operating Procedures Guide will be used as a vehicle for explaining and elaborating upon the detailed application of substantive requirements in the final rule, as well as addressing procedural and organizational matters that are not required to be included in regulations. The Guide will not be a means of introducing new substantive requirements that are properly the subject of a regulation.

4. HUD must give priority to affordable housing built in suburbs that expands fair housing choice.

HUD response: The PAEs are responsible for balancing the competing social and financial objectives in the Restructuring Plan for each of the projects assigned in their respective PRAs, regardless of location.

5. HUD needs to repeat more of MAHRA's language instead of cross-referencing (one commenter specifically mentioned § 401.420, while three mentioned § 401.421(b)).

HUD response: As part of our continuing effort to streamline rules, HUD's general approach to drafting rules now concentrates on the additional policy guidance needed to fill the gaps in matters expressly covered by statutory language, while minimizing repetition of statutory language that is already clear and that is not amplified in a rule. In response to these concerns of commenters, however, we carefully reviewed the places where the interim rule referenced statutory language to reconsider whether there would any benefit of added clarity or readability that would outweigh the disadvantage of more language added to an already long and complex rule. As a result of this review, we have added more of the statutory language in §§ 401.411(b), 401.420(a) and 401.421(b).

6. Lenders should be compensated for restructuring expenses and time and should be considered compensable third parties under section 517(b)(5) of MAHRA.

HUD response: Lenders may charge the owners reasonable fees for agreeing to modify existing first mortgages. Reasonable and customary loan origination fees may be recognized to the extent they are supported in the amount of a new refinancing loan (as opposed to a modificiation of the existing first mortgage).

7. The Paperwork Reduction Act burden-hour estimates are low.

HUD response: We have reconsidered these estimates and have revised them accordingly. We will pursue approval of our revised estimates through established procedures.

8. FHA's allowable servicing fees should be raised because the size of first mortgage will go down through restructuring.

HUD response: FHA servicing fees are not governed by this final rule.

III. Changes Made to Part 401 of Interim Rule

References are to the section number of the interim rule.

401.1 What Is the Purpose of Part 401?

We removed a sentence that stated that part 401 contains the regulations for the renewal of project-based assistance for eligible projects without restructuring under the Mark-to-Market Program, to recognize that § 401.601 (regarding the ''OMHAR Lite'' procedure) has been redesignated as § 402.4(a)(2).

401.2 What Special Definitions Apply to This Part?

- In the definition of eligible project, we added material from § 401.100 of the interim rule, which was titled ''Which projects are eligible for a Restructuring Plan under this part?'' This avoids duplication, and recognizes that the term ''eligible project'' is used in parts 401 and 402 in a manner that is intended to include the provisions that were in § 401.100 of the interim rule. Section 401.100 is removed in the final rule. We also added that an eligible project must have a first mortgage that has not been restructured under part 401 or under a demonstration program to reflect our understanding of statutory intent.

Some projects under demonstration programs received restructuring of rents to budget-based levels without debt restructuring. Under HUD's interpretation of MAHRA as originlly enacted, all such projects were eligible for Mark-to-Market restructuring, while projects with debt restructured under the demonstration programs were exeption projects. Section 531(b) of Pub. L. 106–74 amended MAHRA to exclude from eligible projects all demonstration projects for which HUD ''determines that rent restructuring is inappropriate''. No change to the rule language is needed to accomplish this result, since the language as drafted automatically picks up the relevant statutory change. (The same is true of preservation projects described in section 531(b)). Similarly, section 531(c) of the new law has the effect under current rule language of automatically including some State-financed projects (those with FHA insurance and an absence of conflict between debt restructuring and applicable State law or financing agreements) as intended by Congress.

- In the definition of priority purchaser, we clarified that a general partnership with a sole general partner that itself is a priority purchaser will be regarded as a priority purchaser.
- We added a definition of OMHAR.
- We defined voucher to mean any tenant-based assistance (as defined in section 8(f) of the United States Housing Act of 1937; see section 512(15) of MAHRA)). This definition was added to make clear that use of the term voucher in the final rule, in contexts where the interim rule referred to vouchers and certificates, is a non-substantive change that reflects the statutory merger of the section 8 voucher and certificate programs.
- We added a new paragraph (d) referencing other definitions in the

conflict of interest sections of the final rule.

401.3 Who May Waive Provisions in This Part?

This section, not in the interim rule, clarifies that waivers of part 401 are made by the Director of OMHAR subject to the HUD regulations implementing section 106 of the HUD Reform Act of 1989. Ordinarily the Secretary delegates both the authority to waive and issue rules to the Assistant Secretary or equivalent responsible for administering a program. Because the OMHAR Director's authority to issue part 401 derives directly from statute, rather than from authority delegated by the Secretary, this section is advisable to clarify that the OMHAR Director's statutory authority to issue rules encompasses the power to waive them. The section implements an interpretation that OMHAR rules are ''regulations of the Department'' within the meaning of section 106, so that a waiver must be in writing, state the grounds for the waiver, and be included in the Secretary's periodic **Federal Register** notice of waivers.

401.99 How Does an Owner Request a Section 8 Contract Renewal? [Revised Title]

We removed the interim provision that permitted an owner to submit a request for contract renewal less than 90 days before the contract expiration date if that date was before January 13, 1999. That provision is no longer needed. We added language recognizing that an owner eligible to request renewal under § 402.5 may instead request renewal under § 402.4. We removed language that duplicated § 402.6 for owners of eligible projects seeking renewal without a Restructuring Plan, and substituted a cross-reference to § 402.6. We removed a reference to affiliates due to a change to § 401.101.

Finally, the final rule requires the owner to certify that neither it nor an affiliate has received notice from HUD of a pending suspension, debarment or other enforcement action (unless voluntary sale or transfer is proposed). If the owner is unable to make this certification but does not consider that the subject of the pending suspension or debarment action is grounds for rejection under the standards of section 516 of MAHRA, the owner should submit the rest of the certification with an explanation of the disagreement. HUD will consider this explanation when determining whether to exercise its discretion to reject a request under § 401.101 (revised as discussed below). The final rule thus does not require HUD to accept a request for restructuring if HUD expects to immediately reject the application under § 401.403 based on information about the owner or an affiliate that HUD has already developed. In many cases it will be more efficient to address a problem with an owner or affiliate at the earliest possible stage, so that other approaches (such as project sale) can be explored promptly. Later rejection under § 401.403 could still be possible if review under § 401.101 does not lead to immediate rejection. Owners have the same appeal and dispute rights whether rejection is under § 401.101 or § 401.403 and thus are not adversely affected by this refinement in the final rule.

401.100 Which Projects Are Eligible for a Restructuring Plan Under this Part?

We removed this section and combined it with the definition of ''eligible project'' in § 401.2(c).

401.101 Which Owners Are Ineligible To Request a Restructuring Plan? [Revised Title]

As explained above, if there is a pending HUD enforcement action against the owner or an affiliate that is based on an action that is grounds for rejection under section 516 of MAHRA, HUD may decide initially not to accept a request for restructuring instead of waiting to reject the request under § 401.403. We added a sentence to § 401.101 to clarify this point. We also revised this section so that rejection of an owner is no longer always required when an affiliate of the owner, but not the owner itself, has already been debarred or suspended. Rejection in that situation will be discretionary with HUD, based on a consideration of the specific facts and circumstances. We made the same change to section 401.403.

401.200 Who May Be a PAE?

Although we have retained the requirement that each non-public PAE must form a partnership with a public purpose entity, as required by section 513(b)(7)(A) of MAHRA, we have omitted the requirement that such a partnership meet all legal requirements for a partnership. This will provide some flexibility to accommodate legal limitations that may restrict some public purpose entities from entering into an arrangement that qualifies as a partnership under applicable State law, if the arrangement otherwise meets the purposes of this requirement of MAHRA. HUD will assist individual non-public PAEs as needed in determining whether their proposed partnership arrangement meets the requirements of MAHRA and this section of the final rule.

401.300 What Is a PRA?

New language recognizes that a PRA may incorporate by reference certain required matters that are adequately addressed in other documents.

401.301 Partnership Arrangements [Revised Title]

The revised title describes the subject of this section more precisely.

401.304 PRA Provisions on PAE Compensation

In the preamble to the interim rule, HUD stated its intention to include more specific provisions on PAE compensation in the final rule, after negotiating arrangements for the initial PAEs and refining the precise duties of PAEs in the initial PRA development process. The final rule contains some additions to § 401.304 based on experience to date. Regarding base fees, HUD will use an annual survey of the market price for the work to determine compensation for public PAEs, and a competitive bid process to determine fees for private PAEs. HUD will set a uniform per-project base fee for each public PAE. The individual components of incentive packages may vary, but the total per-project incentive payment will be uniform for all PAEs, whether public or private. HUD will establish annual limits for reimbursement of expenses for each project, with the possibility of waivers for high-cost areas. The Director of OMHAR must approve all fee schedules. OMHAR's Internet website will contain the standard form of PRA and compensation package, with annual updating.

401.307 On-Going Responsibility of PAE

We have deleted this section because it did not add any specific substantive requirement. This subject is addressed in an expanded subpart D in the final rule.

401.309 PRA Term and Termination Provisions; Other Remedies

We have added an express provision for termination of the PRA for the convenience of the Federal Government similar to the standard arrangement used when the Federal Government contracts for procurement of services. Although the PRA is not a procurement contract, the underlying need of the Federal Government for a termination for convenience provision is also present for a PRA. The termination for convenience provision was generally authorized by § 401.300 of the interim

rule that provided for a PRA to contain ''other terms and conditions required by HUD'' but HUD is choosing to address the matter expressly in the final rule.

401.310 Conflicts of Interest

We narrowed the provision in paragraph (a)(1)(i) on PAE financial interests to focus more precisely on likely areas of conflict. We added language to paragraph (d)(1)(ii) to clarify that a potential PAE that notifies HUD, after a request for selection but before selection, of a conflict of interest must provide a detailed description of the conflict.

401.312 Confidentiality of Information

We added language recognizing that the tenant/community participation procedures in §§ 401.500 through 401.503 of the final rule require some exceptions to the PAE's general obligation to safeguard confidential project and owner information.

401.313 Consequences of PAE Violations; Finality of HUD Determination

We have simplified the language regarding liability of PAEs to HUD for damages resulting from violations of the rules on conflicts of interest, standards of conduct and confidentiality of information. We made several minor editorial changes.

401.314 Environmental Review Responsibilities

The interim rule requires HUD to complete any required environmental review under 24 CFR part 50 before HUD executes a Restructuring Commitment. The final rule clarifies that HUD will complete all actions required for compliance with part 50 (including consideration of any environmental review and consideration of rejection or modification based on any adverse environmental impacts) before HUD executes a Restructuring Commitment.

401.402 Cooperation With Owner and Qualified Mortgagee in Restructuring Plan Development

We added language to clarify that owner cooperation will be demonstrated by reasonable progress in development of a Restructuring Plan.

401.403 Rejection of a Request for a Restructuring Plan Because of Actions or Omissions of Owner or Affiliate or Project Condition

We added language to clarify that HUD and the PAE will refuse to consider restructuring when the current owner is ineligible, because of debarment or suspension or for other reasons that result in a discretionary determination of ineligibility, unless the owner proposes to sell or transfer the property to an eligible purchaser. Also, we added language clarifying that rejection under section 516(a)(4) of MAHRA and this section due to poor condition of the project may be under § 401.451(c) or otherwise. Section 401.451(c) provides an early formal step, upon completion of the Physical Condition Analysis for the project, at which the PAE must consider whether continuing with rehabilitation through a Restructuring Plan will be a cost-effective means of ensuring affordable housing for the tenants. HUD and the PAE will continue to have the right to reject a project in poor condition even if it is not rejected at this early stage. For example, tenant and community input might lead HUD or the PAE to consider the matter further. Finally, we made a change regarding rejection based on suspension or debarment of an affiliate of the owner that is explained in the discussion above under section 401.101, where the same change was made.

401.404 Proposed Restructuring Commitment

The final rule adds a reference to the public meeting required by § 401.500(c) of the final rule. That meeting must be held at least 10 days before the Restructuring Plan and proposed Restructuring Commitment are submitted to HUD under this section. We also specify in the final rule that the Restructuring Commitment must state all consideration that the PAE or related parties receives other than from HUD, in order to identify for OMHAR an area of potential bias or conflict of interest.

401.405 Restructuring Commitment Review and Approval by HUD

New language in the final rule makes it clear that a PAE must inform the owner when HUD rejects a Restructuring Commitment proposed by the PRA, so that the owner can decide whether to dispute the rejection under the subpart F procedures.

401.408 Affordability and Use Restrictions Required

Under new paragraph (e) of the final rule, the recorded Use Agreement must require that the owner comply with § 401.556 of the final rule (§ 401.483 of the interim rule) regarding nondiscrimination against voucher holders in leasing. Under new paragraph (f) of the final rule, the Use Agreement must contain remedies for a breach of the Use Agreement. The remedies must include monetary damages for non-compliance with the affordability restrictions or the physical condition standards in § 401.558 of the final rule. Under new paragraph (g) of the final rule, the Use Agreement must contain a requirement for maintaining the property in compliance with the physical condition standards.

We made a technical change to paragraph (a) to reflect the movement of paragraph (e) of the interim rule (now paragraph (k) of the final rule) and the addition of new paragraphs. These changes clarify that an owner's obligation to renew project-based assistance is not a matter for the recorded Use Agreement, but derives directly from MAHRA and this rule and will be implemented by a rider to the section 8 HAP contract. In what is now paragraph (i), we clarified that the listed interested parties will have rights to enforce the Use Agreement (subject to modification as previously discussed) with the possibility that a particular Use Agreement could specify additional enforcing parties, and added a requirement for the enforcing party to give the owner notice and a reasonable opportunity to cure any violations. In what is now paragraph (j), the final rule requires the owner to post on project property notice of any modifications to the Use Agreement approved by HUD. In what is now paragraph (k), we removed a reference to owner acceptance of tenant-based assistance because it was inaccurate. (Note that new § 401.554 accurately describes the availability of tenant-based assistance required by a Restructuring Plan, consistent with section 515(a)(2) of MAHRA.)

401.410 Standards for Determining Comparable Market Rents

In paragraph (a)(1), we clarified that the MAHRA comparable market rent standard only applies to project-based assistance. Any tenant-based assistance provided under a Restructuring Plan will be subject to the similar ''rent reasonableness'' standard of section 8(o)(10)(A) of the United State Housing Act of 1937, which applies both to enhanced and regular vouchers. We clarified that section 202/811 projects are not comparable properties for purposes of determining market comparable rents.

We added general language permitting the PAE to make appropriate adjustments when needed to ensure comparison of comparable through comparison with comparable properties. Examples of appropriate adjustments would be adjustments needed due to the non-luxury standard for Mark-to-Market projects (as discussed in the interim rule

preamble) and adjustments needed for utility allowances or to reflect the value of any non-section 8 subsidy provided to the project with the expiring section 8 contract (as mentioned in new section 524(a)(5) of MAHRA). This section is also incorporated into part 402 and applied to projects that are not undergoing debt restructuring. For such projects, the references to the PAE should be treated as references to HUD.

401.411 Guidelines for Determining Exception Rents

We have included some statutory text that was cross-referenced in the interim rule, clarified that exception rents only apply to project-based assistance.

401.412 Adjustment of Rents With Operating Cost Adjustment Factor (OCAF)

We clarified that under this rule OCAF applies only to project-based assistance. We removed the reference to negative OCAF. We redesignated paragraphs (a) and (b) of the interim rule as paragraphs (a)(1) and (a)(2) and added a new paragraph (b) explaining the availability of budget-based adjustments upon request of the owner, subject to the approval of the Secretary, as provided in Pub. L. 106–74.

401.420 When Must the Restructuring Plan Require Project-Based Assistance?

We have included some statutory text that was cross-referenced in the interim rule.

401.421 Rental Assistance Assessment Plan

We have included some statutory text that was cross-referenced in the interim rule.

401.450 Owner Evaluation of Physical Condition

In paragraph (a)(1), we clarified that the owner's list of work items needed to bring the project to the property standard for rehabilitation that is stated in the rule and MAHRA (non-luxury standard adequate for the rental market for which the project was originally approved) should include any work items needed to ensure compliance with applicable requirements of 24 CFR part 8 concerning accessibility to persons with disabilities. The interim and final rules permit rehabilitation to include improvements to meet current standards if the non-luxury standard has changed over time. Accessibility measures are an example of how standards have evolved since original project approval. The addition to paragraph (a)(1) is consistent with § 401.452, which makes it clear that there is no exemption from applicable part 8 requirements simply because rehabilitation is through the Mark-to-Market Program.

We added a new paragraph (b) permitting the owner to submit an up-to-date Comprehensive Needs Assessment (CA) in place of a new evaluation, if all requirements of paragraph (a) are met. Cans must be prepared following procedures outlined in HUD Notice H 97–02 or in subsequent administrative guidance from HUD.

401.451 PAE Physical Condition Analysis (PCA)

We have revised the heading of paragraph (c) to emphasize that it permits rejection of projects in such poor condition that restructuring with rehabilitation is not a cost-effective way of continuing to ensure affordable housing for tenants, as provided in section 516(a)(4) of MAHRA. We added language clarifying that a PAE can only recommend rejection, with HUD making the final decision.

401.452 Property Standards for Rehabilitation

We added an express requirement for the PAE to consider marketability when planning rehabilitation.

401.453 Reserves [New Title]

Because paragraph (a) of this section of the interim rule contains the standards that must be maintained while the Restructuring Plan is in effect, we moved it to subpart D (''Implementation of the Restructuring Plan After Closing''). It is § 401.558 in the final rule under a revised title. We revised the title of this section to reflect its narrowed scope in the final rule.

401.460 Modification or Refinancing of First Mortgage

We added language to paragraph (e) to require the owner to discuss mortgage modification with the existing first mortgagee before considering other sources of first mortgage financing under the Restructuring Plan. We also added language to paragraph (a) to clarify that the size of the first mortgage and monthly payments may not increase through mortgage modification but may increase through refinancing (*e.g.,* a refinancing mortgage that includes rehabilitation financing). Finally, the final rule acknowledges section 219 of Pub.L. 106–74, which gives priority to risk-sharing financing in a Restructuring Plan if it is the best available financing in terms of financial savings and will reduce the Federal Government's risk of loss.

401.461 HUD-Held Second Mortgage

We reorganized paragraph (a) and added language on the following points:

- To clarify that HUD may allow a PAE to negotiate an additional (*e.g.,* third) mortgage for less than the maximum amount permitted by the final rule. Additional guidance for PAEs is included in the Operating Procedures Guide.
- To clarify the owner's right to appeal acceleration of the second mortgage does not apply when acceleration is pursuant to grounds for acceleration that are specified in section 517(a)(4)(A) and (B) of MAHRA, since they do not involve the type of complex legal or factual questions for which an administrative appeals procedure may help to avoid unnecessary litigation. (The grounds are termination or payment in full of the first mortgage and unauthorized project sale/second mortgage assumption.)
- To clarify that, upon payment of the second mortgage in full, any additional (*i.e.,* third) mortgage under this section is not automatically accelerated but is then payable upon demand by HUD or as otherwise agreed by HUD (*e.g.,* under an approved payment schedule).
- To recognize circumstances under which the new HUD-held mortgage may be a first mortgage, in response to sec. 213 of Pub.L. 106–74.

401.472 Rehabilitation Funding

We have included in the final rule a requirement that appeared only in the preamble for the interim rule: That the owner contribution include a reasonable proportion of the rehabilitation cost from nongovernmental resources. HUD will provide additional guidance in the Operating Procedures Guide regarding standards for determining a ''reasonable proportion''.

HUD 401.473 HUD Grants for Rehabilitation Under Section 236(s) of NA

The final rule inserts language that was inadvertently omitted during printing of the interim rule. As printed, the interim rule permitted delegation of grant administration responsibility only if grant funding were available to pay for grant administration. Nothing in section 236(s)(5)(A) of the National Housing Act prevents a PAE from agreeing to accept delegation without reimbursement of costs. HUD did not intend to prevent it by regulation.

401.474 Project Accounts

We added language to paragraph (b) to clarify that it is the actual release of funds to the owner under this section that must be delayed until after

completion of rehabilitation, not the determination of the amount of funds to be released.

401.480 Sale or Transfer of Project [Revised Title]

We have removed ''voluntary'' from the title of this section because it was potentially misleading. Although all projects sales will be voluntary in the sense that owners must agree to them, some project sales may be considered involuntary in the sense that no Restructuring Plan will be approved under current project ownership. We have also revised the section to clarify that purchasers defined in the rule as ''priority purchasers'' do not have a right to priority consideration for involuntary sales indefinitely, but only for a reasonable period that OMHAR will determine. By definition, priority purchasers will have tenant support. The final rule clarifies that other purchasers will also be required to provide evidence of tenant support.

401.481 Subsidy Layering Limitations on HUD Funds

Additional language clarifies that the subsidy layering certification does not preclude a Restructuring Plan that includes project reconfiguration needed to meet the needs of the community.

401.483 Leasing Units to Voucher Holders

Because this section concerns leasing of units while the Restructuring Plan is in effect, we moved it to Subpart D (''Implementation of the Restructuring Plan After Closing''). It is § 401.556 in the final rule.

401.484 Property Management Standards

Because this section concerns property management standards while the Restructuring Plan is in effect, we also moved it to Subpart D. It is § 401.560 in the final rule.

401.500 Required Notices to Third Parties and Meetings With Third Parties [Revised Title]

In paragraph (b)(2) of the final rule, notice of the initial public meeting is now required no more than 40 days before the meeting, instead of 60 days as in the interim rule. New paragraphs (c) and (d) cover a new requirement for public notice and comment on a substantively completed Restructuring Plan before the PAE submits the Plan to OMHAR. A second public meeting is also now required by new paragraph (d).

New paragraph (f) (a revision of paragraph (c) of the interim rule) ensures that the PAE will document and provide to HUD all public comments on the proposed Restructuring Plan. Paragraph (f) clarifies that notice is required whenever the PAE determines that the Restructuring Plan will not move forward, for any reason, after the owner has requested that a Plan be developed or after a Plan is determined to be necessary under § 402.4(a)(2). The interim rule language was ambigous on whether notice was required in the absence of an OMHAR rejection. As revised, the final rule notice requirement also applies whenever an owner does not take the necessary actions to complete the restructuring process, including withdrawal of the request to restructure or failure to execute an approved Restructuring Commitment.

401.501 Delivery of Notices and Recipients of Notices [Revised Title]

The final rule requires notice to tenants and tenant organizations, directly and through posting, instead of permitting notice to a tenant organization alone to suffice as tenant notice as under the interim rule. Notice also must now be given to the ITAG and OTAG grantees serving the jurisdiction in which the property is located.

401.502 Notice Requirement When Debt Restructuring Will Not Occur

This new section provides that persons who would have received notice of a Restructuring Plan request under §§ 401.500–.501 will receive notice if the owner of an eligible project requests section 8 contract renewals without debt restructuring. HUD or the PAE must make publicly available basic project identified in § 401.500(b)(1)(i), (ii) and (iv), and the Owner Evaluation of Physical Condition and comparative market rent analysis that are required in connection with the renewal request (without expense or profit/loss information). The PAE must announce a procedure to accept public comments on this information. The PAE must consider the comments and document the consideration for HUD.

401.503 Access to Information

This new section explicitly recognizes that a PAE, in fulfilling its responsibilities to provide for tenant and community participating in developing a Restructuring Plan, will need to make available information about the project and the owner. In general, the PAE is not expected to make public confidential or proprietary information obtained from the owner. This section does require the PAE to make public the Owner Evaluation of Physical Condition and the owner-prepared 1-year project rent analysis (without expense or profit/loss information) even if the owner asserts confidentiality/proprietary rights. The PAE is never required to disclose expense, property valuation, or profit/loss information without owner consent.

401.550 Monitoring and Compliance Agreements

This section requires PAE inspections of projects that have undergone restructuring in accordance with section 519(b)(2) of MAHRA, subject to HUD's uniform inspections procedures in 24 CFR part 5, subpart G. To avoid duplicative inspections under such procedures (such as by the mortgagee if the mortgage continues to be insured, as provided in 24 CFR 207.260), the final rule adds a clarification that HUD will accept an inspection by a PAE that complies with the uniform inspection procedures in lieu of an inspection under those procedures required by any other party. We have also added a sentence to make explicit what was implicit in the interim rule—that the provisions of subpart D apply as long as the Use Agreement is in effect. Finally, we added a new paragraph (d) to this section requiring HUD to regulate the mortgagor through a regulatory agreement as long the Secretary holds the second or additional (third) mortgage under this rule. This would be in addition to any regulatory agreement required in connection with FHA mortgage insurance.

401.554 Contract Renewal and Administration [Revised Title]

We added language corresponding to section 515(a) of MAHRA, under which HUD or a public body PAE designated as contract administrator must offer to renew section 8 contracts as provided in a Restructuring Plan, subject to the availability of appropriations and subject to the renewal authority available at the time of each contract expiration. Section 524 of MAHRA (as amended by Pub. L. 106–74) will be the renewal authority.

401.556 Leasing Units to Voucher Holders

This redesignated section was § 401.483 of the interim rule under a slightly different title.

401.558 Physical Condition Standards

This redesignated section was § 401.453(a) of the interim rule under a different title. We removed language regarding duration of the requirement in the section because it duplicates new language added to § 401.550 in the final rule.

401.560 Property Management Standards

This redesignated section was § 401.484 of the interim rule.

Subpart E—Section 8 Requirements for Restructured Projects

401.595 Contract and Regulatory Provisions

Section 401.607 of the interim rule is combined with this section of the final rule. The section is expressly limited to project-based assistance because the scope is intended to be identical with § 402.3.

401.600 Will a Section 8 Contract Be Extended if It Would Expire While an Owner's Request for a Restructuring Plan Is Pending?

In the preamble to the interim rule, HUD indicated that it would typically exercise its discretion under this section to provide a contract extension at existing rents for up to 1 year by initially providing an extension of no more than 9 months. Upon further consideration, HUD currently expects to initially extend a contract at existing rents for 1 year, subject to the rule provision permitting contract termination for an owner who is uncooperative or who is rejected for Mark-to-Market restructuring. We expect to make an exception for an owner that executed a Restructuring Commitment under a demonstration program but failed to proceed. Although such an owner is eligible to request a Restructuring Plan under part 401 and a contract extension under this section, the owner will usually be given an extension at existing rents for a period that is substantially shorter than a full additional year. There is no change in the actual rule language for this section.

401.601 Consideration of an Owner's Request To Renew an Expiring Contract for an Eligible Project Without a Restructuring Plan

We redesignated this section as § 402.4(a)(2) but made no substantive revisions except as follows. We added language that ensures that a HUD or a PAE will take into account tenant and community comments received under new § 401.502 about whether contract renewal without a Restructuring Plan would be sufficient to maintain both adequate debt service coverage and necessary replacement reserves. The final rule also makes it clear that HUD, not the PAE, will make the final decision to require a Restructuring Plan. A conforming change was made to § 402.1 to reflect the section redesignation.

401.602 Tenant Protection if an Expiring Contract Is Not Renewed

Paragraphs (a) and (b) of this section have been amended to reflect changes in the underlying statutory provisions. Specifically, Pub. L. 105–276 repealed a notice requirement of former section 8(c)(8) of the United States Housing Act of 1937, and corresponding provisions of the interim rule have therefore been removed. The notice requirement of former section 8(c)(9) of the 1937 Act (now redesignated as section 8(c)(8)) was amended by both Pub. L. 105–276 and Pub. L. 106–74, so that corresponding changes have been made in the corresponding interim rule provisions of this section. Also, Pub. L. 105–276 added an additional 120-day notice requirement for contract terminations by owner who chose to pursue restructuring, with restrictions on rent increase and evictions during the notice period, and this section of the final rule reflects those provisions.

We also added language in paragraph (a) specifying that required notice to HUD is to be sent instead to the contract administrator if there is one, reflecting established practice. We made a change to clarify that an owner cannot give notice under paragraph (a) while simultaneously pursuing a Restructuring Plan and contract renewal.

We added language to paragraph (c) to clarify two points: (1) HUD's statutory obligation to make tenant-based assistance available in certain circumstances described in paragraphs (c)(1) and (c)(2) (corresponding to sections 514(d) and 516(d) of MAHRA) is subject to the usual eligibility requirements in the tenant-based assistance program regulations, and (2) tenant-based assistance is available pursuant to this section only when project-based assistance is not renewed. Pub. L. 106–74 provides for enhanced vouchers to certain tenants when project-based assistance is not continued, and this is reflected in a revision to paragragh (c).

We added cross-references to rejection under § 401.451 for poor project condition to supplement existing cross-references to rejection for that reason under § 401.403. Finally, we deleted a sentence of § 401.602(b) of the interim rule that stated that the period during which rents may not be raised begins on the earlier of the date of actual notice to tenants or the date of contract expiration. HUD's intent in including this language in the interim rule was to provide an express regulatory basis for language restricting rent increases that had previously been included in contracts to implement statutory notification requirements. However, the sentence being deleted went beyond what has been stated in actual contract language and thus was not necessary to accomplish HUD's intent. In addition, the sentence being deleted may be inconsistent with the new statutory 120-day notice requirement mentioned above. The amendment to section 514(d) of MAHRA adding the 120-day notice specifically addresses the rent increase question, as follows: If the notice is not provided, ''the owner may not evict the tenants or increase the tenants'' rent payment until such time as the owner has provided the 120-day notice and such period has elapsed.'' This appears to require both actual notice and passage of time before an owner may increase rents.

401.605 Project-Based Assistance Provisions

We added language to clarify that this section applies to the initial rents upon restructuring and not to subsequent contract renewals.

401.606 Tenant-Based Assistance Provisions

We added language similar to the addition to § 401.602(c) described above regarding eligibility under tenant-based assistance program regulations. We also revised the second sentence to conform to section 538 of Pub. L. 106–74 of enhanced vouchers.

401.607 Contract Term

This section of the interim rule is removed and its language is added to § 401.595 of the final rule.

401.650 When May the Owner Make an Administrative Appeal of a Final Decision Under This Subpart?

We made a conforming change to reflect the change to § 401.461(b)(4) regarding appeal of acceleration of the second mortgage.

401.651 Appeal Procedures

We added language to paragraph (c) to clarify that a HUD official is disqualified from considering an appeal only of a matter that the official (or someone the official reports to) was directly involved in, not every matter that falls within the official's general area of responsibility.

IV. Findings and Certifications

Paperwork Reduction Act

The information collection requirements contained in this rule have been approved by the Office of Management and Budget (OMB) in accordance with the Paperwork Reduction Act of 1995 (44 U.S.C. 3501–

3520) and assigned OMB approval number 2502–0531. An agency may not conduct or sponsor, and a person is not required to respond to, a collection of information unless the collection displays a valid control number.

Environmental Impact

A Finding of No Significant Impact (FONSI) with respect to the environment for the interim rule was made in accordance with HUD regulations in 24 CFR part 50 that implement section 102(2)(C) of the National Environmental Policy Act of 1969 (42 U.S.C. 4223). The Finding is available for public inspection between 7:30 a.m. and 5:30 p.m. weekdays in the Office of the Rules Docket Clerk, Office of General Counsel, Room 10276, Department of Housing and Urban Development, 451 7th Street, SW, Washington, DC 20410. That FONSI continues to apply for this final rule.

Executive Order 12866

The Office of Management and Budget (OMB) reviewed this final rule under Executive Order 12866, *Regulatory Planning and Review.* OMB determined that this rule is a ''significant regulatory action'' (but not economically significant) as defined in section 3(f) of the Order. The final rule will have effects outside the government, such as rehabilitation costs and associated benefits of improved housing. Based on experience under earlier demonstration authority, HUD has estimated that these effects outside of the Government do not total more than $100 million annually.

Any changes made in this final rule subsequent to its submission to OMB are identified in the docket file. The docket file is available for public inspection between 7:30 a.m. and 5:30 p.m. weekdays in the Office of the Rules Docket Clerk, Office of General Counsel, Room 10276, Department of Housing and Urban Development, 451 Seventh Street, SW, Washington, DC.

Regulatory Flexibility Act

The Secretary, in accordance with the Regulatory Flexibility Act (5 U.S.C. 605(b)), has reviewed this final rule before publication and by approving it certifies that this rule does not have a significant economic impact on a substantial number of small entities. The rule implements legislation that created a Mark-to-Market Program through which section 8 rents for multifamily projects with HUD-insured or HUD-held mortgages will be reduced in order to preserve low-income rental housing affordability while reducing the long-term costs of project-based rental assistance and minimizing the adverse effect on the FHA insurance funds. As the preamble to the rule explains, section 8 assistance is costly to the Federal Government and the cost is rising. To preserve affordable housing, Congress determined that reduction of section 8 assistance was necessary. Reduction or elimination of section 8 assistance without some type of transition or conversion process may mean that current projects assisted by section 8 may be unable to meet their financial obligations including operating expenses, current and future capital needs, and debt service payments—particularly payments on FHA-insured mortgages. To avoid this situation, the authorizing legislation and this final rule provides for a mortgage restructuring program.

In this final rule, the Department strives to provide flexible requirements in order to reduce any burden on small entities. Owners of eligible projects that are small entities, who might otherwise be unable to meet their monthly mortgage payments after HUD reduces section 8 rents to comparable market rents as mandated by law, are provided an opportunity to receive a reduction in monthly mortgage payments if they request a mortgage restructuring under the rule. As conditions of the mortgage restructuring the owners will be required to rehabilitate the project so that it meets minimum standards of housing quality and to provide for competent management. These are not new economic burdens on owners, but are project matters which owners already have a responsibility to address and should be addressing even without mortgage restructuring. The only actions required of the owner are those needed to ensure that a project provide decent and safe housing to those intended to benefit from the Federal programs involved (FHA mortgage insurance and section 8 housing assistance payments.) Again, under existing HUD regulations and contracts, owners are now subject to a decent, safe, and sanitary standard or a good repair standard. Owners choosing to request a mortgage restructuring under this final rule will continue to serve the same tenant income mix as before and will not be required to provide additional affordable housing.

Some of the Participating Administrative Entities (PAEs) selected under the final rule, such as nonprofit organizations and for-profit entities, may be small entities. In the final rule HUD has chosen to preserve for the PAE substantial discretion, within the limits of the statute, to choose the most cost-effective way of undertaking the mortgage restructuring of projects assigned to the PAE. No more projects will be assigned to a PAE than a PAE is able and willing to deal with. Each nonprofit and for-profit PAE will partner with a public entity to provide additional resources and reduce the burden of undertaking restructuring. Nothing in the final rule imposes a disproportionate burden on a small entity.

Executive Order 13132, Federalism

This final rule does not have Federalism implications and does not impose substantial direct compliance costs on State and local governments or preempt State law within the meaning of the Executive Order.

Unfunded Mandates Reform Act

Title II of the Unfunded Mandates Reform Act of 1995 (UMRA) establishes requirements for Federal agencies to assess the effects of their regulatory actions on State, local, and tribal governments, and the private sector. This rule does not impose any Federal mandates on any State, local, or tribal governments, or on the private sector, within the meaning of the UMRA.

List of Subjects

24 CFR Part 401

Grant programs-housing and community development, Housing, Housing assistance payments, Housing standards, Insured loans, Loan programs-housing and community development, Low and moderate income housing, Mortgage insurance, Mortgages, Rent subsidies, Reporting and recordkeeping requirements.

24 CFR Part 402

Housing, Housing assistance payments, Low and moderate income housing, Rent subsidies.

For the reasons set forth in the preamble, 24 CFR Chapter IV is amended to read as follows:

1. The chapter heading is revised to read as follows:

CHAPTER IV—OFFICE OF HOUSING AND OFFICE OF MULTIFAMILY HOUSING ASSISTANCE RESTRUCTURING, DEPARTMENT OF HOUSING AND URBAN DEVELOPMENT

2. Part 401 is revised to read as follows:

PART 401— MULTIFAMILY HOUSING MORTGAGE AND HOUSING ASSISTANCE RESTRUCTURING PROGRAM (MARK-TO-MARKET)

Subpart A—General Provisions; Eligibility

Sec.
401.1 What is the purpose of part 401?
401.2 What special definitions apply to this part?
401.3 Who may waive provisions in this part?
401.99 How does an owner request a section 8 contract renewal?
401.101 Which owners are ineligible to request Restructuring Plans?

Subpart B—Participating Administrative Entity (PAE) and Portfolio Restructuring Agreement (PRA)

401.200 Who may be a PAE?
401.201 How does HUD select PAEs?
401.300 What is a PRA?
401.301 Partnership arrangements.
401.302 PRA administrative requirements.
401.303 PRA indemnity provisions for SHFAs and HAs.
401.304 PRA provisions on PAE compensation.
401.309 PRA term and termination provisions; other remedies.
401.310 Conflicts of interest.
401.311 Standards of conduct.
401.312 Confidentiality of information.
401.313 Consequences of PAE violations; finality of HUD determination.
401.314 Environmental review responsibilities.

Subpart C—Restructuring Plan

401.400 Required elements of a Restructuring Plan.
401.401 Consolidated Plans.
401.402 Cooperation with owner and qualified mortgagee in Restructuring Plan development.
401.403 Rejection of a request for a Restructuring Plan because of actions or omissions of owner or affiliate or project condition.
401.404 Proposed Restructuring Commitment.
401.405 Restructuring Commitment review and approval by HUD.
401.406 Execution of Restructuring Commitment.
401.407 Closing conducted by PAE.
401.408 Affordability and use restrictions required.
401.410 Standards for determining comparable market rents.
401.411 Guidelines for determining exception rents.
401.412 Adjustment of rents based on operating cost adjustment factor (OCAF) or budget.
401.420 When must the Restructuring Plan require project-based assistance?
401.421 Rental Assistance Assessment Plan.
401.450 Owner evaluation of physical condition.
401.451 PAE Physical Condition Analysis (PCA).
401.452 Property standards for rehabilitation.
401.453 Reserves.
401.460 Modification or refinancing of first mortgage.
401.461 HUD-held second mortgage.
401.471 HUD payment of a section 541(b) claim.
401.472 Rehabilitation funding.
401.473 HUD grants for rehabilitation under section 236(s) of NHA.
401.474 Project accounts.
401.480 Sale or transfer of project.
401.481 Subsidy layering limitations on HUD funds.
401.500 Required notices to third parties and meetings with third parties.
401.501 Delivery of notices and recipients of notices.
401.502 Notice requirement when debt restructuring will not occur.
401.503 Access to information.

Subpart D—Implementation of the Restructuring Plan after Closing

401.550 Monitoring and compliance agreements.
401.552 Servicing of second mortgage.
401.554 Contract renewal and administration.
401.556 Leasing units to voucher holders.
401.558 Physical condition standards.
401.560 Property management standards.

Subpart E—Section 8 Requirements for Restructured Projects

401.595 Contract and regulatory provisions.
401.600 Will a section 8 contract be extended if it would expire while an owner's request for a Restructuring Plan is pending?
401.601 [Reserved]
401.602 Tenant protections if an expiring contract is not renewed.
401.605 Project-based assistance provisions.
401.606 Tenant-based assistance provisions.

Subpart F—Owner Dispute of Rejection and Administrative Appeal

401.645 How does the owner dispute a notice of rejection?
401.650 When may the owner make an administrative appeal of a final decision under this subpart?
401.651 Appeal procedures.
401.652 No judicial review.

Authority: 12 U.S.C. 1715z–1 and 1735f–19(b); 42 U.S.C. 1437f note and 3535(d).

Subpart A—General Provisions; Eligibility

§ 401.1 What is the purpose of part 401?

This part contains the regulations implementing the authority in the Multifamily Assisted Housing Reform and Affordability Act of 1997 (MAHRA) for the Mark-to-Market Program. Section 511(b) of MAHRA details the purposes, and section 512(2) details the scope, of the Program.

§ 401.2 What special definitions apply to this part?

(a) *MAHRA* means the Multifamily Assisted Housing Reform and Affordability Act of 1997, title V of Pub. L. 105–65, 42 U.S.C. 1437f note.

(b) *Statutory terms.* Terms defined in section 512 of MAHRA are used in this part in accordance with their statutory meaning. These terms are: comparable properties, expiring contract, expiration date, fair market rent, mortgage restructuring and rental assistance sufficiency plan, nonprofit organization, qualified mortgagee, portfolio restructuring agreement, participating administrative entity, project-based assistance, renewal, State, tenant-based assistance, and unit of general local government.

(c) *Other terms.* As used in this part, the term—

Affiliate means an ''affiliate of the owner'' or an ''affiliate of the purchaser'', as such terms are defined in section 516(a) of MAHRA.

Applicable Federal rate has the meaning given in section 1274(d) of the Internal Revenue Code of 1986, 26 U.S.C. 1274(d).

Community-based nonprofit organization means a nonprofit organization that maintains at least one-third of its governing board's membership for low-income tenants from the local community, or for elected representatives of community organizations that represent low-income tenants.

Comparable market rents has the meaning given in § 401.410(b).

Disabled family has the meaning given in § 5.403(b) of this title.

Elderly family has the meaning given in § 5.403(b) of this title.

Eligible project means a project that:

(1) Has a mortgage insured or held by HUD;

(2) Receives project-based assistance expiring on or after October 1, 1998;

(3) Has current gross potential rent for the project-based assisted units that exceeds the gross potential rent for the project based assisted units using comparable market rents;

(4) Has a first mortgage that has not previously been restructured under this part or under a Reengineering demonstration program;

(5) Is not described in section 514(h) of MAHRA; and

(6) Otherwise meets the definition of ''eligible multifamily housing project'' in section 512(2) of MAHRA.

HUD means the Director of OMHAR or a HUD official authorized to act in lieu of the Director, when used in reference to provisions of MAHRA that give responsibilities to the Director, and otherwise has the meaning given in § 5.100 of this title.

NA means the National Housing Act, 12 U.S.C. 1702 *et seq.*

OMHAR means the Office of Multifamily Housing Assistance Restructuring.

Owner means the owner of a project and any purchaser of the project.

PAE means a participating administrative entity as defined in section 512(10) of MAHRA, or HUD

when appropriate in accordance with section 513(b)(4) of MAHRA.

PCA means a physical condition assessment of a project prepared by a PAE under § 401.451.

PRA means a portfolio restructuring agreement as defined in section 512(9) of MAHRA.

Priority purchaser means a purchaser of a project, meeting qualifications established by HUD, that is:

(1) A tenant organization;

(2) A tenant-endorsed community-based nonprofit organization or public agency; or

(3) A limited partnership with a sole general partner that itself is a priority purchaser under this definition.

Rental Assistance Assessment Plan means the plan described in section 515(c)(2) of MAHRA.

Restructured rent means the rent determined at the time of restructuring in accordance with section 514(g) of MAHRA.

Restructuring Plan or *Plan* means the Mortgage Restructuring and Rental Assistance Sufficiency Plan described in section 514 of MAHRA.

Section 8 means section 8 of the United States Housing Act of 1937, 42 U.S.C. 1437f.

Section 541(b) claim means a claim paid by HUD under an insurance contract under authority of section 541(b) of the National Housing Act, 12 U.S.C. 1735f–19(b).

Tenant organization of a project means an organization that meets regularly, whose officers are elected by a majority of heads of households of occupied units in the project, and whose membership is open to all tenants of the project.

Unit of local government means the smallest unit of general local government in which the project is located.

Voucher means any tenant-based assistance.

(d) *Conflicts of interest.* Additional definitions applicable to §§ 401.310 through 401.313 appear in § 401.310.

§ 401.3 Who may waive provisions in this part?

The Director of OMHAR may waive any provision of this part, subject to § 5.110 of this title.

§ 401.99 How does an owner request a section 8 contract renewal?

(a) *Requesting Restructuring Plan.* An owner may request a section 8 contract renewal as part of a Restructuring Plan by, at least 3 months before the expiration date of any project-based assistance, certifying to HUD that to the best of the owner's knowledge:

(1) Project rents are above comparable market rents; and

(2) The owner is not suspended or debarred or has been notified by HUD of any pending suspension or debarment or other enforcement action, or, if so, a voluntary sale transfer of the property is proposed in accordance with § 401.480.

(b) *Eligible but not requesting Restructuring Plan.* If an owner is eligible for a Restructuring Plan but requests a renewal of project-based assistance without a Plan, in accordance with the applicable requirements in § 402.6 of this chapter, HUD will consider the request in accordance with § 402.4(a)(2) of this chapter.

(c) *Not eligible for Restructuring Plan.* Section 402.5 of this chapter addresses renewal of project-based assistance for a project not eligible for a Restructuring Plan. An owner of such a project may also request renewal under § 402.4.

§ 401.101 Which owners are ineligible to request Restructuring Plans?

(a) *Mandatory rejection.* The request of an owner of an eligible project will not be considered for a Restructuring Plan if the owner is debarred or suspended under part 24 of this title.

(b) *Discretion to reject.* HUD may also decide not to accept a request for a Restructuring Plan if:

(1) An affiliate is debarred or suspended under part 24 of this title; or

(2) HUD notifies the owner that HUD is engaged in a pending suspension, debarment or other enforcement action against an owner or affiliate, and the grounds for the pending action are included in § 401.403(b)(2)(ii).

(c) *Exception for sale.* This section does not apply if a sale or transfer of the property is proposed in accordance with § 401.480.

Subpart B—Participating Administrative Entity (PAE) and Portfolio Restructuring Agreement (PRA)

§ 401.200 Who may be a PAE?

A PAE must qualify under the definition in section 512(10) of MAHRA. It must not have any outstanding violations of civil rights laws, determined in accordance with criteria in use by HUD. If the PAE is a private entity, whether nonprofit or for-profit, it must enter into a partnership with a public purpose entity, which may include HUD. A PAE may delegate responsibilities only as agreed in the PRA.

§ 401.201 How does HUD select PAEs?

(a) *Selection of PAE.* HUD will select qualified PAEs in accordance with the criteria established in 513(b) of MAHRA and criteria established by HUD. The selection method is within HUD's discretion, including but not limited to a request for qualifications.

(b) *Priority for public agencies.* HUD will provide a one-time priority period for State housing finance agencies and local housing agencies to qualify as the PAEs for their jurisdictions. If more than one agency qualifies for the same jurisdiction, HUD will provide an opportunity for the agencies to allocate responsibility for projects in the jurisdiction. If the agencies are unable to agree, HUD will choose a PAE in accordance with section 513(b)(2) of MAHRA.

(c) *Qualification for PAE by nonprofit and for-profit entities.* After the priority period expires, HUD will consider other eligible entities as PAEs for jurisdictions in which no public agency has qualified as the PAE, or for projects that have not been assigned to a qualified public agency.

(d) *No PAE for project.* If HUD does not select a PAE for a project, HUD may perform the functions of the PAE, or contract with other qualified entities to perform those functions.

§ 401.300 What is a PRA?

A PRA is an agreement between HUD and a PAE that delineates rights and responsibilities in connection with development and implementation of a Restructuring Plan. The PRA must contain or incorporate by reference the matters required by section 513(a)(2) of MAHRA and §§ 401.301 through 401.314, as well as other terms and conditions required by HUD.

§ 401.301 Partnership arrangements.

If the PAE is in a partnership, the PRA must specify the following:

(a) The responsibilities of each partner regarding the Restructuring Plan;

(b) The resources each partner will provide to accomplish its designated responsibilities; and

(c) All compensation to each partner, whether direct or indirect.

§ 401.302 PRA administrative requirements.

(a) *Inapplicability of certain requirements.* Parts 84 and 85 of this title and contract procurement requirements do not apply to a PRA.

(b) *Recordkeeping.* The PAE must keep complete and accurate records of all activities related to the PAE's performance under the PRA. The PAE must retain the records for at least 3 years after the PRA terminates.

(c) *Inspection of records and audit.* Upon reasonable notice, the PAE must

permit the Comptroller General of the United States and HUD (including representatives of the HUD Office of Inspector General) to inspect, audit, and copy any records required to be retained under this section.

§ 401.303 PRA indemnity provisions for SHFAs and HAs.

When a PRA requires HUD to indemnify a PAE in accordance with section 513(a)(2)(G) of MAHRA, any payment under this indemnity is contingent upon the availability of funds that are permitted by law to be used for this purpose.

§ 401.304 PRA provisions on PAE compensation.

(a) *Base fee.* (1) The PRA will provide for base fees to be paid by HUD.

(2) HUD will conduct an annual survey of the market price for the scope of work. The results of each survey will be used to establish a uniform baseline for public entities. The base fee for a PAE will be adjusted if necessary after the first term of the PRA.

(3) Private PAEs will be compensated based on the results of a competitive bid process which evaluates bidders' capability, timeliness, ability to work with tenant and community groups, and cost.

(b) *Incentives.* The PRA may provide for incentives to be paid by HUD. While individual components may vary between PAEs (both public and private), the total amount payable under the incentive package will be uniform. Objectives will include maximizing savings to the Federal Government, timely performance, tenant satisfaction with the PAE's performance, the infusion of public funds from non-HUD sources, and other benchmarks that HUD considers appropriate.

(c) *Expenses.* The PRA will identify expenses incurred by the PAE that will qualify for reimbursement by HUD. Limits on these expenses will be established annually by HUD, but HUD may waive the limits for high-cost areas.

(d) *Other matters.* The Director of OMHAR will retain the right of final approval of any fee schedule on behalf of HUD. HUD will publish the standard form of PRA and the compensation package annually on its Internet website.

§ 401.309 PRA term and termination provisions; other remedies.

(a) *1-year term with renewals.* The PRA will have a term of 1 year, to be renewed for successive terms of 1 year with the mutual agreement of both parties. The PRA will provide for HUD to pay final compensation to the PAE and to assign responsibility for continuing activities if the PRA is not renewed.

(b) *Termination for cause or convenience of Federal Government.* (1) *Termination for cause.* HUD may terminate a PRA at any time for cause, with payment required by HUD as provided in the PRA only for matters authorized by the PRA and performed by the PAE to the date of termination. HUD will retain the right of set-off against any payments due as well as such other rights afforded at law and in equity.

(2) *Termination for convenience of Federal Government.* HUD may terminate a PRA at any time in accordance with the PRA or applicable law regardless of whether the PAE is in default of any of its obligations under the PRA if such termination is in the best interests of the Federal Government. The PRA will provide for payment to the PAE of a specified percentage of the base fee authorized by § 401.304(a) and amounts for reimbursement of third-party vendors to the PAE authorized by § 401.304(c).

(3) *Transfer to another PAE; temporary waiver of rights.* If a PRA is terminated:

(i) HUD may order an immediate transfer of some or all of the PAE's duties to another PAE designated by HUD; and

(ii) HUD may temporarily waive its right of immediate termination in order to allow an orderly transfer of duties and responsibilities under a PRA, without waiving the right of termination after the transfer has been completed to HUD's satisfaction.

(c) *Liability for damages.* During the term of a PRA, or notwithstanding any termination of a PRA, HUD may seek its actual, direct, and consequential damages from any PAE failure to comply with its obligations under the PRA.

(d) *Cumulative remedies.* The remedies under this section are cumulative and in addition to any other remedies or rights HUD may have under the terms of the PRA, at law, or otherwise.

§ 401.310 Conflicts of interest.

(a) *Definitions.*—(1) *Conflict of interest* means a situation in which a PAE or other restricted person:

(i) Has a financial interest, direct or indirect, that prevents or may prevent the PAE or other restricted person from acting at all times in the best interests of HUD;

(ii) Has one or more personal, business, or financial interests or relationships that would cause a reasonable person with knowledge of the relevant facts to question the integrity or impartiality of those who are or will be acting under the PRA; or

(iii) Is taking an adverse position to HUD or to an owner whose project is covered by a PRA in a lawsuit, administrative proceeding, or other contested matter.

(2) *Control* means the power to vote, directly or indirectly, 25 percent or more of any class of the voting stock of a company; the ability to direct in any manner the election of a majority of a company (or other entity's) directors or trustees; or the ability to exercise a controlling influence over the company or entity's management and policies. For purposes of this definition, a general partner of a limited partnership is presumed to be in control of that partnership.

(3) *Restricted person* means a PAE; any management official of the PAE; any legal entity that is under the control of the PAE, is in control of the PAE, or is under common control with the PAE; or any employee, agent or contractor of the PAE, or employee of such agent or contractor, who will perform or has performed services under a PRA with HUD.

(b) *General prohibitions.* (1) The PAE may not permit conflicts of interest to exist without obtaining a waiver in accordance with this section.

(2) The PAE must establish procedures to identify conflicts of interest and to ensure that conflicts of interest do not arise or continue, subject to waiver under paragraph (c) of this section.

(3) HUD will not enter into PRAs with potential PAEs who have conflicts of interest associated with a particular project, or permit PAEs to continue performance under existing PRAs when such PAEs have conflicts of interest, unless such conflicts have been eliminated to HUD's satisfaction by the PAE or potential PAE or are waived by HUD.

(4) The PAE has a continuing obligation to take all action necessary to identify whether it or any other restricted person has a conflict of interest.

(c) *Waivers.* HUD will waive conflicts of interest only when, in light of all relevant circumstances, the interests of HUD in the PAE's or another restricted persons's participation outweigh the concern that a reasonable person may question the integrity of HUD's operations.

(d) *Conflicts of interest arising prior to PAE selection.*—(1) *Request for review of conflicts of interest.* (i) A potential PAE, with its request to HUD for consideration for selection as a PAE,

must identify existing conflicts of interest and may make a written request for a determination as to the existence of a conflict of interest, may request that the conflict of interest, if any, be waived, or may propose how it could eliminate the conflict.

(ii) If, after submitting a request but prior to selection, a potential PAE discovers that it has a conflict, it must notify HUD in writing within 10 days of submitting the request or prior to selection, whichever is earlier. Such notification must contain a detailed description of the conflict. The potential PAE may, with its notices, request that the conflict be waived or may propose how it may eliminate the conflict. The potential PAE may also request a determination as to the existence of the conflict.

(2) *Review by HUD.* Subject to the restrictions set forth in this section, HUD in its sole discretion may determine whether a conflict of interest exists, may waive the conflict of interest, or may approve in writing a PAE's proposal to eliminate a conflict of interest.

(e) *Conflicts of interest that arise or are discovered after PAE selection.* (1) A PAE must notify HUD in writing within 10 days after discovering that it or another restricted person has a conflict of interest. Such notification must contain a detailed description of the conflict of interest and state how the PAE intends to eliminate the conflict. The PAE may also request a determination as to the existence of a conflict.

(2) HUD will, after receipt of such notification or other discovery of the PAE's conflict or potential conflict of interest, take such action as it determines is in its best interests, which may involve proceeding under § 401.313 or as provided in the following sentences. HUD may notify the PAE in writing of its findings as to whether a conflict of interest exists and the basis for such determination, whether or not a waiver will be granted, or whether corrective actions may be taken in order to eliminate the conflict of interest. Corrective action must be completed by the PAE not later than 30 days after notification is mailed by HUD unless HUD, at its sole discretion, determines that it is in its best interests to grant the PAE an extension in which to complete the corrective action.

(f) *Reconsideration of decisions.* Decisions issued pursuant to this section may be reconsidered by HUD upon application by the PAE. Such requests must be in writing and must contain the basis for the request. HUD may, at its discretion and after determining that it is in its best interests, stay any corrective or other actions previously ordered pending reconsideration of a decision.

§ 401.311 Standards of conduct.

(a) *Minimum ethical standards for PAEs.* In connection with the performance of any PRA and during the term of such PRA, a PAE or other restricted person (as defined in § 401.310) may not:

(1) Solicit for itself or others favors, gifts, or other items of monetary value from any person who is seeking official action from HUD or the PAE in connection with the PRA or has interests that may be substantially affected by the restricted person's performance or nonperformance of duties to HUD;

(2) Use improperly (or allow the improper use of) HUD property or property over which the restricted person has supervision or charge by reason of the PRA;

(3) Use its status as PAE for its own benefit, or the financial or business benefit of a third party, except as contemplated by the PRA; or

(4) Make any unauthorized promise or commitment on behalf of HUD.

(b) *18 U.S.C. 201.* Pursuant to 18 U.S.C. 201, whoever acts for or on behalf of HUD in connection with the matters covered by this part is deemed to be a public official. Public officials are prohibited from soliciting or accepting anything of value in return for being influenced in the performance of official actions. Violators are subject to criminal sanctions.

(c) *18 U.S.C. 1001.* Pursuant to 18 U.S.C. 1001, whoever knowingly and willingly falsifies a material fact, makes a false statement or utilizes a false writing in connection with a PRA is subject to criminal sanctions. Other Federal civil statutes also apply to making false statements to the United States.

(d) *18 U.S.C. 207.* Former Federal Government employees are subject to the prohibitions in 18 U.S.C. 207.

§ 401.312 Confidentiality of information.

A PAE and every other restricted person (as defined in § 401.310) has a duty to protect confidential information, except as provided in §§ 401.500 through 401.503, and to prevent its use to further a private interest other than as contemplated by the PRA. As used in this section, confidential information means information that a PAE or other restricted person obtains from or on behalf of HUD or a third party in connection with a PRA but does not include information generally available to the public unless the information becomes available to the public as a result of unauthorized disclosure by the PAE or another restricted person.

§ 401.313 Consequences of PAE violations; finality of HUD determination.

(a) *Effect on PRA.* If a PAE, potential PAE or other restricted person (as defined in § 401.310) violates §§ 401.310, 410.311, or 401.312, HUD may:

(1) Find the potential PAE unqualified to enter into a PRA;

(2) Find the PAE unqualified to receive additional projects for restructuring under an existing PRA;

(3) Find the PAE in default under an existing PRA with the right of termination for cause under § 401.309; or

(4) Seek from a PAE or other restricted person HUD's actual, direct, and consequential damages resulting from the violation.

(b) *Cumulative remedies.* The remedies under this section are cumulative and in addition to any other remedies or rights HUD may have under the terms of the PRA, at law, or otherwise.

(c) *Finality of determination.* Any determination made by HUD pursuant to this section is at HUD's sole discretion and is not subject to further administrative review.

§ 401.314 Environmental review responsibilities.

HUD will retain all responsibility for environmental review under part 50 of this title. Compliance with part 50 of this title will be completed before any HUD approval of the Restructuring Commitment under § 401.405.

Subpart C—Restructuring Plan

§ 401.400 Required elements of a Restructuring Plan.

(a) *General.* A PAE is responsible for the development of a Restructuring Plan for each project included in its PRA.

(b) *Required elements.* The Restructuring Plan must contain a narrative that fully describes the restructuring transaction. The Restructuring Plan must include the elements required by section 514(e) of MAHRA. The Restructuring Plan must describe the use of any restructuring tools listed at sections 517(a) and (b) of MAHRA, and must contain other requirements as determined by HUD.

§ 401.401 Consolidated Plans.

A PAE may request HUD to approve a Consolidated Restructuring Plan that presents an overall strategy for more than one project included in the PRA.

HUD will consider approval of a Consolidated Restructuring Plan for projects having common ownership, geographic proximity, common mortgagee or servicer, or other factors that contribute to more efficient use of the PAE's resources. Notwithstanding the more efficient use of a PAE's resources, HUD will not approve any Consolidated Restructuring Plans that have a detrimental effect on tenants or the community, or a higher cost to the Federal Government.

§ 401.402 Cooperation with owner and qualified mortgagee in Restructuring Plan development.

A PAE must comply with section 514(a)(2) of MAHRA by using its best efforts to seek the cooperation of the owner and qualified mortgagee or its designee in the development of the Restructuring Plan. If the owner fails to cooperate (as demonstrated by reasonable progress in development of a Restructuring Plan) to the satisfaction of the PAE and HUD agrees, the PAE must notify the owner that the PAE will not develop a Restructuring Plan. This notice will be subject to dispute and administrative appeal under subpart F of this part. If the qualified mortgagee does not cooperate in modifying the mortgage, the PAE and owner may continue to develop a Restructuring Plan to restructure the loan using alternative financing.

§ 401.403 Rejection of a request for a Restructuring Plan because of actions or omissions of owner or affiliate or project condition.

(a) *Ongoing determination of owner and project eligibility.* Notwithstanding an initial determination to accept the owner's request for a Restructuring Plan, the PAE is responsible for a further more complete and ongoing assessment of the eligibility of the owner and project while the Restructuring Plan is developed. The PAE must advise HUD if at any time any of the grounds for rejection listed in paragraph (b) of this section exist.

(b) *Grounds for rejection.*—(1) *Suspension or debarment.* Neither a PAE nor HUD will continue to develop or consider a Restructuring Plan if, at any time before a closing under § 401.407, the owner is debarred or suspended under part 24 of this title.

(2) *Other grounds.* HUD may elect not to permit continued consideration of the Restructuring Plan at any time before closing under § 401.407, if:

(i) An affiliate is debarred or suspended under part 24 of this title;

(ii) HUD or the PAE determines that the owner or an affiliate has engaged in material adverse financial or managerial actions or omissions as described in section 516(a) of MAHRA, including any outstanding violations of civil rights laws in connection with any project of the owner or affiliate; or

(iii) HUD or the PAE determines (under § 401.451(c) or otherwise) that the project does not meet the housing quality standards in § 401.558 and that the poor condition of the project is not likely to be remedied in a cost-effective manner through the Restructuring Plan.

(3) *Exception for sale.* This paragraph does not apply (except (2)(iii)) if a sale or transfer is proposed under § 401.480.

(c) *Dispute and appeal.* An owner may dispute a rejection under this section and seek administrative review under the procedures in subpart F of this part.

§ 401.404 Proposed Restructuring Commitment.

A PAE must submit a Restructuring Plan and a proposed Restructuring Commitment to HUD for approval, prior to submitting the Commitment to the owner for execution. The submission may not occur earlier than 10 days after the public meeting required by § 401.500(d). The proposed Restructuring Commitment must be in a form approved by HUD, incorporate the Restructuring Plan, and include the following:

(a) The lender, loan amount, interest rate, and term of any mortgages or unsecured financing for the mortgage restructuring and rehabilitation, and any credit enhancement;

(b) The amount of any payment of a section 541(b) claim;

(c) The type of section 8 assistance and the section 8 restructured rents;

(d) The rehabilitation required, the source of the owner contribution, and escrow arrangements;

(e) The uses for project accounts;

(f) The terms of any sale or transfer of the project;

(g) A schedule setting forth all sources and uses of funds to implement the Restructuring Plan, including setting forth the balances of project accounts before and after restructuring;

(h) All consideration, direct or indirect, received or to be received by the PAE or a related party, if known, in connection with any matter addressed in the Restructuring Commitment, except amounts paid or to be paid by HUD; and

(i) Other terms and conditions prescribed by HUD.

§ 401.405 Restructuring Commitment review and approval by HUD.

HUD will either approve the Restructuring Commitment as submitted, require changes as a condition for approval, or reject the Plan. If the Plan is rejected, HUD will inform the PAE of the reasons for rejection, and the PAE will inform the owner. HUD's rejection of the Plan is subject to the dispute and administrative appeal provisions of subpart F of this part.

§ 401.406 Execution of Restructuring Commitment.

When HUD approves the Restructuring Commitment, the PAE will deliver the Restructuring Commitment to the owner for execution. The Restructuring Commitment becomes binding upon execution by the owner. An owner who does not execute the Restructuring Commitment may appeal its terms and seek modification under subpart F of this part.

§ 401.407 Closing conducted by PAE.

After the owner has executed the Restructuring Commitment, the PAE must arrange for a closing to execute all documents necessary for implementation of the Restructuring Plan. The PAE must use standard documents approved by HUD, with modifications only as necessary to comply with applicable State or local laws, or such other modifications as are approved in writing by HUD.

§ 401.408 Affordability and use restrictions required.

(a) *General.* The Restructuring Plan must provide that the project will be subject to affordability and use restrictions in a Use Agreement acceptable to HUD. The Use Agreement must be recorded and in effect for at least 30 years. It must include at least the provisions required by paragraphs (b) through (j) of this section.

(b) *Use restriction.* The project must continue to be used for residential use with no reduction in the number of residential units without prior HUD approval.

(c) *Affordability restrictions.* Except during a period when at least 20 percent of the units in a project receive project-based assistance:

(1) At least 20 percent of the units in the project must be leased to families whose adjusted income does not exceed 50 percent of the area median income as determined by HUD, with adjustments for household size, at rents no greater than 30 percent of 50 percent of the area median income; or

(2) At least 40 percent of the units in the project must be leased to families whose adjusted income does not exceed 60 percent of the area median income as determined by HUD, with adjustments

for household size, at rents no greater than 30 percent of 60 percent of the area median income.

(d) *Comparable configuration.* The type and size of the units that satisfy the affordability restrictions of paragraph (c) of this section must be comparable to the type and size of the units for the project as a whole.

(e) *Nondiscrimination against voucher holders.* An owner must comply with the nondiscrimination provisions of § 401.556.

(f) *Enforcement.* The Use Agreement must contain remedies for breach of the Use Agreement, including monetary damages for non-compliance with paragraphs (c) and (g) of this section.

(g) *Compliance with physical condition standards.* The Use Agreement must require that the property be maintained in compliance with the requirements of § 401.558.

(h) *Reporting.* The Use Agreement must contain appropriate financial and other reporting requirements for the owner. These reports must comply with the Real Estate Assessment Center protocol or subsequent standards required by HUD.

(i) *Enforcement and amendment.* The Use Agreement will be enforceable by interested parties to be specified in the Agreement, which will include HUD, the PAE, project tenants, organizations representing project tenants, and the unit of local government. The Use Agreement must require the party bringing enforcement action to give the owner notice and a reasonable opportunity to cure any violations.

(j) *Modifications.* HUD will retain the right to approve modifications of the Use Agreement agreed to by the owner without the consent of any other party, including those having the right of enforcement. The owner must post prominently on project property notice of any modifications approved by HUD.

(k) *Owner obligation to accept project-based assistance.* Subject to the availability of appropriated funds, the owner of the project must accept any offer of renewal or extension of project-based assistance if the offer is in accordance with the terms and conditions specified in the Restructuring Plan.

§ 401.410 Standards for determining comparable market rents.

(a) *When are comparable market rents required?* The Restructuring Plan must establish restructured rents for project-based assistance at comparable market rents unless the PAE finds that exception rents are necessary under § 401.411.

(b) *Comparable market rents defined.* Comparable market rents are the rents charged for properties that the PAE determines to be comparable properties (as defined in section 512(1) of MAHRA, but also excluding section 202 or section 811 projects assisted under part 891 of this title). For purposes of section 512(1), other relevant characteristics include any applicable rent control and other characteristics determined by the PAE. The PAE may make appropriate adjustments when needed to ensure comparability of properties.

(c) *Methodology for determining comparable market rents.* If the PAE is unable to identify at least three comparable properties within the local market, the PAE may:

(1) Use non-comparable housing stock within that market from which adjustments can be made; or

(2) If necessary to go outside the market, use comparable properties as far outside the local market as it finds reasonable, from which adjustments can be made.

(d) *Using FMR as last resort.* If the PAE is unable to identify enough properties under paragraph (c) of this section, comparable market rents must be set at 90 percent of the Fair Market Rents for the relevant market area.

§ 401.411 Guidelines for determining exception rents.

(a) *When do exception rents apply?* (1) The Restructuring Plan may provide for exception rents established under section 514(g)(2) of MAHRA for project-based assistance if the PAE determines that project income under the rent levels established under § 401.410 would be inadequate to meet the costs of operating the project as described in paragraph (b) of this section and that the housing needs of the tenants and the community could not be adequately addressed.

(2) In any fiscal year, the PAE may not request HUD to approve Restructuring Plans with exception rents for more than 20 percent of all units covered by the PRA, except that HUD may approve a waiver of this 20 percent limitation based on the PAE's narrative explanation of special need.

(b) *How are exception rents calculated?* (1) Exception rents must be set at a level sufficient to support the costs of operating the project. The PAE must take into account the following cost items:

(i) Debt service on the second mortgage under § 401.461(a) or a rehabilitation loan included in the Restructuring Plan;

(ii) The operating expenses of the project, as determined by the PAE, including:

(A) Contributions to adequate reserves for replacement;

(B) The costs of maintenance and necessary rehabilitation;

(C) Other eligible costs permitted under the section 8 program;

(iii) An adequate allowance for potential operating losses due to vacancies and failure to collect rents, as determined by the PAE;

(iv) A return to the owner to the extent permitted by § 401.461(b)(3)(ii)(A); and

(v) Other expenses determined by the PAE to be necessary for the operation of the project.

(2) The exception rent must not exceed 120 percent of the Fair Market Rent for the market area, except that HUD may approve an exception rent greater than 120 percent of Fair Market Rent, based on a narrative explanation of special need submitted by the PAE, subject to the 5 percent limitation in section 514(g)(2)(A) of MAHRA.

§ 401.412 Adjustment of rents based on operating cost adjustment factor (OCAF) or budget.

(a) *OCAF.* (1) The Restructuring Plan must provide for annual adjustment of the restructured rents for project-based assistance by an OCAF determined by HUD.

(2) *Application of OCAF.* HUD will apply the OCAF to the previous year's contract rent less the portion of that rent paid for debt service. This paragraph applies to renewals of contracts in subsequent years which receive restructured rents under either section 514(g)(1) or (2) of MAHRA.

(b) *Budget-based.* Rents will be adjusted on a budget basis instead of OCAF only upon owner request, subject to HUD approval.

§ 401.420 When must the Restructuring Plan require project-based assistance?

The Restructuring Plan must provide for the section 8 contract to be renewed as project-based assistance, subject to the availability of funds for this purpose, if:

(a) The PAE determines there is a market-wide vacancy rate of 6 percent or less;

(b) At least 50 percent of the units in the project are occupied by elderly families, disabled families, or elderly and disabled families; or

(c) The project is held by a nonprofit cooperative ownership housing corporation or nonprofit cooperative housing trust.

§ 401.421 Rental Assistance Assessment Plan.

(a) *Plan required.* For any project not subject to mandatory project-based assistance under § 401.420, the PAE must develop a Rental Assistance Assessment Plan in accordance with section 515(c)(2) of MAHRA to determine whether assistance should be renewed as project-based assistance or whether some or all of the assisted units should be converted to tenant-based assistance.

(b) *Matters to be assessed.* The PAE must include an assessment of the impact of converting to tenant-based assistance and the impact of extending project-based assistance on:

(1) The ability of the tenants to find adequate, available, decent, comparable, and affordable housing in the local market;

(2) The types of tenants residing in the project (such as elderly families, disabled families, large families, and cooperative homeowners);

(3) The local housing needs identified in the applicable Consolidated Plan developed under part 91 of this title;

(4) The cost of providing assistance, comparing the applicable payment standard to the rent levels permitted by §§ 401.410 and 401.411;

(5) The long-term financial stability of the project;

(6) The ability of residents to make reasonable choices about their individual living situations;

(7) The quality of the neighborhood in which the tenants would reside; and

(8) The project's ability to compete in the marketplace.

(c) *Conversion may be phased in.* Any conversion from project-based assistance to tenant-based assistance may occur over a period of not more than 5 years if the PAE decides the transition period is needed for the financial viability of the project.

(d) *Reports to HUD.* The PAE must report to HUD on the matters specified in section 515(c)(2)(C) of MAHRA at least semi-annually.

§ 401.450 Owner evaluation of physical condition.

(a) *Initial evaluation.* The owner must evaluate the physical condition of the project and provide the following information to the PAE in a form acceptable to the PAE:

(1) All work items required to bring the project to the standard in § 401.452, including any work items needed to ensure compliance with applicable requirements of part 8 of this title concerning accessibility to persons with disabilities;

(2) The capital repair or replacement items that will be necessary to maintain the long-term physical integrity of the property;

(3) A plan for funding the rehabilitation work included in paragraph (a)(1) of this section, which work must be completed in a timely manner after closing the restructuring transaction, that identifies the source of the required owner contribution of non-project funds; and

(4) An estimate of the initial deposit, if any, and the estimated monthly deposit to the reserve for replacement account for the next 20 years.

(b) *Use of CA.* An owner may comply with paragraph (a) of this section by submitting a comprehensive needs assessment in accordance with Title IV of the Housing and Community Development Act of 1992 (12 U.S.C. 1715z–1a note) if the CA:

(1) Was completed or updated within 1 year; and

(2) Contains all of the matters required by paragraph (a) of this section.

(c) *Reconsideration and modification of evaluation.* If the PAE, after its independent review under § 401.451, determines that the owner's evaluation either fails to address specific necessary work items or fails to propose a cost-effective approach to rehabilitation, the owner may modify its evaluation to satisfy the concerns of the PAE.

§ 401.451 PAE Physical Condition Analysis (PCA).

(a) *Review and certification of owner evaluation.* (1) The PAE must independently evaluate the physical condition of the project by means of a PCA. If the PAE finds any immediate threats to health and safety, the owner must complete those work items immediately, or the PAE must evaluate the project's eligibility in accordance with § 401.403(b)(2)(iii).

(2) After consultation with the owner and an opportunity for the owner to modify its evaluation performed under § 401.450, the PAE must either certify to the accuracy and completeness of the owner's evaluation performed under § 401.450 for each project covered by the PRA, or state that the evaluation fails to address certain items or does not propose a cost effective approach.

(b) *Rejection due to inaccurate or incomplete owner evaluation.* If the PAE cannot certify to the accuracy and completeness of the owner's evaluation due to its failure to address specific work items or because it does not propose a cost effective approach, the PAE must notify HUD. If HUD agrees with the PAE's determination, the PAE must notify the owner that the request for a Restructuring Plan is rejected.

(c) *Rejection due to poor condition of the project.* Based on the completed PCA, the PAE must determine whether proceeding with a Restructuring Plan with necessary rehabilitation is more cost-effective in terms of Federal resources than rejecting the Request for a Restructuring Plan under § 401.403(b)(2)(iii) and providing tenant-based assistance for displaced tenants under § 401.602. HUD will provide guidance to PAEs for making the determination. If the PAE concludes that a request for a Restructuring Plan should be rejected because of lack of cost-effectiveness due to poor condition of the project, it must also consider the effect on tenants and the community and advise HUD of the effect. HUD will make the final decision after considering the PAE's recommendation.

(d) *Dispute and appeal of rejection.* The dispute and appeal provisions of subpart F of this part apply to rejections under paragraphs (b) and (c) of this section.

§ 401.452 Property standards for rehabilitation.

The Restructuring Plan must provide for the level of rehabilitation needed to restore the property to the non-luxury standard adequate for the rental market for which the project was originally approved. If the standard has changed over time, the rehabilitation may include improvements to meet current standards. The result of the rehabilitation should be a project that can attract non-subsidized tenants but competes on rent rather than on amenities. When a range of options exists for satisfying the rehabilitation standard or the plan for capital replacement, the PAE must choose the least costly option considering both capital and operating costs and taking into account the marketability of the property and the remaining useful life of all building systems. Nothing in this part exempts rehabilitation from the requirements of part 8 of this title concerning accessibility to persons with disabilities.

§ 401.453 Reserves.

The Restructuring Plan must provide for reserves for capital replacement sufficient to ensure the property's long-term structural integrity so that the property can be maintained as affordable housing in decent, safe, and sanitary condition meeting the standards of § 401.558.

§ 401.460 Modification or refinancing of first mortgage.

(a) *Principal amount.* As part of the Restructuring Plan, the PAE will

determine the size of the restructured first mortgage that will result from the modification or refinancing of the existing FHA-insured or HUD-held first mortgage. The restructured first mortgage must be in the amount that can be supported by net operating income based on the lower of the restructured section 8 rents or the rents allowed by the Use Agreement under § 401.408. Neither the outstanding principal balance of the existing first mortgage, nor the monthly principal and interest payments on that debt, may be increased through modification under the Restructuring Plan. The debt service coverage used by the PAE must be adequate for purposes of the Restructuring Plan and for the requirements of any refinancing.

(b) *Fully amortizing.* The modified or refinanced first mortgage must be fully amortizing through level monthly payments.

(c) *Rates and other terms.* Interest rates and other terms of the modified or refinanced first mortgage must be competitive in the market.

(d) *Fees.* Any fees or costs associated with mortgage modification or refinancing determined by the PAE to be above normal processing fees must be paid by the owner from non-project funds and must not be included in the modified or refinanced first mortgage.

(e) *Refinancing.* (1) The owner must contact the mortgagee to determine the mortgagee's willingness to consider a modification and re-amortization of the existing first mortgage through a Restructuring Plan before considering any other source of first mortgage financing. If the mortgagee does not agree to modify and re-amortize in accordance with the Restructuring Plan, the loan must be refinanced.

(2) The refinancing may be either without credit enhancement or with credit enhancement under one of the following:

(i) *FHA mortgage insurance.* If the Restructuring Plan provides for FHA mortgage insurance for the refinanced first mortgage, the insurance will be provided in accordance with all usually applicable FHA legal requirements except that insurance will be documented as provided in section 517(b)(2) of MAHRA. HUD will issue the commitment for mortgage insurance but may adapt its procedures as necessary to facilitate development and implementation of a Restructuring Plan.

(ii) *Other FHA credit enhancement.* If FHA credit enhancement, including risk-sharing, is provided under part 266 of this title, the credit enhancement will be provided in accordance with all usually-applicable FHA legal requirements under part 266 of this title, except that special approval from HUD will be required before the PAE engages in risk-sharing with FHA under part 266 of this title. HUD will approve risk-sharing financing that complies with part 266 whenever required by section 517(b)(3) of MAHRA.

(iii) *Credit enhancement from non-FHA sources.* If credit enhancement is to be provided by a non-FHA source under section 517(b)(4) of MAHRA, HUD will consider waiver of any non-statutory provision in this part only if the waiver will not materially impair achievement of the purposes of MAHRA and if the waiver is essential to meet the legitimate business or legal requirements of the provider of credit enhancement.

§ 401.461 HUD-held second mortgage.

(a) *Amount.* (1) The Restructuring Plan must provide for a second mortgage to HUD whenever the Plan provides for either payment of a section 541(b) claim or the modification or refinancing of a HUD-held first mortgage that results in a first mortgage with a lower principal amount. The term ''second mortgage'' in this section also includes a new HUD-held first mortage (not a refinancing mortgage) if a full payment of claim is made under § 401.471, or if § 401.460(a) does not permit a restructured first mortgage in any amount.

(2) The second mortgage must be in a principal amount that does not exceed the lesser of:

(i) The amount the PAE reasonably expects to be repaid based on objective criteria such as the amount of anticipated net cash flow, trending assumptions, amortization provisions, and expected residual value of the property; and

(ii) The difference between the unpaid balance on the first mortgage immediately before and after the restructuring.

(b) *Terms and conditions.* (1) The second mortgage must have an interest rate of at least 1 percent, but not more than the applicable Federal rate. Interest will accrue but not compound.

(2) The second mortgage must have a term concurrent with the modified or refinanced first mortgage, if any. HUD may provide that if there is no first mortgage, the second mortgage may continue for a term established by HUD.

(3)(i) Principal and interest on the second mortgage is payable only out of net cash flow during its term. ''Net cash flow'' means that portion of project income that remains after the payment of all required debt service payments on the modified or refinanced first mortgage, if any, including payment of any past due principal or interest, and payment of all reasonable and necessary operating expenses (including deposits to the reserve for replacement account) and any other expenditure approved by HUD.

(ii) The priority and distribution of net cash flow is as follows:

(A) HUD or the PAE may approve the payment to the owner of up to 25 percent of net cash flow based on consideration of relevant conditions and circumstances including, but not limited to, compliance with the management standards prescribed in § 401.560 and the physical condition standards prescribed in § 401.558; and

(B) All remaining net cash flow will be applied to the principal and interest on the second mortgage, until paid in full, and then to any additional subordinate mortgage under § 401.461(c).

(4) HUD may cause the second mortgage to be immediately due and payable on the grounds provided in section 517(a)(4) of MAHRA, including an assumption of the mortgage in violation of HUD standards for approval of transfers of physical assets (if applicable), or if the owner materially fails to comply with other material HUD requirements after a reasonable opportunity for the owner to cure such failure. A decision by HUD in this regard is subject to the administrative appeals procedure in subpart F of this part, unless HUD acts on the basis of the grounds specified in sections 517(a)(4)(A) or (B) of MAHRA.

(5) HUD will consider modification or forgiveness of all or part of the second mortgage only if the project has been sold or transferred to a priority purchaser under § 401.480 and HUD determines that modification or forgiveness is necessary to recapitalize the project in order to preserve it as affordable housing.

(c) *Additional mortgage to HUD.* A Restructuring Plan may require the owner to give an additional mortgage on the project to HUD in an amount that does not exceed the difference between the amount of a section 541(b) claim paid under § 401.471 and the principal amount of the second mortgage. HUD will provide guidance to PAEs regarding the circumstances under which a Plan may be negotiated that provides for less than the full difference to be payable under the additional mortgage. This additional mortgage must be junior in priority to the second mortgage required by paragraph (a) of this section, bear interest at the same rate, which will accrue but not compound, and require no payment until the second mortgage is satisfied, when it will be payable

upon demand of the Secretary or as otherwise agreed by the Secretary.

§ 401.471 HUD payment of a section 541(b) claim.

HUD will pay a section 541(b) claim from the appropriate insurance fund to the insured mortgagee on behalf of the mortgagor. The mortgagee must use the claim payment to prepay the principal balance of the insured mortgage, in whole or in part, as provided in the Restructuring Plan. All section 541(b) claims will be paid in cash. Part 207 of this title and sections 207(g) and 541(a) of the NA do not apply to a section 541(b) claim.

§ 401.472 Rehabilitation funding.

(a) *Sources of funds.*—(1) *Project accounts.* The Restructuring Plan for funding rehabilitation must include funds from the project's residual receipts account, surplus cash account, replacement reserve account, and other project accounts, to the extent the PAE determines that those accounts will not be needed for the initial deposit to the reserves.

(2) *Debt restructuring.* The Restructuring Plan may provide for funding of rehabilitation through a new first mortgage in conjunction with a payment of a section 541(b) claim. The payment of claim may be in an amount necessary to facilitate the funding of the rehabilitation, by reducing the existing first mortgage debt to make refinancing proceeds available to fund rehabilitation.

(3) *Section 236(s) rehabilitation grant.* The Restructuring Plan may include a direct grant from HUD under section 236(s) of the NA made in accordance with § 401.473, to the extent that HUD has determined that funding is available for such a grant.

(4) *Section 8 budget authority increase.* The Restructuring Plan may include funding of rehabilitation from budget authority provided to HUD for increases in section 8 contracts, to the extent that HUD has determined that funding from this source is available.

(b) *Statutory restrictions.* Any rehabilitation funded from the sources described in paragraph (a) of this section is subject to the requirements in section 517(b)(7) of MAHRA for an owner contribution. The required owner contribution will be calculated as 20 percent of the total cost of rehabilitation, unless HUD or the PAE determines that a higher percentage is required. The owner contribution must include a reasonable proportion (as determined by HUD) of the total cost of rehabilitation from non-governmental resources. The PAE may exempt housing cooperatives from the owner contribution requirement.

(c) *Escrow agent.* The Restructuring Plan must provide for progress payments for rehabilitation, which must be disbursed by an acceptable escrow agent subject to PAE oversight or as otherwise provided by HUD.

§ 401.473 HUD grants for rehabilitation under section 236(s) of NA.

HUD will consider a direct grant for rehabilitation under section 236(s) of the NA only if the owner provides an acceptable work schedule and cost-analysis that is consistent with the owner's evaluation of physical condition under § 401.450, as certified by the PAE. The owner must execute a grant agreement with terms and conditions acceptable to HUD. If the PAE is a State or local government, or an agency or instrumentality of such a government, the PAE and HUD may agree that the PAE will be delegated the responsibility for the administration of any grant made under this section. HUD may make grant funding available for the cost of administration if HUD has determined that such funding is available.

§ 401.474 Project accounts.

(a) *Accounts from other projects.* The accounts listed in § 401.472(a)(1) may be used for other eligible projects only if:

(1) The projects are included in a Consolidated Restructuring Plan under § 401.401; and

(2) The funds are used for rehabilitation or to reduce a section 541(b) claim paid by HUD under § 401.471.

(b) *Distribution to owner.* The Restructuring Plan may provide for a one-time distribution to the owner, not to exceed 10 percent of the excess funds in project accounts, to be released after completion of the rehabilitation required by the Restructuring Plan.

§ 401.480 Sale or transfer of project.

(a) *May the owner request a Restructuring Plan that includes a sale or transfer of the property?* The owner may request a Restructuring Plan that includes a condition that the property be sold or transferred to a purchaser acceptable to HUD in a reasonable period needed to consummate the transaction. The failure to consummate a sale or transfer of the property requested under paragraph (a) of this section will neither adversely affect an owner's eligibility for a Restructuring Plan nor exempt the owner from the requirements of § 401.600. There are no priority purchaser requirements for a voluntary sale or transfer by an owner that is eligible for a Restructuring Plan.

(b) *When must the Restructuring Plan include a sale or transfer of the property?* If the owner is determined ineligible pursuant to § 401.101 or § 401.403, the Restructuring Plan must include a condition that the owner sell or transfer the property to a purchaser acceptable to HUD in accordance with paragraph (c) of this section.

(c) *Owner's notice of intent to sell or transfer.* (1) The owner must provide notice to the PAE affirming the owner's intent to sell or transfer the property. This notice must be received by the PAE no later than 30 days after a notice of rejection under § 401.101 or § 401.403 has become a final determination under subpart F of this part.

(2) The owner must cooperate in selling or transferring the property. Failure to do so will result in the PAE's determination to reject the owner's request for a Restructuring Plan. The owner must distribute and publish, in an appropriate publication, a notice to potential purchasers that describes the property, proposed terms of sale, and procedures for submitting an purchase offer. The notice in form and substance must be acceptable to HUD, and must inform potential offerors of a preference for priority purchasers.

(3) During a period to be determined by HUD that begins when the owner gives notice of intent to sell or transfer, an owner may accept an offer only from a priority purchaser.

(4) No sale or transfer to a non-priority purchaser will be approved without evidence of tenant support.

(d) *Informing PAE; approval required.* The owner must inform the PAE of any offer to purchase the property and the owner must advise the PAE of the substance and on-going status of the owner's discussions with any prospective purchaser. The owner's acceptance of the offer must be subject to PAE approval, and HUD approval of the Restructuring Plan.

§ 401.481 Subsidy layering limitations on HUD funds.

(a) *PAE subsidy layering certification required for Restructuring Plan.* The PAE must certify to HUD that any Restructuring Plan for which it submits a proposed Restructuring Commitment meets the requirements of either paragraph (d) or (e) of this section.

(b) *Purpose of subsidy layering certification.* The purpose of the subsidy layering certification is to ensure that any HUD assistance provided to the owner of a project pursuant to a Restructuring Plan is no more than is necessary to permit the project to continue to house tenants with an income mix comparable to the income

mix of the project before the Restructuring Plan is implemented, after taking into account other Government assistance described in section 102(b)(1) of the Department of Housing and Urban Development Reform Act of 1989 (42 U.S.C. 3545(b)(1)). This section does not limit a PAE from presenting for approval a Restructuring Plan that includes project reconfiguration (*e.g.,* conversion of efficiency units to one-bedroom units) where necessary to meet the needs of the community, provided the conditions of § 401.452 are also met.

(c) *Relationship to section 102(d) of HUD Reform Act.* HUD is not required to perform a separate subsidy layering analysis under section 102(d) of the Department of Housing and Urban Development Reform Act of 1989 (42 U.S.C. 3545(d)), section 911 of the Housing and Community Development Act of 1992 (42 U.S.C. 3545 note), or § 4.13 of this title for any HUD assistance that is included in the Restructuring Plan. HUD will adopt the PAE certification under this section if a HUD certification otherwise would be required under section 102(d).

(d) *Certification under existing HUD guidelines.* If the PAE has delegated authority from HUD to make section 102(d) subsidy layering certifications in accordance with section 911 of the Housing and Community Development Act of 1992, the PAE may comply with this section by using a procedure substantially similar to the procedure described in the Administrative Guidelines published on December 15, 1994 (59 FR 64748), or any subsequent procedure adopted by HUD to implement section 911.

(e) *Other procedures.* If the PAE does not have the delegated authority described in paragraph (d) of this section, the PAE must submit to HUD for approval proposed procedures for making the subsidy layering certification under this section. Any procedures must conform to the procedures described in paragraph (d) of this section to the extent feasible and appropriate.

§ 401.500 Required notices to third parties and meeting with third parties.

(a) *General.* The PAE must solicit, and document the consideration of, tenant and local community comments. As a minimum, the notices described in paragraphs (b), (c) and (f) of this section, in form and substance acceptable to HUD, must be provided. The PAE may require the owner to give the notices if permitted by HUD.

(b) *Notice of intent to restructure and consultation meeting.* (1) This notice must include at a minimum:

(i) The project, including its name and FHA Project Number;

(ii) The responsible PAE and contact person, including the address and telephone number;

(iii) The owner's notice of intent to restructure through the Mark-to-Market Program; and

(iv) The date of expiration of the project-based assistance.

(2) This notice must state how comments may be provided to the PAE regarding any of the following: the physical condition of the property, whether the rental assistance should be tenant-based or project-based, any proposed sale or transfer of the property, and other matters regarding the property and its management. The notice must establish the date, time, and place for a public meeting to be held no sooner than 20 days and no later than 40 days following the date of this notice. The public may provide written comments up to the date of the meeting.

(c) *Access to Restructuring Plan.* (1) The PAE must make the Restructuring Plan available to the parties identified in § 401.501 at least 20 days before the PAE submits the Restructuring Plan to HUD (subject to any Federal, State, or local laws restricting access to any information in the Plan or related documents).

(2) As soon as the PAE determines that the Restructuring Plan is substantively complete and ready for submission to HUD, notice of the following must be provided:

(i) The location of the Plan for inspection and copying; and

(ii) The date, time, and place of a public meeting to be held at least 10 days before the PAE submits the Plan to HUD.

(3) When the PAE gives notice under this section, it must make the Plan available during normal business hours at the management office of the project, or if there is no such office, at another location specified by the PAE that is convenient to the tenants.

(d) *Meeting to discuss the Restructuring Plan.* After the PAE has given notice under this section and at least 10 days before the PAE submits the Plan to HUD, the PAE must conduct a public meeting to obtain comments on the substantively completed Plan. The PAE must accept written comments through the date of the meeting.

(e) *Disposition of comments.* The PAE must document and provide to HUD with the Restructuring Plan a summary of the disposition of all public comments.

(f) *Notice of completion of Restructuring Plan.* (1) Within 10 days after the owner executes the Restructuring Commitment, notice must be provided that describes the completed Restructuring Plan and Restructuring Commitment. The PAE must make the completed Restructuring Plan and Restructuring Commitment available during normal business hours to the public at a place described in paragraph (c)(3) of this section, subject to Federal, State, or local laws restricting access to any information in any of these documents.

(2) Within 10 days after the PAE determines that the Restructuring Plan will not move forward for any reason, notice must be provided that describes the reasons for the failure to move forward and the availability of tenant-based assistance to tenants under § 401.602(c) if project-based assistance is not renewed.

§ 401.501 Delivery of notices and recipients of notices.

(a) *Whom must the owner or PAE notify?* The PAE must notify, or ensure that the owner notifies, each tenant and any tenant organization for the project, and post a notice in the project, for all notices required by §§ 401.500 and 401.502.

(b) *Whom must the PAE notify?* The PAE must notify:

(1) The Chief Executive Officer of the unit of local government and the Executive Director of the Public Housing Authority with jurisdiction over the project location;

(2) The recipient of any Outreach and Training Grant (OTAG); or Intermediary Technical Assistance Grant (ITAG) for the project location; and

(3) Other appropriate neighborhood representatives and other affected parties.

§ 401.502 Notice requirement when debt restructuring will not occur.

(a) *PAE responsibility.* If an owner of an eligible project requests a renewal of a section 8 contract without a Restructuring Plan under § 402.4, HUD or the PAE must notify, or ensure that the owner notifies, all parties identified in § 401.501 of the request and of:

(1) The availability (as provided in § 401.500(c)(3) of the following information:

(i) The owner evaluation of physical condition (OEPC) required by § 402.6(a)(3);

(ii) The comparable market rent analysis required by § 402.6(a)(2), but without addresses (or other specific information indicating location) for comparable properties; and

(iii) The items identified in § 400.500(b)(1)(i), (ii) and (iv); and

(2) A procedure for submitting public comments regarding this information.

(b) *Expense and profit/loss information.* The PAE should remove project expense, property valuation, and profit and loss information before disclosing any information obtained by the PAE directly from an owner or project manager, unless the owner has given written consent to disclosure with that information included.

(c) *Consideration of comments.* The PAE must consider written public comments on the information listed in paragraph (a) of this section, if the comments are submitted within 30 days after giving notice under paragraph (a), and document the consideration for HUD. No public meeting is required.

§ 401.503 Access to information.

(a) *PAE responsibilities.* The PAE must provide to parties entitled to notice under § 401.501 access to information obtained by the PAE about the project and its management if the PAE determines that such information is reasonably likely to contribute to effective participation by those parties in the restructuring process, or if HUD requires the PAE to provide access to the information. The PAE is not required to make public any information received from the owner or manager that the PAE reasonably characterizes as confidential or proprietary information that would not ordinarily be made public, except:

(1) Owner evaluation of physical condition (OEPC), or a comprehensive needs assessment (CA) if used instead of an OEPC, as required by § 401.450;

(2) Owner-prepared 1-year project rent analysis; and

(3) As directed by HUD.

(b) *Information on expenses and profit/loss.* Before disclosing any information, the PAE must remove any information obtained by the PAE directly from the owner or project manager that is related to project expenses, property valuation, or profit and loss, unless the owner gives written consent to disclosure with that information.

Subpart D—Implementation of the Restructuring Plan After Closing

§ 401.550 Monitoring and compliance agreements.

(a) *Compliance agreements.* The PAE must ensure long-term compliance by the owner with MAHRA, this part, and the Restructuring Plan. As part of this responsibility, the PAE must require each owner with an approved Restructuring Plan to execute and record a Use Agreement that satisfies the requirements of § 401.408. All provisions of this subpart apply as long as the Use Agreement is in effect.

(b) *Periodic monitoring and inspection.* At least once a year, a PAE must review the status of each project for which it developed an approved Restructuring Plan. Monitoring must include on-site inspections. HUD will accept an inspection by a PAE that complies with subpart G of part 5 of this title in lieu of an inspection required by any other party under that subpart.

(c) *HUD acting instead of PAE.* HUD will perform, or contract with other parties to perform, the PAE's functions under this section if:

(1) The project is subject to a PRA with a PAE that is not qualified to be a section 8 contract administrator; or

(2) The project is not currently subject to a PRA.

(d) *Regulatory agreement.* As long as the Secretary is the holder of a second mortgage or an additional mortgage under § 401.461, HUD will regulate the operations of the mortgagor through a regulatory agreement providing terms, conditions, and standards established by HUD, which may be in addition to any regulatory agreement otherwise required in connection with mortgage insurance programs. The regulatory agreement must contain remedies for breach, including monetary damages in the event of non-compliance.

§ 401.552 Servicing of second mortgage.

HUD or its designee will be responsible for servicing the second mortgage, including determining the amounts receivable by the owner under § 401.461(b)(3)(ii)(A). HUD may designate the PAE, with the PAE's consent, as servicer for the second mortgage.

§ 401.554 Contract renewal and administration.

HUD will offer to renew or extend section 8 contracts as provided in each Restructuring Plan, subject to the availability of appropriations and subject to the renewal authority available at the time of each contract expiration (§ 402.5 of this chapter or another appropriate renewal authority). The offer will be made by HUD directly or through a PAE that has contracted with HUD to be a contract administrator for such contracts. HUD will offer to any PAE that is qualified to be the section 8 contract administrator the opportunity to serve as the section 8 contract administrator for a project restructured under a Restructuring Plan developed by the PAE under the Mark-to-Market Program. Qualifications will be determined under both statutory requirements and requirements issued by the appropriate office within HUD, depending on the type of section 8 assistance that is provided.

§ 401.556 Leasing units to voucher holders.

A Restructuring Plan must prohibit any refusal of the owner to lease a unit solely because of the status of the prospective tenant as a section 8 voucher holder.

§ 401.558 Physical condition standards.

The Restructuring Plan must require the owner to maintain the project, in a decent and safe condition that meets the applicable standards under this section. As long as project-based assistance is provided, the applicable standards are the physical conditions standards for HUD housing in § 5.703 of this title. At any other time, the applicable standards are the local housing codes or codes adopted by the public housing agency if such codes meet or exceed the standards in § 5.703 of this title and do not severely restrict housing choice or, if there are no such local housing codes or codes adopted by the public housing agency, the standards in § 5.703 of this title will apply. In addition, any unit in which the tenant receives tenant-based assistance must comply with the housing quality standards of the section 8 tenant-based programs.

§ 401.560 Property management standards.

(a) *General.* Each PAE is required by section 518 of MAHRA to establish management standards consistent with industry standards and HUD guidelines. The management standards must be included or referenced in the Restructuring Plan.

(b) *HUD guidelines.* At a minimum, the PAE's management standards must require the project management to:

(1) Protect the physical integrity of the property over the long term through preventative maintenance, repair, or replacement;

(2) Ensure that the building and grounds are routinely cleaned;

(3) Maintain good relations with the tenants;

(4) Protect the financial integrity of the project by operating the property with competitive and reasonable costs and maintaining appropriate property and liability insurance at all times;

(5) Take all necessary measures to ensure the tenants' physical safety; and

(6) Comply with other provisions that are required by HUD, including termination of the management agent for cause.

(c) *Conflicts of interest.* The PAE management standards must also conform to any guidelines established

by HUD, and industry standards, governing conflicts of interest between owners, managers, and contractors.

Subpart E—Section 8 Requirements for Restructured Projects

§ 401.595 Contract and regulatory provisions.

The provisions of chapter VIII of this title will apply to a renewal of section 8 project-based assistance contract under this part only to the extent, if any, provided in the contract. Part 983 of this title will not apply. The term of the initial and subsequent contract renewals under this part will be determined by the appropriate HUD official.

§ 401.600 Will a section 8 contract be extended if it would expire while an owner's request for a Restructuring Plan is pending?

If a section 8 contract for an eligible project would expire before a Restructuring Plan is implemented, the contract may be extended at rents not exceeding current rents for up to the earlier of 1 year or closing on the Restructuring Plan under § 401.407. HUD may terminate the contract earlier if the PAE or HUD determines that an owner is not cooperative under § 401.402 or if an owner's request is rejected under § 401.403 or § 401.405. Any extension of the contract beyond 1 year for a pending Plan must be at comparable market rents or exception rents. An extension at comparable market rents or exception rents under this section will not affect a project's eligibility for the Mark-to-Market Program once it has been initially established under this part.

§ 401.601 [Reserved]

§ 401.602 Tenant protections if an expiring contract is not renewed.

(a) *Required notices.* (1)(i) The owner of an eligible project who has requested a Restructuring Plan and contract renewal must provide a 12-month notice as provided in section 514(d) of MAHRA if the owner later decides not to extend or renew an expiring contract (except due to a rejection under §§ 401.101. 401.403, 401.405, or 401.451. If the owner gives such 12-month notice, the owner is not required to give a separate notice under section 8(c)(8) of the United States Housing Act of 1937.

(ii) An owner who gives the 12-month notice required by paragraph (a)(1)(i) of this section and who determines not to renew a contract must give additional notice not less than 120 days before the contract expiration.

(2) The owner of an eligible project who has not requested a Restructuring Plan, or an owner who requested a Restructuring Plan but who has been rejected under §§ 401.101, 401.403, 401.405, or 401.451, must provide 12 month's advance notice under section 8(c)(8)(A) of the United States Housing Act of 1937 (or notice as otherwise provided in section 8(c)(8)(C) of such Act), unless project-based assistance is renewed under § 402.4.

(3) Notices required by this paragraph must be provided to tenants and to HUD or the contract administrator. HUD will prescribe the form of notices under this paragraph, to the extent that the form is not prescribed by section 8(c)(8) of the United States Housing Act of 1937.

(b) *If owner does not give notice.* If an owner described in paragraph (a)(1) or (a)(2) of this section does not give timely notice of non-renewal or termination, the owner must permit the tenants in assisted units to remain in their units for the required notice period with no increase in the tenant portion of their rent, and with no eviction due to inability to collect an increased tenant portion of rent.

(c) *Availability of tenant-based assistance.* (1) Subject to the availability of amounts provided in advance in appropriations and the eligibility requirements of the tenant-based assistance program regulations, HUD will make tenant-based assistance available under the following circumstances:

(i) If the owner of an eligible project does not extend or renew the project-based assistance, any eligible tenant residing in a unit assisted under the expiring contract on the date of expiration will be eligible to receive assistance on the later of the date of expiration or the date the owner's obligations under paragraph (b) of this section expire; and

(ii) If a request for a Restructuring Plan is rejected under § 401.101, § 401.403, § 401.405, or 401.451, and project-based assistance is not otherwise renewed, any eligible tenant who is a low-income family or who resides in a project-based assisted unit on the date of Plan rejection will be eligible to receive assistance on the later of the date the Restructuring Plan is rejected, or the date the owner's obligations under paragraph (b) of this section expire.

(2) If the tenant was assisted under the expiring contract, assistance under this paragraph will be in the form of enhanced vouchers as provided in section 8(t) of the United States Housing Act of 1937.

§ 401.605 Project-based assistance provisions.

The project-based assistance rents for a restructured project must be the restructured rents determined under the Restructuring Plan in accordance with §§ 401.410 or 401.411.

§ 401.606 Tenant-based assistance provisions.

If the Restructuring Plan provides for tenant-based assistance, each assisted family residing in a unit assisted under the expiring project-based assistance contract when the contract terminates will be offered tenant-based assistance if the family meets the eligibility requirements under part 982. Whenever permitted by section 515(c)(4) of MAHRA, the tenant-based assistance will be in the form of enhanced vouchers as provided in section 8(t) of the United States Housing Act of 1937.

Subpart F—Owner Dispute of Rejection and Administrative Appeal

§ 401.645 How does the owner dispute a notice of rejection?

(a) *Notice of rejection.* HUD will notify the owner of the reasons for a rejection under §§ 401.101, 401.402, 401.403, 401.405, 401.451, or § 402.7 of this chapter. An owner will have 30 days from receipt of this notice to provide written objections or to cure the underlying basis for the objections. If the owner does not submit written objections or cure the underlying basis for the objections during that period, the decision will become a final determination under section 516(c) of MAHRA and is not subject to judicial review.

(b) *Final decision after objection; right to administrative review.* If an owner submits written objections or asserts that the underlying basis for the objections is cured, after consideration of the matter HUD will send the owner a final decision affirming, modifying, or reversing the rejection and setting forth the rationale for the final decision.

§ 401.650 When may the owner make an administrative appeal of a final decision under this subpart?

The owner has a right to make an administrative appeal of the following:

(a) A final decision by HUD under § 401.645(b);

(b) A decision by HUD and the PAE to offer a proposed Restructuring Commitment that the owner does not execute; and

(c) A decision by HUD to accelerate the second mortgage under § 401.461(b)(4), to the extent provided that section.

§ 401.651 Appeal procedures.

(a) *How to appeal.* An owner may submit a written appeal to HUD, within 10 days of receipt of written notice of the decision described in § 401.650, contesting the decision and requesting a conference with HUD. At the conference, the owner may submit (in person, in writing, or through a representative) its reasons for appealing the decision. The HUD or PAE official who issued the decision under appeal may participate in the conference and submit (in person, in writing, or through a representative) the basis for the decision.

(b) *Written decision.* Within 20 days after the conference, or 20 days after any agreed-upon extension of time for submission of additional materials by or on behalf of the owner, HUD will advise the owner in writing of the decision to terminate, modify, or affirm the original decision.

(c) *Who is responsible for reviewing appeals?* HUD will designate an official to review any appeal, conduct the conference, and issue the written decision. The official designated must be one who was neither directly involved in, nor reports to another directly involved in, making the decision being appealed.

§ 401.652 No judicial review.

The reviewing official's decision under § 401.651 is a final determination for purposes of section 516(c) of MAHRA and is not subject to judicial review.

PART 402—PROJECT-BASED SECTION 8 CONTRACT RENEWAL WITHOUT RESTRUCTURING (UNDER SECTION 524(a) OF MAHRA)

3. The authority citation for part 402 continues to read as follows:

Authority: 42 U.S.C. 1437f note and 3535(d).

4. Section 402.1 is revised to read as follows:

§ 402.1 What is the purpose of part 402?

This part sets out the terms and conditions under which HUD will renew project-based section 8 contracts under the authority provided in section 524(a)(1) or (2) of MAHRA. This part permits renewal notwithstanding part 24 of this title, but subject to section 516 of MAHRA (see § 402.7).

5. Section 402.4 is revised to read as follows:

§ 402.4 Contract renewals under section 524(a)(1) of MAHRA.

(a) *Initial renewal.* (1) HUD may renew any expiring section 8 project-based assistance contract at initial rents that do not exceed comparable market rents.

(2)(i) If HUD or a Participating Administrative Entity (PAE) determines that renewal of an expiring contract under this section for an eligible project would be sufficient to maintain both adequate debt service coverage on the HUD-insured or HUD-held mortgage and necessary replacement reserves to ensure the long-term physical integrity of the project, taking into account any comments received under § 401.502(c) of this chapter, HUD will renew the contract under this section without developing a Restructuring Plan, subject to § 402.7.

(ii) If HUD or the PAE determines that paragraph (a)(2)(i) of this section does not apply for an eligible project, HUD or the PAE may require a Restructuring Plan before the owner's request for renewal of an expiring section 8 contract will be given further consideration. If HUD or the PAE determines that the project's continued operation without a Restructuring Plan is not feasible and the owner does not cooperate in the development of an acceptable Restructuring Plan, HUD will pursue whatever administrative actions it considers necessary.

(b) [Reserved].

6. Section 402.6 is amended by revising paragraph (a)(3) to read as follows:

§ 402.6 What actions must an owner take to request section 8 contract renewal under this part?

(a) * * *

(3) If an owner of a project eligible for restructuring under part 401 is seeking contract renewal under § 402.4, the most recent required fiscal year audited financial statement for the project and an owner's evaluation of physical condition as provided in § 401.450 of this chapter, and such other documents as HUD or the PAE may require.

* * * * *

Dated: March 13, 2000.

Ira Peppercorn,

Director, Office of Multifamily Housing Assistance Restructuring.

[FR Doc. 00–6728 Filed 3–21–00; 8:45 am]

BILLING CODE 4210–01–P

Federal Register

Wednesday,
March 22, 2000

Part IV

Securities and Exchange Commission

17 CFR Part 230 et al.
Disclosure of Mutual Fund After-Tax Returns; Proposed Rule

SECURITIES AND EXCHANGE COMMISSION

17 CFR Parts 230, 239, 270, and 274

[Release Nos. 33–7809; 34–42528; IC–24339; File No. S7–09–00]

RIN: 3235–AH77

Disclosure of Mutual Fund After-Tax Returns

AGENCY: Securities and Exchange Commission

ACTION: Proposed rule

SUMMARY: The Securities and Exchange Commission is proposing rule and form amendments under the Securities Act of 1933 and the Investment Company Act of 1940 to improve disclosure to investors of the effect of taxes on the performance of open-end management investment companies (''mutual funds'' or ''funds''). Under the proposed amendments, mutual funds would be required to disclose after-tax returns based on standardized formulas comparable to the formula currently used to calculate before-tax average annual total returns. The proposals also would require funds that include after-tax returns in advertisements and other sales materials to include standardized after-tax returns.

DATES: Comments must be received on or before June 30, 2000.

ADDRESSES: Comments should be submitted in triplicate to Jonathan G. Katz, Secretary, Securities and Exchange Commission, 450 5th Street, N.W., Washington, D.C. 20549–0609. Comments also may be submitted electronically at the following E-mail address: rule-comments@sec.gov. All comment letters should refer to File No. S7–09–00; this file number should be included on the subject line if E-mail is used. All comments received will be available for public inspection and copying in the Commission's Public Reference Room, 450 5th Street, N.W., Washington, D.C. 20549–0102. Electronically submitted comment letters will be posted on the Commission's Internet site (http://www.sec.gov).

FOR FURTHER INFORMATION CONTACT: Maura S. McNulty, Senior Counsel, Martha B. Peterson, Special Counsel, or Kimberly Dopkin Rasevic, Assistant Director, (202) 942–0721, Office of Disclosure Regulation, Division of Investment Management, Securities and Exchange Commission, 450 5th Street, N.W., Washington, D.C. 20549–0506.

SUPPLEMENTARY INFORMATION: The Securities and Exchange Commission (''Commission'') is proposing for comment amendments to Form N–1A [17 CFR 239.15A and 274.11A], the registration form used by mutual funds to register under the Investment Company Act of 1940 [15 U.S.C. 80a–1 *et seq.*] (''Investment Company Act'') and to offer their shares under the Securities Act of 1933 [15 U.S.C. 77a *et seq.*] (''Securities Act''). The Commission also is proposing amendments to rule 482 under the Securities Act [17 CFR 230.482] and rule 34b–1 under the Investment Company Act [17 CFR 270.34b–1].

Table of Contents

I. Introduction
II. Discussion
A. Requirement to Disclose After-Tax Return
B. Location of Required Disclosure
C. Format of Disclosure
D. Exemptions from the Disclosure Requirement
E. Advertisements and Other Sales Literature
F. Formulas for Computing After-Tax Return
1. Tax Bracket
2. Historical versus Current Tax Rates
3. Calendar versus Fiscal Year Measurement Period
4. State and Local Tax Liability
5. Federal Alternative Minimum Tax and Phaseout Adjustments
6. Timing and Method of Tax Payment
7. Tax Treatment of Distributions
8. Capital Gains and Losses Upon a Sale of Fund Shares
G. Narrative Disclosure
H. Alternatives to Disclosure of After-Tax Return
I. Technical and Conforming Amendments
J. Compliance Date
III. General Request For Comments
IV. Cost/Benefit Analysis
V. Summary Of Initial Regulatory Flexibility Analysis
VI. Paperwork Reduction Act
VII. Statutory Authority
Text Of Proposed Rules And Forms

I. Introduction

Taxes are one of the most significant costs of investing in mutual funds through taxable accounts. In 1998, mutual funds distributed approximately $166 billion in capital gains and $134 billion in taxable dividends.[1] Shareholders investing in stock and bond funds paid an estimated $34 billion in taxes in 1997 on distributions by their funds.[2] Recent estimates suggest that more than two and one-half percentage points of the average stock fund's total return is lost each year to taxes.[3] Moreover, in the last five years, it is estimated that investors in diversified U.S. stock funds surrendered an average of 15 percent of their annual gains to taxes.[4]

Despite the tax dollars at stake, many investors lack a clear understanding of the impact of taxes on their mutual fund investments.[5] Generally, a mutual fund shareholder is taxed when he or she receives income or capital gains distributions from the fund and when the shareholder redeems fund shares at a gain.[6] The tax consequences of distributions are a particular source of surprise to many investors when they discover that they can owe substantial taxes on their mutual fund investments that appear to be unrelated to the performance of the fund. Even if the value of a fund has declined during the year, a shareholder can owe taxes on capital gains distributions if the portfolio manager sold some of the

[1] Investment Company Institute (''ICI''), MUTUAL FUND FACT BOOK 56 (1999) (''1999 MUTUAL FUND FACT BOOK'') (distributions of taxable dividends included $81.9 billion on equity, hybrid, and bond funds and $52.1 billion on money market funds).

[2] Liberty Funds Distributor, *Mutual Fund ''Tax Pain Index'' Rises Again Despite Capital Gains Rate Cut* (visited Feb. 1, 2000) <http://www.libertyfunds.com/liberty/lf/scripts/inTheNews.jsp?BV__SessionID=@@@@0115467702.0949422874@@@@&BV__EngineID=calglgclfhhbfdmckgcfjicil. 0> (estimate of the tax burden based on net capital gains realized on mutual funds other than money market funds, and net investment income on equity, bond, and income funds).

[3] KPMG Peat Marwick LLP, An Educational Analysis of Tax-Managed Mutual Funds and the Taxable Investor (''KPMG Study''), at 14.

[4] Jonathan Clements, *Fund Distributions are a Taxing Problem; How the Tax Man Dines on Your Funds,* THE WALL STREET JOURNAL, Aug. 31, 1999, at C1.

[5] In a recent telephone survey, 1,000 mutual fund investors were asked about their tax knowledge. Eighty-five percent of respondents claimed taxes play an important role in investment decisions, but only thirty-three percent felt that they were very knowledgeable about the tax implications of investing. Eighty-two percent were unable to identify the maximum rate for long-term capital gains. The Dreyfus Corporation, *Dreyfus' 1999 Tax Informed Investing Study* (visited Jan. 14, 2000) <http://www.dreyfus.com/>. In another survey, 1,555 mutual fund investors were asked a variety of questions to test their knowledge about mutual funds. Only 60 percent correctly answered a question asking them to identify factors that may influence after-tax returns. Brill's Mutual Funds Interactive, *Humberto Cruz: Take the Investor Literacy Test* (visited Jan. 31, 2000) <http://www.fundsinteractive.com/features/crz07991.html>.

[6] I.R.C. 61(a)(3) and (7) (providing that an individual's gross income includes dividends and gains derived from dealings in property); I.R.C. 852(b)(3)(8) (capital gain dividend from a mutual fund treated as gain from sale or exchange of capital asset held for more than one year); I.R.C. 1001 (gain from sale or other disposition of property is excess of amount realized over adjusted basis, and loss is excess of the adjusted basis over amount realized). *See* IRS Publication 564, *Mutual Fund Distributions* (1999), at 2–4 (explaining tax treatment of distributions of income and capital gains by mutual funds to their shareholders).

fund's underlying portfolio securities at a gain.[7]

The tax impact of mutual funds on investors can vary significantly from fund to fund. For example, the amount and character of a fund's taxable distributions are affected by its investment strategies, including the extent of a fund's investments in securities that generate dividend and other current income, the rate of portfolio turnover and the extent to which portfolio trading results in realized gains, and the degree to which portfolio losses are used to offset realized gains. One recent study reported that the annual impact of taxes on the performance of stock funds varied from zero, for the most tax-efficient funds, to 5.6 percentage points, for the least tax-efficient.[8] While the tax-efficiency of a mutual fund is of little consequence to investors in 401(k) plans or other tax-deferred vehicles, it can be very important to an investor in a taxable account, particularly a long-term investor whose tax position may be significantly enhanced by minimizing current distributions of income and capital gains.

Recently, there have been increasing calls for improvement in the disclosure of the tax consequences of mutual fund investments. Mutual funds, as well as third party providers that furnish information to mutual fund shareholders, are responding to this growing investor demand by providing after-tax returns, calculators that investors can use to compute after-tax returns, and other tax information.[9] In addition, several fund groups have created new funds promoting the use of more tax-efficient portfolio management strategies.[10] At the same time, a bill has been introduced in Congress that would require the Commission to revise its regulations to require improved disclosure of mutual fund after-tax returns.[11] Many press commenters also have highlighted the need for improvements in mutual fund tax disclosure.[12]

Currently, the Commission requires mutual funds to disclose significant information about taxes to investors. In its prospectus, a mutual fund is required to disclose (i) the tax consequences of buying, holding, exchanging, and selling fund shares, including the tax consequences of fund distributions; and (ii) whether the fund may engage in active and frequent portfolio trading to achieve its principal investment strategies, and, if so, the tax consequences of increased portfolio turnover and how this may affect fund performance.[13] A fund also must disclose in its prospectus and annual report the portfolio turnover rate and dividends and capital gains distributions per share for each of the last five fiscal years.[14] While we believe this disclosure is useful, we are persuaded that funds can more effectively communicate to investors the tax consequences of investing. We are therefore proposing for public comment amendments to our rules and to Form N–1A, the registration form for mutual funds, that would require disclosure of standardized mutual fund after-tax returns.

This is the latest Commission action in our continuing effort to improve the quality of mutual fund disclosure in order to help investors make better-informed decisions. In 1998, for example, we adopted comprehensive amendments to Form N–1A in order to focus the disclosure in a fund's prospectus on essential information that will assist investors in deciding whether to invest in the fund.[15] We also permitted the use of a new short-form document, the fund ''profile,'' which summarizes key information about a mutual fund.[16]

Over the years, we have implemented a number of initiatives to improve fund disclosure of costs and performance. We standardized before-tax fund performance in advertisements and sales literature in order to prevent misleading performance claims by funds and to permit investors to make meaningful comparisons among funds.[17] We introduced a uniform fee table in the prospectus [18] and required that a fund discuss its performance over the past year in its prospectus or annual report to shareholders.[19]

More recently, we have increased our efforts to educate investors about mutual fund costs and how those costs

[7] This is attributable, in part, to the fact that a mutual fund generally must distribute substantially all of its net investment income and realized capital gains to its shareholders in order to qualify for favorable tax treatment as a ''regulated investment company'' (''RIC''). I.R.C. 852 and 4982(b). As a RIC, a mutual fund is generally entitled to deduct dividends paid to shareholders, resulting in its shareholders being subject to only one level of taxation on the income and gains distributed to them. I.R.C. 851 (circumstances under which an investment company may be treated as a RIC) and 852(b)(2) (calculation of taxable income of a RIC).

See, e.g., Year-End Tax Tips, Bob Edwards (National Public Radio, Morning Edition radio broadcast, Dec. 28, 1999) (describing tax consequences of mutual fund distributions as a ''shock'' to investors).

[8] KPMG study, *supra* note 3, at 14 (reporting the impact of taxes on performance of 496 stock funds for the ten-year period ending December 31, 1997).

[9] For example, Eaton Vance Management and The Vanguard Group have recently announced plans to begin reporting after-tax returns to shareholders. *Eaton Vance to Disclose After-Tax Returns*, FUND ACTION, Dec. 20, 1999, Vol. X/No. 51, at 6; Access Vanguard, *Vanguard to Publish After-Tax Returns in Equity and Balanced Fund Reports (Oct. 11, 1999)* (visited Feb. 1, 2000) <http://www.vanguard.com/cgi-bin/pressroom/PRPrevious.html>. Fidelity Investments and Charles Schwab & Co. also have begun offering Internet tools that feature after-tax returns of funds offered in their fund supermarkets. Fidelity Investments, *Track After-Tax Fund Performance On-Line* (visited February 8, 2000) <http://personal300.fidelity.com/global/whatsnew/content/94689.html.tvsr> (after-tax returns for most equity funds sold through the fund supermarket); *Short Takes: Schwab Offering On-Line Research Access*, THE AMERICAN BANKER, Jan. 5, 2000, at 6 (after-tax returns for funds listed by Morningstar, Inc.).

Further, Morningstar, Inc., and *Forbes* report mutual fund after-tax returns. Morningstar, MUTUAL FUND 500 (1999 ed.); *Fund Survey,* FORBES, Feb. 7, 2000, at 166.

On-line tax calculators that calculate after-tax returns are also available. *Andrew Tobias' Mutual Fund Cost Calculator*, (visited Jan. 14, 2000) <http://www.personalfund.com/cgibon/calculate.cgi> (cost calculator includes a feature that calculates after-tax returns); Access Vanguard, *After-Tax Returns Calculator* (visited Jan. 19, 2000) <http://majestic3.vanguard.com/FP/DA/0.1.vgi__FundAfterTaxSim/ 212820070619150300?AFTER__TAX __CALC=SIMPLE>.

[10] The many fund groups offering funds labeled as ''tax-managed'' or ''tax-efficient'' include American Century, Eaton Vance, Liberty Funds, Paine Webber, Prudential, T. Rowe Price, and Voyager. Morningstar, Inc., currently tracks 42 tax-managed funds, as compared to 12 such funds only three years ago. Morningstar.com, *Tax-Managed Funds Keep Uncle Sam at Bay* (visited Feb. 23, 2000) <http://news.morningstar.com/news/ms/taxingissues/000125taxes.html>.

[11] The Mutual Fund Tax Awareness Act of 1999, H.R. 1089, 106th Cong., 1st Sess. (1999) (introduced by Congressman Paul Gillmor). *See also* H.R. 1089: The Mutual Fund Tax Awareness Act of 1999: Hearings Before the Subcomm. on Finance and Hazardous Materials of the House Comm. on Commerce, 106th Cong., 1st Sess. (Oct. 29, 1999) (Statement of the U.S. Securities and Exchange Commission Concerning Disclosure of the Tax Consequences of Mutual Fund Investments and Charitable Contributions).

[12] *See, e.g.*, Karen Damato, *Funds' Tally of IRS Bite Can Be Tricky*, THE WALL STREET JOURNAL, Nov. 3, 1999, at C1; Paul J. Lim, *Your Money; Funds and 401(k)s; As Stock Market Returns Shrink, After-Tax Results Gain Importance*, LOS ANGELES TIMES, Oct. 17, 1999, at C3; Charles A. Jaffe, *Mutual Fund Gains Create Interesting Tax Issues Later*, THE KANSAS CITY STAR, Mar. 23, 1999, at D19.

[13] Item 7(e) of Form N–1A; Instruction 7 to Item 4 of Form N–1A.

[14] Items 9(a) and 22(b)(2) of Form N–1A. These items also require funds to show net realized and unrealized gain or loss on investments on a per share basis for each of the fund's last five fiscal years.

[15] Investment Company Act Release No. 23064 (Mar. 13, 1998) [63 FR 13916 (Mar. 23, 1998)] (''Form N–1A Adopting Release''), at 13917.

[16] Investment Company Act Release No. 23065 (Mar. 13, 1998) [63 FR 13968 (Mar. 23, 1998)], at 13969.

[17] Investment Company Act Release No. 16245 (Feb. 2, 1988) [53 FR 3868 (Feb. 10, 1988)], at 3869.

[18] Item 3 of Form N–1A; Investment Company Act Release No. 16244 (Feb. 1, 1988) [53 FR 3192 (Feb. 4, 1988)].

[19] Item 5(a) of Form N–1A; Investment Company Act Release No. 19382 (Apr. 6, 1993) [58 FR 19050 (Apr. 12, 1993)] (''MDFP Release'').

affect performance.[20] Just last year, we introduced a ''Mutual Fund Cost Calculator'' to assist investors in determining how fund fees and charges affect their mutual fund returns.[21]

Today's proposal represents another significant step in these efforts. Taxes are one of the largest costs associated with a mutual fund investment, having a dramatic impact on the return an investor realizes from a fund. Our proposal will help investors to understand the magnitude of tax costs and compare the impact of taxes on the performance of different funds.

While the Commission recognizes that a significant amount of mutual fund assets are held through tax-deferred arrangements, such as 401(k) plans or individual retirement accounts (''IRAs''), approximately half of non-money market fund assets held by individuals are held in taxable accounts.[22] We are concerned that the millions of mutual fund investors who are subject to current taxation may not fully appreciate the impact of taxes on their fund investments because mutual funds are required to report their performance on a before-tax basis only.[23] Although performance is only one of many factors that an investor should consider in deciding whether to invest in a particular fund, many investors consider performance one of the most significant factors when selecting or evaluating a fund.[24] As a result, we believe it would be beneficial for funds to provide their after-tax performance in order to allow investors to make better-informed decisions.

Our proposals would require a fund to disclose its standardized after-tax returns for 1-, 5-, and 10-year periods. After-tax returns, which would accompany before-tax returns in fund prospectuses and annual reports, would be presented in two ways: (i) assuming the shareholder continued to hold his or her shares at the end of the period; and (ii) assuming the shareholder sold his or her shares at the end of the period, realizing taxable gain or loss on the sale. Although after-tax returns would not be required in fund advertisements and sales literature, any fund choosing to include after-tax returns in these materials would be required to include after-tax returns computed according to our standardized formula.

II. Discussion

A. Requirement to Disclose After-Tax Return

The Commission is proposing to require that mutual funds disclose after-tax return, a measure of a fund's performance adjusted to reflect taxes that would be paid by an investor in the fund. The proposal would require after-tax return information to be included in the risk/return summary of the prospectus and in Management's Discussion of Fund Performance (''MDFP''), which is typically contained in the annual report.[25] Funds would not be required to include after-tax returns in advertisements or other sales materials, although funds choosing to include after-tax returns in sales materials would be required to include after-tax returns computed according to a standardized formula.[26]

We considered whether, in lieu of requiring after-tax returns to be included in prospectuses and annual reports, we should simply require that funds voluntarily choosing to include after-tax returns in any materials (prospectus, annual report, or sales materials) also include after-tax returns computed according to a standardized formula. We concluded that this approach would not achieve our basic goal of providing investors in all mutual funds with better disclosure of the tax consequences of their investments. Permitting funds to choose whether to disclose after-tax returns could leave investors without the information required to compare after-tax returns for each fund they were considering and could leave funds with the latitude to disclose this information only when it is favorable.

Funds would calculate after-tax return by using a standardized formula similar to the formula presently used to calculate before-tax average annual total return.[27] The proposal would require funds to disclose after-tax return for 1-5-, and 10-year periods on both a ''pre-liquidation'' and ''post-liquidation'' basis. Pre-liquidation after-tax return assumes that the investor continues to hold fund shares at the end of the measurement period, and, as a result, reflects the effect of taxable distributions by a fund to its shareholders but not any taxable gain or loss that would be realized by a shareholder upon the sale of fund shares.[28] Post-liquidation after-tax return assumes that the investor sells his or her fund shares at the end of the measurement period, and, as a result, reflects the effect of both taxable distributions by a fund to its shareholders and any taxable gain or loss realized by the shareholder upon the sale of fund shares.[29] Pre-liquidation after-tax return reflects the tax effects on shareholders of the portfolio manager's purchases and sales of portfolio securities, while post-liquidation after-tax return also reflects the tax effects of a shareholder's individual decision to sell fund shares.

The Commission proposes to require the presentation of both pre-and post-liquidation after-tax returns in order to provide investors with a more complete understanding of the impact of taxes on

[20] *See, e.g.*, Securities and Exchange Commission, *Mutual Fund Investing: Look at More Than a Fund's Past Performance* (last modified Jan. 24, 2000) <http://www.sec.gov/consumer/mperf.htm>; Securities and Exchange Commission, *Invest Wisely: An Introduction To Mutual Funds* (last modified Oct. 21, 1996) <http://www.sec.gov/consumer/inws.htm>; ''Common Sense Investing in the 21st Century Marketplace,'' Remarks by Arthur Levitt, Chairman, SEC, Investors Town Meeting, Albuquerque, NM (Nov. 20, 1999); ''Financial Self-Defense: Tips From an SEC Insider,'' Remarks by Arthur Levitt, Boston Globe ''Moneymatters'' Personal Finance Conference, Boston, MA (Oct. 16, 1999); Transparency in the United States Debt Market and Mutual Fund Fees and Expenses: Hearings Before the Subcomm. on Finance and Hazardous Materials of the House Comm. on Commerce, 105th Cong., 2nd Sess. (Sept. 29, 1998) (Statement of Arthur Levitt, Chairman, U.S. Securities and Exchange Commission).

[21] Securities and Exchange Commission, *The SEC Mutual Fund Cost Calculator* (last modified December 6, 1999) <http://www.sec.gov/mfcc/mfcc-int.htm>.

[22] As of year end 1998, seventy-eight percent of mutual fund assets ($4.3 trillion) were held by individuals. 1999 MUTUAL FUND FACT BOOK, *supra* note 1, at 41. At the end of 1998, mutual fund assets held in retirement accounts stood at $1.9 trillion. 1999 MUTUAL FUND FACT BOOK, at 47. Mutual fund assets held by individuals in money market funds stood at $714 billion. 1999 MUTUAL FUND FACT BOOK, at 90, 100. Thus, 47 percent of non-money market fund assets held by individuals ($1.7 trillion) were held in taxable accounts.

An investor is not taxed on his or her investments in IRAs, 401(k) plans, and other qualified retirement plans until the investor receives a distribution from the plan. I.R.C. 401 *et seq. See* IRS Publication 564, *Mutual Fund Distributions* (1999), at 2 (explaining tax treatment of mutual funds held in retirement vehicles).

[23] *See* Items 2, 5, 9, and 22(b)(2) of Form N–1A.

[24] We recently posted a bulletin for mutual fund investors on our website, in which we cautioned investors to look beyond performance when evaluating mutual funds and to consider the costs relating to a mutual fund investment, including fees, expenses, and the impact of taxes on their investment. Securities and Exchange Commission, *Mutual Fund Investing: Look at More Than a Fund's Past Performance* (last modified Jan. 24, 2000) <http://www.sec.gov/consumer/mperf.htm/>.

See ICI, *Understanding Shareholders' Use of Information and Advisers* (Spring 1997), at 21 and 24. (Total return information was frequently considered by investors before a purchase, second only to the level of risk of the fund. Eighty-eight percent of fund investors surveyed said that they considered total return before their most recent purchase of a mutual fund. Eighty percent of fund owners surveyed reported that they followed a fund's rate of return at least four times per year.).

[25] Proposed Items 2(c)(2)(i) and (iii) and 5(b)(2) of Form N–1A.

[26] Proposed rules 482(e)(4), 482(e)(5)(iii), and 34b–1(b)(1)(iii)(B).

[27] *See* Item 21(b)(1) of Form N–1A.

[28] Proposed Item 21(b)(3) of Form N–1A.

[29] Proposed Item 21(b)(4) of Form N–1A.

a fund's performance. The relative value of these two measures of after-tax performance is the subject of ongoing debate among industry participants. Those who support the use of pre-liquidation after-tax return argue that pre-liquidation after-tax return provides the most relevant information for analyzing the tax impact of decisions by the portfolio manager.[30] Others argue that this measure of after-tax return, taken alone, tends to overstate the benefits of tax deferral on shareholder gains.[31]

We believe that pre-liquidation after-tax return is important because it provides information about the tax-efficiency of portfolio management decisions. We also believe, however, that it is important for shareholders, many of whom hold shares for a relatively brief period, to understand the full impact that taxes have on a mutual fund investment that has been sold.[32] Therefore, we are proposing to require funds to disclose both measures of after-tax return.

We are proposing that funds reflect the deduction of any fees and charges payable upon a sale of fund shares, such as sales charges or redemption fees, in post-liquidation after-tax returns but not in pre-liquidation after-tax returns.[33] This is consistent with the fact that post-liquidation after-tax returns assume a sale of fund shares by the investor, while pre-liquidation after-tax returns do not. Funds are currently required to disclose before-tax returns reflecting the deduction of any fees and charges payable upon a sale of fund shares.[34] These before-tax returns may usefully be compared to the post-liquidation after-tax return measure that we are proposing (because both types of returns reflect fees and charges payable upon a sale of fund shares), but they may not usefully be compared to the pre-liquidation after-tax return measure that we are proposing (which does not reflect fees and charges payable upon sale of fund shares).

We are therefore proposing to require that funds also disclose before-tax returns that do not reflect the deduction of fees and charges payable upon a sale of fund shares. This would provide investors with a before-tax return measure that can be compared with the pre-liquidation after-tax return measure that we are proposing.[35] In the alternative, we considered requiring that pre-liquidation after-tax return reflect the deduction of any fees and charges payable upon a sale of fund shares. Pre-liquidation after-tax return computed in this way could usefully be compared to the before-tax return that is currently required to be disclosed, but we were concerned that investors would be confused by a pre-liquidation after-tax return measure that assumed no sale of fund shares for purposes of computing tax consequences but nonetheless reflected fees and charges payable upon a sale of fund shares.

Commenters are requested to discuss whether we should require disclosure of after-tax returns. Is this information useful to, and understandable by, investors? Commenters are asked to address the relative merits of requiring disclosure of after-tax returns versus standardizing the computation of after-tax returns for funds that choose to disclose after-tax returns. Should disclosure be mandatory only for funds that hold themselves out as ''tax-managed'' or otherwise managed with a view to shareholder tax consequences?

Should we require disclosure of both pre-liquidation and post-liquidation after-tax returns or is disclosure of one of these measures sufficient? Commenters also are requested to discuss how we should address the issue of providing a useful comparison for pre-liquidation after-tax returns. Should we, as proposed, require the disclosure of before-tax return that does not reflect the deduction of any fees and charges payable upon a sale of fund shares? Or should we require funds to reflect the deduction of any fees and charges payable upon a sale of fund shares in pre-liquidation after-tax returns or take some other approach? Finally, commenters are asked to address whether we should require disclosure of after-tax returns for an index or a peer group of funds.

B. Location of Required Disclosure

The proposal would require mutual funds to disclose after-tax returns in the performance table contained in the risk/return summary of the prospectus and in the MDFP, which is typically contained in the annual report.[36] The proposal also would have the effect of requiring the inclusion of after-tax returns in any fund profile because a profile must include the prospectus risk/return summary.[37]

We are proposing to require that after-tax returns be included in the prospectus because, for the overwhelming majority of prospective investors who base their investment decision, in part, on past performance, after-tax returns can be useful in understanding past performance.[38] Including after-tax returns in the performance table of the risk/return summary would assist prospective investors in their investment decisions by making after-tax returns easy to find and easy to compare with before-tax returns, which are currently presented in this location.[39]

We are proposing to include after-tax returns in the MDFP because, for existing shareholders, after-tax returns are an important element to consider when evaluating fund performance.[40]

[30] *See* H.R. 1089: The Mutual Fund Tax Awareness Act of 1999: Hearings Before the Subcomm. on Finance and Hazardous Materials of the House Comm. on Commerce, 106th Cong., 1st Sess. (Oct. 29, 1999) (Statement of Joel M. Dickson, Principal, The Vanguard Group, Inc.) (stating that ''the primary advantage of the pre-liquidation calculation is that it isolates the effects on all shareholders of the taxes resulting from the portfolio manager's investment decisions'').

[31] *See* H.R. 1089: The Mutual Fund Tax Awareness Act of 1999: Hearings Before the Subcomm. on Finance and Hazardous Materials of the House Comm. on Commerce, 106th Cong., 1st Sess. (Oct. 29, 1999) (Statement of David B. Jones, Vice President, Fidelity Management & Research Co.) (stating that ''pre-liquidation returns risk fostering the impression that taxes can be deferred indefinitely, which is not the case for most investors; and tend to exaggerate the benefits of tax deferral'').

[32] A recent report estimates that over the past decade the average holding period of mutual funds has decreased from over 10 years to about 3 years. Steve Galbraith, Mary Medley, Sean Yu, The Apotheosis of Stuart—Lighting the Candle in U.S. Equities, Bernstein Research Call, Sanford C. Bernstein & Co., Jan. 10, 2000.

[33] Instruction 6 to proposed Item 21(b)(4) and Instruction 6 to proposed Item 21(b)(3) of Form N–1A.

[34] Instruction 4 to Item 21(b)(1) of Form N–1A.

[35] Proposed Items 2(c)(2)(iii)(A), 5(b)(2)(i), and 21(b)(1) of Form N–1A.

[36] Proposed Items 2(c)(2)(iii) and 5(b)(2) of Form N–1A.

[37] Rule 498(c)(2)(iii) under the Securities Act [17 CFR 230.498(c)(2)(iii)]. In addition, after-tax returns would be required in registration statements filed on Form N–14 [17 CFR 239.23], the registration form used by mutual funds to register securities to be issued in mergers and other business combinations under the Securities Act. *See* Items 5(a) and 6(a) of Form N–14 (cross-referencing Items 2 and 5 of Form N–1A).

[38] An estimated 88 percent of mutual fund shareholders considered the total return of the fund before their most recent fund purchase. Seventy-five percent of mutual fund shareholders considered the fund's performance relative to similar funds. ICI, UNDERSTANDING SHAREHOLDERS' USE OF INFORMATION AND ADVISERS (Spring 1997), at 21.

[39] Item 2(c)(2)(iii) of Form N–1A.

[40] Eighty percent of mutual fund shareholders monitor the performance of their fund holdings at least four times per year. ICI, UNDERSTANDING SHAREHOLDERS' USE OF INFORMATION AND ADVISERS (Spring 1997), at 24.

Form N–1A requires that the prospectus include the MDFP unless the information is included in the fund's latest annual report to shareholders and the fund provides a copy of the annual report, upon request and without charge, to each person to whom a prospectus is delivered. Item 5 of Form N–1A. A significant majority of funds currently include the MDFP in their annual reports to shareholders. The Commission has directed the Division of Investment Management to draft proposed amendments to fund periodic reporting requirements, and has asked that, in connection

Continued

The Commission added the MDFP requirement in response to investor concerns that mutual funds did not provide sufficient information to permit investors readily to evaluate fund investment results.[41] Including after-tax returns as part of the MDFP presentation will enhance its usefulness.

We have considered alternative locations for disclosure of after-tax returns, including: (i) The bar chart in the risk/return summary; (ii) the section of the prospectus describing the tax consequences to shareholders of buying, holding, exchanging, and selling fund shares; and (iii) the financial highlights table, which appears in both prospectuses and annual reports.[42] Each of these other locations, however, presents some drawbacks that resulted in our decision not to propose it as the location for after-tax returns.

The bar chart is prominently located in the prospectus, but it is intended to reflect fund volatility, not overall fund performance.[43] In addition, the performance shown in the bar chart does not reflect the deduction of sales loads or account fees and is presented for only a single class of a multiple class fund.[44] Although the tax section of the prospectus could provide a centralized location for tax information, inclusion of after-tax returns in this section would make them far less prominent than the before-tax returns included in the risk/return summary. The financial highlights table contains other tax information, such as dividends, capital gain distributions, and portfolio turnover rate.[45] On the other hand, the financial highlights table is not as prominently located in the prospectus as the risk/return summary. Further, the information presented in the financial highlights table is presented on a year-by-year basis, rather than on the average annual return basis over 1-, 5-, and 10-year periods that is used in computing standardized before-tax returns.

We also have considered vehicles other than the prospectus and annual reports for the disclosure of after-tax returns, including:

- Requiring disclosure of after-tax returns in the Statement of Additional Information (''SAI'');
- Providing funds with the option of disclosing after-tax returns on their Internet website in lieu of including after-tax returns in the prospectus or annual report; and
- Permitting funds to provide after-tax returns upon shareholder request only.

We determined not to propose any of these approaches because each would place the burden of obtaining after-tax return information on the investor, which could greatly reduce investors' receipt of this useful information.

Comment is requested on the appropriate location for disclosure of after-tax returns and how best to convey this information to both existing and prospective investors. Should this information be included in the prospectus, annual report, profile, or elsewhere? Commenters are asked to address the specific location in any document where this information should be included (*e.g.,* risk/return summary, MDFP) and the advantages and disadvantages of the suggested location. Commenters should address the locations discussed in this release and any other locations that they believe would be appropriate.

C. Format of Disclosure

We are proposing that before and after-tax returns be presented in a standardized tabular format as follows:[46]

AVERAGE ANNUAL TOTAL RETURNS

[For the periods ended ——]

	1 year	5 years	10 years
If You Continue to Hold Your Shares at End of Period:			
Before-Tax Return	__%	__%	__%
After-Tax Return	__%	__%	__%
If You Sell Your Shares at End of Period:			
Before-Tax Return	__%	__%	__%
After-Tax Return	__%	__%	__%
Index (reflects no deduction for fees, expenses, or taxes)	__%	__%	__%

Before-and after-tax returns would be required to be presented in the order specified, using the captions provided by Form N–1A.[47] The table of returns would be required for each class of a fund offered in the prospectus. The four types of return for each class would be required to be presented adjacent to one another and not interspersed with the returns of other classes or funds.[48] This should facilitate comparisons among the returns shown.

We considered giving funds flexibility to create different formats for presenting the required information. We elected not to propose this alternative because of potential investor confusion. We believe that it would be easier for shareholders both to compare funds and to understand the differences among the different measures of return for any particular fund if all funds present this information in the same manner, using the same captions. Commenters are requested to address whether the Commission should require that before-and after-tax return information be presented in a specific format, using required captions. Does the proposed table present before-and after-tax return information in a clear and understandable way? Do the proposed captions adequately describe the information presented? Will investors be able to understand the presentation for funds with multiple classes and multiple portfolios? Is there a more

with such a proposal, the Division consider whether the MDFP would be more useful to investors in shareholder reports. Form N–1A Adopting Release, *supra* note 15, at 13929.

[41] MDFP Release, *supra* note 19, at 19052.

[42] Items 2(c)(2), 7(e), and 9 of Form N–1A.

[43] Item 2(c)(2)(i) of Form N–1A; Form N–1A Adopting Release, *supra* note 15, at 13922.

[44] Instructions 1 and 3 to Item 2(c)(2) of Form N–1A.

[45] Item 9 of Form N–1A.

[46] Proposed Items 2(c)(2)(iii) and 5(b)(2) of Form N–1A.

Although the proposed performance table in the prospectus risk/return summary includes the return of a broad-based securities market index as shown in the text, the table required in the MDFP does not. The MDFP includes the performance of a broad-based securities market index in the line graph that accompanies the table. *See* proposed Item 2(c)(2)(iii) of Form N–1A; Item 5(b)(1) of Form N–1A.

[47] Proposed Items 2(c)(2)(iii) and 5(b)(2) of Form N–1A.

[48] Instruction 3(c) to proposed Item 2 and Instruction 12 to proposed Item 5 of Form N–1A.

effective way to present after-tax returns for these funds?

D. Exemptions from the Disclosure Requirement

We are proposing to exempt money market funds from the requirement to disclose after-tax returns.[49] We are also proposing to permit a fund that is offered as an investment option in a participant-directed defined contribution plan or variable insurance contract to omit the after-tax return information in a prospectus for use by participants in the plan or owners of the contract.[50]

Money market funds typically do not accumulate or distribute capital gains and their returns are generally in the form of income distributions, which are taxable on a current basis. As a result, the tax consequences of investing in different money market funds should be similar, *i.e.,* current taxation on income distributions. For this reason, requiring money market funds to disclose after-tax returns would not significantly assist an investor in comparing different money market funds. In addition, it could place money market funds at a competitive disadvantage vis-a-vis competing financial products, such as bank savings accounts and certificates of deposit, that are not required to disclose after-tax returns. For these reasons, we have determined not to extend to money market funds the requirement to disclose after-tax returns.

We also are proposing to permit a fund to omit the after-tax return information in a prospectus used exclusively to offer fund shares as investment options for:

- A defined contribution plan that meets the requirements for qualification under section 401(k) of the Internal Revenue Code (''Code'');
- A tax-deferred arrangement under section 403(b) or 457 of the Code;
- A variable insurance contract as defined in section 817(d) of the Code, if covered in a separate account prospectus; or
- A similar plan or arrangement pursuant to which an investor is not taxed on his or her investment in the fund until the investment is sold.[51]

The proposed after-tax return information would largely be irrelevant to investors in those arrangements because they are not subject to current taxation on fund distributions and their tax consequences on a sale of fund shares are different than those experienced by investors in taxable accounts.[52]

The Commission considered whether to exclude tax-exempt funds from the requirement to disclose after-tax returns.[53] While most, if not all, income distributed by a tax-exempt mutual fund generally will be tax-exempt, a tax-exempt mutual fund may also make capital gains distributions that are taxable and an investor is taxable on gains from the sale of fund shares.[54] As a result, the performance of a tax-exempt fund may be affected by taxes and taxes may have a greater or lesser impact on different tax-exempt funds. Therefore, we have not proposed to exclude tax-exempt funds from the required disclosure.[55]

We request that commenters discuss whether the proposed exemptions from the after-tax return disclosure requirements are appropriate. Should tax-exempt funds or any other types of funds be exempted from the requirements?

E. Advertisements and Other Sales Literature

The Commission is proposing to require that all fund advertisements and sales literature that include after-tax performance information also include after-tax returns computed according to the standardized formulas prescribed in Form N–1A for computation of after-tax returns in the risk/return summary and MDFP.[56] Any quotation of non-standardized after-tax return also would be subject to the same conditions currently applicable to quotations of non-standardized performance that are included in fund advertisements and sales literature.[57] Requiring advertisements and sales literature that include after-tax returns also to include standardized pre-and post-liquidation after-tax returns is intended to prevent advertisements and sales literature from being misleading and to permit shareholders to compare claims about after-tax performance.

Comment is requested regarding the inclusion of after-tax returns in fund advertisements and other sales literature. Is the proposed requirement to disclose standardized after-tax returns in any advertisement or other sales literature containing after-tax

[49] Proposed Item 2(c)(2)(iii) of Form N–1A. Money market funds are already exempted from the requirements of Item 5 of Form N–1A.

[50] Proposed General Instruction C.3(d)(i) of Form N–1A. The proposed instruction would permit a fund to omit from its prospectus the information required by Items 2(c)(2)(iii)(A), (B), and (D), and 2(c)(2)(iv), 5(b)(2)(i), (ii), and (iv), and 5(b)(3) if the fund's prospectus will be used exclusively to offer fund shares as investment options in specified types of plans.

[51] *Id.* We propose expanding the types of prospectuses that may omit or modify certain information required by Form N–1A to include prospectuses used to offer fund shares as investment options for plans or arrangements similar to those currently enumerated in General Instruction C.3.(d)(i) of Form N–1A. Proposed General Instruction C.3(d)(i)(D) of Form N–1A. We are proposing this change in order to accommodate future changes in the tax law that may permit new types of plans or arrangements similar to those currently enumerated in the instruction.

[52] *See* IRS Publication 575, *Pension and Annuity Income* (1999), at 4 (explaining tax treatment of earnings under a variable annuity contract) and 8–19 (explaining tax treatment of distributions from retirement plans); IRS Publication 525, *Taxable and Non-Taxable Income* (1999), at 3 (explaining tax treatment of contributions to a retirement plan) and 22 (explaining tax treatment of proceeds of a life insurance contract); IRS Publication 575, *Pension and Annuity Income* (1999), at 4 (tax treatment of Section 457 Deferred Compensation Plan); IRS Publication 571, *Tax Sheltered Annuity Programs for Employees of Public Schools and Certain Tax-Exempt Organizations* (1999), at 2 (explaining tax treatment of Section 403(b) tax sheltered annuities).

[53] The Division of Investment Management has taken the position that an investment company with a name that implies that its income distributions will be exempt from federal income taxation should have a fundamental policy requiring that during periods of normal market conditions (i) the fund will have at least 80 percent of its net assets in tax-exempt securities or (ii) the fund's assets will be invested so that at least 80 percent of the income will be tax-exempt. The Commission has proposed to codify this position. Investment Company Act Release No. 22530 (Feb. 27, 1997) [62 FR 10955 (Mar. 10, 1997)], correction [62 FR 24161 (May 2, 1997)], at 10958.

[54] Interest on any state or local bond is excluded from gross income. However, there is no exclusion for capital gains resulting from the sale of such bonds. *See* I.R.C. 103(a); IRS Publication 564, *Mutual Fund Distributions* (1999), at 2 (describing tax treatment of tax-exempt mutual funds).

[55] A tax-exempt fund, like any other fund, may assume, when calculating after-tax returns, that no taxes are due on the portions of any distribution that would not result in federal income tax on an individual. Instruction 3 to proposed Item 21(b)(3) and Instruction 3 to proposed Item 21(b)(4) of Form N–1A.

[56] Proposed rule 482(e)(4) would permit the standardized after-tax returns for 1-; 5-; and 10-year periods to be contained in an advertisement, provided that the standardized after-tax returns (i) are current to the most recent calendar quarter ended prior to the submission of the advertisement for publication; (ii) are accompanied by quotations of standardized before-tax return; (iii) include both pre-and post-liquidation standardized after-tax returns; (iv) are set out with equal prominence to one another and in no greater prominence than the required quotations of standardized before-tax return; and (v) identify the length of and the last day of the 1-, 5-, and 10-year periods.

Any other measures of after-tax return could be included in advertisements if accompanied by the standardized measures of after-tax return. Proposed rule 482(e)(5)(iii). Similarly, measures of after-tax return could be included in other sales materials if accompanied by the standardized measures of after-tax return. Proposed rule 34b–1(b)(1)(iii)(B).

[57] Specifically, any measure of after-tax return in a rule 482 advertisement would have to reflect all elements of return and could be set out in no greater prominence than the required quotations of standardized before-tax and after-tax returns. The advertisement would have to identify the length of and the last day of the period for which performance is measured. Proposed rule 482(e)(5)(i), (iv), and (v).

In addition, any sales literature that contains a quotation of performance that has been adjusted to reflect the effect of taxes would remain subject to the other requirements of rule 34b–1.

returns appropriate? Should any funds be exempted from this requirement? Commenters are also requested to address whether the Commission should require that all fund advertisements and sales literature that include any quotation of performance, including before-tax performance, include standardized after-tax returns.

F. Formulas for Computing After-Tax Return

Our proposals would require that funds compute after-tax returns using standardized formulas that are based largely on the current standardized formula for computing before-tax average annual total return.[58] After-tax returns would be computed assuming a hypothetical $1,000 one-time initial investment and the deduction of the maximum sales load and other charges from the initial $1,000 payment.[59] Also, after-tax average annual total returns would be calculated for 1-;, 5-;, and 10-year periods.[60]

The computation of after-tax return depends on several assumptions, such as tax bracket, that vary from investor to investor. As a result, the proposed standardized after-tax return measures are not intended as precise computations of any individual investor's after-tax returns from a fund, but as guides to understanding the effect of taxes on the fund's performance. In this regard, the proposed standardized after-tax return measures are similar to the standardized before-tax returns, which also are dependent on assumptions such as the purchase and sale date of fund shares, and do not precisely measure an individual investor's before-tax returns. The Commission believes that the presentation of standardized after-tax returns, coupled with the presentation of standardized before-tax returns, will provide investors with a more complete and accurate picture of a fund's performance than the before-tax returns standing alone.

The assumptions that the Commission proposes to require funds to use in calculating after-tax returns are described in this section. Commenters are asked to discuss any aspect of the proposed formulas for computing after-tax returns, including the proposed assumptions and whether other assumptions would be more appropriate. Commenters are asked to quantify the significance of different assumptions.

1. Tax Bracket

We are proposing that standardized after-tax returns be calculated assuming that distributions and gains on a sale of fund shares are taxed at the highest applicable individual federal income tax rate.[61] Computing after-tax returns with maximum tax rates will provide investors with the ''worst-case'' federal income tax scenario. Coupled with before-tax returns that reflect the imposition of taxes at a 0% rate, this ''worst-case'' scenario will effectively provide investors with the full range of historical after-tax returns. Short of providing investors with after-tax returns computed at each tax rate, which we have decided not to propose because of the complexity of the resulting disclosure, we believe that providing investors with the full range of federal income tax outcomes (0% and maximum rate) would provide investors the most complete information. In reaching this conclusion, we looked for guidance to current industry practice. Both funds and third party providers of information that provide after-tax performance information to investors frequently use the highest tax rates when calculating after-tax return.[62]

We considered proposing that after-tax returns be presented using intermediate tax rates in order to approximate the rates paid by typical mutual fund investors.[63] We decided not to propose this approach because it would not provide information regarding the maximum impact that federal income taxes could have on a fund's return and because of the complexity of determining the appropriate intermediate rate from one year to the next as tax brackets and tax rates change. We also considered proposing that after-tax returns be presented using multiple rates, but rejected this approach because it would result in a fairly complex table of returns that could be overwhelming.

We request comment on our proposal to use maximum tax rates to compute after-tax returns. Are there preferable alternatives? Commenters who believe that maximum tax rates should not be used because they are higher than the rates paid by typical mutual fund investors are asked to address whether their concerns are mitigated by our decision not to reflect state and local taxes, which will tend to result in an understated overall tax burden.[64] Commenters are asked to address whether the after-tax performance rankings of funds relative to each other depend on the tax rates used to compute returns and, if so, to indicate how this should affect the rate adopted by the Commission for the computation of after-tax returns. Commenters who favor the use of an intermediate rate should specify how the rate should be selected and how the rate should be established each year. Commenters who favor the use of multiple rates should suggest a format for presenting the resulting table of returns.

2. Historical versus Current Tax Rates

The Commission is proposing to require funds to calculate after-tax returns for 1-, 5-, and 10-year periods using the historical tax rates that were in effect during these periods, rather than the rates that are in effect at the time the computation is performed.[65] The use of historical rates will more accurately reflect a fund's actual after-tax returns. Moreover, to the extent that a fund has been managed in response to the then-current tax environment, it seems most appropriate to judge the effectiveness of the management strategy by applying tax rates that were

[58] Item 21(b)(1) of Form N–1A. Under the proposal, before-and after-tax returns included in the risk/return summary and the MDFP would be calculated as provided in proposed Item 21(b)(1)–(4) of Form N–1A. Instruction 2(a) to proposed Item 2 and proposed Item 5(b)(2) of Form N–1A.

[59] Proposed Items 21(b)(3) and 21(b)(4) of Form N–1A; Instruction 1 to proposed Item 21(b)(3) and Instruction 1 to proposed Item 21(b)(4) of Form N–1A.

[60] Proposed Items 21(b)(3) and 21(b)(4) of Form N–1A.

[61] Instruction 4 to proposed Item 21(b)(3) of Form N–1A; Instructions 4 and 7(d) to proposed Item 21(b)(4) of Form N–1A.

Currently, the highest individual marginal income tax rate imposed on ordinary income is 39.6%, and the highest rate imposed on long-term capital gains is 20%. I.R.C. 1(a)–(d), (h).

[62] *See, e.g.,* Access *Vanguard, Vanguard to Publish After-Tax Returns in Equity and Balanced Fund Reports (Oct. 11, 1999)* (visited Feb. 1, 2000) <http://www.vanguard.com/cgi-bin/pressroom/PRPrevious.html>; Fidelity Investments, *Track After-Tax Fund Performance On-Line* (visited Feb. 1, 2000) <http://personal400.fidelity.com/global/whatsnew/content/94689.html.tvsr/>; Morningstar, MUTUAL FUND 500 (1999 ed.); Catherine Voss Sanders, *Making April Less Taxing,* 5 MORNINGSTAR INVESTOR, Feb. 1997; Association for Investment Management and Research, AIMR PERFORMANCE PRESENTATIONS STANDARDS HANDBOOK (2d ed. 1997), at 59; *Mutual Fund Scoreboard,* Business Week, Feb. 1, 1999. *But see The Ultimate Mutual Fund Guide 2000,* MONEY, Feb. 2000, at 64 (reporting mutual fund tax-efficiency calculated based on the return of an investor in the 28 percent federal tax bracket); *Fund Survey,* FORBES, Feb. 7, 2000, at 166 (reporting after-tax returns reflecting ''the tax liability of an upper-middle income investor'').

[63] The median income of mutual fund shareholders is approximately $ 55,000. ICI, 1998 *Profile of Mutual Fund Investors* (Summer 1999). An individual taxpayer with taxable income over $25,750 but not over $62,450 is taxed at a marginal rate of 28 percent.I.R.C. 1(c).

[64] *See* discussion below at II.F.4 (State and Local Tax Liability).

[65] Instruction 4 to proposed Item 21(b)(3) and Instructions 4 and 7 to proposed Item 21(b)(4) of Form N–1A.

in place at the time. In addition, if current rates were used, the historical after-tax returns for previous periods would effectively change every time the current rates change.

Under our proposal, the rates to be used for computing after-tax returns for the most recent ten complete calendar years and the current calendar year would be as follows:

MAXIMUM INDIVIDUAL INCOME TAX RATES

[1990–2000]

Year	Long-term gains [66] (Percent)	Mid-term gains	Short-term gains/ordinary income (Percent)
2000	20		39.6
1999	20		39.6
1998	20		39.6
7/29/97–12/31/97	20	28	39.6
5/7/97–7/28/97	20		39.6
1/1/97–5/6/97	28		39.6
1996	28		39.6
1995	28		39.6
1994	28		39.6
1993	28		39.6
1992	28		31
1991	28		31
1990	28		33

We request comment on the advantages and disadvantages of using historical or current tax rates in computing after-tax return. We also request comment on whether the above table accurately states the highest tax rates for the periods and categories specified. The Commission anticipates that, if we adopt a rule requiring disclosure of after-tax returns using maximum historical rates, it will not be necessary for the Commission to publish the rates for future years. Is there any reason why it would be necessary for us to publish those rates?

3. Calendar versus Fiscal Year Measurement Period

Under the proposal, after-tax returns that appear in a fund's performance table in the risk/return summary would be calculated based on calendar-year periods, consistent with the before-tax return disclosure that currently appears in the risk/return summary.[67] After-tax returns that appear in the MDFP would be calculated on a fiscal year basis, consistent with the before-tax return disclosure that currently appears in the MDFP.[68] We believe that this presentation would facilitate investor comparisons of before-tax and after-tax returns.

Comment is requested on our proposal to require calendar year after-tax returns in the risk/return summary and fiscal year after-tax returns in the MDFP. Commenters who believe the proposal should be modified should address whether similar modifications should be made in the presentation of before-tax returns. Will the use of either the fiscal year or the calendar year encourage funds to ''time'' distributions or portfolio transactions in any way to artificially enhance the after-tax returns presented?

4. State and Local Tax Liability

In order to simplify the computation and presentation of after-tax returns, we propose to exclude state and local tax liability although this will tend to result in after-tax returns that are somewhat overstated.[69] State and local tax rates vary widely, and there is no single tax rate that could serve as a reasonable proxy for the state and local tax burden.[70] Presentation of separate after-tax returns for all 50 states and the District of Columbia would be overwhelming for investors and burdensome for funds.

We request comment on whether the after-tax return calculations should reflect the effect of state and local taxes. Commenters who support adjusting after-tax returns for state and local taxes should address how that should be done. Commenters also should address alternative means, such as narrative disclosure, by which funds can convey to investors the impact of state and local taxes.

5. Federal Alternative Minimum Tax and Phaseout Adjustments

Tax law provides favored treatment to certain kinds of income and expenses. Taxpayers who benefit from this special treatment may be subject to at least a minimum amount of tax through the ''alternative minimum tax.'' [71] In addition, certain tax credits, exemptions, and deductions are phased out for taxpayers whose adjusted gross

[66] I.R.C. 1; Standard Federal Tax Reports, 99 Index (CCH) 144, ¶ 601.

The holding period for long-term gains is more than 12 months, except for the period from July 29, 1997, through December 31, 1997, when it was more than 18 months. During that period, a ''mid-term'' capital gains rate applied if property was held more than 12 months but not more than 18 months. *See* I.R.C. 1222 (defining short-and long-term capital gain); IRS Publication 564, *Mutual Fund Distributions* (1997), at 9; IRS Publication 564, *Mutual Fund Distributions* (1998), at 1 (describing changes in holding periods in 1997).

[67] Proposed Item 2(c)(2)(iii) of Form N–1A; Item 2(c)(2)(iii) of Form N–1A (calendar-year disclosure of before-tax returns in risk/return summary).

[68] Proposed Item 5(b)(2) of Form N–1A; Item 5(b)(2) of Form N–1A (fiscal year disclosure of before-tax returns in MDFP).

[69] Instruction 4 to proposed Item 21(b)(3) and Instruction 4 to proposed Item 21(b)(4) of Form N–1A.

In general, funds and third parties that provide investors with information regarding after-tax returns do not reflect the effect of state and local taxes on return. *See, e.g,* Access Vanguard, *Vanguard to Publish After-Tax Returns in Equity and Balanced Fund Reports (Oct. 11, 1999)* (visited Feb. 1, 2000) <http://www.vanguard.com/cgi-bin/pressroom/PRPrevious.html>; Fidelity Investments, *Track After-Tax Fund Performance On-Line* (visited Feb. 1, 2000) <http://personal400.fidelity.com/global/whatsnew/content/94689.html.tvsr>; Association for Investment Management and Research, AIMR PERFORMANCE PRESENTATIONS STANDARDS HANDBOOK (2d ed. 1997) at 59; Morningstar, MUTUAL FUND 500 (1999 ed.); *Fund Survey,* FORBES, Feb. 7, 2000, at 166.

[70] Some states, such as Alaska, Florida, and Nevada, charge no personal income tax, while other states impose taxes at rates as high as 12%. *See* Federation of Tax Administrators, *State Individual Income Tax Rates,* (visited Jan. 14, 2000) <http://www.taxadmin.org/fta /rate/ind__inc.html>.

[71] I.R.C. 55. *See* IRS Publication 17, *Your Federal Income Tax* (1999), at 203 (explaining the effect of the alternative minimum tax).

income is above a specified amount.[72] The proposed after-tax return formulas would not take into account the effect of either the alternative minimum income tax or phaseouts.[73]

We believe that adjusting after-tax returns to reflect the impact of these provisions of tax law would complicate the after-tax return calculations without providing a commensurate benefit to a significant number of investors. Comment is requested regarding whether the after-tax return formulas should reflect the impact of the alternative minimum tax, the phaseouts, or any other taxes or adjustments not reflected in the proposed formulas.

6. Timing and Method of Tax Payment

The proposed after-tax return calculations would assume that any taxes due on a distribution are paid out of that distribution at the time the distribution is reinvested and would reduce the amount reinvested.[74] We have chosen this method to simplify the calculations, although we recognize that many investors do not pay income taxes out of the corresponding distributions. For example, a taxpayer might pay his or her taxes out of a bank account, either on estimated tax payment due dates or on April 15 of the year following the tax year. Or a taxpayer might pay taxes by redeeming fund shares at the time a tax payment is due. We request comment on how the after-tax return formulas should reflect the timing and method of tax payment. Commenters favoring methods other than that proposed should specify in detail how the proposed formula should be modified to reflect those methods.

7. Tax Treatment of Distributions

The proposed after-tax return formulas would require that the taxable amount and tax character (*e.g.,* ordinary income, short-term capital gain, long-term capital gain) of each distribution be as specified by the fund on the dividend declaration date, adjusted to reflect subsequent recharacterizations. Tax-exempt interest and non-taxable returns of capital would be assumed to result in no taxes.[75]

We have not proposed to specify in detail the tax consequences of fund distributions or other features having more complicated tax characteristics (*e.g.,* distributions derived from REIT income, distributions derived from commodities gains, foreign tax credits or deductions that pass through with respect to foreign source income). Funds should determine the tax consequences of such distributions or features by applying the tax law in effect on the date the distribution is reinvested. Commenters are requested to address whether the formula for calculating after-tax returns should be more specific in any way.

8. Capital Gains and Losses Upon a Sale of Fund Shares

The proposal would require that post-liquidation after-tax return be computed assuming a complete sale of fund shares at the end of the 1-, 5-, or 10-year measurement period, resulting in capital gains taxes or a tax benefit from any resulting capital losses.[76] In computing the taxes from any gain or the tax benefit from any loss, the rate used would be required to correspond to the tax character of the capital gain or loss (*e.g.*, short-term or long-term). The tax character of the capital gain or loss would be determined by the length of the measurement period (1, 5, or 10 years) in the case of the initial $1,000 investment and the length of the period between the reinvestment and the end of the measurement period in the case of reinvested distributions.[77] A fund would therefore be required to track the actual holding periods of reinvested distributions and could not assume that they have the same holding period as the initial $1,000 investment.[78]

The tax laws limit the extent to which a fund shareholder may deduct capital losses when the taxpayer does not have offsetting gains.[79] In order to simplify the computation of post-liquidation after-tax returns, we are proposing to allow funds to assume that a taxpayer has sufficient capital gains of the same character to offset any capital losses upon a sale of fund shares and therefore that the taxpayer may deduct the entire capital loss.[80]

Commenters are requested to discuss the proposed computation of capital gains taxes and the tax benefits from capital losses on a sale of fund shares. Should funds be required to track the actual holding periods of reinvested distributions, as proposed, or should they be permitted to assume that reinvested distributions have the same holding period as the initial $1,000 investment? Should capital losses on a sale of fund shares be permitted to be deducted in full, or should the deduction be limited in some way?

G. Narrative Disclosure

The proposal would require funds to include a short, explanatory narrative adjacent to the performance table in the risk/return summary and the MDFP.[81] This is intended to facilitate investor

[72] *E.g.,* I.R.C. 151(d)(3) (phaseout of personal exemptions). *See* IRS Publication 501, *Exemptions, Standard Deduction and Filing Information* (1999).

[73] Proposed Instruction 4 to Item 21(b)(3) and proposed Instruction 4 to Item 21(b)(4) of Form N–1A.

[74] Instruction 2 to proposed Item 21(b)(3) and Instruction 2 to proposed Item 21(b)(4) of Form N–1A.

This methodology is generally consistent with that used by industry participants. *See, e.g.,* Morningstar, MUTUAL FUND 500 (1999 ed.); Fidelity Investments, *Track After-Tax Fund Performance On-Line* (visited Feb. 1, 2000) <http:/ /personal400.fidelity.com/ global/whatsnew/ content/94689.html.tvsr>; Access Vanguard, *Vanguard After-Tax Return Calculator* (visited Feb. 1, 2000) <http: //majestic2.vanguard.com /FP/DA/ 0.1.vgi__Fund After Tax Sim /092110731601095233? AFTER__ TAX__CALC=SIMPLE>.

[75] Instruction 3 to proposed Item 21(b)(3) and Instruction 3 to proposed Item 21(b)(4) of Form N–1A.

[76] Instructions 6 and 7 to proposed Item 21(b)(4) of Form N–1A.

The capital gain or loss on the sale of fund shares would be computed by subtracting the tax basis from the redemption proceeds. Instruction 7(a) to proposed Item 21(b)(4) of Form N–1A. The tax basis would include the $1,000 initial payment and reinvested distributions, net of taxes assumed paid from the distributions, but not net of any sales loads imposed upon reinvestment. In addition, the tax basis would be adjusted for any distributions representing returns of capital and any other tax basis adjustments applicable to an individual taxpayer. Instruction 7(b) to proposed Item 21(b)(4) of Form N–1A.

[77] Instruction 7(d) to proposed Item 21(b)(4) of Form N–1A.

We note that, in computing post-liquidation returns for a one-year period, all gains realized upon a sale of fund shares at the end of the one-year period would be short-term. *See* I.R.C. 1222(1) (providing that the term ''short-term capital gain'' means ''gain from the sale or exchange of a capital asset held for not more than 1 year, if and to the extent such gain is taken into account in computing gross income'').

[78] Instruction 7(c) to proposed Item 21(b)(4) of Form N–1A.

[79] Under the Code, when calculating taxable income, an investor may fully offset short-term capital gains with short-term capital losses and fully offset long-term capital gains with long-term capital losses. Net short-term capital gain or loss may then be offset against net long-term capital gain or loss. If capital gains exceed capital losses, the investor is taxed on the difference at a rate that is determined by whether the net gain is short-or long-term. If capital losses exceed capital gains, the difference may be deducted from ordinary income, subject to a yearly limit of $3,000. I.R.C. 1211(b)(2) (providing that in the case of a taxpayer other than a corporation, losses from sales or exchanges of capital assets shall be allowed only to the extent of the gains from such sales or exchanges, plus (if such losses exceed such gains) the lower of $3,000 ($1,500 in the case of a married individual filing a separate return) or the excess of such losses over such gains.) *See* IRS Publication 544, *Sales and Dispositions of Assets* (1999), at 30 (explaining tax treatment of capital gains and losses).

[80] Instruction 7(d) to proposed Item 21(b)(4) of Form N–1A.

[81] Proposed Items 2(c)(2)(iv) and 5(b)(3) of Form N–1A.

The line graph in the MDFP also would be required to be accompanied by a statement to the effect that the account value shown in the graph does not reflect the taxes that a shareholder would pay on fund distributions or the redemption of fund shares. Proposed Item 5(b)(2) of Form N–1A.

understanding of the table. The narrative would be required to be in plain English, but we are not proposing to mandate that specific language be used.[82] The proposal would require the following information to be included in the narrative disclosure:[83]

- The differences among the four types of return presented, including whether the returns reflect redemption and the charges and taxes associated with redemption;
- Before-tax returns assume that all distributions are reinvested;
- The assumptions used in calculating after-tax returns, including (i) the use of the historical highest individual federal marginal income tax rates; (ii) the assumption that taxes are paid out of fund distributions and that distributions, less taxes, are reinvested; (iii) the exclusion of state and local taxes; and (iv) if post-liquidation after-tax returns are higher than before-tax returns net of fees and charges payable upon sale of fund shares, the reason for this result, including the assumption that a shareholder has sufficient gains from other sources to offset all losses from the redemption of fund shares;
- Actual after-tax returns depend on an investor's tax situation and may differ from those shown;
- The after-tax returns shown are not relevant to investors who hold their fund shares through tax-deferred arrangements, such as 401(k) plans or individual retirement accounts; and
- After-tax returns reflect past tax effects and are not predictive of future tax effects.

Comment is requested on the proposed narrative disclosure. Should any of the proposed items be eliminated? Should any other items be added? Should the narrative disclosure be specifically required to precede or follow the performance table? Should it appear in another location? Should funds have the flexibility to craft their own narrative disclosure, as proposed, or should the Commission require specific language for part or all of the explanation?

We are not proposing to require that specific items of narrative disclosure be included in fund advertisements and other sales materials that present after-tax performance. Should we require any narrative disclosure in advertisements and sales literature and, if so, what should it be?

H. Alternatives to Disclosure of After-Tax Return

We considered other possible methods for improving the disclosure of the tax consequences of mutual fund investments, including tax-efficiency ratios and potential capital gains exposure.

Tax-Efficiency Ratios. A tax-efficiency ratio is a ratio of after-tax and before-tax returns that measures the proportion of before-tax return that remains after taxes.[84] We are not proposing to require funds to disclose tax-efficiency ratios because we believe that these ratios may be more difficult for investors to interpret than after-tax returns. In any event, tax-efficiency ratios may be readily derived from before- and after-tax returns by taking the quotient of these two numbers.

Potential Capital Gains Exposure. When the securities in a mutual fund portfolio appreciate in value, the tax liability is deferred until the securities are sold by the fund and the gains are distributed. An investor who invests in a mutual fund with large amounts of unrealized capital gain, or capital gains that have been realized but not distributed, can potentially have significantly greater tax liability in the future than an investor in a similar fund that has less unrealized or undistributed gain. We considered requiring funds to include in their prospectuses a measure of capital gains exposure that shows the percentage of a fund's assets that represents unrealized and realized but undistributed capital gains.[85] While we believe that this measure could provide useful information, it would not provide information about the historical tax consequences of a fund's distributions. We believe that pre- and post-liquidation after-tax returns, taken together, would provide a more complete picture.

We request comment on these and other measures that could provide investors with enhanced information about the tax consequences of mutual fund investments. Are any measures preferable to after-tax returns? We also request comment on whether, and how, narrative disclosure in this area should be improved. For example, should the prospectus be required to describe the potential tax consequences to an investor of purchasing fund shares shortly before a dividend declaration date (*i.e.,* ''buying the dividend'') or purchasing shares in a fund that has significant amounts of unrealized gain in its portfolio securities?[86] Should shareholder reports be required to describe the tax management strategies the fund used in the most recent period?

I. Technical and Conforming Amendments

We are proposing to amend Rule 482(e)(3) under the Securities Act in order to clarify that the average annual total returns that are required to be shown in any performance advertisement are before-tax returns net of fees and charges payable upon a sale of fund shares.[87] This clarification is necessary because we have added other types of return to Form N–1A.

We also are proposing to amend rule 34b–1(b)(3) under the Investment Company Act, which excludes performance information contained in periodic reports to shareholders from the updating requirements of rule 34b–1. The proposed amendment extends the exclusion to standardized after-tax return information contained in periodic reports to shareholders.[88]

We also are proposing to delete an instruction contained in Form N–1A that provides that total return information in a mutual fund prospectus need only be current to the end of the fund's most recent fiscal year.[89] The instruction is unnecessary because the items of Form N–1A that require funds to include total returns in the prospectus have explicit instructions about how current the total return information must be.[90]

J. Compliance Date

If we adopt the proposed disclosure requirements, we expect to require all

[82] *See* rule 421(b) and (d) under the Securities Act [17 CFR 230.421(b) and (d)](requiring that all information in the prospectus be presented in clear, concise, and understandable fashion and that registrants use plain English principles in the organization, language, and design of the summary and risk factors sections of their prospectuses); General Instruction C.1 to Form N–1A (fund prospectus should be easy to understand and promote effective communication); Item 2 of Form N–1A (requiring that the response to Item 2 be stated in plain English).

[83] Proposed Items 2(c)(2)(iv) and 5(b)(3) of Form N–1A.

[84] *See* Morningstar, MUTUAL FUND 500 (1999 ed.) (reporting mutual fund tax-efficiency ratios); *The Ultimate Mutual Fund Guide 2000,* MONEY, Feb. 2000, at 64 (reporting mutual fund tax-efficiency).

[85] Both Morningstar, Inc., and *Business Week* publish measures of capital gains exposure. Morningstar, MUTUAL FUND 500 (1999 ed.); *Mutual Fund Scoreboard,* BUSINESS WEEK, Feb. 1, 1999.

[86] When a fund makes a distribution to its shareholders, the net asset value of the shares declines by the amount of the distribution. Thus, a person who makes a taxable investment in a mutual fund shortly before a distribution may have part of his or her initial investment returned in the form of a taxable distribution.

[87] 17 CFR 230.482(e)(3).

[88] 17 CFR 270.34b–1(b)(3)(iii)(B).

[89] Instruction 6 to Item 21(b)(1) of Form N–1A.

[90] Item 2(c)(2)(iii) of Form N–1A (providing that total returns included in the risk/return summary must be current to the end of the most recently completed calendar year); Item 5(b)(2) of Form N–1A (providing that total return in the MDFP must be as of the end of the last day of the most recent fiscal year).

new registration statements, post-effective amendments that are annual updates to effective registration statements, reports to shareholders, and profiles filed six months or more after the effective date of the amendments to comply with the proposed amendments. The Commission requests comment on this proposed compliance date.

III. General Request For Comments

The Commission requests comment on the amendments proposed in this Release, suggestions for additional provisions or changes to existing rules or forms, and comments on other matters that might have an effect on the proposals contained in this Release. We also request comment on whether the proposals, if adopted, would promote efficiency, competition, and capital formation. We will consider those comments in satisfying our responsibilities under section 2(c) of the Investment Company Act, section 2(b) of the Securities Act, and section 3(f) of the Exchange Act.[91] For purposes of the Small Business Regulatory Enforcement Fairness Act of 1996,[92] the Commission also requests information regarding the potential effect of the proposals on the U.S. economy on an annual basis. Commenters are requested to provide empirical data to support their views.

IV. Cost/Benefit Analysis

The Commission is sensitive to the costs and benefits imposed by its rules.

The proposed rule and form changes would require a fund to disclose its standardized after-tax returns for 1-, 5-, and 10-year periods. After-tax returns would accompany before-tax returns in the risk/return summary of fund prospectuses and in the MDFP, which is typically contained in fund annual reports. Funds would be required to include a short, explanatory narrative adjacent to the performance table in the risk/return summary and the MDFP. After-tax returns would be presented in two ways:

(i) assuming the shareholder continued to hold his or her shares at the end of the period; and (ii) assuming the shareholder sold his or her shares at the end of the period, realizing taxable gain or loss on the sale. The before- and after-tax returns would be required to be presented in a standardized tabular format. Although after-tax returns would not be required in fund advertisements and sales literature, any fund choosing to include after-tax returns in these materials would be required to include after-tax returns computed according to our standardized formula.

A. Benefits

Taxes are one of the most significant costs of investing in mutual funds through taxable accounts. Currently, the Commission requires mutual funds to disclose significant information about taxes to investors.[93] While this disclosure is useful, we believe funds can more effectively communicate to investors the tax consequences of investing. Therefore, the Commission is proposing amendments to Form N–1A and rules 482 and 34b–1 that would require disclosure of standardized mutual fund after-tax returns.

By requiring all funds to report after-tax performance pursuant to a standardized formula, the proposed amendments would allow investors to compare after-tax performance among funds. This could affect investor decisions relating to the purchase or sale of fund shares. This could have secondary benefits, such as the creation of new funds designed to maximize after-tax performance or causing existing funds to alter their investment strategies to invest in a more tax-efficient manner.

Requiring standardized after-tax performance in the prospectus, annual report, and fund advertisements and sales literature also should help prevent confusing and misleading after-tax performance claims by funds. Currently, fund advertisements and sales literature may contain tax-adjusted performance calculated according to non-standardized methods. In addition to making it difficult to compare after-tax performance measures among different funds, the lack of a standardized method for computing after-tax returns creates the possibility that after-tax performance information as currently reported could be misleading or confusing to investors.

The proposed amendments should also increase the amount of after-tax performance information available to investors. With the exception of the few funds that publish after-tax performance information, investors currently must rely on third party providers to obtain information regarding a fund's after-tax performance.

Moreover, by providing investors with information regarding a fund's after-tax performance, our proposal will help investors understand the magnitude of tax costs and how they affect fund performance. Increased understanding should have the beneficial effect of enhancing investor confidence in the fund industry.

B. Costs

Funds affected by the proposed after-tax requirements will incur costs in complying with the new disclosure. Funds would have to compute the after-tax returns using a standardized method prescribed by Form N–1A. The costs associated with computing the proposed after-tax performance would include the costs of purchasing or developing software, implementing a new system for computing the proposed returns, analyzing data for inclusion in the standardized formula, and training fund employees. In addition, funds would incur costs in incorporating the new disclosure in their prospectuses, annual reports to shareholders, advertisements, and sales literature. Funds could also incur costs in responding to questions from investors regarding the proposed after-tax returns.

It is anticipated that the costs of implementing new systems to compute the standardized after-tax performance will largely consist of one-time expenses. In addition, the software development and implementation costs may be reduced if software vendors begin to offer ''off-the-shelf'' programs for computing the proposed standardized after-tax performance data.[94] Also, the costs of analyzing data for inclusion in the standardized formula would be substantially greater in connection with a fund's first-time compliance with the proposed amendments than it would be in subsequent disclosures. Likewise, the

[91] Section 2(c) of the Investment Company Act [15 U.S.C. 80a–2(c)], section 2(b) of the Securities Act [15 U.S.C. 77b(b)], and section 3(f) of the Exchange Act [15 U.S.C. 78c(f)] require the Commission, when determining whether a rule is consistent with the public interest, to consider, in addition to the protection of investors, whether the action will promote efficiency, competition, and capital formation.

[92] Pub. L. No. 104–21, Title II, 110 Stat. 857 (1996).

[93] In its prospectus, a mutual fund is required to disclose (i) the tax consequences of buying, holding, exchanging, and selling fund shares, including the tax consequences of fund distributions; and (ii) whether the fund may engage in active and frequent portfolio trading to achieve its principal investment strategies, and, if so, the tax consequences of increased portfolio turnover and how this may affect fund performance. *See* Item 7(e) of Form N–1A; Instruction 7 to Item 4 of Form N–1A. A fund also must disclose in its prospectus and annual report the portfolio turnover rate and dividends and capital gains distributions per share for each of the last five fiscal years. *See* Items 9(a) and 22(b)(2) of Form N–1A. These items also require funds to show net realized and unrealized gain or loss on investments on a per share basis for each of the fund's last five fiscal years.

[94] A service provider that compiles and disseminates fund pricing and performance information recently announced that it will offer to calculate and publish after-tax returns for its fund clients. *See* Daly, *Program Lets Fund Companies Offer After-Tax Returns* (*Dec. 29, 1999*) (visited Feb. 9, 2000) <http://www.ignites.com/>.

costs of revising fund prospectuses, annual reports, advertisements, and sales literature to incorporate the new disclosure should decrease after the first disclosures complying with the proposed amendments have been made. Although the costs of updating the proposed disclosure in fund prospectuses, annual reports, advertisements, and sales literature would be ongoing, the costs incurred in subsequent disclosures should be less than the costs associated with the initial computations and disclosures because neither the formula for calculating performance nor the format for the disclosure is expected to change from year to year.

Because funds filing initial registration statements would not have any performance information to report, the proposed after-tax performance requirements would not impose any additional costs on the preparation and filing of an initial registration statement on Form N–1A. The disclosure required by the proposed amendments would appear in the first post-effective amendment that is required to include the after-tax return disclosure. The costs associated with including the proposed disclosure in this first post-effective amendment would consist of the costs required for developing a system for performing the standardized calculations and the costs of revising the prospectus to incorporate the new disclosure. Because the standardized after-tax disclosure that would be required in a fund's annual report would be very similar to the proposed standardized after-tax disclosure in the prospectus, the cost of including the proposed disclosure in the annual report would largely be limited to the cost of revising the report to incorporate the new disclosure. Moreover, because the proposals require that performance be presented in a standardized tabular format in the prospectus and annual report, the cost of revising these documents should be reduced. The costs incurred by funds choosing to include after-tax returns in fund advertisements and sales literature would be limited to the cost of revising the advertisements and sales literature to incorporate the same proposed standardized after-tax returns that would be required to appear in fund prospectuses.

As discussed above, the proposed amendments could result in the creation of new funds designed to maximize after-tax performance. The proposed amendments could also cause existing funds to alter their investment strategies to invest in a more tax-efficient manner. It is possible that funds could incur costs as a result of these potential consequences.

To assist in the evaluation of the costs and benefits that may result from these proposed rule amendments, the Commission requests that commenters provide views and data relating to any costs and benefits associated with these proposals.

V. Summary of Initial Regulatory Flexibility Analysis

The Commission has prepared an Initial Regulatory Flexibility Analysis (''Analysis'') in accordance with 5 U.S.C. 603. The Analysis relates to the proposed amendments to Form N–1A and rules 482 and 34b–1. The following summarizes the Analysis.

The Analysis sets forth the statutory authority for the proposed amendments. The Analysis explains that the proposed form and rule changes would require a fund to disclose its standardized after-tax returns for 1-, 5-, and 10-year periods. The proposal would require after-tax return information to be included in the risk/return summary of the prospectus and in Management's Discussion of Fund Performance (''MDFP''), which is typically contained in the annual report. Funds would be required to include a short, explanatory narrative adjacent to the performance table in the risk/return summary and the MDFP. After-tax returns, which would accompany before-tax returns in fund prospectuses and annual reports, would be presented in two ways: (i) assuming the shareholder continued to hold his or her shares at the end of the period; and (ii) assuming the shareholder sold his or her shares at the end of the period, realizing taxable gain or loss on the sale. The proposed after-tax returns would be required to be presented in a standardized tabular format. Although after-tax returns would not be required in fund advertisements and sales literature, any fund choosing to include after-tax returns in these materials would be required to include after-tax returns computed according to our standardized formula.

The Analysis discusses the impact of the proposed amendments on small entities. For purposes of the Regulatory Flexibility Act, a fund is considered a small entity if the fund, together with other funds in the same group of related funds, has net assets of $50 million or less as of the end of its most recent fiscal year.[95]

The Analysis notes that as of December 1999, there were approximately 2,900 open-end management investment companies that may be affected by one or more of the proposed amendments, including 150 that are small entities.

The Analysis also discusses the reporting and other compliance requirements associated with the proposals contained in this Release. The proposed amendments to Form N–1A would require funds subject to the amendments to disclose standardized after-tax returns in prospectuses and annual reports to shareholders. The proposed amendments to rules 482 and 34b–1 would require funds to include standardized after-tax returns in fund advertisements and sales literature when funds voluntarily choose to include after-tax performance information in their advertisements and sales literature.

As explained in the Analysis, after assessing the proposed amendments in light of the current reporting requirements and consulting with industry representatives, we evaluated the effect that the proposed amendments would have on the preparation of registration statements, annual reports to shareholders, advertisements, and sales literature. We estimate that it will take approximately 18 additional hours per portfolio to prepare post-effective amendments to the registration statement on Form N–1A.[96] The Commission estimates that it will take approximately 7.5 additional hours per management investment company registered on Form N–1A to prepare annual reports to shareholders pursuant to rule 30d–1 if the investment company elects to include the MDFP in the annual report.[97] The Commission estimates that the proposed amendments to rule 482 will impose approximately .5 additional hours per portfolio on those funds that elect to include after-tax performance information in their advertisements and are therefore required to comply with the proposed amendments to rule 482.[98]

[95] 17 C.F.R. 270.0–10.

[96] Since an investment company filing an initial registration statement on Form N–1A has no performance history to disclose, the proposed amendments would not affect such initial filings. This estimate is based upon staff assessment of the proposed amendments in light of the current hour burden and current reporting requirements.

[97] Form N–1A requires that the prospectus include the MDFP unless the information is included in the fund's latest annual report to shareholders and the fund provides a copy of the annual report, upon request and without charge, to each person to whom a prospectus is delivered. This estimate is based upon staff assessment of the proposed amendments in light of the current hour burden and current reporting requirements.

[98] As discussed more fully in Section VI, *infra,* the hour burden associated with rule 482 is included in Form N–1A. This estimate is based upon staff assessment of the proposed amendments

Continued

We also estimate that an additional .5 hours per response will be imposed by the proposed amendments to rule 34b–1 on those funds that choose to include after-tax performance information in their sales literature.[99]

As stated in the Analysis, the Commission considered several alternatives to the proposed amendments, including establishing different compliance or reporting requirements for small entities or exempting them from all or part of the proposed amendments. The Commission believes that establishing different requirements applicable specifically to small entities is inconsistent with the protection of investors. We note that mutual funds that qualify as small entities are already required to disclose standardized performance. The Commission also believes that adjusting the proposals to establish different compliance requirements for small entities could undercut the purpose of the proposed amendments: to emphasize to investors the impact of taxes on a fund's return and to enable investors to make effective comparisons among various fund performance claims.

The Commission encourages the submission of written comments on matters discussed in the Analysis. Comment specifically is requested on the number of small entities that would be affected by the proposed amendments and the impact of such proposals on small entities. Commenters are asked to describe the nature of any impact and provide empirical data supporting the extent of the impact. These comments will be placed in the same public comment file as comments on the proposals. A copy of the Analysis may be obtained by contacting Maura S. McNulty, Securities and Exchange Commission, 450 5th Street, N.W., Washington, D.C. 20549–0506.

VI. Paperwork Reduction Act

Certain provisions of the proposed amendments contain ''collection of information'' requirements within the meaning of the Paperwork Reduction Act of 1995 [44 U.S.C. 3501, *et seq.*], and the Commission has submitted the proposed collections of information to the Office of Management and Budget (''OMB'') for review in accordance with 44 U.S.C. 3507(d) and 5 CFR 1320.11. The titles for the collections of information are: (1) ''Form N–1A under the Investment Company Act of 1940 and Securities Act of 1933, Registration Statement of Open-End Management Investment Companies;'' (2) ''Rule 30d-1 under the Investment Company Act of 1940, Reports to Stockholders of Management Companies;'' (3) ''Registration Statements—Regulation C;'' [100] and (4) ''Rule 34b–1 of the Investment Company Act of 1940, Sales Literature Deemed to Be Misleading.'' An agency may not conduct or sponsor, and a person is not required to respond to, a collection of information unless it displays a currently valid control number.

Form N–1A (OMB Control No. 3235–0307) was adopted pursuant to section 8(a) of the Investment Company Act [15 U.S.C. 80a–8] and section 5 of the Securities Act [15 U.S.C. 77e]. Rule 30d–1 (OMB Control No. 3235–0025) was adopted pursuant to Section 30(e) of the Investment Company Act [15 U.S.C. 80a–29]. Rule 482 of Regulation C (OMB Control No. 3235–0074) was adopted pursuant to section 10(b) of the Securities Act [15 U.S.C. 77j(b)]. Rule 34b–1 (OMB Control No. 3235–0346) was adopted pursuant to section 34(b) of the Investment Company Act [15 U.S.C. 80a–33(b)].

Because taxes are one of the largest costs associated with a mutual fund investment, the Commission is proposing form and rule amendments to Form N–1A, rule 482, and rule 34b–1 to help investors understand the magnitude of tax costs and how they affect fund performance.

Our proposals would require a fund to disclose its standardized after-tax returns for 1-, 5-, and 10-year periods. The proposal would require after-tax return information to be included in the risk/return summary of the prospectus and in Management's Discussion of Fund Performance (''MDFP''), which is typically contained in the annual report. Funds would be required to include a short, explanatory narrative adjacent to the performance table in the risk/return summary and the MDFP. After-tax returns, which would accompany before-tax returns in fund prospectuses and annual reports, would be presented in two ways: (i) Assuming the shareholder continued to hold his or her shares at the end of the period; and (ii) assuming the shareholder sold his or her shares at the end of the period, realizing taxable gain or loss on the sale. The before- and after-tax returns would be required to be presented in a standardized tabular format. Although after-tax returns would not be required in fund advertisements and sales literature, the Commission is also proposing amendments to rules 482 and 34b–1 that would require any fund choosing to include after-tax returns in these materials to include after-tax returns computed according to our standardized formula.

The information required by the proposed amendments is primarily for the use and benefit of investors. The Commission is concerned that mutual fund investors who are subject to current taxation may not fully appreciate the impact of taxes on their fund investments because mutual funds are currently required to report their performance on a before-tax basis only. Many investors consider performance one of the most significant factors when selecting or evaluating a fund, and we believe that requiring funds to disclose their after-tax performance would allow investors to make better-informed decisions. The information required to be filed with the Commission pursuant to the information collections also permits the verification of compliance with securities law requirements and assures the public availability and dissemination of the information.

Form N–1A

Form N–1A, including the proposed amendments, contains collection of information requirements. The purpose of Form N–1A is to meet the registration and disclosure requirements of the Securities Act and the Investment Company Act and to enable funds to provide investors with information necessary to evaluate an investment in the fund. The likely respondents to this information collection are open-end funds registering with the Commission on Form N–1A.

We estimate that 170 initial registration statements are filed annually on Form N–1A, registering 298 portfolios, and that the current hour burden per portfolio per filing is 824 hours, for a total annual hour burden of 245,552 hours.[101] We estimate that 4,500 post-effective amendments to registration statements are filed

in light of the current hour burden and current reporting requirements.

[99] This estimate is based upon staff assessment of the proposed amendments in light of the current hour burden and current reporting requirements.

[100] The proposed amendments would modify rule 482, which is part of Regulation C under the Securities Act of 1933. Regulation C describes the disclosure that must appear in registration statements under the Securities Act and Investment Company Act. The PRA burden associated with rule 482, however, is included in the investment company registration statement form, not in Regulation C. In this case, the proposed amendments to rule 482 will affect the burden hours for Form N–1A, the registration form for open-end investment companies that currently advertise pursuant to rule 482. We estimate that the burden associated with Regulation C will not change with the amendments to rule 482.

[101] These estimates are based on filings received in calendar year 1999. The currently approved hour burden per portfolio for an initial Form N–1A is 824 hours.

annually on Form N–1A, for 7,875 portfolios, and that the current hour burden per portfolio per post-effective amendment filing is 104 hours, for an annual burden of 819,000 hours.[102] Thus, we estimate a current total annual hour burden of 1,064,552 hours for the preparation and filing of Form N–1A and post-effective amendments on Form N–1A.

The proposed amendments would not affect the hour burden of an initial filing of a registration statement on Form N–1A since an investment company filing such an initial form would have no performance history to disclose. Post-effective amendments to such registration statements, however, would contain performance figures and thus be affected by the proposed amendments. We estimate that the proposed amendments would increase the hour burden per portfolio per filing of a post-effective amendment by 18 hours.[103] Of the 7,875 funds referenced in post-effective amendments, 1,040 are money market funds, which would be exempted from the proposed after-tax disclosure requirements. An additional 1,575 funds are used as investment vehicles for variable insurance contracts, which would be permitted to omit the after-tax information. Thus, approximately 5,260 of the 7,875 funds referenced in post-effective amendments would be affected by the proposed amendments.[104] The Commission estimates that if the proposed amendments to Form N–1A are adopted, the total annual hour burden for all funds for preparation and filing of initial registration statements and post-effective amendments on Form N–1A would be 1,159,311 hours.[105]

Compliance with the disclosure requirements of Form N–1A is mandatory. Responses to the disclosure requirements will not be kept confidential.

Rule 30d–1 Shareholder Reports

Rule 30d–1, including the proposed amendments, contains collection of information requirements.[106] Section 30(e) and rule 30d–1 require registered management investment companies to transmit to shareholders, at least semi-annually, reports containing financial statements and certain other information. The reports are intended to apprise current shareholders of the operational and financial condition of the fund.

There are approximately 3,490 management investment companies subject to rule 30d–1.[107] The Commission estimates that of those 3,490 management investment companies, approximately 2,280 would be subject to the after-tax disclosure requirements.[108] We estimate that the current hour burden for preparing and filing shareholder reports in compliance with rule 30d–1 is 202.5 hours. With the proposed amendments, we estimate that the hour burden will be increased by 7.5 hours[109] to 210 hours, for a total annual hour burden to the industry of 723,825.[110]

Compliance with the disclosure requirements of rule 30d–1 is mandatory. Responses to the disclosure requirements will not be kept confidential.

Rule 482

Rule 482, including the proposed amendments, contains collection of information requirements. The rule is a safe harbor that permits a fund to advertise information the ''substance of which'' is contained in its statutory prospectus, subject to the requirements of the rule. Rule 482 limits performance information to standardized quotations of yield and total return and other measures of performance that reflect all elements of return.

The increased burden associated with the proposed amendments to rule 482 is included in the investment company registration statement forms.[111] Thus, the proposed amendments to rule 482 will affect the burden hours for Form N–1A, the registration form for open-end investment companies that currently may advertise pursuant to rule 482. As described above, there are approximately 5,260 funds filing post-effective amendments that would be affected by the proposed amendments. The Commission further estimates that three percent of these funds would elect to advertise after-tax performance and therefore be required to comply with the proposed amendments to rule 482.[112] We estimate that the additional hour burden required to comply with the proposed amendments to rule 482 is .5 hours.[113]

Compliance with Rule 482 is mandatory for every registered fund that issues advertisements. Responses to the disclosure requirements will not be kept confidential.

Rule 34b–1

Rule 34b–1, including the proposed amendments, contains collection of information requirements. The rule

[102] These estimates are based on filings received in calendar year 1999. The currently approved hour burden per portfolio for post-effective amendments to Form N–1A is 104 hours.

[103] This estimate is based on the staff's consultations with industry representatives.

[104] The number of funds referenced in post-effective amendments that would be affected by the proposed amendments is computed by subtracting those funds that are exempt from or permitted to omit the proposed after-tax disclosure from the number of funds referenced in post-effective amendments (7,875 − 1,040 − 1,575, or 5,260). For purposes of our analysis, we have not excluded certain funds that also would be permitted to omit the after-tax return disclosure, such as funds that distribute prospectuses for use by investors in 401(k) plans or other similar tax-deferred arrangements. While these funds would be permitted to omit the after-tax return disclosure in prospectuses distributed to investors in these tax-deferred arrangements, they would still incur a burden from including the disclosure in prospectuses distributed to all other investors.

[105] This total annual hour burden is calculated by adding the total annual hour burden for initial registration statements and the total annual hour burden for post-effective amendments, including the additional burden imposed by the proposed amendments. As explained, the hour burden per portfolio for an initial filing would remain at 824 hours, for a total burden of 245,552 hours. The hour burden per portfolio for a post-effective amendment would be 122 hours (104 + 18), with a burden of 104 hours imposed on all 7,875 portfolios (104 × 7,875, or 819,000) and the additional 18 hours affecting 5,260 portfolios (18 × 5,260, or 94,680). Moreover, since the burden associated with rule 482 is included in Form N–1A (as discussed in note 100, *supra*), the Form N–1A burden would include the estimated rule 482 burden of .5 hours (the rule 482 burden is discussed below) that would be imposed on the three percent of funds that we estimate would advertise after-tax returns [.5 × (5,260 × 3%), or 79]. Thus, the total annual hour burden for all funds for the preparation and filing of initial registration statements and post-effective amendments on Form N–1A, including the proposed amendments would be 1,159,311 hours (245,552 + 819,000 + 94,680 + 79).

[106] The proposed amendments to Form N–1A require that if a fund elects to include the MDFP in its annual report, it must include the after-tax return information in its annual report.

[107] These estimates are based on filings received in calendar year 1999. The currently approved hour burden per registered management investment company subject to rule 30d–1 is 202.5 hours.

[108] The Commission estimates that 2,900 of the 3,490 investment companies subject to rule 30d–1 are registered on Form N–1A and therefore would be subject to the proposed amendments. Of these 2,900 investment companies, the Commission estimates that approximately 200 offer only money market funds and would therefore be exempt from the proposed amendments, and that approximately 300 other investment companies would also be exempt because they serve as investment options for variable insurance contracts. Moreover, the Commission estimates that approximately five percent of funds do not elect to locate the MDFP in their annual reports and therefore would not incur any additional burden in including the proposed disclosure in their annual reports. Thus, the number of investment companies that would be subject to the after-tax requirements is 2,280 [(2,900 − 200 − 300) x 95%].

[109] This estimate is based on the staff's consultations with industry representatives.

[110] The total annual hour burden is computed by adding the current total annual burden (3,490 x 202.5, or 706,725) to the total additional annual burden imposed by the proposed amendments (2,280 x 7.5, or 17,100).

[111] *See* note 100, *supra.*

[112] This estimate is based on the assumption that tax-managed funds and index funds would be most likely to advertise after-tax performance.

[113] This estimate is based on the staff's consultations with industry representatives.

governs sales material that is accompanied or preceded by the delivery of a statutory prospectus and requires the inclusion of standardized performance data and certain legend disclosure in sales material that includes performance data.

We estimate that approximately 8,495 respondents file approximately 4.35 responses annually pursuant to rule 34b–1.[114] Of these respondents, we estimate that 1,040 are money market funds that would be exempted from the proposed amendments and that an additional 620 funds and unit investment trusts (''UITs'') registered on Forms N–3 and N–4 would not be affected by the proposed amendments. We estimate that an additional 1,575 funds registered on Form N–1A and subject to rule 34b–1 are used as underlying portfolios for variable insurance contracts and would not advertise after-tax performance due to their unique tax-deferred nature. Thus, 5,260 respondents subject to rule 34b–1 would also be subject to the proposed after-tax disclosure.[115] We further estimate that three percent of respondents subject to rule 34b–1 would elect to include after-tax performance and therefore be subject to the proposed amendments.[116] The burden for rule 34b–1 requires approximately 2.4 hours per response resulting from creating the information required by rule 34b–1. We estimate that rule 34b–1 imposes a current total annual reporting burden of 88,800 hours on the industry.[117] We estimate that the additional hour burden required to comply with the proposed amendments to rule 34b–1 is .5 hours, for a total burden per response of 2.9 hours and a total annual burden on the industry of 89,143 hours.[118]

Compliance with rule 34b–1 is mandatory for every registered investment company that issues sales literature. Responses to the disclosure requirements will not be kept confidential.

Request for Comments

We request your comments on the accuracy of our estimates. Pursuant to 44 U.S.C. 3506(c)(2)(B), the Commission solicits comments to: (i) Evaluate whether the proposed collection of information is necessary for the proper performance of the functions of the agency, including whether the information will have practical utility; (ii) evaluate the accuracy of the Commission's estimate of burden of the proposed collection of information; (iii) determine whether there are ways to enhance the quality, utility, and clarity of the information to be collected; and (iv) evaluate whether there are ways to minimize the burden of the collection of information on those who are to respond, including through the use of automated collection techniques or other forms of information technology.

Persons submitting comments on the collection of information requirements should direct the comments to the Office of Management and Budget, Attention: Desk Officer for the Securities and Exchange Commission, Office of Information and Regulatory Affairs, Room 3208, New Executive Office Building, Washington, D.C. 20503, and should send a copy to Jonathan G. Katz, Secretary, Securities and Exchange Commission, 450 5th Street, N.W., Washington, D.C. 20549–0609, with reference to File No. S7–09–00. OMB is required to make a decision concerning the collection of information between 30 and 60 days after publication of this release. Consequently, a comment to OMB is best assured of having its full effect if OMB receives it within 30 days after publication of this Release.

VII. Statutory Authority

The Commission is proposing amendments to Form N–1A pursuant to authority set forth in sections 5, 6, 7, 10, and 19(a) of the Securities Act [15 U.S.C. 77e, 77f, 77g, 77j, 77s(a)] and sections 8, 24(a), 30, and 38 of the Investment Company Act [15 U.S.C. 80a–8, 80a–24(a), 80a–29, 80a–37]. The Commission is proposing amendments to rule 482 pursuant to authority set forth in sections 5, 10(b), and 19(a) of the Securities Act [15 U.S.C. 77e, 77j(b), and 77s(a)]. The Commission is proposing amendments to rule 34b–1 pursuant to authority set forth in sections 34(b) and 38(a) of the Investment Company Act [15 U.S.C. 80a–33(b) and 80a–37(a)].

List of Subjects

17 CFR Part 230

Advertising, Investment companies, Reporting and recordkeeping requirements, Securities.

17 CFR Part 239

Reporting and recordkeeping requirements, Securities.

17 CFR Parts 270 and 274

Investment companies, Reporting and recordkeeping requirements, Securities.

Text of Proposed Rules and Forms

For the reasons set out in the preamble, Title 17, Chapter II of the Code of Federal Regulations is proposed to be amended as follows:

PART 230—GENERAL RULES AND REGULATIONS, SECURITIES ACT OF 1933

1. The authority citation for part 230 continues to read in part as follows:

Authority: 15 U.S.C. 77b, 77f, 77g, 77h, 77j, 77r, 77s, 77z–3, 77sss, 78c, 78d, 78*l*, 78m, 78n, 78o, 78w, 78*ll*(d), 79t, 80a–8, 80a–24, 80a–28, 80a–29, 80a–30, and 80a–37, unless otherwise noted.

* * * * *

2. Section 230.482 is amended by:

a. revising the introductory text of paragraph (e)(3);

b. removing ''; and'' at the end of paragraph (e)(3)(iv) and in its place adding a period;

c. redesignating paragraph (e)(4) as paragraph (e)(5);

d. adding new paragraph (e)(4); and

e. revising newly redesignated paragraph (e)(5) to read as follows:

§ 230.482 Advertising by an investment company as satisfying requirements of section 10.

* * * * *

(e) * * *

(3) Before-tax average annual total return (with redemption) for one, five, and ten year periods; *Provided,* That if the company's registration statement under the Securities Act of 1933 (15 U.S.C. 77a *et seq.*) has been in effect for less than one, five, or ten years, the time period during which the registration statement was in effect is substituted for the period(s) otherwise prescribed; and *Provided further,* That such quotations:

* * * * *

(4) For an open-end management investment company, after-tax average annual total return (with and without redemption) for one, five, and ten year periods; *Provided,* That if the company's registration statement under the Securities Act of 1933 (15 U.S.C. 77a *et seq.*) has been in effect for less than one,

[114] These estimates are based on filings received in calendar year 1999. The currently approved hour burden per response for rule 34b–1 is 2.4 hours.

[115] This number is computed by subtracting from the number of respondents filing rule 34b–1 sales material the number of money market funds, the number of funds and UITs registered on Forms N–3 and N–4, and the number of funds used as underlying portfolios for variable insurance contracts (8,495 – 1,040 – 620 – 1,575, or 5,260).

[116] This estimate is based on the assumption that tax-managed funds and index funds would be most likely to advertise after-tax performance.

[117] The current total annual hour burden is computed by multiplying the number of responses filed annually under rule 34b–1 by the current hour burden (37,000 x 2.4). The total annual hour burden for the industry has increased significantly from previous estimates because we have reevaluated the number of respondents subject to rule 34b–1.

[118] The total annual burden is computed by adding the current burden (2.4 x 37,000, or 88,800) to the additional burden imposed by the proposed amendments [.5 x (8,495 – 1,040 – 620 – 1,575) x 4.35 x 3%, or 343].

five, or ten years, the time period during which the registration statement was in effect is substituted for the period(s) otherwise prescribed; and *Provided further,* That such quotations:

(i) Are based on the methods of computation prescribed in Form N–1A;

(ii) Are current to the most recent calendar quarter ended prior to the submission of the advertisement for publication;

(iii) Are accompanied by quotations of total return as provided for in paragraph (e)(3) of this section;

(iv) Include both after-tax average annual total return (with redemption) and after-tax average annual total return (without redemption);

(v) Are set out with equal prominence and are set out in no greater prominence than the required quotations of total return; and

(vi) Identify the length of and the last day of the one, five, and ten year periods; and

(5) Any other historical measure of company performance (not subject to any prescribed method of computation) if such measurement:

(i) Reflects all elements of return;

(ii) Is accompanied by quotations of total return as provided for in paragraph (e)(3) of this section;

(iii) In the case of any measure of performance adjusted to reflect the effect of taxes, is accompanied by quotations of total return as provided for in paragraph (e)(4) of this section;

(iv) Is set out in no greater prominence than the required quotations of total return; and

(v) Identifies the length of and the last day of the period for which performance is measured.

* * * * *

PART 270—RULES AND REGULATIONS, INVESTMENT COMPANY ACT OF 1940

3. The authority citation for part 270 continues to read in part as follows:

Authority: 15 U.S.C. 80a–1 *et seq.*, 80a–34(d), 80a–37, 80a–39 unless otherwise noted:

* * * * *

4. Section 270.34b–1 is amended by:

a. redesignating paragraphs (b)(1)(iii)(B) and (C) as paragraphs (b)(1)(iii) (C) and (D);

b. adding new paragraph (b)(1)(iii)(B); and

c. revising paragraph (b)(3) to read as follows:

§ 270.34b–1 Sales literature deemed to be misleading.

* * * * *

(b)(1) * * *

(iii) * * *

(B) Accompany any quotation of performance adjusted to reflect the effect of taxes with the quotations of total return specified by paragraph (e)(4) of § 230.482 of this chapter;

* * * * *

(3) The requirements specified in paragraph (b)(1) of this section shall not apply to any quarterly, semi-annual, or annual report to shareholders under Section 30 of the Act (15 U.S.C. 80a–29) containing performance data for a period commencing no earlier than the first day of the period covered by the report; nor shall the requirements of paragraphs (e)(3)(ii), (e)(4)(ii), and (f) of § 230.482 of this chapter apply to any such periodic report containing any other performance data.

* * * * *

PART 239—FORMS PRESCRIBED UNDER THE SECURITIES ACT OF 1933

5. The authority citation for part 239 continues to read, in part, as follows:

Authority: 15 U.S.C. 77f, 77g, 77h, 77j, 77s, 77z–2, 77sss, 78c, 78*l*, 78m, 78n, 78o(d), 78u–5, 78w(a), 78ll(d), 79e, 79f, 79g, 79j, 79l, 79m, 79n, 79q, 79t, 80a–8, 80a–24, 80a–29, 80a–30 and 80a–37, unless otherwise noted.

* * * * *

PART 274—FORMS PRESCRIBED UNDER THE INVESTMENT COMPANY ACT OF 1940

6. The authority citation for part 274 continues to read as follows:

Authority: 15 U.S.C. 77f, 77g, 77h, 77j, 77s, 78c(b), 78*l*, 78m, 78n, 78o(d), 80a–8, 80a–24, and 80a–29, unless otherwise noted.

Note: The text of Form N–1A does not and these amendments will not appear in the *Code of Federal Regulations.*

7. General Instruction C to Form N–1A (referenced in §§ 239.15A and 274.11A) is amended by:

a. revising the introductory text of paragraph 3.(d)(i);

b. republishing paragraph 3.(d)(i)(A);

c. republishing paragraph 3.(d)(i)(B) except for removing ''and'' at the end of the paragraph;

d. republishing paragraph 3.(d)(i)(C) except for removing the period at the end of the paragraph and adding in its place ''; and''; and

e. adding paragraph 3.(d)(i)(D) to read as follows:

Form N–1A

* * * * *

General Instructions

* * * * *

C. Preparation of the Registration Statement

* * * * *

3. Additional Matters:

* * * * *

(d) *Modified Prospectuses for Certain Funds.*

(i) A Fund may omit the information required by Items 2(c)(2)(iii)(A), (B), and (D), 2(c)(2)(iv), 5(b)(2)(i), (ii), and (iv), and 5(b)(3), and a Fund may modify or omit, if inapplicable, the information required by Items 7(b)–(d) and 8(a)(2), if the Fund's prospectus will be used exclusively to offer Fund shares as investment options for:

(A) A defined contribution plan that meets the requirements for qualification under section 401(k) of the Internal Revenue Code (26 U.S.C. 401(k));

(B) A tax-deferred arrangement under sections 403(b) or 457 of the Internal Revenue Code (26 U.S.C. 403(b) and 457);

(C) A variable contract as defined in section 817(d) of the Internal Revenue Code (26 U.S.C. 817(d)), if covered in a separate account prospectus; and

(D) A similar plan or arrangement pursuant to which an investor is not taxed on his or her investment in the Fund until the investment is sold.

* * * * *

8. Item 2 of Form N–1A (referenced in §§ 239.15A and 274.11A) is amended by:

a. revising paragraph (c)(2)(iii);

b. adding paragraph (c)(2)(iv);

c. revising paragraph (a) of Instruction 2; and

d. revising paragraph (c) of Instruction 3 to read as follows:

Form N–1A

* * * * *

Item 2. Risk/Return Summary: Investments, Risks, and Performance

* * * * *

(c) * * *

(2) * * *

(iii) If the Fund has annual returns for at least one calendar year, provide a table showing the Fund's (A) before-tax average annual total return (without redemption); (B) after-tax average annual total return (without redemption); (C) before-tax average annual total return (with redemption); and (D) after-tax average annual total return (with redemption). A Money Market Fund should show only the returns described in clause (C) of the preceding sentence. All returns should be shown for 1-, 5-, and 10-calendar year periods ending on the date of the most recently completed calendar year (or for the life of the Fund, if shorter), but only for periods subsequent to the effective date of the Fund's registration statement. The table also should show

the returns of an appropriate broad-based securities market index as defined in Instruction 5 to Item 5(b) for the same periods. A Fund that has been in existence for more than 10 years also may include average annual total returns for the life of the Fund. A Money Market Fund may provide the Fund's 7-day yield ending on the date of the most recent calendar year or disclose a toll-free (or collect) telephone number that investors can use to obtain the Fund's current 7-day yield. For a Fund (other than a Money Market Fund or a Fund described in General Instruction C.3.(d)(i)), provide the information in the following table with the specified captions:

AVERAGE ANNUAL TOTAL RETURNS

[For the periods ended December 31, ——]

	1 year	5 years	10 years
If You Continue to Hold Your Shares at End of Period:			
Before-Tax Return	__%	__%	__%
After-Tax Return	__%	__%	__%
If You Sell Your Shares at End of Period:			
Before-Tax Return	__%	__%	__%
After-Tax Return	__%	__%	__%
Index (reflects no deduction for fees, expenses, or taxes)	__%	__%	__%

(iv) Adjacent to the table required by paragraph (c)(2)(iii) of this Item, provide a brief explanation of the following:

(A) The differences among the four types of return presented, including whether the returns reflect redemption and the charges and taxes associated with redemption;

(B) That before-tax returns assume that all distributions are reinvested;

(C) The assumptions used in calculating after-tax returns, including (*1*) the use of the historical highest individual federal marginal income tax rates; (*2*) the assumption that taxes are paid out of fund distributions and that distributions, less taxes, are reinvested; (*3*) the exclusion of state and local taxes; and (*4*) if after-tax returns (with redemption) are higher than before-tax returns (with redemption), explain the reason for this result, including the assumption that a shareholder has sufficient gains from other sources to offset all losses from the redemption of fund shares;

(D) Actual after-tax returns depend on an investor's tax situation and may differ from those shown;

(E) The after-tax returns shown are not relevant to investors who hold their Fund shares through tax-deferred arrangements, such as 401(k) plans or individual retirement accounts; and

(F) After-tax returns reflect past tax effects and are not predictive of future tax effects.

Instructions

* * * * *

2. Table.

(a) Calculate a Money Market Fund's 7-day yield under Item 21(a); the Fund's before-tax average annual total return (without redemption) and before-tax average annual total return (with redemption) under Items 21(b)(1) and (2), respectively; and the Fund's after-tax average annual total return (without redemption) and after-tax average annual total return (with redemption) under Items 21(b)(3) and (4), respectively.

* * * * *

3. Multiple Class Funds.

* * * * *

(c) Provide average annual total returns in the table for each Class offered in the prospectus. The four types of return for each Class required under Item 2(c)(2)(iii)(A), (B), (C), and (D) should be adjacent and should not be interspersed with the returns of other Classes.

* * * * *

9. Item 5 of Form N–1A (referenced in §§ 239.15A and 274.11A) is amended by:

a. revising paragraph (b)(2);

b. adding paragraph (b)(3); and

c. adding Instruction 12 to read as follows:

Form N–1A

* * * * *

Item 5. Management's Discussion of Fund Performance

* * * * *

(b)(1) * * *

(2) Include a statement accompanying the graph to the effect that past performance does not predict future performance and that account value does not reflect the taxes that a shareholder would pay on fund distributions or the redemption of fund shares. In a table placed within or next to the graph, provide the Fund's (i) before-tax average annual total return (without redemption); (ii) after-tax average annual total return (without redemption); (iii) before-tax average annual total return (with redemption); and (iv) after-tax average annual total return (with redemption). All returns should be shown for the 1-, 5-, and 10-year periods as of the end of the last day of the most recent fiscal year (or for the life of the Fund, if shorter), but only for periods subsequent to the effective date of the Fund's registration statement. All returns should be computed in accordance with Items 21(b)(1), (b)(2), (b)(3), and (b)(4). For a Fund other than a Fund described in General Instruction C.3.(d)(i), provide the information in the following table with the specified captions:

AVERAGE ANNUAL TOTAL RETURNS

[For the Fiscal Year ended]

	1 year	5 years	10 years
If You Continue to Hold Your Shares at End of Period:			
Before-Tax Return	__%	__%	__%
After-Tax Return	__%	__%	__%
If You Sell Your Shares at End of Period:			

AVERAGE ANNUAL TOTAL RETURNS—Continued

[For the Fiscal Year ended]

	1 year	5 years	10 years
Before-Tax Return	__%	__%	__%
After-Tax Return	__%	__%	__%

(3) Adjacent to the table required by paragraph (b)(2) of this Item, provide a brief explanation of the following:

(i) The differences among the four types of return presented, including whether the returns reflect redemption and the charges and taxes associated with redemption;

(ii) That before-tax returns assume that all distributions are reinvested;

(iii) The assumptions used in calculating after-tax returns, including (A) the use of the historical highest individual federal marginal income tax rates; (B) the assumption that taxes are paid out of fund distributions and that distributions, less taxes, are reinvested; (C) the exclusion of state and local taxes; and (D) if after-tax returns (with redemption) are higher than before-tax returns (with redemption), explain the reason for this result, including the assumption that a shareholder has sufficient gains from other sources to offset all losses from the redemption of fund shares;

(iv) Actual after-tax returns depend on an investor's tax situation and may differ from those shown;

(v) The after-tax returns shown are not relevant to investors who hold their Fund shares through tax-deferred arrangements, such as 401(k) plans or individual retirement accounts; and

(vi) After-tax returns reflect past tax effects and are not predictive of future tax effects.

Instructions

* * * * *

12. Table for Multiple Class Funds. Provide average annual total returns in the table for each Class of a Multiple Class Fund that is offered in the prospectus or covered by the annual report. The four types of return for each Class required under Item 5(b)(2)(i), (ii), (iii), and (iv) should be adjacent and should not be interspersed with the returns of other Classes.

* * * * *

10. Item 21 of Form N–1A (referenced in §§ 239.15A and 274.11A) is amended by:

a. revising the phrase ''(b)(1)–(4)'' to read ''(b)(1)–(7)'' in the introductory text of paragraph (b);

b. redesignating paragraphs (b)(1), (2), (3), (4), and (5) as paragraphs (b)(2), (5), (6), (7), and (8), respectively;

c. adding new paragraphs (b)(1), (b)(3), and (b)(4); and

d. revising newly redesignated paragraph (b)(2) to read as follows:

Form N–1A

* * * * *

Item 21. Calculation of Performance Data

* * * * *

(b) * * *

(1) *Before-Tax Average Annual Total Return (Without Redemption) Quotation.* For the 1-, 5-, and 10-year periods ended on the date of the most recent balance sheet included in the registration statement (or for the periods the Fund has been in operation), calculate the Fund's before-tax average annual total return (without redemption) by finding the average annual compounded rates of return over the 1-, 5-, and 10-year periods (or for the periods of the Fund's operations) that would equate the initial amount invested to the ending redeemable value, according to the following formula:

$P(1+T)^n = ERV_{NR}$

Where:

P = a hypothetical initial payment of $1,000.

T = before-tax average annual total return (without redemption).

n = number of years.

ERV_{NR} = ending redeemable value of a hypothetical $1,000 payment made at the beginning of the 1-, 5-, or 10-year periods at the end of the 1-, 5-, or 10-year periods (or fractional portion) assuming no redemption of the account.

Instructions

1. Assume the maximum sales load (or other charges deducted from payments) is deducted from the initial $1,000 payment.

2. Assume all distributions by the Fund are reinvested at the price stated in the prospectus (including any sales load imposed upon reinvestment of dividends) on the reinvestment dates during the period.

3. Include all recurring fees that are charged to all shareholder accounts. For any account fees that vary with the size of the account, assume an account size equal to the Fund's mean (or median) account size. Reflect, as appropriate, any recurring fees charged to shareholder accounts that are paid other than by redemption of the Fund's shares.

4. Determine the ending redeemable value by assuming no redemption at the end of the 1-, 5-, or 10-year periods. Deduct any charges that are deducted at the end of each period assuming no redemption. Do not deduct nonrecurring charges deducted only on redemption, such as deferred sales loads or redemption fees.

5. State the before-tax average annual total return (without redemption) quotation to the nearest hundredth of one percent.

(2) *Before-Tax Average Annual Total Return (With Redemption) Quotation.* For the 1-, 5-, and 10-year periods ended on the date of the most recent balance sheet included in the registration statement (or for the periods the Fund has been in operation), calculate the Fund's before-tax average annual total return (with redemption) by finding the average annual compounded rates of return over the 1-, 5-, and 10-year periods (or for the periods of the Fund's operations) that would equate the initial amount invested to the ending redeemable value, according to the following formula:

$P(1+T)^n = ERV_R$

Where:

P = a hypothetical initial payment of $1,000.

T = before-tax average annual total return (with redemption).

n = number of years.

ERV_R = ending redeemable value of a hypothetical $1,000 payment made at the beginning of the 1-, 5-, or 10-year periods at the end of the 1-, 5-, or 10-year periods at the end of the 1-, 5-, or 10-year periods (or fractional portion), assuming the account is redeemed at the end of the last day of the measurement period.

Instructions

1. Assume the maximum sales load (or other charges deducted from payments) is deducted from the initial $1,000 payment.

2. Assume all distributions by the Fund are reinvested at the price stated

in the prospectus (including any sales load imposed upon reinvestment of dividends) on the reinvestment dates during the period.

3. Include all recurring fees that are charged to all shareholder accounts. For any account fees that vary with the size of the account, assume an account size equal to the Fund's mean (or median) account size. Reflect, as appropriate, any recurring fees charged to shareholder accounts that are paid other than by redemption of the Fund's shares.

4. Determine the ending redeemable value by assuming a complete redemption at the end of the 1-, 5-, or 10-year periods and the deduction of all nonrecurring charges deducted at the end of each period. If shareholders are assessed a deferred sales load, assume the maximum deferred sales load is deducted at the times, in the amounts, and under the terms disclosed in the prospectus.

5. State the before-tax average annual total return (with redemption) quotation to the nearest hundredth of one percent.

(3) *After-Tax Average Annual Total Return (Without Redemption) Quotation.* For the 1-, 5-, and 10-year periods ended on the date of the most recent balance sheet included in the registration statement (or for the periods the Fund has been in operation), calculate the Fund's after-tax average annual total return (without redemption) by finding the average annual compounded rates of return over the 1-, 5-, and 10-year periods (or for the periods of the Fund's operations) that would equate the initial amount invested to the after-tax ending value, according to the following formula:

$P(1+T)^n = ATV_{NR}$

Where:

P = a hypothetical initial payment of $1,000.

T = after-tax average annual total return (without redemption).

n = number of years.

ATV_{NR} = ending after-tax value of a hypothetical $1,000 payment made at the beginning of the 1-, 5-, or 10-year periods at the end of the 1-, 5-, or 10-year periods (or fractional portion), assuming no redemption of the account.

Instructions

1. Assume the maximum sales load (or other charges deducted from payments) is deducted from the initial $1,000 payment.

2. Assume all distributions by the Fund, less the taxes due on such distributions, are reinvested at the price stated in the prospectus (including any sales load imposed upon reinvestment of dividends) on the reinvestment dates during the period.

3. Calculate the taxes due on any distributions by the Fund by applying the tax rate specified in Instruction 4 to each component of the distributions on the reinvestment date (*e.g.,* ordinary income, short-term capital gain, long-term capital gain). The taxable amount and tax character of each distribution should be as specified by the Fund on the dividend declaration date, but may be adjusted to reflect subsequent recharacterizations of distributions. Distributions should be adjusted to reflect the federal tax impact the distribution would have on an individual taxpayer on the reinvestment date. For example, assume no taxes are due on the portions of any distribution that would not result in federal income tax on an individual, *e.g.,* tax-exempt interest or non-taxable returns of capital.

4. Calculate the taxes due using the highest individual marginal federal income tax rate in effect on the reinvestment date. The rate used should correspond to the tax character of each component of the distributions (*e.g.,* ordinary income rates for ordinary income distributions, short-term capital gain rates for short-term capital gain distributions, long-term capital gain rates for long-term capital gain distributions). Note that the required tax rates may vary over the measurement period. Disregard any potential tax liabilities other than federal tax liabilities (*e.g.,* state and local taxes); the effect of phaseouts of certain exemptions, deductions, and credits at various income levels; and the impact of the federal alternative minimum tax.

5. Include all recurring fees that are charged to all shareholder accounts. For any account fees that vary with the size of the account, assume an account size equal to the Fund's mean (or median) account size. Assume that no additional taxes or tax credits result from any redemption of shares required to pay such fees. Reflect, as appropriate, any recurring fees charged to shareholder accounts that are paid other than by redemption of the Fund's shares.

6. Determine the ending after-tax value by assuming no redemption at the end of the 1-, 5-, or 10-year periods. Deduct any charges that are deducted at the end of each period assuming no redemption. Do not deduct nonrecurring charges deducted only on redemption, such as deferred sales loads or redemption fees.

7. State the after-tax average annual total return (without redemption) quotation to the nearest hundredth of one percent.

(4) *After-Tax Average Annual Total Return (With Redemption) Quotation.* For the 1-, 5-, and 10-year periods ended on the date of the most recent balance sheet included in the registration statement (or for the periods the Fund has been in operation), calculate the Fund's after-tax average annual total return (with redemption) by finding the average annual compounded rates of return over the 1-, 5-, and 10-year periods (or for the periods of the Fund's operations) that would equate the initial amount invested to the after-tax ending value, according to the following formula:

$P(1 + T)n = ATV_R$

Where:

P = a hypothetical initial payment of $1,000.

T = after-tax average annual total return (with redemption).

n = number of years.

ATV_R = ending after-tax value of a hypothetical $1,000 payment made at the beginning of the 1-, 5-, or 10-year periods at the end of the 1-, 5-, or 10-year periods (or fractional portion), assuming the account is redeemed at the end of the last day of the measurement period.

Instructions

1. Assume the maximum sales load (or other charges deducted from payments) is deducted from the initial $1,000 payment.

2. Assume all distributions by the Fund, less the taxes due on such distributions, are reinvested at the price stated in the prospectus (including any sales load imposed upon reinvestment of dividends) on the reinvestment dates during the period.

3. Calculate the taxes due on any distributions by the Fund by applying the tax rate specified in Instruction 4 to each component of the distributions on the reinvestment date (*e.g.,* ordinary income, short-term capital gain, long-term capital gain). The taxable amount and tax character of each distribution should be as specified by the Fund on the dividend declaration date, but may be adjusted to reflect subsequent recharacterizations of distributions. Distributions should be adjusted to reflect the federal tax impact the distribution would have on an individual taxpayer on the reinvestment date. For example, assume no taxes are due on the portions of any distributions that would not result in federal income tax on an individual, *e.g.,* tax-exempt interest or non-taxable returns of capital.

4. Calculate the taxes due using the highest individual marginal federal

income tax rate in effect on the reinvestment date. The rate used should correspond to the tax character of each component of the distributions (*e.g.,* ordinary income rates for ordinary income distributions, short-term capital gain rates for short-term capital gain distributions, long-term capital gain rates for long-term capital gain distributions). Note that the required tax rates may vary over the measurement period. Disregard any potential tax liabilities other than federal tax liabilities (*e.g.,* state and local taxes); the effect of phaseouts of certain exemptions, deductions, and credits at various income levels; and the impact of the federal alternative minimum tax.

5. Include all recurring fees that are charged to all shareholder accounts. For any account fees that vary with the size of the account, assume an account size equal to the Fund's mean (or median) account size. Assume that no additional taxes or tax credits result from any redemption of shares required to pay such fees. Reflect, as appropriate, any recurring fees charged to shareholder accounts that are paid other than by redemption of the Fund's shares.

6. Determine the ending after-tax value by assuming a complete redemption at the end of the 1-, 5-, or 10-year periods and the deduction of all nonrecurring charges deducted at the end of each period. If shareholders are assessed a deferred sales load, assume the maximum deferred sales load is deducted at the times, in the amounts, and under the terms disclosed in the prospectus.

7. Determine ending after-tax value by subtracting capital gains taxes resulting from the redemption and adding the tax benefit from capital losses resulting from the redemption.

(a) Calculate the capital gain or loss upon redemption by subtracting the tax basis from the redemption proceeds (after deducting any nonrecurring charges as specified by Instruction 6).

(b) In determining the tax basis, include the initial $1,000 payment and reinvested distributions (net of taxes assumed paid from the distributions, but not net of any sales loads imposed upon reinvestment). Also, adjust the tax basis for any distributions representing returns of capital and any other tax basis adjustments that would apply to an individual taxpayer.

(c) When determining the character of capital gain or loss upon redemption, the Fund should track the actual holding periods of reinvested distributions. That is, the Fund should not assume that shares acquired through reinvestment of distributions have the same holding period as the initial $1,000 investment.

(d) Calculate the capital gains taxes (or the benefit resulting from tax losses) by multiplying the amount of the capital gain (loss) by the highest federal individual capital gains tax rate in effect on the redemption date. The rate used should correspond to the tax character of the capital gains (*e.g.,* short-term or long-term), which is determined by the length of the measurement period in the case of the initial $1,000 investment and the length of the period between reinvestment and the end of the measurement period in the case of reinvested distributions.

8. State the after-tax average annual total return quotation (with redemption) to the nearest hundredth of one percent.

* * * * *

By the Commission.

Dated: March 15, 2000.

Margaret H. McFarland,

Deputy Secretary.

[FR Doc. 00–6948 Filed 3–21–00; 8:45 am]

BILLING CODE 8010–01–P

Reader Aids

Federal Register

Vol. 65, No. 56

Wednesday, March 22, 2000

CUSTOMER SERVICE AND INFORMATION

Federal Register/Code of Federal Regulations

General Information, indexes and other finding aids	**202–523–5227**
Laws	**523–5227**
Presidential Documents	
Executive orders and proclamations	**523–5227**
The United States Government Manual	**523–5227**
Other Services	
Electronic and on-line services (voice)	**523–4534**
Privacy Act Compilation	**523–3187**
Public Laws Update Service (numbers, dates, etc.)	**523–6641**
TTY for the deaf-and-hard-of-hearing	**523–5229**

ELECTRONIC RESEARCH

World Wide Web

Full text of the daily Federal Register, CFR and other publications:

http://www.access.gpo.gov/nara

Federal Register information and research tools, including Public Inspection List, indexes, and links to GPO Access:

http://www.nara.gov/fedreg

E-mail

PENS (Public Law Electronic Notification Service) is an E-mail service for notification of recently enacted Public Laws. To subscribe, send E-mail to

listserv@www.gsa.gov

with the text message:

subscribe PUBLAWS-L your name

Use listserv@www.gsa.gov only to subscribe or unsubscribe to PENS. We cannot respond to specific inquiries.

Reference questions. Send questions and comments about the Federal Register system to:

info@fedreg.nara.gov

The Federal Register staff cannot interpret specific documents or regulations.

FEDERAL REGISTER PAGES AND DATE, MARCH

10931–11196 1
11197–11454 2
11455–11734 3
11735–11858 6
11859–12060 7
12061–12426 8
12427–12904 9
12905–13234 10
13235–13658 13
13659–13864 14
13865–14206 15
14207–14430 16
14431–14780 17
14781–15052 20
15053–15202 21
15203–15520 22

CFR PARTS AFFECTED DURING MARCH

At the end of each month, the Office of the Federal Register publishes separately a List of CFR Sections Affected (LSA), which lists parts and sections affected by documents published since the revision date of each title.

3 CFR

Proclamations:
7276 11197
7277 11199
7278 11455
7279 11733
7280 12903
7281 15201

Executive Orders:
12170 (See Notice of March 13, 2000).....13863
12957 (Continued by Notice of March 13, 2000) 13863
12959 (See Notice of March 13, 2000).....13863
13059 (See Notice of March 13, 2000).....13863
13146 11201
13147 13233

Administrative Orders:
Presidential Determinations:
No. 2000-15 of February 24, 2000 10931
Notices:
March 13, 2000 13863

4 CFR

27 15203
28 15203

5 CFR

213 14431
315 14431
335 14431
792 13659

Proposed Rules:
3 14477
213 14477
315 14477

7 CFR

2 12427
205 13512
210 12429
215 12429
220 12429
225 12429
226 12429
301 11203
457 11457
600 14781
601 14781
761 14432
762 14432
915 15203
916 15205
917 15205
993 12061
955 12442
989 15214
1421 13865
1427 13865
1464 10933
1710 .....14207, 14785
1721 10933
3019 14406

Proposed Rules:
6 14478
20 11483
27 10979
28 .....10979, 12140
29 13915
57 14652
97 13917
201 12952
360 14926
1140 10981
1160 14484
1205 12146
1210 14485
1306 12141
1307 12141
1309 12141
1710 12952
1717 12952
1718 12952

8 CFR

212 14774
214 14774
248 14774
278A 14774

9 CFR

74 15216
78 12064
93 15216

Proposed Rules:
71 11485
77 .....11485, 11912
78 11485
93 12486
98 12486
113 12151
130 12486
317 14486
318 .....14486, 14489
319 .....144867, 14489
327 14489
381 14486
590 11486

10 CFR

72 .....11458, 12444, 14790
170 11204
600 14406
820 15218

Proposed Rules:
21 11488
50 11488
52 11488
54 11488
100 11488
430 14128

431 10984
960 11755
963 11755
Ch. XVIII 13700

11 CFR

108 15221

Proposed Rules:

9038 15273

12 CFR

5 12905
204 12916
208 ....14810, 15050
225 ....14433, 14440, 15053
340 14816
701 15224
724 10933
745 10933
925 13866
950 13866
Ch. IX 13663
1510 ....12064, 14819, 15050

Proposed Rules:

3 12320
8 15111
208 12320
225 12320
325 12320
567 12320
614 14491
620 14494
709 11250
716 10988
741 10988
742 15275
1750 13251

13 CFR

Proposed Rules:

124 12955

14 CFR

25 13666
39 ....10934, 10937, 10938, 11204, 11459, 11859, 11861, 12071, 12072, 12073, 12075, 12077, 12080, 12081, 12082, 12084, 12085, 12460, 12462, 12463, 13668, 13871, 13875, 13877, 14207, 14209, 14822, 14826, 14827, 14831, 14834, 14838, 14844, 14846, 14847, 14849, 14852, 15226, 15230, 15232
71 ....11369, 11461, 11866, 12630, 12917, 12918, 14344, 14855, 14856, 14857
95 14442
97 ....13669, 13671, 13673
1260 14406

Proposed Rules:

25 13703
39 ....11006, 11505, 11940, 11942, 12489, 12957, 13251, 13919, 13921, 13923, 14216, 14218, 15278, 15280
71 ....12153, 12957, 13704, 13705, 13707, 14497, 15282
255 11009
108 15113
109 15113
111 15113
129 15113
191 15113

15 CFR

14 14406
734 12919
736 14858
738 ....12919, 14857
740 ....12919, 14857
742 ....12919, 14857
743 12919
744 ....12919, 14444
748 12919
756 ....14857, 14861
762 14858
766 14862
770 14857
774 ....12919, 13879, 14862

16 CFR

1615 12924
1616 12924
1630 12929
1631 12929
1632 12935

Proposed Rules:

307 11944
312 11947
313 11174

17 CFR

15 14452
16 14452
17 14452
1 12466
4 ....10939, 12938
200 12469
240 13235
242 13235

Proposed Rules:

4 ....11253, 12318
228 ....11507, 15043
229 11507
230 ....11507, 15500
232 11507
239 ....11507, 15500
240 11507
248 12354
249 11507
250 11507
259 11507
260 11507
269 11507
270 ....11507, 15500
274 ....11507, 15500

18 CFR

35 12088
157 ....11461, 12115, 15234
380 15234

19 CFR

12 12470
24 13880
111 13880
178 13880

20 CFR

220 14458
322 14459
404 11866
416 11866

21 CFR

20 11881
101 11205
176 13675
177 15057
524 13904
558 11888
640 13678
868 11464
870 11465
1301 13235
1308 13235

Proposed Rules:

101 14219
314 12154

22 CFR

22 14211
23 14211
41 14768
51 14211
139 14764
145 14406
226 14406

Proposed Rules:

22 13253

23 CFR

1340 13679

24 CFR

200 15043
401 15452
402 15452
905 14422

Proposed Rules:

81 12632
990 11525

25 CFR

290 14461

26 CFR

1 ....11205, 11467, 12471
301 ....11211, 11215
602 ....11205, 11211, 11215

Proposed Rules:

1 ....11012, 11269
301 ....11271, 11272

27 CFR

4 11889
5 11889
7 11889
16 11889
75 15058

Proposed Rules:

4 12490
00 15115
70 15115
75 15115
90 15115

28 CFR

70 14406

29 CFR

95 14406
4022 ....14752, 14753
4044 ....13905, 14752
4050 14752

Proposed Rules:

1614 11019
1910 ....11948, 13254

30 CFR

202 11467
206 ....11467, 14022
250 14469

Proposed Rules:

914 ....11950, 12492

31 CFR

103 13683

32 CFR

22 14406
32 14406
668 13906
776 15059

33 CFR

26 14863
95 14223
110 11892
117 ....11893, 12943, 15238
127 10943
140 14226
141 14226
142 14226
143 14226
144 14226
145 14226
146 14226
147 14226
154 10943
155 ....10943, 14470
159 10943
161 14863
164 10943
165 14864
167 12944
177 14223
183 10943

Proposed Rules:

100 ....11274, 13926, 14498
110 ....13926, 14498
165 ....13926, 14498, 14501, 14502, 15283, 15285
175 11410
177 11410
179 11410
181 11410
183 11410

34 CFR

74 14406
1100 11894

Proposed Rules:

606 15115
607 15115
608 15115

36 CFR

1 15077
3 15077
13 15077
Ch. XV 14760
701 ....11735, 11736
1210 14406

Proposed Rules:

212 11680
261 11680
295 11680
1190 12493
1191 12493

37 CFR

1 14864

Proposed Rules:

201 ....14227, 14505

38 CFR

3 12116
19 14471
20 14471
21 ....12117, 13893

Proposed Rules:
3 13254

39 CFR

111 12946
Proposed Rules:
20 11023
111 13258
913 14229
952 13707

40 CFR

9 15090
30 14406
51 11222
52 ..... 10944, 11468, 12118, 12472, 12474, 12476, 12481, 12948, 13239, 13694, 14212, 14873, 15240, 15244
60 13242
63 11231
68 13243
86 11898
136 14344
141 11372
148 14472
180 ..... 10946, 11234, 11243, 11736, 12122, 12129, 15248
261 14472
262 12378
268 14472
271 14472
300 ..... 13697, 14475
302 14472
431 15091
445 14344
Proposed Rules:
51 11024
52 ..... 11027, 11275, 11524, 12494, 12495, 12499, 12958, 13260, 13709, 14506, 14510, 14930, 15286, 15287
63 11278
81 14510
141 11372
438 11755
503 11278

42 CFR

121 15252
405 13911
410 13911
Proposed Rules:
410 13082
493 14510

43 CFR

12 14406
3500 11475

45 CFR

74 14406
400 15410
401 15410
612 11740
613 11740

46 CFR

28 10943
30 10943
32 10943
34 10943
35 10943
38 10943
39 10943
54 10943
56 10943
58 10943
61 10943
63 10943
76 10943
77 10943
78 10943
91 11904
92 10943
95 10943
96 10943
97 10943
105 10943
108 10943
109 10943
110 10943
111 10943
114 10943
115 11904
119 10943
125 10943
132 11904
133 11904
134 11904
151 10943
153 10943
154 10943
160 10943
161 10943
162 10943
163 10943
164 10943
170 10943
174 10943
175 10943
182 10943
189 11904
190 10943
193 10943
195 10943
199 ..... 10943, 11904
515 15252
Proposed Rules:
2 11410
10 11410
15 11410
24 11410
25 11410
26 11410
28 11410
30 11410
70 11410
90 11410
114 11410
169 11410
175 11410
188 11410
199 11410

47 CFR

1 14476
24 14213
27 12483
54 12135
73 ..... 11476, 11477, 11750, 13250
76 12135
Proposed Rules:
1 13933
2 14230
26 14230
27 14230
54 13933
61 13933
69 13933
73 ..... 11537, 11538, 11539, 11540, 11541, 11955, 12155, 13260, 13261

48 CFR

Ch. 2 14380
Ch. 5 11246
202 14397
204 14397
207 14397
208 ..... 14397, 14400
212 14400
222 ..... 14397, 14402
244 14400
247 14400
252 ..... 14397, 14400, 14402
1806 12484
1808 12484
1811 12484
1813 12484
1815 12484
1825 12484
1835 12484
1837 12484
1842 12484
1848 12484
1851 12484
2409 12950
Proposed Rules:
Ch. 9 13416

49 CFR

19 14406
193 10950
350 15092
355 15092
385 11904
571 11751
572 ..... 10961, 15254
Proposed Rules:
Ch I. 11541
40 ..... 13261, 15118
171 11028
172 11028
173 11028
174 11028
175 11028
176 11028
177 11028
178 11028
179 11028
180 11028
190 15290
191 15290
192 15290
195 15290
222 15298
229 15298

50 CFR

17 ..... 14876, 14886, 14896
300 14907
648 ..... 11478, 11909, 15110
660 11480
622 12136
679 ..... 10978, 11247, 11481, 11909, 12137, 12138, 13698, 14918, 14924, 15271, 15272
Proposed Rules:
16 11756
17 ..... 12155, 12181, 13262, 13935, 14513, 14931, 14935
216 11542
223 12959
224 ..... 12959, 13935
300 13284
600 11956
622 ..... 11028, 14518
648 ..... 11029, 11956, 14519
679 ..... 11756, 11973, 12500

REMINDERS

The items in this list were editorially compiled as an aid to Federal Register users. Inclusion or exclusion from this list has no legal significance.

RULES GOING INTO EFFECT MARCH 22, 2000

AGRICULTURE DEPARTMENT

Animal and Plant Health Inspection Service

Exportation and importation of animals and animal products:

African spurred tortoise etc.; published 3-22-00

ENVIRONMENTAL PROTECTION AGENCY

Pesticides; tolerances in food, animal feeds, and raw agricultural commodities:

Cucurbitacins; published 3-22-00

FEDERAL TRADE COMMISSION

Appliances, consumer; energy consumption and water use information in labeling and advertising:

Comparability ranges—

Oil-fired instantaneous water heaters and compact dishwashers; published 12-20-99

GENERAL ACCOUNTING OFFICE

Personnel Appeals Board; procedural rules; published 3-22-00

TRANSPORTATION DEPARTMENT

Federal Aviation Administration

Airworthiness directives:

Boeing; published 3-7-00

Dornier; published 3-7-00

McDonnell Douglas; published 2-16-00

COMMENTS DUE NEXT WEEK

AGRICULTURE DEPARTMENT

Agricultural Marketing Service

Cotton classing, testing, and standards:

Upland cotton; official color grade determination; comments due by 3-31-00; published 3-1-00

Raisins produced from grapes grown in—

California; comments due by 3-31-00; published 1-31-00

AGRICULTURE DEPARTMENT

Animal and Plant Health Inspection Service

Exportation and importation of animals and animal products:

Canine and equine semen from Canada; comments due by 3-27-00; published 1-26-00

AGRICULTURE DEPARTMENT

Forest Service

Alaska National Interest Lands Conservation Act:

TItle VII implementation (subsistence priority)

Kenai Peninsula determination; comments due by 3-31-00; published 2-22-00

Alaska National Interest Lands Conservation Act; Title VIII implementation (subsistence priority):

Fish and wildlife; subsistence taking; comments due by 3-27-00; published 2-2-00

COMMERCE DEPARTMENT

Anticybersquatting Consumer Protection Act; abusive domain registrations involving personal names; resolution issues; comments due by 3-30-00; published 2-29-00

COMMERCE DEPARTMENT

National Oceanic and Atmospheric Administration

Fishery conservation and management:

Northeastern United States fisheries—

Deep-sea red crab; comments due by 3-31-00; published 3-1-00

Deep-sea red crab; correction; comments due by 3-31-00; published 3-17-00

DEFENSE DEPARTMENT

Federal Acquisition Regulation (FAR):

Deferred research and development costs; comments due by 3-27-00; published 1-26-00

Drafting principles; comments due by 3-27-00; published 1-26-00

ENERGY DEPARTMENT

Energy Efficiency and Renewable Energy Office

Energy conservation:

Weatherization assistance program for low-income persons; comments due by 3-27-00; published 1-26-00

ENVIRONMENTAL PROTECTION AGENCY

Air programs:

Stratospheric ozone protection—

Essential-use allowances ; allocation; comments due by 3-27-00; published 2-25-00

Air programs; approval and promulgation; State plans for designated facilities and pollutants:

Georgia; comments due by 3-27-00; published 2-25-00

Air quality implementation plans; approval and promulgation; various States:

California; comments due by 3-29-00; published 3-14-00

New Mexico; comments due by 3-29-00; published 2-28-00

Hazardous waste program authorizations:

Louisiana; comments due by 3-29-00; published 2-28-00

Missouri; comments due by 3-29-00; published 2-28-00

FEDERAL COMMUNICATIONS COMMISSION

Common carrier services:

Local exchange carriers, low-volume long distance users, and Federal-State Joint Board on Universal Service—

Access charge reform and price cap performance review; comments due by 3-30-00; published 3-15-00

Radio stations; table of assignments:

Alabama and Florida; comments due by 3-27-00; published 2-16-00

Texas; comments due by 3-27-00; published 2-16-00

Television broadcasting:

Broadcast licensees; public interest obligations; comments due by 3-27-00; published 1-26-00

FEDERAL DEPOSIT INSURANCE CORPORATION

Consumer financial information privacy; comments due by 3-31-00; published 2-22-00

FEDERAL RESERVE SYSTEM

Consumer financial information privacy; comments due by 3-31-00; published 2-22-00

FEDERAL TRADE COMMISSION

Consumer financial information; privacy requirements; comments due by 3-31-00; published 3-1-00

GENERAL SERVICES ADMINISTRATION

Federal Acquisition Regulation (FAR):

Deferred research and development costs; comments due by 3-27-00; published 1-26-00

Drafting principles; comments due by 3-27-00; published 1-26-00

INTERIOR DEPARTMENT

Fish and Wildlife Service

Alaska National Interest Lands Conservation Act:

Fish and wildlife resources on public lands; preference for subsistence use—

Kenai Peninsula; comments due by 3-31-00; published 2-22-00

Alaska National Interest Lands Conservation Act; Title VIII implementation (subsistence priority):

Fish and wildlife; subsistence taking; comments due by 3-27-00; published 2-2-00

Endangered and threatened species:

Columbian sharp-tailed grouse; status review; comments due by 3-27-00; published 1-24-00

Tidewater goby; comments due by 3-31-00; published 2-15-00

LIBRARY OF CONGRESS

Copyright Office, Library of Congress

Digital Millennium Copyright Act:

Circumvention of copyright protection systems for access control technologies; exemption to prohibition; comments due by 3-31-00; published 3-17-00

NATIONAL AERONAUTICS AND SPACE ADMINISTRATION

Federal Acquisition Regulation (FAR):

Deferred research and development costs; comments due by 3-27-00; published 1-26-00

Drafting principles; comments due by 3-27-00; published 1-26-00

NATIONAL CREDIT UNION ADMINISTRATION

Credit unions:

Consumer financial information; privacy requirements; comments due by 3-31-00; published 3-1-00

PERSONNEL MANAGEMENT OFFICE

Absence and leave:

Sick leave for family care purposes; comments due by 3-27-00; published 2-9-00

Prevailing rate systems; comments due by 3-30-00; published 2-29-00

POSTAL SERVICE

International Mail Manual:

International surface mail; postal rate changes; comments due by 3-31-00; published 3-1-00

SECURITIES AND EXCHANGE COMMISSION

Practice and procedure:

Market information fees and revenues; public dissemination; comments due by 3-31-00; published 12-17-99

Privacy of Consumer Financial Information (Regulation S-P); comments due by 3-31-00; published 3-8-00

Securities:

Selective disclosure and insider trading; comments due by 3-29-00; published 12-28-99

SMALL BUSINESS ADMINISTRATION

Small business size standards:

Compliance with other agency programs; comments due by 3-27-00; published 1-26-00

TRANSPORTATION DEPARTMENT

Federal Aviation Administration

Airworthiness directives:

Agusta S.p.A.; comments due by 3-27-00; published 1-26-00

Airbus; comments due by 3-27-00; published 2-24-00

Alexander Schleicher Segelflugzeugbau; comments due by 3-31-00; published 3-1-00

Empresa Brasileira de Aeronautica S.A.; comments due by 3-27-00; published 2-24-00

Eurocopter Deutschland GMBH; comments due by 3-27-00; published 1-25-00

Airworthiness standards:

Special conditions—

McDonnell Douglas Model MD-10-10/10F and MD10-30/30F airplanes; comments due by 3-27-00; published 2-25-00

Transport airplane fuel tank system design review, flammability reduction, and maintenance and inspection requirements; comments due by 3-27-00; published 2-16-00

TRANSPORTATION DEPARTMENT

Research and Special Programs Administration

Hazardous materials:

Hazardous materials transportation—

Compatibility with International Atomic Energy Agency regulations; comments due by 3-29-00; published 12-28-99

TREASURY DEPARTMENT

Comptroller of the Currency

Consumer financial information privacy; comments due by 3-31-00; published 2-22-00

TREASURY DEPARTMENT

Customs Service

Country of origin marking; comments due by 3-27-00; published 1-26-00

TREASURY DEPARTMENT

Internal Revenue Service

Income taxes:

Source of compensation for labor or personal services; comments due by 3-29-00; published 1-21-00

Procedure and administration:

Combat zone service and Presidentially declared disaster; tax-related deadline relief; comments due by 3-30-00; published 12-30-99

TREASURY DEPARTMENT

Thrift Supervision Office

Consumer financial information privacy; comments due by 3-31-00; published 2-22-00

LIST OF PUBLIC LAWS

This is a continuing list of public bills from the current session of Congress which have become Federal laws. It may be used in conjunction with ''P L U S'' (Public Laws Update Service) on 202–523–6641. This list is also available online at http://www.nara.gov/fedreg.

The text of laws is not published in the **Federal Register** but may be ordered in ''slip law'' (individual pamphlet) form from the Superintendent of Documents, U.S. Government Printing Office, Washington, DC 20402 (phone, 202–512–1808). The text will also be made available on the Internet from GPO Access at http://www.access.gpo.gov/nara/index.html. Some laws may not yet be available.

S. 376/P.L. 106–180

Open-market Reorganization for the Betterment of International Telecommunications Act (Mar. 17, 2000; 114 Stat. 48)

Last List March 16, 2000

Public Laws Electronic Notification Service (PENS)

PENS is a free electronic mail notification service of newly enacted public laws. To subscribe, go to www.gsa.gov/archives/publaws-l.html or send E-mail to **listserv@www.gsa.gov** with the following text message:

SUBSCRIBE PUBLAWS-L Your Name.

Note: This service is strictly for E-mail notification of new laws. The text of laws is not available through this service. **PENS** cannot respond to specific inquiries sent to this address.