AUTHENTICATED
U.S. GOVERNMENT
INFORMATION
GPO

Federal Register

4–6–00 Thursday
Vol. 65 No. 67 Apr. 6, 2000
Pages 17987–18220

The **FEDERAL REGISTER** is published daily, Monday through Friday, except official holidays, by the Office of the Federal Register, National Archives and Records Administration, Washington, DC 20408, under the Federal Register Act (44 U.S.C. Ch. 15) and the regulations of the Administrative Committee of the Federal Register (1 CFR Ch. I). The Superintendent of Documents, U.S. Government Printing Office, Washington, DC 20402 is the exclusive distributor of the official edition.

The **Federal Register** provides a uniform system for making available to the public regulations and legal notices issued by Federal agencies. These include Presidential proclamations and Executive Orders, Federal agency documents having general applicability and legal effect, documents required to be published by act of Congress, and other Federal agency documents of public interest.

Documents are on file for public inspection in the Office of the Federal Register the day before they are published, unless the issuing agency requests earlier filing. For a list of documents currently on file for public inspection, see http://www.nara.gov/fedreg.

The seal of the National Archives and Records Administration authenticates the Federal Register as the official serial publication established under the Federal Register Act. Under 44 U.S.C. 1507, the contents of the **Federal Register** shall be judicially noticed.

The **Federal Register** is published in paper and on 24x microfiche. It is also available online at no charge as one of the databases on GPO Access, a service of the U.S. Government Printing Office.

The online edition of the **Federal Register** is issued under the authority of the Administrative Committee of the Federal Register as the official legal equivalent of the paper and microfiche editions (44 U.S.C. 4101 and 1 CFR 5.10). It is updated by 6 a.m. each day the **Federal Register** is published and it includes both text and graphics from Volume 59, Number 1 (January 2, 1994) forward.

GPO Access users can choose to retrieve online **Federal Register** documents as TEXT (ASCII text, graphics omitted), PDF (Adobe Portable Document Format, including full text and all graphics), or SUMMARY (abbreviated text) files. Users should carefully check retrieved material to ensure that documents were properly downloaded.

On the World Wide Web, connect to the **Federal Register** at http://www.access.gpo.gov/nara. Those without World Wide Web access can also connect with a local WAIS client, by Telnet to swais.access.gpo.gov, or by dialing (202) 512-1661 with a computer and modem. When using Telnet or modem, type swais, then log in as guest with no password.

For more information about GPO Access, contact the GPO Access User Support Team by E-mail at gpoaccess@gpo.gov; by fax at (202) 512–1262; or call (202) 512–1530 or 1–888–293–6498 (toll free) between 7 a.m. and 5 p.m. Eastern time, Monday–Friday, except Federal holidays.

The annual subscription price for the **Federal Register** paper edition is $555, or $607 for a combined **Federal Register,** Federal Register Index and List of CFR Sections Affected (LSA) subscription; the microfiche edition of the **Federal Register** including the Federal Register Index and LSA is $220. Six month subscriptions are available for one-half the annual rate. The charge for individual copies in paper form is $8.00 for each issue, or $8.00 for each group of pages as actually bound; or $1.50 for each issue in microfiche form. All prices include regular domestic postage and handling. International customers please add 25% for foreign handling. Remit check or money order, made payable to the Superintendent of Documents, or charge to your GPO Deposit Account, VISA, MasterCard or Discover. Mail to: New Orders, Superintendent of Documents, P.O. Box 371954, Pittsburgh, PA 15250–7954.

There are no restrictions on the republication of material appearing in the **Federal Register.**

How To Cite This Publication: Use the volume number and the page number. Example: 65 FR 12345.

SUBSCRIPTIONS AND COPIES

PUBLIC	
Subscriptions:	
Paper or fiche	**202–512–1800**
Assistance with public subscriptions	**512–1806**
General online information	**202–512–1530; 1–888–293–6498**
Single copies/back copies:	
Paper or fiche	**512–1800**
Assistance with public single copies	**512–1803**
FEDERAL AGENCIES	
Subscriptions:	
Paper or fiche	**523–5243**
Assistance with Federal agency subscriptions	**523–5243**

FEDERAL REGISTER WORKSHOP

THE FEDERAL REGISTER: WHAT IT IS AND HOW TO USE IT

FOR: Any person who uses the Federal Register and Code of Federal Regulations.

WHO: Sponsored by the Office of the Federal Register.

WHAT: Free public briefings (approximately 3 hours) to present:

1. The regulatory process, with a focus on the Federal Register system and the public's role in the development regulations.
2. The relationship between the Federal Register and Code of Federal Regulations.
3. The important elements of typical Federal Register documents.
4. An introduction to the finding aids of the FR/CFR system.

WHY: To provide the public with access to information necessary to research Federal agency regulations which directly affect them. There will be no discussion of specific agency regulations.

WASHINGTON, DC

WHEN: April 18, 2000

WHERE: Conference Room, Suite 700
Office of the Federal Register
800 North Capitol Street, NW.
Washington, DC
(3 blocks north of Union Station Metro)

RESERVATIONS: 202–523–4538

Printed on recycled paper.

Contents

Federal Register

Vol. 65, No. 67

Thursday, April 6, 2000

Advisory Commission on Electronic Commerce
See Electronic Commerce Advisory Commission

Agency for International Development
NOTICES
Agency information collection activities:
Submission for OMB review; comment request, 18031

Agriculture Department
See Natural Resources Conservation Service

Centers for Disease Control and Prevention
NOTICES
Meetings:
National Center for Infectious Diseases—
Scientific Counselors Board, 18108–18109

Children and Families Administration
NOTICES
Agency information collection activities:
Submission for OMB review; comment request, 18109
Grant and cooperative agreement awards:
University of Colorado Health Sciences Center, 18109–18110
Senior Executive Service:
Performance Review Boards; membership, 18110

Civil Rights Commission
NOTICES
Meetings; Sunshine Act, 18032

Commerce Department
See Economics and Statistics Administration
See International Trade Administration
See National Oceanic and Atmospheric Administration
See Patent and Trademark Office
NOTICES
Anticybersquatting Consumer Protection Act; abusive domain registrations involving personal names; dispute resolution issues, 18032

Comptroller of the Currency
NOTICES
Agency information collection activities:
Proposed collection; comment request, 18148–18149

Consumer Product Safety Commission
NOTICES
Meetings; Sunshine Act, 18074–18075

Customs Service
NOTICES
Customs brokerage, cartage, and lighterage districts; geographic boundaries; correction, 18151

Defense Department
RULES
Vocational rehabilitation and education:
Veterans education—
Educational Assistance Test Program; increased allowances; correction, 18151

Economics and Statistics Administration
NOTICES
Meetings:
Economic Analysis Bureau Advisory Committee, 18033

Education Department
RULES
Postsecondary education:
Federal Perkins Loan Program, 18001–18003
Special education and rehabilitative services:
Projects with Industry Program, 18214–18220
NOTICES
Agency information collection activities:
Proposed collection; comment request, 18075
Grants and cooperative agreements; availability, etc.:
Elementary and secondary education—
Safe and Drug-Free Schools and Communities National Programs, 18188–18189, 18192–18193, 18196–18197, 18200–18201, 18204–18205
Postsecondary education—
Teacher Quality Enhancement Program, 18075–18076
Meetings:
President's Board of Advisors on Historically Black Colleges and Universities, 18076

Electronic Commerce Advisory Commission
NOTICES
Meetings; cancellation, 18031

Employment and Training Administration
NOTICES
Agency information collection activities:
Proposed collection; comment request, 18125–18132
Environmental statements; availability, etc.:
Hartford, CT; new Job Corps Center off Overlook Terrace, 18132
Wilmington, DE; new Job Corps Center at 9 Vandever Avenue, 18132

Energy Department
See Federal Energy Regulatory Commission
See Hearings and Appeals Office, Energy Department

Environmental Protection Agency
RULES
Air quality implementation plans; approval and promulgation; various States:
California, 18008–18009
Texas, 18003–18008
PROPOSED RULES
Air quality implementation plans; approval and promulgation; various States:
Texas, 18014
Solid wastes:
Alternative liner performance, leachate recirculation, and bioreactor landfills; information and data request, 18014–18018
Toxic substances:
Polychlorinated biphenyls (PCBs)—
Non-liquid PCBs; use authorization and distribution in commerce, 18018–18020

NOTICES
Committees; establishment, renewal, termination, etc.:
Environmental Policy and Technology National Advisory Council, 18091–18092
Meetings:
Acute Exposure Guideline Levels for Hazardous Substances National Advisory Committee, 18092–18093
Alternative-fueled vehicles; infrastructure issues, 18093–18094
Clean Air Act Advisory Committee, 18094–18095
Science Advisory Board, 18095–18096
Superfund; response and remedial actions, proposed settlements, etc.:
C&J Disposal Site, NY, 18096–18097
Toxic and hazardous substances control:
Citizens' petitions—
People for Ethical Treatment of Animals et al., 18097–18101
State implementation plans; adequacy status for transportation conformity purposes—
Arizona, 18101
Test marketing exemption approvals, 18101–18103

Federal Aviation Administration
RULES
Airworthiness directives:
Robinson Helicopter Co., 17987–17990
Standard instrument approach procedures, 17990–17994
PROPOSED RULES
Airworthiness directives:
Eurocopter Deutschland, 18010–18014

Federal Communications Commission
NOTICES
Privacy Act:
Systems of records, 18103–18106

Federal Election Commission
NOTICES
Meetings; Sunshine Act, 18106

Federal Emergency Management Agency
NOTICES
Disaster and emergency areas:
Alabama, 18106–18107
Georgia, 18107
Virginia, 18107
Meetings:
Technical Mapping Advisory Council, 18107–18108

Federal Energy Regulatory Commission
NOTICES
Environmental statements; availability, etc.:
Minnesota Power, Inc., 18080
Tennessee Gas Pipeline Co., 18085–18086
Transcontinental Gas Pipe Line Corp. et al., 18084
Hydroelectric applications, 18086–18089
Applications, hearings, determinations, etc.:
American Energy Savings, Inc., 18076–18077
Black Marlin Pipeline Co. et al., 18077
Colorado Interstate Gas Co., 18077–18078
Equitrans, L.P., 18078
Horizon Pipeline Co., L.L.C., 18078–18080
National Fuel Gas Supply Corp., 18080–18081
Natural Gas Pipeline Co. of America, 18081–18082
Northern Natural Gas Co., 18082–18083
Southwestern Public Service Co., 18083
Texas Gas Transmission Corp. et al., 18083–18084
Transwestern Pipeline Co., 18084–18085

Federal Highway Administration
NOTICES
Environmental statements; notice of intent:
Douglas and Franklin Counties, KS, 18145

Federal Mine Safety and Health Review Commission
NOTICES
Privacy Act:
Systems of records, 18134–18139

Federal Reserve System
NOTICES
Banks and bank holding companies:
Change in bank control, 18108
Formations, acquisitions, and mergers, 18108

Federal Trade Commission
NOTICES
Meetings:
Borderless online marketplace; consumer transactions; alternative dispute resolution; public workshop, 18032–18033

Fish and Wildlife Service
PROPOSED RULES
Endangered and threatened species:
Findings on petitions, etc.—
Vernal pool fairy shrimp and tadpole shrimp, 18026–18028
NOTICES
Environmental statements; availability, etc.:
Incidental take permits—
Houston toad, 18121

Food and Drug Administration
NOTICES
Agency information collection activities:
Proposed collection; comment request, 18110–18111
Submission for OMB review; comment request, 18111–18112
Meetings:
Gastrointestinal Drugs Advisory Committee, 18113

Health and Human Services Department
See Centers for Disease Control and Prevention
See Children and Families Administration
See Food and Drug Administration
See Health Resources and Services Administration
See Indian Health Service

Health Resources and Services Administration
NOTICES
Agency information collection activities:
Submission for OMB review; comment request, 18113–18114
National Vaccine Injury Compensation Program:
Petitions received, 18114–18120

Hearings and Appeals Office, Energy Department
NOTICES
Special refund procedures; implementation, 18089–18091

Indian Health Service
NOTICES
Agency information collection activities:
Proposed collection; comment request, 18120–18121

Interior Department
See Fish and Wildlife Service
See Land Management Bureau
See National Park Service

Internal Revenue Service
NOTICES
Agency information collection activities:
Proposed collection; comment request, 18149

International Trade Administration
NOTICES
Antidumping:
Antifriction bearings (other than tapered roller bearings) and parts from—
Various countries, 18033–18043
Carbon steel plate from—
Taiwan, 18043–18044
Cold-rolled and corrosion-resistant carbon steel flat products from—
Korea, 18044–18046
Cold-rolled carbon-quality steel flat products from—
Venezuela, 18047–18049
Cold-rolled carbon steel flat products from—
Germany, 18046–18047
Corrosion-resistant carbon steel flat products from—
Australia, 18049–18050
France, 18050–18051
Germany, 18051–18052
Cut-to-length carbon steel plate from—
Brazil and Mexico, 18052–18054
Germany, 18055–18056
Spain and United Kingdom, 18056–18057
Various countries, 18054–18055
Forged stainless steel flanges from—
India and Taiwan, 18058–18059
Manganese metal from—
China, 18059
Sparklers from—
China, 18059–18062
Welded stainless steel pipe from—
Taiwan, 18062
Antidumping and countervailing duties:
Five-year (sunset) reviews—
Final results; time limit extension, 18058
Countervailing duties:
Corrosion-resistant carbon steel flat products from—
France, 18063–18065
Cut-to-length carbon steel plate from—
Belgium, 18066–18067
Brazil, 18065–18066
Mexico, 18067–18069
Pasta from—
Italy, 18069–18070
Sulfanilic acid from—
India; correction, 18070
Welded carbon steel pipes and tubes from—
Turkey, 18070–18074
Meetings:
Borderless online marketplace; consumer transactions; alternative dispute resolution; public workshop, 18032–18033
Applications, hearings, determinations, etc.:
LDS Hospital, Salt Lake City, UT, 18062–18063

Justice Department
See Justice Programs Office

Justice Programs Office
NOTICES
Agency information collection activities:
Submission for OMB review; comment request, 18123–18124

Labor Department
See Employment and Training Administration
See Pension and Welfare Benefits Administration
NOTICES
Agency information collection activities:
Submission for OMB review; comment request, 18124–18125

Land Management Bureau
NOTICES
Environmental statements; availability, etc.:
South Baggs Area Natural Gas Development Project, WY, 18121–18122
Sublette County, WY; Jonah Field II Natural Gas Project, 18122
Public land orders:
California; correction, 18122

Maritime Administration
NOTICES
Coastwise trade laws; waivers:
HAGGAI, 18145–18146

Mine Safety and Health Federal Review Commission
See Federal Mine Safety and Health Review Commission

National Oceanic and Atmospheric Administration
PROPOSED RULES
Fishery conservation and management:
Alaska; fisheries of Exclusive Economic Zone—
Bering Sea and Aleutian Islands and Gulf of Alaska groundfish, 18028–18030
NOTICES
Environmental statements; availability, etc.:
Alaska; fisheries of Exclusive Economic Zone—
Bering Sea and Aleutian Islands and Gulf of Alaska groundfish, 18074

National Park Service
NOTICES
Agency information collection activities:
Submission for OMB review; comment request, 18122–18123

National Science Foundation
NOTICES
Meetings:
Geosciences Special Emphasis Panel, 18139–18140
Polar Programs Advisory Committee, 18140
Small Business Industrial Innovation Advisory Committee, 18140
Undergraduate Education Special Emphasis Panel, 18140–18141

Natural Resources Conservation Service
NOTICES
Field office technical guides; changes:
New York, 18031

Nuclear Regulatory Commission
PROPOSED RULES
Radioactive material packaging and transportation:
Nuclear waste shipments; advance notification to Native American Tribes, 18010
NOTICES
Applications, hearings, determinations, etc.:
Energy Department, 18141
Tennessee Valley Authority, 18141–18143

Patent and Trademark Office
PROPOSED RULES
Patent cases:
American Inventors Protection Act; implementation—
Inter Partes reexamination proceedings, optional, 18154–18186

Pension and Welfare Benefits Administration
NOTICES
Employee benefit plans; prohibited transaction exemptions:
General Electric et al., 18132–18134
Employee Retirement Income Security Act:
Agency policy and operational objectives; strategic enforcement plan, 18208–18212

Personnel Management Office
NOTICES
Agency information collection activities:
Proposed collection; comment request, 18143

Public Health Service
See Centers for Disease Control and Prevention
See Food and Drug Administration
See Health Resources and Services Administration
See Indian Health Service

Research and Special Programs Administration
PROPOSED RULES
Pipeline safety:
Hazardous liquid transportation—
Areas unusually sensitive to environmental damage; workshop and technical review, 18020–18021

Social Security Administration
RULES
Social security benefits and supplemental security income:
Federal old-age, survivors, and disability insurance, and aged, blind, and disabled—
Age; clarification as vocational factor, 17994–18001
NOTICES
Social security acquiescence rulings:
Patterson v. Bowen; rescission of ruling, 18143–18144
Preslar v. Health and Human Services Secretary et al; rescission of rulings, 18144–18145

State Department
NOTICES
Art objects; importation for exhibition:
1900: Art at the Crossroads, 18145

Surface Transportation Board
PROPOSED RULES
Practice and procedure:
Combinations and ownership—
Major rail consolidation procedures, 18021–18026

Transportation Department
See Federal Aviation Administration
See Federal Highway Administration
See Maritime Administration
See Research and Special Programs Administration
See Surface Transportation Board

Treasury Department
See Comptroller of the Currency
See Customs Service
See Internal Revenue Service
NOTICES
Agency information collection activities:
Submission for OMB review; comment request, 18146–18148

Veterans Affairs Department
RULES
Vocational rehabilitation and education:
Veterans education—
Educational Assistance Test Program; increased allowances; correction, 18151
NOTICES
Agency information collection activities:
Proposed collection; comment request, 18150

Separate Parts In This Issue

Part II
Department of Commerce, Patent and Trademark Office, 18153–18186

Part III
Department of Education, 18187–18189

Part IV
Department of Education, 18191–18193

Part V
Department of Education, 18195–18197

Part VI
Department of Education, 18199–18201

Part VII
Department of Education, 18203–18205

Part VIII
Department of Labor, Pension and Welfare Benefits Administration, 18207–18212

Part IX
Department of Education, 18213–18220

Reader Aids
Consult the Reader Aids section at the end of this issue for phone numbers, online resources, finding aids, reminders, and notice of recently enacted public laws.

CFR PARTS AFFECTED IN THIS ISSUE

A cumulative list of the parts affected this month can be found in the Reader Aids section at the end of this issue.

10 CFR

Proposed Rules:

71 18010
73 18010

14 CFR

39 17987
97 (2 documents) 17990, 17991

Proposed Rules:

39 18010

20 CFR

404 17994
416 17994

34 CFR

379 18214
674 18001

37 CFR

Proposed Rules:

1 18154

38 CFR

21 18151

40 CFR

52 (3 documents) 18003, 18008, 18009

Proposed Rules:

52 18014
258 18014
761 18018

49 CFR

Proposed Rules:

195 18020
1180 18021

50 CFR

Proposed Rules:

17 18026
679 18028

Rules and Regulations

Federal Register
Vol. 65, No. 67
Thursday, April 6, 2000

This section of the FEDERAL REGISTER contains regulatory documents having general applicability and legal effect, most of which are keyed to and codified in the Code of Federal Regulations, which is published under 50 titles pursuant to 44 U.S.C. 1510.

The Code of Federal Regulations is sold by the Superintendent of Documents. Prices of new books are listed in the first FEDERAL REGISTER issue of each week.

DEPARTMENT OF TRANSPORTATION

Federal Aviation Administration

14 CFR Part 39

[Docket No. 99–SW–08–AD; Amendment 39–11657; AD 2000–07–03]

RIN 2120–AA64

Airworthiness Directives; Robinson Helicopter Company Model R44 Helicopters

AGENCY: Federal Aviation Administration, DOT.

ACTION: Final rule.

SUMMARY: This amendment adopts a new airworthiness directive (AD), applicable to Robinson Helicopter Company (Robinson) Model R44 helicopters, that requires inspecting the wire harness for contact with the fuel line assembly, removing and replacing the fuel line assembly if chafing has occurred, and installing spiral wrap tubing on the fuel line assembly. This amendment is prompted by four incidents of contact between the wire harness and the fuel line assembly. The actions specified by this AD are intended to prevent contact between the wire harness and the fuel line, which could result in chafing of the wire harness and a potential fire hazard.

EFFECTIVE DATE: May 11, 2000.

FOR FURTHER INFORMATION CONTACT: Elizabeth Bumann, Aerospace Engineer, FAA, Los Angeles Aircraft Certification Office, 3960 Paramount Blvd., Lakewood, California 90712–4137, telephone (562) 627–5265; fax (562) 627–5210.

SUPPLEMENTARY INFORMATION: A proposal to amend part 39 of the Federal Aviation Regulations (14 CFR part 39) to include an AD that is applicable to Robinson Model R44 helicopters was published in the **Federal Register** on August 11, 1999 (64 FR 43638). That action proposed inspecting the wire harness for contact with the fuel line assembly, removing and replacing the fuel line assembly if chafing has occurred, and installing spiral wrap tubing on the fuel line assembly.

Interested persons have been afforded an opportunity to participate in the making of this amendment. Due consideration has been given to the comments received.

The one commenter states that the proposed AD does not mention repair or replacement of the wire harness if chafing damaged the loom. The commenter also states that there are no instructions for ensuring proper clearance between the wire bundle and wrapped fuel pipe. The proposed AD would require inspection of the wire harness for chafing, and maintenance regulations require that the aircraft be restored to an airworthy condition before being returned to service. In order for the aircraft to be in an airworthy condition, a chafed wire harness must be replaced and proper clearance ensured. The FAA has therefore determined that it is not necessary to revise the requirements of the AD in response to these comments. However, for information only, a note 3 has been added to refer the reader to an acceptable method of replacing the wire harness.

After careful review of the available data, including the comments noted above, the FAA has determined that air safety and the public interest require the adoption of the rule with the change described previously. The FAA has determined that this change will neither increase the economic burden on any operator nor increase the scope of the AD.

The FAA estimates that 200 helicopters of U.S. registry will be affected by this AD, that it will take approximately 0.3 work hour per helicopter to accomplish the required actions, and that the average labor rate is $60 per work hour. Required parts will cost approximately $0.22 per helicopter. Based on these figures, the total cost impact of the AD on U.S. operators is estimated to be $3,644.

The regulations adopted herein will not have a substantial direct effect on the States, on the relationship between the national Government and the States, or on the distribution of power and responsibilities among the various levels of government. Therefore, it is determined that this final rule does not have federalism implications under Executive Order 13132.

For the reasons discussed above, I certify that this action (1) is not a ''significant regulatory action'' under Executive Order 12866; (2) is not a ''significant rule'' under DOT Regulatory Policies and Procedures (44 FR 11034, February 26, 1979); and (3) will not have a significant economic impact, positive or negative, on a substantial number of small entities under the criteria of the Regulatory Flexibility Act. A final evaluation has been prepared for this action and it is contained in the Rules Docket. A copy of it may be obtained from the Rules Docket at the location provided under the caption **ADDRESSES**.

List of Subjects in 14 CFR Part 39

Air transportation, Aircraft, Aviation safety, Safety.

Adoption of the Amendment

Accordingly, pursuant to the authority delegated to me by the Administrator, the Federal Aviation Administration amends part 39 of the Federal Aviation Regulations (14 CFR part 39) as follows:

PART 39—AIRWORTHINESS DIRECTIVES

1. The authority citation for part 39 continues to read as follows:

Authority: 49 U.S.C. 106(g), 40113, 44701.

§ 39.13 [Amended]

2. Section 39.13 is amended by adding a new airworthiness directive to read as follows:

AD 2000–07–03 Robinson Helicopter Company: Amendment 39–11657. Docket No. 99–SW–08–AD.

Applicability: Model R44 helicopters, serial numbers 0002 through 0462, certificated in any category.

Note 1: This AD applies to each helicopter identified in the preceding applicability provision, regardless of whether it has been otherwise modified, altered, or repaired in the area subject to the requirements of this AD. For helicopters that have been modified, altered, or repaired so that the performance of the requirements of this AD is affected, the owner/operator must request approval for an alternative method of compliance in accordance with paragraph (e) of this AD. The request should include an assessment of

the effect of the modification, alteration, or repair on the unsafe condition addressed by this AD; and if the unsafe condition has not been eliminated, the request should include specific proposed actions to address it.

Compliance: Required within 100 hours time-in-service or 90 calendar days after the effective date of this AD, whichever occurs first, unless accomplished previously.

To prevent contact between the wire harness and the fuel line assembly, which could result in chafing of the wire harness and a potential fire hazard, accomplish the following:

(a) Remove the cover, part number (P/N) C474–1, from between the rear seatbacks.

(b) Inspect the wire harness, P/N C059, and the fuel line assembly, P/N C726–2, above the fuel shutoff valve for contact. If the wire harness contacts the fuel line assembly, inspect for chafing.

(c) If chafing has occurred between the wire harness and the fuel line assembly, replace the fuel line with an airworthy fuel line assembly. Torque the fuel line nuts to 110–130 in-lbs. Verify that clearance exists between the fuel line assembly and the wire harness.

(d) Install a 3-inch section of spiral wrap tubing, P/N B161–8, on the fuel line assembly as shown in Figure 1. Push the spiral wrap tubing down until it is against the fuel line fitting.

Note 2: Robinson Helicopter Company Service Bulletin SB–31, dated October 28, 1998, pertains to the subject of this AD.

Note 3: Advisory Circular 43.13–1B, Chapter 11, describes procedures acceptable for replacing the wire harness if required.

BILLING CODE 4910–13–U

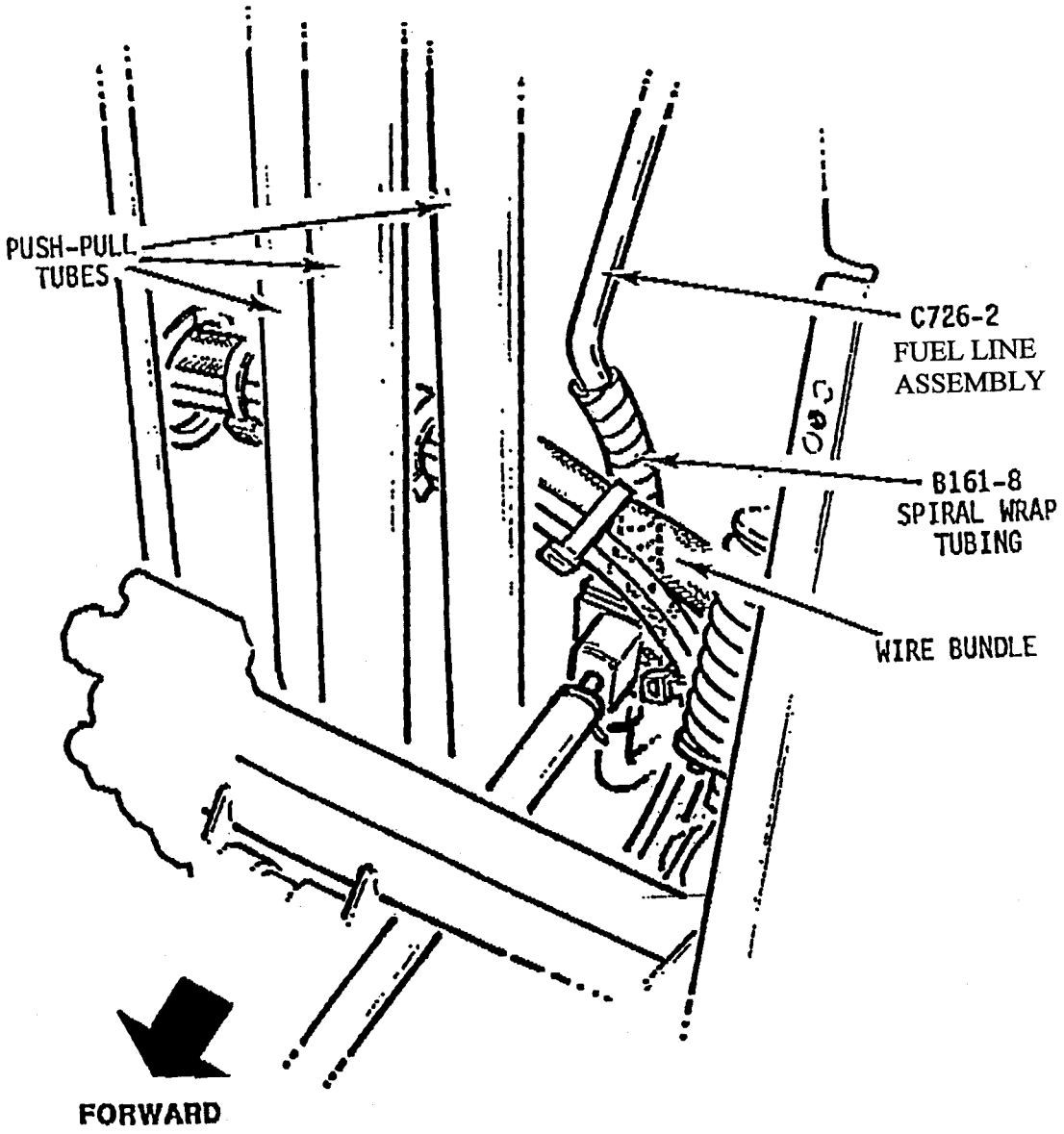

FIGURE 1

BILLING CODE 4910–13–C

(e) An alternative method of compliance or adjustment of the compliance time that provides an acceptable level of safety may be used if approved by the Manager, Los Angeles Aircraft Certification Office. Operators shall submit their requests through an FAA Principal Maintenance Inspector, who may concur or comment and then send it to the Manager, Los Angeles Aircraft Certification Office.

Note 4: Information concerning the existence of approved alternative methods of compliance with this AD, if any, may be obtained from the Los Angeles Aircraft Certification Office.

(f) Special flight permits may be issued in accordance with sections 21.197 and 21.199 of the Federal Aviation Regulations (14 CFR 21.197 and 21.199) to operate the helicopter to a location where the requirements of this AD can be accomplished.

(g) This amendment becomes effective on May 11, 2000.

Issued in Fort Worth, Texas, on March 28, 2000.

Henry A. Armstrong,

Manager, Rotorcraft DirectorateAircraft Certification Service.

[FR Doc. 00–8519 Filed 4–5–00; 8:45 am]

BILLING CODE 4910–13–U

DEPARTMENT OF TRANSPORTATION

Federal Aviation Administration

14 CFR Part 97

[Docket No. 29977; Amdt. No. 1985]

Standard Instrument Approach Procedures; Miscellaneous Amendments

AGENCY: Federal Aviation Administration (FAA), DOT.

ACTION: Final rule.

SUMMARY: This amendment establishes, amends, suspends, or revokes Standard Instrument Approach Procedures (SIAPs) for operations at certain airports. These regulatory actions are needed because of changes occurring in the National Airspace System, such as the commissioning of new navigational facilities, addition of new obstacles, or changes in air traffic requirements. These changes are designed to provide safe and efficient use of the navigable airspace and to promote safe flight operations under instrument flight rules at the affected airports.

DATES: An effective date for each SIAP is specified in the amendatory provisions.

Incorporation by reference-approved by the Director of the Federal Register on December 31, 1980, and reapproved as of January 1, 1982.

ADDRESSES: Availability of matter incorporated by reference in the amendment is as follows:

For Examination—

1. FAA Rules Docket, FAA Headquarters Building, 800 Independence Avenue, SW., Washington, DC 20591;

2. The FAA Regional Office of the region in which affected airport is located; or

3. The Flight Inspection Area Office which originated the SIAP.

For Purchase—Individual SIAP copies may be obtained from:

1. FAA Public Inquiry Center (APA–200), FAA Headquarters Building, 800 Independence Avenue, SW., Washington, DC 20591; or

2. The FAA Regional Office of the region in which the affected airport is located.

By Subscription—Copies of all SIAPs, mailed once every 2 weeks, are for sale by the Superintendent of Documents, US Government Printing Office, Washington, DC 20402.

FOR FURTHER INFORMATION CONTACT: Donald P. Pate, Flight Procedure Standards Branch (AMCAFS–420), Flight Technologies and Programs Division, Flight Standards Service, Federal Aviation Administration, Mike Monroney Aeronautical Center, 6500 South MacArthur Blvd. Oklahoma City, OK. 73169 (Mail Address: P.O. Box 25082 Oklahoma City, OK. 73125) telephone: (405) 954–4164.

SUPPLEMENTARY INFORMATION: This amendment to part 97 of the Federal Aviation Regulations (14 CFR part 97) establishes, amends, suspends, or revokes Standard Instrument Approach Procedures (SIAPs). The complete regulatory description on each SIAP is contained in the appropriate FAA Form 8260 and the National Flight Data Center (FDC)/Permanent (P) Notices to Airmen (NOTAM) which are incorporated by reference in the amendment under 5 U.S.C. 552(a), 1 CFR part 51, and § 97.20 of the Federal Aviation's Regulations (FAR). Materials incorporated by reference are available for examination or purchase as stated above.

The large number of SIAPs, their complex nature, and the need for a special format make their verbatim publication in the **Federal Register** expensive and impractical. Further, airmen do not use the regulatory text of the SIAPs, but refer to their graphic depiction of charts printed by publishers of aeronautical materials. Thus, the advantages of incorporation by reference are realized and publication of the complete description of each SIAP contained in FAA form documents is unnecessary. The provisions of this amendment state the affected CFR (and FAR) sections, with the types and effective dates of the SIAPs. This amendment also identifies the airport, its location, the procedure identification and the amendment number.

The Rule

This amendment to part 97 of the Federal Aviation Regulations (14 CFR part 97) establishes, amends, suspends, or revokes SIAPs. For safety and timeliness of change considerations, this amendment incorporates only specific changes contained in the content of the following FDC/P NOTAMs for each SIAP. The SIAP information is some previously designated FDC/Temporary (FDC/T) NOTAMs is of such duration as to be permanent. With conversion to FDC/P NOTAMs, the respective FDC/T NOTAMs have been canceled.

The FDC/P NOTAMs for the SIAPS contained in this amendment are based on the criteria contained in the U.S. Standard for Terminal Instrument Procedures (TERPS). In developing these chart changes to SIAPs by FDC/P NOTAMs, the TERPS criteria were applied to only these specific conditions existing at the affected airports. All SIAP amendments in this rule have been previously issued by the FAA in a National Flight Data Center (FDC) Notice to Airmen (NOTAM) as an emergency action of immediate flight safety relating directly to published aeronautical charts. The circumstances which created the need for all these SIAP amendments requires making them effective in less than 30 days.

Further, the SIAPs contained in this amendment are based on the criteria contained in the TERPS. Because of the close and immediate relationship between these SIAPs and safety in air commerce, I find that notice and public procedure before adopting these SIAPs are impracticable and contrary to the public interest and, where applicable, that good cause exists for making these SIAPs effective in less than 3 days.

Conclusion

The FAA has determined that this regulation only involves an established body of technical regulations for which frequent and routine amendments are necessary to keep them operationally current. It, therefore—(1) is not a ''significant regulatory action'' under Executive Order 12866; (2) is not a ''significant rule'' under DOT Regulatory Policies and Procedures (44 FR 11034; February 26, 1979); and (3) does not warrant preparation of a

regulatory evaluation as the anticipated impact is so minimal. For the same reason, the FAA certifies that this amendment will not have a significant economic impact on a substantial number of small entities under the criteria of the Regulatory Flexibility Act.

List of Subjects in 14 CFR Part 97

Air Traffic Control, Airports, Navigation (Air).

Issued in Washington, DC on March 31, 2000.

L. Nicholas Lacey,

Director, Flight Standards Service.

Adoption of the Amendment

Accordingly, pursuant to the authority delegated to me, part 97 of the Federal Aviation Regulations (14 CFR part 97) is amended by establishing, amending, suspending, or revoking Standard Instrument Approach Procedures, effective at 0901 UTC on the dates specified, as follows:

PART 97—STANDARD INSTRUMENT APPROACH PROCEDURES

1. The authority citation for part 97 is revised to read as follows:

Authority: 49 U.S.C. 40103, 40113, 40120, 44701; 49 U.S.C. 106(g); and 14 CFR 11.49(b)(2).

2. Part 97 is amended to read as follows:

§§ 97.23, 97.25, 97.27, 97.29, 97.31, 97.33, 97.35 [Amended]

By amending: § 97.23 VOR, VOR/DME, VOR or TACAN, and VOR/DME or TACAN; § 97.25 LOC, LOC/DME, LDA, LDA/DME, SDF, SDF/DME; § 97.27 NDB, NDB/DME; § 97.29 ILS, ILS/DME, ISMLS, MLS, MLS/DME, MLS/RNAV; § 97.31 RADAR SIAPs; § 97.33 RNAV SIAPs and § 97.97.35 COPTER SIAPs, identified as follows:

. . . Effective April 20, 2000

Chicago/Aurora, IL, Aurora Muni, VOR–A, Amdt 2
Chicago/Aurora, IL, Aurora Muni, VOR RWY 15, Orig
Chicago/Aurora, IL, Aurora Muni, VOR RWY 33, Orig
Chicago/Aurora, IL, Aurora Muni, VOR RWY 36, Amdt 3

Effective May 18, 2000

Anchorage, AK, Anchorage Intl, ILS RWY 6L, Orig

Effective June 15, 2000

Birmingham, AL, Birmingham Intl, GPS RWY 24, Orig–B
Columbus, GA, Columus Metropolitan, VOR/DME RNAV OR GPS RWY 23, Amdt 2
Jerome, ID, Jerome County, GPS RWY 8, Orig
Jerome, ID, Jerome County, GPS RWY 26, Orig
Belleville, IL, Midamerica Airport, NDB RWY 32R, Orig
Chicago, IL, Chicago Midway, NDB OR GPS RWY 4R, Amdt 12B
Chicago, IL, Chicago Midway, NDB OR GPS RWY 31C, Amdt 14B
Clinton, IA, Clinton Muni, NDB RWY 14, Amdt 5
Marshalltown, IA, Marshalltown Muni, VOR RWY 12, Amdt 1
Marshalltown, IA, Marshalltown Muni, VOR RWY 30, Amdt 1
Marshalltown, IA, Marshalltown Muni, NDB RWY 12, Amdt 8
Sioux City, IA, Sioux Gateway, GPS RWY 17, Amdt 1
Brainered, MN, Brainerd-Crow Wing Co Regional, VOR/DME OR GPS RWY 12, Amdt 9A
Brainered, MN, Brainerd-Crow Wing Co Regional, VOR OR GPS RWY 30, Amdt 13B
Brainered, MN, Brainerd-Crow Wing Co Regional, NDB OR GPS RWY 23, Amdt 5B
International Falls, MN, Falls Intl, COPTER ILS RWY 31, Orig
Cuba, MO, Cuba Muni, NDB–A, Orig
Cuba, MO, Cuba Muni, NDB OR GPS RWY 18, Amdt 2
Cuba, MO, Cuba Muni, NDB OR GPS RWY 36, Amdt 2
Glens Falls, NY, Floyd Bennet Memorial, VOR/DME OR GPS RWY 19, Amdt 6B
Dickinson, ND, Dickinson Muni, NDB RWY 32, Amdt 1
Dickinson, ND, Dickinson Muni, ILS RWY 32, Amdt 1
Dickinson, ND, Dickinson Muni, VOR/DME RNAV OR GPS RWY 14, Amdt 5, CANCELLED
Dickinson, ND, Dickinson Muni, RNAV RWY 14, Orig
Dickinson, ND, Dickinson Muni, RNAV RWY 32, Orig
Williston, ND, Sloulin Field Intl, VOR OR GPS RWY 11, Amdt 12B
Williston, ND, Sloulin Field Intl, NDB RWY 29, Amdt 2B
Cincinnati, OH, Cincinnati Muni Airport-Lunken Field, LOC BC RWY 3R, Amdt 8A
Cincinnati, OH, Cincinnati Muni Airport-Lunken Field, NDB OR GPS RWY 21L, Amdt 14A
Cleveland, OH, Cleveland-Hopkins Intl, NDB OR GPS RWY 5R, Amdt 5A
Cleveland, OH, Cleveland-Hopkins Intl, NDB OR GPS RWY 23L, Amdt 1A
Cleveland, OH, Cleveland-Hopkins Intl, VOR/DME RNAV OR GPS RWY 10 Amdt 12A
Corvallis, OR, Corvallis Muni, VOR/DME RWY 35, Amdt 11A
Hartsville, SC, Hartsville Rgnl, NDB RWY 3, Orig
Watertown, SD, Watertown Muni, LOC/DME BC RWY 17, Amdt 9A
Watertown, SD, Watertown Muni, LOC/DME BC RWY 35, Amdt 8A
Yankton, SC, Chan Gurney Muni, NDB OR GPS RWY 31, Amdt 2B
Chesapeake, VA, Chesapeake Muni, VOR/DME RWY 23, Amdt 2D
Cheyenne, WY, Cheyenne, GPS RWY 12, Amdt 1B
Cheyenne, WY, Cheyenne, GPS RWY 26, Orig
Gillette, WY, Gillette-Campbell County, LOC/DME BC RWY 16, Amdt 3A

. . . Effective July 13, 2000

La Grande, OR, La Grande/Union County, NDB–B, Orig
La Grande, OR, La Grande/Union County, NDB OR GPS–A, Amdt 3, CANCELLED

[FR Doc. 00–8456 Filed 4–5–00; 8:45 am]
BILLING CODE 4910–13–M

DEPARTMENT OF TRANSPORTATION

Federal Aviation Administration

14 CFR Part 97

[Docket No. 29976; Amdt. No. 1984]

Standard Instrument Approach Procedures; Miscellaneous Amendments

AGENCY: Federal Aviation Administration (FAA), DOT.

ACTION: Final rule.

SUMMARY: This amendment establishes, amends, suspends, or revokes Standard Instrument Approach Procedures (SIAPs) for operations at certain airports. These regulatory actions are needed because of the adoption of new or revised criteria, or because of changes occurring in the National Airspace System, such as the commissioning of new navigational facilities, addition of new obstacles, or changes in air traffic requirements. These changes are designed to provide safe and efficient use of the navigable airspace and to promote safe flight operations under instrument flight rules at the affected airports.

DATES: An effective date for each SIAP is specified in the amendatory provisions.

Incorporation by reference-approved by the Director of the Federal Register on December 31, 1980, and reapproved as of January 1, 1982.

ADDRESSES: Availability of matters incorporated by reference in the amendment is as follows:

For Examination—

1. FAA Rules Docket, FAA Headquarters Building, 800 Independence Avenue, SW., Washington, DC 20591;

2. The FAA Regional Office of the region in which the affected airport is located; or

3. The Flight Inspection Area Office which originated the SIAP.

For Purchase—Individual SIAP copies may be obtained from:

1. FAA Public Inquiry Center (APA–200), FAA Headquarters Building, 800 Independence Avenue, SW., Washington, DC 20591; or

2. The FAA Regional Office of the region in which the affected airport is located.

By Subscription—Copies of all SIAPs, mailed once every 2 weeks, are for sale by the Superintendent of Documents, U.S. Government Printing Office, Washington, DC 20402.

FOR FURTHER INFORMATION CONTACT: Donald P. Pate, Flight procedure Standards Branch (AMCAFS–420), Flight Technologies and programs Division, Flight Standards Service, Federal Aviation Administration, Mike Monroney Aeronautical Center, 6500 South MacArthur Blvd. Oklahoma City, OK. 73125) (Mail Address: P.O. Box 25082, Oklahoma City, OK. 73125) telephone: (405) 954–4164.

SUPPLEMENTARY INFORMATION: This amendment to part 97 of the Federal Aviation Regulations (14 CFR part 97) establishes, amends, suspends, or revokes Standard Instrument Approach Procedures (SIAPs). The complete regulatory description of each SIAP is contained in official FAA form documents which are incorporated by reference in this amendment under 5 U.S.C. 552(a), 1 CFR part 51, and § 97.20 of the Federal Aviation Regulations (FAR). The applicable FAA Forms are identified as FAA Forms 8260–3, 8260–4, and 8260–5. Materials incorporated by reference are available for examination or purchase as stated above.

The large number of SIAPs, their complex nature, and the need for a special format make their verbatim publication in the **Federal Register** expensive and impractical. Further, airmen do not use the regulatory text of the SIAPs, but refer to their graphic depiction on charts printed by publishers of aeronautical materials. Thus, the advantages of incorporation by reference are realized and publication of the complete description of each SIAP contained in FAA form documents is unnecessary. The provisions of this amendment state the affected CFR (and FAR) sections, with the types and effective dates of the SIAPs. This amendment also identifies the airport, its location, the procedure identification and the amendment number.

This amendment to part 97 is effective upon publication of each separate SIAP as contained in the transmittal. Some SIAP amendments may have been previously issued by the FAA in a National Flight Data Center (NFDC) Notice to Airmen (NOTAM) as an emergency action of immediate flight safety relating directly to published aeronautical charts. The circumstances which created the need for some SIAP amendments may require making them effective in less than 30 days. For the remaining SIAPs, an effective date at least 30 days after publication is provided.

Further, the SIAPs contained in this amendment are based on the criteria contained in the U.S. Standard for Terminal Instrument Procedures (TERPS). In developing these SIAPs, the TERPS criteria were applied to the conditions existing or anticipated at the affected airports. Because of the close and immediate relationship between these SIAPs and safety in air commerce, I find that notice and public procedure before adopting these SIAPs are impracticable and contrary to the public interest and, where applicable, that good cause exists for making some SIAPs effective in less than 30 days.

Conclusion

The FAA has determined that this regulation only involves an established body of technical regulations for which frequent and routine amendments are necessary to keep them operationally current. It, therefore—(1) is not a ''significant regulatory action'' under Executive Order 12866; (2) is not a ''significant rule'' under DOT Regulatory Policies and Procedures (44 FR 11034; February 26, 1979); and (3) does not warrant preparation of a regulatory evaluation as the anticipated impact is so minimal. For the same reason, the FAA certifies that this amendment will not have a significant economic impact on a substantial number of small entities under the criteria of the Regulatory Flexibility Act.

List of Subjects in 14 CFR Part 97

Air Traffic Control, Airports, Navigation (Air).

Issued in Washington, DC on March 31, 2000.

L. Nicholas Lacey,

Director, Flight Standards Service.

Adoption of the Amendment

Accordingly, pursuant to the authority delegated to me, part 97 of the Federal Aviation Regulations (14 CFR part 97) is amended by establishing, amending, suspending, or revoking Standard Instrument Approach Procedures, effective at 0901 UTC on the dates specified, as follows:

PART 97—STANDARD INSTRUMENT APPROACH PROCEDURES

1. The authority citation for part 97 is revised to read as follows:

Authority: 49 U.S.C. 106(g), 40103, 40113, 40120, 44701; and 14 CFR 11.49(b)(2).

2. Part 97 is amended to read as follows:

§§ 97.23, 97.25, 97.27, 97.29, 97.31, 97.33, 97.35 [Amended]

By amending: § 97.23 VOR, VOR/DME. VOR or TACAN, and VOR/DME or TACAN; § 97.25 LOC, LOC/DME, LDA, LDA/DME, SDF, SDF/DME; § 97.27 NDB, NDB/DME; § 97.29 ILS, ILS/DME, ISMLS, MLS, MLS/DME, MLS/RNAV; § 97.31 RADAR SIAPs; § 97.33 RNAV SIAPs; and § 97.35 COPTER SIAPs, identified as follows:

. . . Effective Upon Publication

FDC date	State	City	Airport	FDC No.	SIAP
03/06/00	FL	Orlando	Orlando Executive	0/2249	NDB Rwy 7, Amdt 15...
03/13/00	CT	Windsor Locks	Bradley Intl	0/2439	NDB or GPS Rwy 6 Amdt 28...
03/13/00	CT	Windsor Locks	Bradley Intl	0/2442	Copter ILS 058 Degrees Amdt 2...
03/15/00	OH	Sidney	Sidney Muni	0/2543	VOR or GPS Rwy 22 Amdt 12...
03/15/00	OH	Sidney	Sidney Muni	0/2544	VOR/DME RNAV or GPS Rwy 28 Amdt 5...
03/16/00	CA	Sacramento	Sacramento Intl	0/2629	ILS Rwy 16L, Orig...
03/16/00	CA	Sacramento	Sacramento Intl	0/2630	ILS Rwy 16R (CAT I, II, & III), Amdt 13...

FDC date	State	City	Airport	FDC No.	SIAP
03/16/00	ND	Hillsboro	Hillsboro Muni	0/2609	GPS Rwy 34, Orig-A...
03/16/00	ND	Hillsboro	Hillsboro Muni	0/2610	GPS Rwy 16, Orig-A...
03/18/00	WY	Gillette	Gillette-Campbell Co	0/2660	NDB Rwy 34, Orig-A...
03/18/00	WY	Gillette	Gillette-Campbell Co	0/2663	VOR/DME or GPS Rwy 34, Orig-A...
03/18/00	WY	Gillette	Gillette-Campbell Co	0/2664	LOC/DME BC Rwy 16, Amdt 3...
03/18/00	WY	Gillette	Gillette-Campbell Co	0/2665	ILS Rwy 34, Amdt 2A...
03/18/00	WY	Gillette	Gillette-Campbell Co	0/2667	VOR or GPS Rwy 16, Amdt 6A...
03/20/00	CA	Sacramento	Sacramento Intl	0/2704	ILS Rwy 34L Amdt 5...
03/20/00	TX	Conroe	Montgomery County	0/2711	VOR/DME RNAV Rwy 32, Amdt 1A...
03/20/00	TX	Conroe	Montgomery County	0/2712	GPS Rwy 32, Orig-A...
03/20/00	TX	Conroe	Montgomery County	0/2713	NDB Rwy 14, Amdt 1A...
03/20/00	TX	Conroe	Montgomery County	0/2714	ILS Rwy 14, Amdt 1B...
03/21/00	IA	Dubuque	Dubuque Regional	0/2729	ILS Rwy 31, Amdt 10D...
03/21/00	KS	Belleville	Belleville Muni	0/2728	VOR/DME–A, Amdt 3A...
03/21/00	MN	Montevideo	Montevideo-Chippewa County	0/2769	VOR or GPS Rwy 14, Amdt 4A...
03/21/00	MO	St Joseph	Rosecrans Memorial	0/2758	LOC BC Rwy 17, Amdt 8...
03/21/00	MO	St Joseph	Rosecrans Memorial	0/2760	ILS Rwy 35, Amdt 30...
03/21/00	MO	St Joseph	Rosecrans Memorial	0/2761	NDB Rwy 17, Amdt 8A...
03/21/00	MO	St Joseph	Rosecrans Memorial	0/2765	VOR/DME RNAV or GPS Rwy 17, Amdt 4A...
03/21/00	MO	St Joseph	Rosecrans Memorial	0/2767	NDB or GPS Rwy 35, Amdt 28C...
03/21/00	WI	Land O'Lakes	King's Land O'Lakes	0/2730	NDB Rwy 32, Orig...
03/22/00	OH	Batavia	Clermont County	0/2808	NDB or GPS Rwy 22, Orig-A...
03/22/00	OH	Wapakoneta	Neil Armstrong	0/2815	GPS Rwy 8, Orig...
03/22/00	WI	Land O'Lakes	King's Land O'Lakes	0/2817	NDB or GPS Rwy 14, Amdt 9...
03/23/00	CA	San Diego	San Diego Intl-Lindbergh Field	0/2838	LOC Rwy 27 Amdt 2C...
03/23/00	FL	Orlando	Executive	0/2859	GPS Rwy 7 Orig...
03/23/00	FL	Orlando	Executive	0/2861	GPS Rwy 25 Orig-A...
03/23/00	FL	Orlando	Executive	0/2866	VOR/DME Rwy 25 Amdt 1A...
03/23/00	FL	Orlando	Executive	0/2867	LOC BC Rwy 25 Amdt 20...
03/23/00	FL	Orlando	Executive	0/2868	ILS Rwy 7 Amdt 21...
03/23/00	OR	Eugene	Mahlon Sweet Field	0/2892	GPS Rwy 34 Orig-A...
03/23/00	OR	Eugene	Mahlon Sweet Field	0/2897	VOR/DME or TA-CAN Rwy 34 Amdt 4A...
03/24/00	CA	Bakersfield	Meadows Field	0/2951	GPS Rwy 30R Orig-A...
03/24/00	CT	Hartford	Hartford-Brainard	0/2942	LDA Rwy 2 Amdt 1B...
03/24/00	FL	Cocoa	Merritt Island	0/2934	GPS Rwy 11 Amdt 1...
03/24/00	FL	Cocoa	Merritt Island	0/2935	NDB Rwy 11, Amdt 1...
03/24/00	FL	Orlando	Kissimmee Muni	0/2945	GPS Rwy 6 Orig-A...
03/24/00	FL	Orlando	Kissimmee Muni	0/2946	GPS Rwy 33 Orig-A...
03/24/00	FL	Orlando	Kissimmee Muni	0/2947	GPS Rwy 15 Orig-A...
03/24/00	FL	Orlando	Kissimmee Muni	0/2949	VOR/DME or GPS-A Orig-A...
03/24/00	FL	Titusville	Arthur Dunn Airpark	0/2932	GPS Rwy 33 Orig-A...
03/24/00	FL	Titusville	Arthur Dunn Airpark	0/2933	GPS Rwy 15 Orig-A...
03/24/00	FL	Titusville	Space Coast Regional	0/2938	ILS Rwy 36 Amdt 10...
03/27/00	FL	Melbourne	Melbourne Intl	0/3020	VOR Rwy 9R, Amdt 19C...
03/27/00	FL	Melbourne	Melbourne Intl	0/3021	ILS Rwy 9R, Amdt 10C...
03/27/00	FL	Melbourne	Melbourne Intl	0/3023	VOR or GPS Rwy 27L, Amdt 11D...
03/27/00	FL	Melbourne	Melbourne Intl	0/3024	LOC BC Rwy 27L, Amdt 8E...
03/27/00	FL	Melbourne	Melbourne Intl	0/3026	GPS Rwy 27R, Orig-A...
03/27/00	FL	Melbourne	Melbourne Intl	0/3027	NDB or GPS Rwy 9R, Amdt 14B...
03/27/00	FL	Orlando	Kissimmee Muni	0/3039	NDB Rwy 15, Orig-A...

[FR Doc. 00–8455 Filed 4–5–00; 8:45 am]
BILLING CODE 4910–13–M

SOCIAL SECURITY ADMINISTRATION

20 CFR Parts 404 and 416

[Regulations Nos. 4 and 16]

RIN 0960–AE 96

Federal Old-Age, Survivors and Disability Insurance and Supplemental Security Income for the Aged, Blind, and Disabled; Determining Disability and Blindness; Clarification of ''Age'' as a Vocational Factor

AGENCY: Social Security Administration.

ACTION: Final rules.

SUMMARY: We are revising the Social Security and Supplemental Security Income (SSI) disability regulations to clarify our consideration of ''age'' as a vocational factor at the last step of our sequential evaluation process for determining whether an individual is disabled under title II or title XVI of the Social Security Act (the Act). We are also amending our rules to better explain how we consider transferability of skills for individuals who are of ''advanced age'' (age 55 or older) in deciding whether such individuals can make an adjustment to other work.

DATES: These rules will be effective May 8, 2000.

FOR FURTHER INFORMATION CONTACT: Georgia E. Myers, Regulations Officer, Social Security Administration, 6401 Security Boulevard, Baltimore, MD 21235–6401, 1–410–965–3632 or TTY 1–800–966–5609 for information about these rules. For information on eligibility or filing for benefits, call our national toll-free number, 1–800–772–1213 or TTY 1–800–325–0778.

SUPPLEMENTARY INFORMATION: The Act provides, in title II, for the payment of disability benefits to persons insured under the Act. Title II also provides for the payment of child's insurance benefits for persons who become disabled before age 22, and for the payment of widow's and widower's insurance benefits for disabled widows, widowers, and surviving divorced spouses of insured persons. In addition, the Act provides, in title XVI, for SSI payments to persons who are aged, blind, or disabled and who have limited income and resources.

For adults (including persons claiming child's insurance benefits based on disability under title II), ''disability'' is defined in the Act under both title II and title XVI as the ''inability to engage in any substantial gainful activity by reason of any medically determinable physical or mental impairment which can be expected to result in death or which has lasted or can be expected to last for a continuous period of not less than 12 months.'' Sections 223(d) and 1614(a) of the Act also state that an individual ''shall be determined to be under a disability only if his physical or mental impairment or impairments are of such severity that he is not only unable to do his previous work but cannot, considering his age, education, and work experience, engage in any other kind of substantial gainful work which exists in the national economy, regardless of whether such work exists in the immediate area in which he lives, or whether a specific job vacancy exists for him, or whether he would be hired if he applied for work.''

To implement the process for determining whether an individual is disabled based upon this statutory definition, our regulations at §§ 404.1520 and 416.920 provide for a five-step sequential evaluation process as follows:

1. Is the individual engaging in substantial gainful activity? If the individual is working and the work is substantial gainful activity (SGA), we find that he or she is not disabled. Otherwise, we proceed to step 2 of the sequence.

2. Does the individual have an impairment or combination of impairments that is severe? If the individual does not have an impairment or combination of impairments that is severe, we find that he or she is not disabled. If the individual has an impairment or combination of impairments that is severe, we proceed to step 3 of the sequence.

3. Does the individual's impairment(s) meet or equal the severity of an impairment listed in appendix 1 of subpart P of part 404 of our regulations? If so, and the duration requirement is met, we find that he or she is disabled. If not, we proceed to step 4 of the sequence.

4. Does the individual's impairment(s) prevent him or her from doing his or her past relevant work, considering his or her residual functional capacity (RFC)? If not, we find that he or she is not disabled. If so, we proceed to step 5 of the sequence.

5. Does the individual's impairment(s) prevent him or her from performing other work that exists in the national economy, considering his or her RFC together with the ''vocational factors'' of age, education, and work experience? If so, and if the duration requirement is met, we find that the individual is disabled. If not, we find that he or she is not disabled.

As discussed in §§ 404.1569 and 416.969, at step 5 of the sequential evaluation process we use the medical-vocational rules that are set out in appendix 2 of subpart P of part 404. (By reference, § 416.969 provides that appendix 2 is also applicable to adults claiming SSI payments based on disability.) In general, the rules in appendix 2 take administrative notice of the existence of numerous, unskilled occupations at exertional levels defined in the regulations, such as ''sedentary,'' ''light,'' and ''medium.'' Based upon a consideration of an individual's RFC, age, education, and work experience, the rules either direct a conclusion as to whether an individual is disabled at step 5 of the sequential evaluation process or provide a framework for making a decision at this step. Some rules in appendix 2 also direct a conclusion when an individual has ''skills'' acquired from previous skilled or semiskilled work that are ''transferable'' to other skilled or semiskilled work.

Our rules regarding age and skills are set out in §§ 404.1563, 404.1568, 416.963, and 416.968. The rules and explanatory text of appendix 2 of subpart P of part 404 also provide guidance for considering the vocational factors of age, education, and work experience that supplement the information on consideration of these vocational factors in §§ 404.1560–404.1569a and 416.960–416.969a.

Our revisions clarify a number of our rules on the consideration of one of the vocational factors, ''age,'' in §§ 404.1563 and 416.963. They also clarify in final §§ 404.1568(d)(4) and 416.968(d)(4) how we determine whether individuals who are of ''advanced age'' (*i.e.,* age 55 or older), including individuals in a subcategory of advanced age called ''closely approaching retirement age'' (*i.e.,* age 60–64), have skills that are transferable to other work.

Explanation of Revisions

For clarity, we refer to the changes in this notice as ''final'' rules and to the rules that will be changed by these final rules as the ''current'' rules. However, it must be remembered that these final rules do not go into effect until 30 days after the date of this publication. Therefore, the ''current'' rules will still be in effect for another 30 days.

Sections 404.1563 and 416.963 Your Age as a Vocational Factor

We are revising the first sentence of paragraph (a) of §§ 404.1563 and

416.963, ''General,'' to state more clearly that ''age'' means chronological age. We are doing this because there has been some misunderstanding about how we consider the vocational factor of ''age'' at step 5 of the sequential evaluation process. In current paragraph (a) we state, in part, that ''*Age* refers to how old you are (your chronological age) * * *.'' We use an individual's chronological age when we use the medical-vocational guidelines in appendix 2 to decide whether the individual can do other work. We do this because we built consideration of chronological age and its impact on an individual's ability to make an adjustment to other work into the medical-vocational guidelines in appendix 2. These guidelines also consider the person's education and work experience, as well as the person's physical and mental functioning (*i.e.,* RFC).

In addition to defining ''age'' as how old you are (your chronological age), the first sentence of paragraph (a) of current §§ 404.1563 and 416.963 explains that ''age'' refers to the extent to which age affects an individual's ability to adapt to a new work situation and ''to do work in competition with others.'' We are incorporating the principle intended in this statement into a new third sentence that clarifies our intent, as explained below.

The second sentence of paragraph (a) of final §§ 404.1563 and 416.963 combines the second and third sentences of current paragraph (a). It clarifies our intent that, when we decide whether a person is disabled, we will not consider the person's age alone, but will consider his or her RFC, education, and work experience together with age.

The third sentence of paragraph (a) of final §§ 404.1563 and 416.963 explains that, when we consider the vocational factor of ''age'' in determining an individual's ability to adjust to other work, we consider advancing age to be an increasingly limiting factor in the ability to make such an adjustment.

The third sentence of paragraph (a) of final §§ 404.1563 and 416.963, incorporates the rule we intended in the first sentence of current §§ 404.1563(a) and 416.963(a), indicating that we consider the effects of age on an individual's ability ''to do work in competition with others.'' Some United States Courts of Appeals have interpreted this provision of the current rules, together with a provision regarding skills that are ''highly marketable'' in current §§ 404.1563(d) and 416.963(d) that we are replacing, to support holdings that our regulations provide for consideration of an individual's employability. This is contrary to our intent. The circuit courts in these cases did not hold that their conclusions were required by the Act, which prohibits consideration of whether an individual would be hired if he or she applied for work. *See* sections 223(d)(2) and 1614(a)(3)(B) of the Act. Rather, the courts relied on the language in the provisions of our regulations in current §§ 404.1563(a) and (d) and 416.963(a) and (d). The changes to the regulations provided in these final rules are, therefore, necessary to clarify our intent in this area.

In the fourth sentence of §§ 404.1563(a) and 416.963(a) of the proposed rules, we had proposed replacing the current rules' reference to the ability to ''do a significant number of jobs which exist in the national economy'' with a reference to ''the ability to do substantial gainful activity.'' We proposed this change to better reflect the definition of disability in the Act. In response to a comment we received on the proposed rules in which the commenter expressed the view that our proposed fourth sentence of paragraph (a) seemed inconsistent with the intent of our revisions to §§ 404.1563 and 416.963, we are revising that sentence in the final rules to read: ''If you are unemployed, but you still have the ability to adjust to other work, we will find that you are not disabled.''

The fifth sentence of final §§ 404.1563(a) and 416.963(a) is similar to the fifth sentence of current §§ 404.1563(a) and 416.963(a).

We are moving the last sentence of paragraph (a) of §§ 404.1563 and 416.963 of the current rules to final §§ 404.1563(b) and 416.963(b). This sentence explains that we will not apply the age categories mechanically in a borderline situation. We believe the sentence fits more logically with the provisions in new paragraph (b) of the final rules, which explains more fully how we apply the age categories.

We are adding a new paragraph (b), entitled ''How we apply the age categories,'' to §§ 404.1563 and 416.963. The new paragraph explains that, if a person's age category changes during the period for which we are adjudicating a disability claim, we will use each of the age categories that is applicable to the person during the period for which we are deciding if the person is disabled. We also explain that in borderline age situations, we will not apply the age categories mechanically. We explain that a ''borderline'' situation means that the individual is ''within a few days to a few months'' of reaching a higher age category. This is consistent with our current policy interpretation in Social Security Ruling 83–10, ''Titles II and XVI: Determining Capability To Do Other Work—The Medical-Vocational Rules of Appendix 2,'' Social Security Rulings (C.E. 1983, p. 174). As we explain in that Social Security Ruling, we are unable to provide ''fixed'' guidelines since such guidelines themselves would reflect a mechanical approach. (*See* Social Security Ruling 83–10, ibid., p. 182.)

In response to commenters' requests to clarify the provisions of the proposed rules concerning borderline age, we are changing the last sentence of paragraph (b) in final §§ 404.1563 and 416.963 to explain that ''If you are within a few days to a few months of reaching an older age category, and using the older age category would result in a determination or decision that you are disabled, we will consider whether to use the older age category after evaluating the overall impact of all the factors of your case.''

Because we are including a new paragraph (b) in final §§ 404.1563 and 416.963, we are redesignating the remaining paragraphs, *i.e.*, paragraphs (b) through (e) of the current rules, as paragraphs (c) through (f) in the final rules.

Paragraph (c) of final § § 404.1563 and 416.963, ''Younger person,'' incorporates the rules for individuals who have not yet attained age 50 that are in current §§ 404.1563(b) and 416.963(b). The second sentence of current §§ 404.1563(b) and 416.963(b) explains that in some circumstances ''we consider age 45 a handicap in adapting to a new work setting.'' The reference to ''age 45'' in this provision of the current rules is actually a reference to individuals who are age 45 through 49, because the category ''younger person'' ends upon attainment of age 50. We state this meaning plainly in the final rules by changing ''age 45'' to ''age 45–49.'' We are also revising the second sentence to remove the word ''handicap,'' to make the language of paragraphs (c), (d), and (e) of the final rules consistent and to clarify our intent; *i.e.*, to discuss the effects of age on the ability to make an adjustment to other work.

Paragraph (d) of final §§ 404.1563 and 416.963, ''Person closely approaching advanced age,'' incorporates the rules for individuals age 50 through 54 that are in current §§ 404.1563(c) and 416.963(c). We are adding the word ''closely'' to the heading of this paragraph for consistency with the text of the paragraph. We are replacing the phrase at the end of the sentence in the current rule, ''a significant number of jobs in the national economy,'' with the

phrase, ''other work,'' for consistency of language in the provisions of paragraphs (c), (d), and (e) of final §§ 404.1563 and 416.963. This is not intended to be a change in the standard, only a change for consistency among these provisions of the regulations.

Paragraph (e) of final §§ 404.1563 and 416.963, ''Person of advanced age,'' incorporates the rules for individuals age 55 or older that are in the first sentence of current §§ 404.1563(d) and 416.963(d). As in the preceding paragraphs, we are replacing the phrase, ''ability to do substantial gainful activity,'' in the first sentence of the current rules with the phrase ''ability to adjust to other work,'' so that paragraphs (c), (d), and (e) of §§ 404.1563 and 416.963 will contain consistent language.

The first sentence of paragraph (e) of final §§ 404.1563 and 416.963 reflects a change from the proposed rules. In the final rules, we use the term ''age'' instead of ''chronological age'' which was used in paragraph (e) of the proposed rules. Paragraph (a) of final §§ 404.1563 and 416.963 states that, '' 'Age' means your chronological age.'' It is unnecessary, therefore, to specify ''chronological age'' in the provisions of paragraph (e). This change from the proposed rules also will make the references to ''age'' in paragraphs (c), (d), and (e) consistent.

We are revising the second and third sentences of current §§ 404.1563(d) and 416.963(d) and moving these provisions to final §§ 404.1568(d)(4) and 416.968(d)(4). We explain these changes below, under the explanation of §§ 404.1568(d)(4) and 416.968(d)(4). We are including in §§ 404.1563(e) and 416.963(e) an appropriate cross-reference to § 404.1568(d)(4) or § 416.968(d)(4) to make it easier to find the provisions in their new location.

Sections 404.1568 and 416.968 Skill Requirements

We are adding new §§ 404.1568(d)(4) and 416.968(d)(4), ''Transferability of skills for individuals of advanced age,'' to our final regulations addressing skills and their transferability. This paragraph incorporates and clarifies the provisions in the second and third sentences of current §§ 404.1563(d) and 416.963(d). In the current regulations, these sentences provide rules regarding skills and their transferability for individuals of ''advanced age'' (*i.e.*, age 55 or older) who have the RFC for no more than ''sedentary'' work, and for individuals who are ''closely approaching retirement age'' (*i.e.*, age 60–64) who have the RFC for no more than ''light'' work. We believe that these provisions more logically belong in the sections of our regulations that discuss our rules regarding skills and their transferability; *i.e.*, §§ 404.1568 and 416.968. We are revising these provisions to clarify our intent, to make their language consistent with current provisions in our regulations, and to be consistent with other provisions in these final rules.

The second sentence of current §§ 404.1563(d) and 416.963(d) states that if a person of advanced age has a severe impairment(s) and cannot do medium work (*i.e.*, the person is limited to light or sedentary work), the person may not be able to work unless he or she has transferable skills. We are incorporating this provision in the first sentence of final §§ 404.1568(d)(4) and 416.968(d)(4).

The first sentence of final §§ 404.1568(d)(4) and 416.968(d)(4) describes a standard that applies to a person who is of advanced age (age 55 or older) and has a severe impairment(s) that limits him or her to sedentary or light work. For such a person, we state that, ''we will find that you cannot make an adjustment to other work unless you have skills that you can transfer to other skilled or semiskilled work (or you have recently completed education which provides for direct entry into skilled work) that you can do despite your impairment(s).'' This provision of the final rules differs from the provision of the proposed rules which stated that, for such a person, ''we will find that you cannot make an adjustment to other work unless you have skills that you can use in (transfer to) other skilled or semiskilled work that you can do despite your impairment(s).'' While the standard described in the proposed rules would apply in most circumstances, it is not a completely accurate statement of our rules concerning when we will find that a person who is of advanced age and limited to sedentary or light work is unable to make an adjustment to other work; *i.e.,* is disabled. Our rules in appendix 2 to subpart P of part 404 of our regulations, the medical-vocational guidelines, provide that if such a person does not have transferable skills, a finding of disability is warranted unless the person has recently completed education which provides for direct entry into skilled work within his or her RFC. *See* § 201.00(d) and rules 201.05, 201.08, 202.05 and 202.08 of appendix 2. Accordingly, we are modifying the first sentence of §§ 404.1568 (d)(4) and 416.968 (d)(4) in these final rules to reflect our rules in appendix 2.

We are incorporating in final §§ 404.1568(d)(4) and 416.968(d)(4) provisions from §§ 201.00(f) and 202.00(f) of appendix 2 to subpart P of part 404 of our regulations. This will clarify our original intent regarding the last sentence of current §§ 404.1563(d) and 416.963(d) and will provide consistency in our rules. The revisions explain that, for an individual of advanced age (*i.e.*, age 55 or older) whose RFC permits him or her to do no more than sedentary work, we will find that such individual's skills are transferable to skilled or semiskilled sedentary work only if the sedentary work is so similar to the individual's previous work that the individual would need to make ''very little, if any, vocational adjustment in terms of tools, work processes, work settings, or the industry.'' In addition, we are including in final §§ 404.1568(d)(4) and 416.968(d)(4) a provision to clarify how we consider the transferability of skills for a person who is of advanced age but has not attained age 60 (*i.e.*, a person age 55–59) and who has a severe impairment(s) that limits him or her to no more than light work. We explain that for such a person we will apply the rules in paragraphs (d)(1) through (d)(3) of current §§ 404.1568 and 416.968 to determine if the person has skills that are transferable to skilled or semiskilled light work. The revisions also explain that, for an individual of advanced age who is ''closely approaching retirement age'' (*i.e.*, age 60–64) and whose RFC permits him or her to do no more than *light* work, we will find that such individual's skills are transferable to skilled or semiskilled light work only if the light work is so similar to the individual's previous work that the individual would need to make ''very little, if any, vocational adjustment in terms of tools, work processes, work settings, or the industry.''

In making these revisions, we are replacing the statement in current §§ 404.1563(d) and 416.963(d), ''unless you have skills which are highly marketable,'' with the foregoing language taken from §§ 201.00(f) and 202.00(f) of appendix 2. This will clarify our original intent that the provisions of current §§ 404.1563(d) and 416.963(d) are consistent with, and must be read in the context of, the provisions of §§ 201.00(f) and 202.00(f) of appendix 2.

There is no reference to ''highly marketable'' skills in the Act, which prohibits consideration of whether an individual would be hired if he or she applied for work. (*See* sections 223(d)(2) and 1614(a)(3)(B) of the Act.) The phrase was one of the additions we made to the regulations under the ''common sense'' recodification in 1980. (*See* 45 FR 55566, August 20, 1980.) When we issued those regulations, we

did not intend to introduce the term as a statement of a new rule or as a change in existing rules. We intended only to contribute to public understanding of the provisions regarding transferability of skills for older workers in the medical-vocational guidelines in appendix 2. (The language in appendix 2 was not changed by the ''common sense'' recodification in 1980.) However, by using different language in current §§ 404.1563(d) and 416.963(d) from that in appendix 2, we have inadvertently given the mistaken impression that we meant to establish a separate criterion for these individuals beyond what we already provide in appendix 2. That was not our intent. (*See, e.g.,* Social Security Ruling 82–41,''Titles II and XVI: Work Skills and Their Transferability As Intended By the Expanded Vocational Factors Regulations Effective February 26, 1979,'' Social Security Rulings (C.E. 1982, pp. 196, 202); Final Rules for Adjudicating Disability Claims in Which Vocational Factors Must Be Considered, 43 FR 55349, 55353–55354 (November 28, 1978).)

Public Comments: We published these regulatory provisions in the **Federal Register** as a Notice of Proposed Rulemaking (NPRM) on August 4, 1999 (64 FR 42310). We provided the public a 60-day comment period. The comment period closed on October 4, 1999. We received 55 letters in response to the proposed rules. We received letters from disabled persons, attorneys, legal services organizations that represent the interests of disabled persons, and other interested parties. Four of the letters supported our proposed changes. The rest provided comments. A summary of the comments we received and our responses to the comments are set out below.

Because many comments were detailed, we have condensed, summarized, or paraphrased them. We have, however, tried to summarize each commenter's views accurately and to respond to all of the significant issues raised by commenters that are within the scope of the proposed rules.

Comment: Fifteen commenters believed that with increasing age, it becomes more difficult for individuals to adjust to other work. The commenters believed that a ''highly marketable'' skills standard is fair because it acknowledges that increased difficulty. One commenter stated that, ''An individual, age 60, may not be able to adapt to a new situation unless the individual has skills so specialized or unique as to offset the disadvantage of advancing age.'' One commenter noted that removal of the ''highly marketable'' provision would mean that individuals having a sedentary RFC would have no different standard at ages 55–59 than at ages 60–64.

Response: Consistent with the statutory definition of disability, our regulations reflect that advancing age is an increasingly limiting factor in an individual's ability to adjust to other work.

This concept is reflected in current §§ 404.1563 and 416.963, and in final §§ 404.1563, 404.1568(d)(4), 416.963 and 416.968(d)(4). The concept is built into the rules in the medical-vocational guidelines in appendix 2. The medical-vocational guidelines consider the impact of an individual's age, together with his or her RFC, education, and work experience, on his or her ability to make an adjustment to other work.

With advancing age, it becomes increasingly more difficult for an individual to make an adjustment to other work. Our regulations recognize this by providing, among other things, for a more restrictive standard for determining transferability of skills for individuals of advanced age (age 55 or older) who can do no more than sedentary work and for individuals closely approaching retirement age (age 60–64) who can do no more than light work. Thus, the medical-vocational guidelines, as well as § § 404.1568(d)(4) and 416.968(d)(4) of the final rules, provide that for skills to be transferable to sedentary work for individuals who are age 55–64 or to light work for individuals who are age 60–64 there must be very little, if any, vocational adjustment required in terms of tools, work processes, work settings, or the industry.

This standard for determining transferability of skills for individuals of advanced age considers the combined effects of advancing age and a restrictive RFC on an individual's ability to adjust to other work. It provides that, with advancing age (even when combined with a progressively less restrictive RFC, *i.e.,* for individuals age 60–64), past relevant work skills must fit more closely with the skill requirements of the other work that is within the individual's RFC in order to find that the individual's skills are transferable to such work. For individuals with acquired work skills, we believe that this standard gives appropriate consideration to the effect of increasing age, in combination with an individual's RFC, on an individual's ability to make an adjustment to other work. We do not agree that, as an individual becomes older, there must be a greater degree of specialized or unique skills in order for an individual with past relevant work skills to be able to adjust to other work.

We do not agree with the commenters that we must provide a distinction in our rules for individuals age 60–64 and individuals age 55–59 who are limited to sedentary exertion in the same way that we have for individuals who are able to do light exertion. We believe that our standard for transferability of skills, that is, that there be ''very little, if any, vocational adjustment in terms of tools, work processes, work settings, or the industry,'' is an appropriately narrow rule for individuals in the age groups affected. The only rule that could be narrower would be one that requires no vocational adjustment in terms of tools, work processes, work settings, or the industry, but such a standard would have virtually no applicability. By extending our narrow standard for transferability of skills to an individual age 55–59 when the individual is limited to sedentary work, we are merely recognizing the very severe limitations and the serious impact on the ability to adjust to other work that an RFC limited to ''sedentary'' exertion imposes for all individuals of advanced age. Moreover, we could not use the standard of ''highly marketable'' skills as the commenters understand it for the reasons we have already given earlier in the preamble.

Comment: Eleven commenters indicated that the provision in the regulations that refers to highly marketable skills had been in effect for at least 20 years without controversy. The commenters believed that to remove the reference to ''highly marketable'' from the regulations now would be unfair and would have a severe negative impact on individuals over the age of 60 who apply for Social Security disability benefits. One commenter found it difficult to believe that regulations that have been in place for almost two decades have inadvertently created a ''highly marketable'' standard that we did not intend.

Response: We believe that having different interpretations of our regulations in a small number of circuits is unfair to individuals who file for disability benefits. It is not true that the terminology has not raised controversy in the past. Even though the issue of transferability of skills for individuals age 60–64 who can do no more than light work arises in only a small number of claims, there have been a number of court cases centering around the issue of the meaning of ''highly marketable'' skills, especially in recent years. This is why we decided that we needed to clarify the regulations to restore national

uniformity and to clarify what we have always meant by this rule.

We do not agree that removal of the language ''highly marketable'' skills will have a severe, negative impact on individuals over the age of 60 who apply for Social Security disability benefits. Our rules for determining disability take into account a reduced ability to adapt to other work as an individual ages. Our rules for individuals age 60–64 recognize that individuals in this age group may have greater difficulty in making an adjustment to other work than individuals under age 60. In order to find that an individual age 60–64 possesses skills that are transferable to either sedentary or light work, there must be very little, if any, adjustment required in terms of tools, work processes, work settings, or the industry. This is an appropriately narrow definition of transferability and requires that other work must be very similar to an individual's past work in order to find an ability to adjust to other work.

In response to the last comment, we first published the rules establishing the standards for transferability in 1978 (43 FR 55349, November 28, 1978). Those rules did not include the phrase ''highly marketable'' skills. When we published the ''Operation Common Sense'' revisions of our disability regulations in 1980, we indicated that our goals were primarily to rewrite the disability regulations to make them easier to read and understand. We also indicated that there were some standards that we were including in the regulations for the first time, and provided a list of those new provisions. For the new provisions in § § 404.1563 and 416.963, we made no reference to the insertion of the language on highly marketable skills, a clear indication that the new language was not intended to be a change in our standard. Our intent is, and always has been, what we provided in § 202.00(f) of appendix 2 in 1978 and continue to provide in the same section.

Comment: Eight commenters stated that realities of employment in the United States economy are such that older workers cannot compete in the workforce. One commenter stated that at issue is not how competitive older workers are, but how valuable their skill set is to the job market. One commenter did not believe that older individuals could adapt to the technological changes in the marketplace. One commenter indicated that many individuals have been offered ''early out'' agreements with their companies beginning at age 50. The commenter viewed this as an indication that older workers cannot compete in the marketplace. A commenter observed that age-related health insurance costs to an employer discourage hiring of older workers. One commenter indicated that because some states have enacted early retirement programs for individuals over age 50, this is further proof that age makes it much more difficult to obtain employment. One commenter stated that employers discriminate against disabled individuals and older individuals. The commenter believed that disabled, older individuals are doubly discriminated against. One commenter stated that we must factor into our disability analysis that an older worker in a skilled trade cannot transfer to a lower paying job without violating union collective bargaining agreements.

Response: The Act precludes our consideration of such factors as the inability to get work, the condition of the job market, the hiring practices of employers, the existence of job vacancies, or the types of job openings. In applying the definition of disability under the Act at the last step of our sequential evaluation process, we consider whether an individual whose impairment(s) prevents the individual from performing his or her past relevant work, has the *ability* to do other work, considering his or her RFC, age, education and work experience. The Act requires that we consider the factors of age, education, and work experience, together with the severity of the individual's impairment(s) (RFC), in determining whether the individual is able to do ''any other kind of substantial gainful work which exists in the national economy,'' without regard to ''whether such work exists in the immediate area in which he lives, or whether a specific job vacancy exists for him, or whether he would be hired if he applied for work.'' Sections 223(d)(2) and 1614(a)(3)(B) of the Act. These sections of the Act state that work exists in the national economy if it ''exists in significant numbers either in the region where such individual lives or in several regions of the country.''

Consistent with the provisions of the Act, we consider the vocational factors of age, education, and work experience, together with an individual's RFC, in determining whether an individual has the ability to make an adjustment to other work. Thus, § § 404.1566(c) and 416.966(c) provide:

> We will determine that you are not disabled if your residual functional capacity and vocational abilities make it possible for you to do work which exists in the national economy, but you remain unemployed because of—
>
> (1) Your inability to get work;
> (2) Lack of work in your local area;
> (3) The hiring practices of employers;
> (4) Technological changes in the industry in which you have worked;
> (5) Cyclical economic conditions;
> (6) No job openings for you;
> (7) You would not actually be hired to do work you could otherwise do; or
> (8) You do not wish to do a particular type of work.

Comment: Two commenters suggested that, if we remove the ''highly marketable'' language in §§ 404.1563(d) and 416.963(d), we should change our explanation for transferable skills for individuals age 60–64 having an RFC for sedentary or light work. The commenters suggested that we change the standard to ''In order to find transferability of skills to skilled sedentary or light work for individuals close to retirement age (60–64), there must be no vocational adjustment required in terms of tools, work processes, work settings or the industry.''

Response: As we have already noted, we believe that our current language expresses an appropriate standard to account for the reduction in the ability of an individual age 60–64 to adjust to other sedentary or light work. ''Very little, if any, vocational adjustment'' is an appropriately narrow standard.

Comment: Four commenters had concerns that our proposed changes were inconsistent with the decisions of the courts and inconsistent with our decision to acquiesce in court of appeals' decisions in three circuits.

Response: As we noted in the preamble to the NPRM, ''the circuit courts in these cases did not hold that their conclusions were required by the Act, which prohibits consideration of whether an individual would be hired if he or she applied for work. * * * Rather, the courts relied on the language in [the current] provisions of our regulations.'' (64 FR 42312) Therefore, in all three of our acquiescence rulings, we stated our intent to clarify the regulations at issue through the rulemaking process and to rescind these acquiescence rulings once we revised the regulations. Accordingly, because these final rules revise the regulations that were the subject of the circuit courts' holdings, we are publishing a notice in this issue of the **Federal Register** rescinding the acquiescence rulings effective as of the date the revised regulations go into effect. *See* §§ 404.985(e)(4) and 416.1485(e)(4) of our regulations.

Comment: Three commenters requested that we clarify our concept and definition of borderline age in proposed §§ 404.1563(b) and 416.963(b).

These commenters believe that ''a few days to a few months'' is too vague an explanation of borderline age to provide much guidance to adjudicators on this issue.

Response: As we explain earlier in this preamble and in the preamble to the NPRM, the description of a ''borderline'' situation as one in which the individual is ''within a few days to a few months'' of reaching a higher age category is consistent with our current policy interpretation in Social Security Ruling 83–10. As we explain in that Social Security Ruling, we are unable to provide ''fixed'' guidelines since such guidelines themselves would reflect a mechanical approach to the application of the age categories. However, we are changing the final sentence of §§ 404.1563(b) and 416.963(b) to explain that we must consider all of the factors of each case before deciding whether to use an older age category for our decision. We are considering whether there is a need to provide additional guidance on how the factors of each case should be considered in determining whether to apply a higher age category and may issue guidance in the future.

Comment: Four commenters expressed concern about our proposal to use the term ''other work'' in place of the phrases ''a significant number of jobs which exist in the national economy,'' and ''jobs which exist in significant numbers in the national economy'' which are in the provisions of current paragraphs (b), (c), and (d), of §§ 404.1563 and 416.963. The commenters were concerned that the proposed change might result in a misunderstanding as to what is meant by ''other work.'' They believed that it is important to stress that ''other work'' refers to jobs that are at the SGA level and that exist in significant numbers in the national economy.

Response: In these final rules, we use the term ''other work'' in place of the various phrases that are used in the current rules to refer to work which exists in the national economy. We are making this change to ensure that the terminology we use to describe such work is consistent throughout these final regulations. The change is also consistent with the language of other sections of our regulations in which we use the term ''other work.'' *See, e.g.,* §§ 404.1505(a), 404.1520(f)(1), 404.1560(c), 404.1561, 416.905(a), 416.920(f)(1), 416.960(c) and 416.961.

We explain the meaning of ''other work'' in §§ 404.1560(c) and 416.960(c). These sections state that, ''[b]y other work we mean jobs that exist in significant numbers in the national economy.'' In addition, §§ 404.1505(a) and 416.905(a), which describe the basic definition of disability for adults (including persons claiming child's insurance benefits based on disability under title II), indicate that ''any other work'' refers to ''any other substantial gainful activity which exists in the national economy.''

Comment: One commenter suggested that the sentence ''If you are unemployed because of your age, but you still have the ability to do substantial gainful activity, we will find that you are not disabled'' (in proposed §§ 404.1563(a) and 416.963(a)) seemed inconsistent with the intent of the revisions, which was to clarify that ''employability and marketability'' are not considered in establishing disability. The commenter observed that the proposed rules provided no explanation of how we would determine if a person is unemployed because of his or her age. The commenter believed that the proposed provision is also inconsistent with the other sections that use the phrase ''ability to adjust to other work.'' The commenter suggested that we change the sentence to read, ''If you are unemployed but you still have the ability to adjust to other work, we will find that you are not disabled.''

Response: We adopted the comment.

Comment: One commenter believed that the legislative history leading up to the ''common sense'' recodification of our disability regulations in 1980 supported a more liberal definition of disability. The commenter stated that the ''highly marketable'' skills language is consistent with a more liberal definition of disability.

Response: The purpose of our ''common sense'' rewrite of the disability regulations in 1980 was to make our regulations easier to read and understand. There was no intent to liberalize or change the meaning of our regulations for determining whether an individual who is age 60–64, possesses work skills, and is limited to sedentary or light work, can make an adjustment to other work.

Comment: One commenter agreed with our proposed changes, but suggested that we include a dollar level amount for SGA.

Response: These final rules, like the proposed rules, clarify our consideration of age as a vocational factor at the last step of the sequential evaluation process for determining disability. Our rules for determining when earnings demonstrate an ability to do SGA are in §§ 404.1574 and 416.974. Effective July 1, 1999, we increased the average monthly earnings guidelines for determining whether work done by an employee is SGA from $500 to $700 per month. *See* 64 FR 18566, April 15, 1999.

Comment: One commenter disagreed with the principle in our rules that age affects ability to adapt to other work. The commenter stated that many studies have shown that productivity does not decline with age, workers age 55 and over account for only 9.7 percent of workplace injuries, and that intelligence remains constant until age 70. The commenter stated that workers 50 and over tend to have better job attendance records, and greater job commitment than younger workers. The commenter believed that our wording bolsters the erroneous attitudes of many employers who see workers age 50 and over as unable to learn, adapt and be productive and might convince a certain segment of the population that as they age they can no longer learn new skills nor contribute to society in a meaningful, productive way.

Response: As we explain earlier in this preamble, the Act requires us to consider an individual's age, education, and work experience, together with the severity of his or her impairment(s), in determining whether the individual is disabled.

Comment: Two individuals pointed out that for some impairments, age is not the most critical factor in disability. They suggested that we incorporate language into the regulations to explain that younger individuals can become disabled and may qualify for disability benefits as a result.

Response: Our existing regulations include rules for deciding that an individual is disabled based on medical considerations alone. *See, e.g.,* § § 404.1525 and 416.925. The final regulations clarify our rules on the consideration of age as a vocational factor at the last step of the sequential evaluation process for determining disability. We consider the vocational factors of age, education, and work experience, together with an individual's RFC, only in cases in which a finding of disability cannot be made on the basis of medical considerations alone, and the individual is prevented from doing his or her previous work because of a severe impairment(s).

Comment: One commenter stated that if someone has worked at a physically demanding job all of his or her life and cannot do that job anymore, age should not make a difference.

Response: We have a special rule for determining disability for individuals who have a long work history of arduous, unskilled work and who can no longer do this work because of a severe impairment(s). This rule is

discussed in § § 404.1520(f)(2), 404.1562, 416.920(f)(2) and 416.962.

Comment: Two commenters indicated that they believed that our NPRM is part of a trend to deny more individuals disability benefits.

Response: The purpose of our changes is to clarify the intent of our regulations and restore national uniformity to our procedures. The changes are not intended to tighten disability eligibility requirements.

Comment: One commenter indicated that SSA should provide a payment supplement to those individuals who experience reduced earning power as a result of the aging process.

Response: This is beyond the scope of our NPRM and the Act. We pay the benefits that the Act authorizes.

Comment: One commenter indicated that the disability appeals process takes far too long and believed that the disability rules should be applied uniformly from State to State.

Response: The length of the appeals process is outside the scope of the proposed rules and these final rules. We believe that the changes we are making will restore national uniformity in how age is applied as a vocational factor.

Regulatory Procedures

Executive Order 12866

We have consulted with the Office of Management and Budget (OMB) and determined that these rules do not meet the criteria for a significant regulatory action under Executive Order (E.O.) 12866. Thus, they were not subject to OMB review. We have also determined that these rules meet the plain language requirement of E.O. 12866 and the President's memorandum of June 1, 1998.

Regulatory Flexibility Act

We certify that these regulations will not have a significant economic impact on a substantial number of small entities because they affect only individuals. Therefore, a regulatory flexibility analysis as provided in the Regulatory Flexibility Act, as amended, is not required.

Paperwork Reduction Act

These regulations impose no additional reporting or recordkeeping requirements subject to OMB clearance.

(Catalog of Federal Domestic Assistance Program Nos. 96.001, Social Security-Disability Insurance; 96.002 Social Security-Retirement Insurance; 96.004, Social Security-Survivors Insurance; 96.006, Supplemental Security Income.)

List of Subjects

20 CFR Part 404

Administrative practice and procedure, Blind, Disability benefits, Old-Age, Survivors, and Disability Insurance, Reporting and recordkeeping requirements, Social Security.

20 CFR Part 416

Administrative practice and procedure, Aged, Blind, Disability benefits, Public assistance programs, Reporting and recordkeeping requirements, Supplemental Security Income (SSI).

Dated: March 17, 2000.

Kenneth S. Apfel,

Commissioner of Social Security.

For the reasons set out in the preamble, subpart P of part 404 and subpart I of part 416 of 20 CFR chapter III are amended as set forth below:

PART 404—FEDERAL OLD–AGE, SURVIVORS AND DISABILITY INSURANCE (1950–)

Subpart P—[Amended]

1. The authority citation for subpart P of part 404 continues to read as follows:

Authority: Secs. 202, 205(a), (b), and (d)–(h), 216(i), 221(a) and (i), 222(c), 223, 225, and 702(a)(5) of the Social Security Act (42 U.S.C. 402, 405(a), (b), and (d)–(h), 416(i), 421(a) and (i), 422(c), 423, 425, and 902(a)(5)); sec. 211(b), Pub. L. 104–193, 110 Stat. 2105, 2189.

2. Section 404.1563 is amended by:

A. Revising paragraph (a),

B. Redesignating paragraphs (b) through (e) as paragraphs (c) through (f),

C. Adding a new paragraph (b), and

D. Revising redesignated paragraphs (c), (d) and (e) to re ad as follows:

§ 404.1563 Your age as a vocational factor.

(a) *General.* ''Age'' means your chronological age. When we decide whether you are disabled under § 404.1520(f)(1), we will consider your chronological age in combination with your residual functional capacity, education, and work experience; we will not consider your ability to adjust to other work on the basis of your age alone. In determining the extent to which age affects a person's ability to adjust to other work, we consider advancing age to be an increasingly limiting factor in the person's ability to make such an adjustment, as we explain in paragraphs (c) through (e) of this section. If you are unemployed but you still have the ability to adjust to other work, we will find that you are not disabled. In paragraphs (b) through (e) of this section and in appendix 2 to this subpart, we explain in more detail how we consider your age as a vocational factor.

(b) *How we apply the age categories.* When we make a finding about your ability to do other work under § 404.1520(f)(1), we will use the age categories in paragraphs (c) through (e) of this section. We will use each of the age categories that applies to you during the period for which we must determine if you are disabled. We will not apply the age categories mechanically in a borderline situation. If you are within a few days to a few months of reaching an older age category, and using the older age category would result in a determination or decision that you are disabled, we will consider whether to use the older age category after evaluating the overall impact of all the factors of your case.

(c) *Younger person.* If you are a younger person (under age 50), we generally do not consider that your age will seriously affect your ability to adjust to other work. However, in some circumstances, we consider that persons age 45–49 are more limited in their ability to adjust to other work than persons who have not attained age 45. See Rule 201.17 in appendix 2.

(d) *Person closely approaching advanced age.* If you are closely approaching advanced age (age 50–54), we will consider that your age along with a severe impairment(s) and limited work experience may seriously affect your ability to adjust to other work.

(e) *Person of advanced age.* We consider that at advanced age (age 55 or older) age significantly affects a person's ability to adjust to other work. We have special rules for persons of advanced age and for persons in this category who are closely approaching retirement age (age 60–64). See § 404.1568(d)(4).

* * * * *

3. Section 404.1568 is amended by adding a new paragraph (d)(4) to read as follows:

§ 404.1568 Skill requirements.

* * * * *

(d) *Skills that can be used in other work (transferability).* * * *

(4) *Transferability of skills for individuals of advanced age.* If you are of advanced age (age 55 or older), and you have a severe impairment(s) that limits you to *sedentary* or *light work*, we will find that you cannot make an adjustment to other work unless you have skills that you can transfer to other skilled or semiskilled work (or you have recently completed education which provides for direct entry into skilled

work) that you can do despite your impairment(s). We will decide if you have transferable skills as follows. If you are of advanced age and you have a severe impairment(s) that limits you to no more than *sedentary* work, we will find that you have skills that are transferable to skilled or semiskilled sedentary work only if the sedentary work is so similar to your previous work that you would need to make very little, if any, vocational adjustment in terms of tools, work processes, work settings, or the industry. (See § 404.1567(a) and § 201.00(f) of appendix 2.) If you are of advanced age but have not attained age 60, and you have a severe impairment(s) that limits you to no more than *light* work, we will apply the rules in paragraphs (d)(1) through (d)(3) of this section to decide if you have skills that are transferable to skilled or semiskilled light work (see § 404.1567(b)). If you are *closely approaching retirement age* (age 60–64) and you have a severe impairment(s) that limits you to no more than *light* work, we will find that you have skills that are transferable to skilled or semiskilled light work only if the light work is so similar to your previous work that you would need to make very little, if any, vocational adjustment in terms of tools, work processes, work settings, or the industry. (See § 404.1567(b) and Rule 202.00(f) of appendix 2 to this subpart.)

PART 416—SUPPLEMENTAL SECURITY INCOME FOR THE AGED, BLIND, AND DISABLED

Subpart I—[Amended]

4. The authority citation for subpart I of part 416 continues to read as follows:

Authority: Secs. 702(a)(5), 1611, 1614, 1619, 1631(a), (c), and (d)(1), and 1633 of the Social Security Act (42 U.S.C. 902(a)(5), 1382, 1382c, 1382h, 1383(a), (c), and (d)(1), and 1383b); secs. 4(c) and 5, 6(c)–(e), 14(a) and 15, Pub. L. 98–460, 98 Stat. 1794, 1801, 1802, and 1808 (42 U.S.C. 421 note, 423 note, 1382h note).

5. Section 416.963 is amended by:

A. Revising paragraph (a),

B. Redesignating paragraphs (b) through (e) as paragraphs (c) through (f),

C. Adding a new paragraph (b), and

D. Revising redesignated paragraphs (c), (d) and (e) to read as follows:

§ 416.963 Your age as a vocational factor.

(a) *General.* ''Age'' means your chronological age. When we decide whether you are disabled under § 416.920(f)(1), we will consider your chronological age in combination with your residual functional capacity, education, and work experience; we will not consider your ability to adjust to other work on the basis of your age alone. In determining the extent to which age affects a person's ability to adjust to other work, we consider advancing age to be an increasingly limiting factor in the person's ability to make such an adjustment, as we explain in paragraphs (c) through (e) of this section. If you are unemployed but you still have the ability to adjust to other work, we will find that you are not disabled. In paragraphs (b) through (e) of this section and in appendix 2 of subpart P of part 404 of this chapter, we explain in more detail how we consider your age as a vocational factor.

(b) *How we apply the age categories.* When we make a finding about your ability to do other work under § 416.920(f)(1), we will use the age categories in paragraphs (c) through (e) of this section. We will use each of the age categories that applies to you during the period for which we must determine if you are disabled. We will not apply the age categories mechanically in a borderline situation. If you are within a few days to a few months of reaching an older age category, and using the older age category would result in a determination or decision that you are disabled, we will consider whether to use the older age category after evaluating the overall impact of all the factors of your case.

(c) *Younger person.* If you are a younger person (under age 50), we generally do not consider that your age will seriously affect your ability to adjust to other work. However, in some circumstances, we consider that persons age 45–49 are more limited in their ability to adjust to other work than persons who have not attained age 45. See Rule 201.17 in appendix 2 of subpart P of part 404 of this chapter.

(d) *Person closely approaching advanced age.* If you are closely approaching advanced age (age 50–54), we will consider that your age along with a severe impairment(s) and limited work experience may seriously affect your ability to adjust to other work.

(e) *Person of advanced age.* We consider that at advanced age (age 55 or older) age significantly affects a person's ability to adjust to other work. We have special rules for persons of advanced age and for persons in this category who are closely approaching retirement age (age 60–64). See § 416.968(d)(4).

* * * * *

6. Section 416.968 is amended by adding a new paragraph (d)(4) to read as follows:

§ 416.968 Skill requirements.

* * * * *

(d) *Skills that can be used in other work (transferability).* * * *

(4) *Transferability of skills for individuals of advanced age.* If you are of *advanced age* (age 55 or older), and you have a severe impairment(s) that limits you to *sedentary* or *light* work, we will find that you cannot make an adjustment to other work unless you have skills that you can transfer to other skilled or semiskilled work (or you have recently completed education which provides for direct entry into skilled work) that you can do despite your impairment(s). We will decide if you have transferable skills as follows. If you are of advanced age and you have a severe impairment(s) that limits you to no more than *sedentary* work, we will find that you have skills that are transferable to skilled or semiskilled sedentary work only if the sedentary work is so similar to your previous work that you would need to make very little, if any, vocational adjustment in terms of tools, work processes, work settings, or the industry. (See § 416.967(a) and Rule 201.00(f) of appendix 2 of subpart P of part 404 of this chapter.) If you are of advanced age but have not attained age 60, and you have a severe impairment(s) that limits you to no more than *light* work, we will apply the rules in paragraphs (d)(1) through (d)(3) of this section to decide if you have skills that are transferable to skilled or semiskilled light work (see § 416.967(b)). If you are *closely approaching retirement age* (age 60–64) and you have a severe impairment(s) that limits you to no more than *light* work, we will find that you have skills that are transferable to skilled or semiskilled light work only if the light work is so similar to your previous work that you would need to make very little, if any, vocational adjustment in terms of tools, work processes, work settings, or the industry. (See § 416.967(b) and Rule 202.00(f) of appendix 2 of subpart P of part 404 of this chapter.)

[FR Doc. 00–8356 Filed 4–5–00; 8:45 am]

BILLING CODE 4191–02–U

DEPARTMENT OF EDUCATION

34 CFR Part 674

Federal Perkins Loan Program

AGENCY: Department of Education.

ACTION: Final regulations.

SUMMARY: The Secretary amends the Federal Perkins Loan Program regulations. The regulations replace all references and forms of the term ''Direct Loan'' in the Federal Perkins Loan

Program regulations with the acronym ''NDSL'' in order to eliminate confusion between the National Direct Student Loan (NDSL) Program and the William D. Ford Federal Direct Loan Program.

DATES: These regulations are effective May 8, 2000.

FOR FURTHER INFORMATION CONTACT: Ms. Vanessa Freeman, Program Specialist, U.S. Department of Education, 400 Maryland Avenue, SW., Room 3045, Regional Office Building 3, Washington, DC 20202–5449. Telephone: (202) 708–8242.

If you use a telecommunications device for the deaf (TDD), you may call the Federal Information Relay Service (FIRS) at 1–800–877–8339.

Individuals with disabilities may obtain this document in an alternative format (e.g., Braille, large print, audiotape, or computer diskette) on request to the contact person listed in the preceding paragraph.

SUPPLEMENTARY INFORMATION: Regulations amending the Federal Perkins Loan Program were published in proposed form on July 29, 1999. The proposed regulations were published in conformance with Section 492 of the Higher Education Act of 1965, as amended (the HEA), which requires the Secretary to conduct a negotiated rulemaking process to develop proposed regulations. Except in certain circumstances, the HEA also requires the Secretary to publish proposed regulations that conform to consensus agreements reached during the negotiated rulemaking process. In the preamble of the proposed regulations, the Secretary made a commitment to publish a technical corrections package that would replace all references to ''Direct Loan(s)'' in the Federal Perkins Loan Program and Student Assistance General Provisions regulations with ''National Direct Student Loan Program'' or the acronym ''NDSL.'' This commitment reflected an agreement by negotiators that such a change would clarify the regulations by eliminating the potential confusion between the National Direct Student Loan Program and the William D. Ford Federal Direct Loan Program. These final regulations replace the references to ''Direct Loan(s)'' in 34 CFR part 674 only. All references to ''Direct Loan(s)'' contained in the Student Assistance General Provisions refer correctly to the William D. Ford Federal Direct Loan Program.

Waiver of Negotiated Rulemaking

Under the Administrative Procedure Act (5 U.S.C. 553) the Department generally offers interested parties the opportunity to comment on proposed regulations. However, these regulations merely reflect technical changes that add clarity to the regulatory provisions. The changes do not establish or affect substantive policy and are made as a result of consensus reached by all affected parties during the negotiated rulemaking procedures required under section 492 of the HEA. Therefore, under 5 U.S.C. 553(b)(B), the Secretary has determined that the use of negotiated rulemaking or proposed regulations is unnecessary and contrary to the public interest.

Regulatory Flexibility Act Certification

The Secretary certifies that these regulations would not have a significant economic impact on a substantial number of small entities.

Because these regulations reflect technical changes that add clarity to the regulatory provisions, the regulations would not have an impact on small entities.

Paperwork Reduction Act of 1995

These regulations do not contain any information collection requirements.

Intergovernmental Review

This program is subject to the requirements of Executive Order 12372 and the regulations in 34 CFR part 79. The objective of the Executive order is to foster an intergovernmental partnership and a strengthened federalism by relying on processes developed by State and local governments for coordination and review of proposed Federal financial assistance.

In accordance with the order, we intend this document to provide early notification of the Department's specific plans and actions for this program.

Assessment of Education Impact

Based on our own review, we have determined that these final regulations do not require transmission of information that any other agency or authority of the United States gathers or makes available.

Electronic Access to This Document

You may view this document in text or Adobe Portable Document Format (PDF) on the Internet at the following sites:

http://ocfo.ed.gov/fedreg.htm
http://www.ed.gov/news.html
http://ifap.ed.gov/csb_html/fedlreg.htm

To use the PDF you must have the Adobe Acrobat Reader Program with Search, which is available free at the first of the previous sites. If you have questions about using the PDF, call the U.S. Government Printing Office (GPO), toll free, at 1–888–293–6498; or in the Washington, DC area at (202) 512–1530.

Note: The official version of this document is the document published in the **Federal Register**. Free Internet access to the official edition of the **Federal Register** and the Code of Federal Regulations is available on GPO Access at: http://www.access.gpo.gov/nara/index.html

(Catalog of Federal Domestic Assistance Number: 84.037 Federal Perkins Loan Program)

List of Subjects in 34 CFR Part 674

Loan programs—education, Student aid, Reporting and recordkeeping requirements.

Dated: March 31, 2000.

Richard W. Riley,

Secretary of Education.

For the reasons discussed in the preamble, the Secretary amends title 34 of the Code of Federal Regulations as follows:

PART 674—FEDERAL PERKINS LOAN PROGRAM

1. The authority for part 674 continues to read as follows:

Authority: 20 U.S.C. 1087aa–1087ii and 20 U.S.C. 421–429, unless otherwise noted.

2. Section 674.1 is amended by revising the reference to ''National Direct Student Loan Program'' to read ''National Direct Student Loan (NDSL) Program'' in paragraph (b)(1).

3. Section 674.2 is amended by removing the reference to ''Direct loan'' from the list of terms in paragraph (a).

4. The following sections in part 674 are amended by removing the word ''Direct'' and adding, in its place, ''NDSL'':

a. § 674.9(g)
b. § 674.19(e)(4)(iv)
c. § 674.31(b)(2)(i)(C)
d. § 674.33(b)(3)
e. § 674.40(b)
f. § 674.53 heading
g. § 674.53(a)(1)(ii)
h. § 674.53(b)(2)
i. § 674.53(c)(2)
j. § 674.56 heading
k. § 674.56(a)(2)
l. § 674.56(b)(2)
m. § 674.56(c)(2)
n. § 674.57 heading
o. § 674.57(a)(2)
p. § 674.58(a)(1)
q. § 674.61(a)
r. § 674.61(b)
s. § 674.61(d)
t. § 674.63(b)

5. The following sections in part 674 are amended by removing the words ''a

Direct'' and adding, in their place, ''an NDSL'':

a. § 674.59(b) heading
b. § 674.59(b)(1)
c. § 674.60(a)(2)

6. The following sections in part 674 are amended by removing the words ''a Direct Loan'' and adding, in their place, ''an NDSL'':

a. § 674.2 (definition of ''Student loan'')
b. § 674.31(b)(5)(ii)(A)
c. § 674.33(b)(6)(ii)
d. § 674.36(a)

7. The following sections in part 674 are amended by removing the words ''a Direct loan'' and adding, in their place, ''an NDSL'':

a.–b. § 674.31(b)(5)(ii)(B)
c. § 674.34(a)
d. § 674.34(c)(2)
e. § 674.37(a)(1)
f. § 674.53(a)(1)(i)

8. The following sections in part 674 are amended by removing the words ''Direct loan'' and adding, in their place, ''NDSL'':

a. § 674.9(h)(2)
b. § 674.53(b)(1) and (c)(1)
c. § 674.56(a)(1)
d. § 674.56(b)(1)
e. § 674.56(c)(1)

9. The following sections in part 674 are amended by removing the words ''Direct Loan'' and adding, in their place, ''NDSL'':

a. § 674.52(d)
b. § 674.57(a)(1)

10. The following sections in part 674 are amended by removing the words ''Direct loans'' and adding, in their place, ''NDSLs'':

a. § 674.2 (definition of ''Initial grace period'')
b. § 674.33(c)(2)
c. § 674.34 heading
d. § 674.36 heading
e. § 674.37 heading
f. § 674.42(c)(1)(i)
g. § 674.60 heading

11. The following sections are amended by removing the words ''Direct Loans'' and adding, in their place, ''NDSLs'':

a. § 674.12(a)
b. § 674.12(b)
c. § 674.31(b)(2)(i)(A)
d. § 674.31(b)(2)(i)(B)

12. Section 674.46 is amended by removing the words ''National Direct'' and adding, in their place, ''NDSL'' in paragraph (a)(1)(i).

[FR Doc. 00–8521 Filed 4–5–00; 8:45 am]

BILLING CODE 4000–01–U

ENVIRONMENTAL PROTECTION AGENCY

40 CFR Part 52

[TX–107–2–7424a; FRL–6567–5]

Approval and Promulgation of Implementation Plans; Texas; Control of Air Pollution From Volatile Organic Compounds, Vent Gas Control and Offset Lithographic Printing Rules

AGENCY: Environmental Protection Agency (EPA).

ACTION: Direct final rule.

SUMMARY: The EPA is taking direct final action on revisions to the Texas State Implementation Plan (SIP). This rulemaking covers three separate actions: Approving the Revisions to the 30 TAC, Chapter 115, Control of Air Pollution from Volatile Organic Compounds (VOC), Subchapter B, Division 2, Vent Gas Control (bakery oven emissions) rule as meeting our Reasonably Available Control Technology (RACT) requirements for controlling the VOC emission from such major sources in the Dallas/For Worth (D/FW) ozone nonattainment area; Converting EPA's limited approval of certain sections in 30 TAC, Chapter 115, Control of Air Pollution from VOC, Subchapter B, Division 2, Vent Gas Control (bakery oven emissions) rule to a full approval as meeting the RACT requirements for controlling the VOC emission from such major sources in the D/FW ozone nonattainment area. By this approval action, we are saying that Texas will be implementing the RACT for VOC emissions resulting from operation of the bakeries in the D/FW area; and Approving that the revisions to the 30 TAC, Chapter 115, Control of Air Pollution from Volatile Organic Compounds (VOC), Subchapter E, Division 4, Offset Lithography Printing as meeting our RACT requirements for controlling the VOC emission from such major sources in the D/FW ozone nonattainment area. By this approval action, we are saying that Texas will be implementing the RACT for VOC emissions resulting from operation of the offset lithography printing sources in the D/FW area.

The EPA is approving these SIP revisions to regulate emissions of VOCs as meeting RACT in accordance with the requirements of the Federal Clean Air Act (the Act).

DATES: This rule is effective on June 5, 2000 without further notice, unless EPA receives adverse comment by May 8, 2000. If EPA receives such comment, EPA will publish a timely withdrawal in the **Federal Register** informing the public that this rule will not take effect.

ADDRESSES: Written comments on this action should be addressed to Mr. Thomas H. Diggs, Chief, Air Planning Section (6PD–L), at the EPA Region 6 Office listed below. Copies of documents relevant to this action including the Technical support Document (TSD) are available for public inspection during normal business hours at the following locations. Anyone wanting to examine these documents should make an appointment with the appropriate office at least two working days in advance.

Environmental Protection Agency, Region 6, Air Planning Section (6PD–L), 1445 Ross Avenue, Dallas, Texas 75202–2733.

Texas Natural Resource Conservation Commission, Office of Air Quality, 12124 Park 35 Circle, Austin, Texas 78753.

FOR FURTHER INFORMATION CONTACT: Mr. Alan Shar, P.E., Air Planning Section (6PD–L), EPA Region 6, 1445 Ross Avenue, Dallas, Texas 75202–2733, telephone (214) 665–6691.

SUPPLEMENTARY INFORMATION:

Table of Contents

1. What action is EPA taking?
2. What action is EPA not taking in this rulemaking?
3. Why do we regulate VOCs?
4. Where can I find EPA guidelines on bakery oven emissions?
5. Where can I find EPA guidelines on offset lithographic printing?
6. What are the bakery oven emissions rule changes?
7. What are the offset lithographic printing rule changes?
8. What is a nonattainment area?
9. What are Alternative Control Techniques (ACTs)?
10. What is Reasonably Available Control Technology (RACT)?
11. What is a State Implementation Plan?
12. What is the Federal approval process for a SIP?
13. What does Federal approval of a SIP mean to me?
14. What areas in Texas will this action affect?

Throughout this document ''we,'' ''us,'' and ''our'' means EPA.

1. What Action Is EPA Taking?

On March 16, 1999, the Governor of Texas submitted a rule revision to the Chapter 115, ''Control of Air Pollution From Volatile Organic Compounds,'' as a revision to the SIP for bakery operations and offset lithographic printing operations. On May 22, 1997, EPA gave limited approval to sections 115.122(a)(3), 115.126(a)(4), 115.126(a)(5), 115.127(a)(5) and

115.129(2)–115.129(5) of Chapter 115 concerning to bakery operations. *See* 64 FR 3841. For bakery operations, the TNRCC submitted on March 16, 1999, revisions to sections 115.122, 115.123, and 115.126. This rulemaking will approve revisions to Sections 115.122 , 115.123, 115.126 in the D/FW ozone nonattainment area. Specifically, we are approving revisions to sections 115.122(a)(3)(B), 115.122(a)(3)(C), 115.122(a)(3)(E)(ii), 115.123(a)(1) and (2), a new section 115.126(a)(1)(C) and (D), and revisions to 115.126(a)(3)(A) and (B) concerning bakery oven emissions in the D/FW ozone nonattainment area. We are converting the limited approval to a full approval of sections 115.122(a)(3), 115.126(a)(4), 115.126(a)(5), 115.127(a)(5) and 115.129(2)–115.129(5).

For offset lithographic printing operations, this rulemaking will approve revisions to sections 115.440, 115.443, 115.446, and 115.449 in the D/FW ozone nonattainment area. We are also, approving a new section 115.440, revisions to section 115.443, removal of section 115.446(2)(D), revisions to section 115.446(8), and section 115.449(b) concerning offset lithographic printing operations in the D/FW ozone nonattainment area.

Originally, The TNRCC submitted the offset lithographic printing rules to us in August 1993, and we approved those rules in a limited approval fashion. *See* 62 FR 27964, published on May 22, 1997. Later on, we approved these rules, among many others, in a full approval fashion as a part of the 15 percent Rate of Progress contingency plan for the D/FW ozone nonattainment area. *See* 64 FR 3841, published on January 26, 1999.

Previously, the D/FW ozone nonattainment area was classified as moderate. The VOC major source threshold for a moderate area is 100 tpy. Texas submitted and we approved a declaration that there were no major (100 tpy) offset lithography printing sources in the D/FW area. *See* 61 FR 55894, published on October 30, 1996.

The D/FW is now classified as a serious ozone nonattainment area. The VOC major source threshold for a serious ozone nonattainment area is 50 tpy. Texas has now revised its VOC rules to insure that any offset lithography printing sources greater than 50 tpy will have to implement RACT.

In this document, we are now approving revisions to the Texas SIP concerning control of VOC emissions from bakery oven emissions and offset lithographic printing provisions as meeting the RACT requirements for controlling the VOC emissions from such operations in the D/FW ozone nonattainment area. For more information on the SIP revision and EPA's RACT evaluation, please refer to our TSD dated November 1999.

2. What Action Is EPA Not Taking in This Rulemaking?

In this document, we are not acting on the following: (1) attainment demonstration plan for the D/FW area, (2) RACT regulations for controlling VOCs from bakeries in ozone nonattainment areas other than D/FW area, and (3) RACT regulations for controlling VOCs from offset lithographic printing operations in ozone nonattainment areas other than D/FW area.

3. Why Do We Regulate VOCs?

Oxygen in the atmosphere reacts with VOCs and Oxides of Nitrogen to form ozone, a key component of urban smog. Inhaling even low levels of ozone can trigger a variety of health problems including chest pains, coughing, nausea, throat irritation, and congestion. It also can worsen bronchitis and asthma. Exposure to ozone can also reduce lung capacity in healthy adults.

4. Where Can I Find EPA Guidelines on Bakery Oven Emissions?

You can find our guidelines on bakery oven emissions in the document number EPA–453/R–92–017, ''Alternative Control Technology for Bakery Oven Emissions.'' You can also refer to the Memorandum from John S. Seitz, Director of Air Quality Planning and Standards, dated February 15, 1995 (Bakery Memo), that addresses issues concerning bakery RACT requirements. We have included a copy of the Bakery Memo in our TSD dated November 1999, for reference purposes.

5. Where Can I Find EPA Guidelines on Offset Lithographic Printing?

You can find our guidelines on offset lithographic printing in the document number EPA–453/R–94–054, ''Alternative Control Techniques Document: Offset Lithographic Printing.'' The TNRCC submitted its Offset Lithography Printing rules to us in August 1993. We have evaluated the Texas Offset Lithography Printing rules against our guidance document and have determined that the Texas Offset Lithography Printing rules meet our RACT requirement for such sources.

6. What Are the Bakery Oven Emissions Rule Changes?

The intended purpose of this rule is to reduce VOC emissions and comply with the RACT requirements. The previously limited approved bakery rules, 62 FR 27965, May 22, 1997, called for 30 percent control in the H/G, B/PA, and D/FW areas, and we did not consider the 30 percent control as meeting the RACT.

The proposed rule revision calls for a minimum of 80 percent control in the D/FW area and we are considering the 80 percent control as meeting the RACT. Specifically, the revisions to Chapter 115 will modify the vent gas control rule by: (1) lowering the applicability threshold from 100 to 50 tpy for bakeries in the D/FW ozone nonattainment area, and (2) prohibiting the banking of emission reductions in the 30–90 percent range for major source bakeries in the D/FW ozone nonattainment area. Bakeries in the D/FW ozone nonattainment area must comply with this rule as soon as practicable, but no later than December 31, 2000. *See* 30 TAC Section 115.126(4)(A). You can find the appropriateness of a compliance date of December 31, 2000 (beyond the November 15, 1999, attainment deadline), in the VOC policy Memorandum from J. Craig Potter, Assistant Administrator for Air and Radiation, dated August 7, 1986, titled ''Policy on SIP Revisions Requesting Compliance Date Extensions for VOC sources'' (Extension Memo). We have included a copy of the Extension Memo in our TSD, dated November 1999, for reference purposes. The Extension Memo provides that the change in a deadline for a VOC source must be expeditious and practicable. EPA generally views two years as an acceptable time frame to implement RACT requirements. The Texas deadline is less than two years. We are of the opinion that the compliance date of December 31, 2000, time frame is practicable compared with the attainment demonstration dates of other severe ozone nonattainment areas in the country. We will closely examine and question any attempts to extend the compliance date beyond the December 31, 2000, for such VOC sources in the D/FW area in future.

Originally, we acted on the Texas 30 TAC, Chapter 115, Control of Air Pollution from Volatile Organic Compounds (VOC), Subchapter B, Division 2, Vent Gas Control (bakery oven emissions) rule in a limited approval fashion, 62 FR 27965, May 22, 1997, on the basis that the limited approval would strengthen the SIP. The May 22, 1997, final rulemaking gave limited approval to the Texas rule, which among other things, allowed 30 percent VOC control for these sources. The May 22, 1997, final rulemaking also

stated that the EPA would be publishing a determination regarding RACT in a future **Federal Register** action. In addition, the Bakery Memo states that RACT should result in VOC emissions reductions of 80 to 95 percent for large bakery operations. The Texas rule revision (a) requires a minimum of 80 percent reduction in VOC emissions from the bakery's 1990 baseline emission inventory (see Section 115.122(a)(3)(B)), and (b) prohibits the banking of emission reductions in the 30–90 percent range for major source bakeries in the D/FW ozone nonattainment area. For these reasons, we are of the opinion that this rule now meets the requirements of the RACT for the D/FW area and are approving these rule with its revisions as RACT.

For detailed evaluation of the specific provisions of the bakery oven emissions changes, please see pages 2 through 5 of our TSD dated November 1999.

7. What Are the Offset Lithographic Printing Rule Changes?

The intended purpose of this rule is to reduce VOC emissions and comply with the requirements of the RACT. Specifically, this rule applies to sources located or operating in the D/FW ozone nonattainment area. This proposed rule revision will: (1) create a new Section 115.440 concerning offset lithographic printing definitions, and (2) lower the applicability threshold from 100 to 50 tpy for offset lithographic printing operations in the D/FW ozone nonattainment area. The offset lithographic printing operations in the D/FW ozone nonattainment area must comply with this rule as soon as practicable, but no later than December 31, 2000. *See* 30 TAC Section 115.449(b). You can find the appropriateness of a compliance date of December 31, 2000 (beyond the November 15, 1999, attainment deadline), in the VOC policy Memorandum from J. Craig Potter, Assistant Administrator for Air and Radiation, dated August 7, 1986, titled ''Policy on SIP Revisions Requesting Compliance date Extensions for VOC sources'' (Extension Memo). We have included a copy of the Extension Memo in our TSD, dated November 1999, for reference purposes. The Extension Memo provides that the change in a deadline for a VOC source must be expeditious and practicable. EPA generally views two years as an acceptable time frame to implement RACT requirements. The Texas deadline is less than two years. We are of the opinion that the compliance date of December 31, 2000, time frame is practicable compared with the attainment demonstration dates of other severe ozone nonattainment areas in the country. We will closely examine and question any attempts to extend the compliance date beyond the December 31, 2000, for such VOC sources in the D/FW area in future.

Other revisions are administrative in nature, e.g., changing the word ''section'' to ''division,'' and we are approving them for the D/FW ozone nonattainment area. As we stated in the summary section of this document, the TNRCC submitted its Offset Lithography Printing rules to us in August 1993. For rulemaking history of the Texas Offset Lithography Printing rules, please refer to section 1 of this document. For detailed evaluation of the specifics of the offset lithographic printing rule, please see pages 6 and 7 of our TSD dated November 1999.

8. What Is a Nonattainment Area?

A nonattainment area is a geographic area in which the level of a criteria air pollutant is higher than the level allowed by Federal standards. A single geographic area may have acceptable levels of one criteria air pollutant but unacceptable levels of one or more other criteria air pollutants; thus, a geographic area can be attainment for one criteria pollutant and nonattainment for another criteria pollutant at the same time. It has been estimated that 60 percent of Americans live in nonattainment areas.

9. What Are Alternative Control Techniques (ACTs)?

Section 183(c) of the Act provides that we will issue technical documents which identify alternative controls for stationary sources of VOC which emit, when uncontrolled, 25 tpy or more of this pollutant. We have to revise and update these ACT documents as needed. We generate the information in the ACT documents from our papers, literature sources and contacts, control equipment vendors, engineering firms, and Federal, State, and local regulatory agencies. States can use information in the ACT to develop their Reasonably Available Control Technology regulations. Sections 3 and 4 of this document name the titles of EPA's ACT documents for bakery oven emissions and offset lithographic printing operations.

10. What Is Reasonably Available Control Technology?

We have defined RACT as the lowest emission limitation that a particular source can meet by applying a control technique that is reasonably available considering technological and economic feasibility. *See* 44 FR 53761, September 17, 1979. A state may choose to develop its own RACT requirements on a case by case basis, considering the economic and technical circumstances of an individual source. Section 172 of the Act contains general requirements for States to implement RACT in areas that do not meet the National Ambient Air Quality Standard (NAAQS). Section 182(b)(2) of the Act contains more specific requirements for moderate and above ozone nonattainment areas.

11. What Is a State Implementation Plan?

Section 110 of the Act requires States to develop air pollution regulations and control strategies to ensure that State air quality meets the National Ambient Air Quality Standards (NAAQS) that EPA has established. Under Section 109 of the Act, EPA established the NAAQS to protect public health. The NAAQS address six criteria pollutants. These criteria pollutants are: carbon monoxide, nitrogen dioxide, ozone, lead, particulate matter, and sulfur dioxide.

Each State must submit these regulations and control strategies to us for approval and incorporation into the federally enforceable SIP. Each State has a SIP designed to protect air quality. These SIPs can be extensive, containing State regulations or other enforceable documents and supporting information such as emission inventories, monitoring networks, and modeling demonstrations.

12. What Is the Federal Approval Process for a SIP?

When a State wants to incorporate its regulations into the federally enforceable SIP, the State must formally adopt the regulations and control strategies consistent with State and Federal requirements. This process includes a public notice, a public hearing, a public comment period, and a formal adoption by a state-authorized rulemaking body.

Once a State adopts a rule, regulation, or control strategy, the State may submit the adopted provisions to us and request that we include these provisions in the federally enforceable SIP. We must then decide on an appropriate Federal action, provide public notice on this action, and seek additional public comment regarding this action. If we receive adverse comments, we must address them prior to a final action.

Under section 110 of the Act, when we approve all State regulations and supporting information, those State regulations and supporting information become a part of the federally approved SIP. You can find records of these SIP actions in the Code of Federal

Regulations at Title 40, part 52, entitled ''Approval and Promulgation of Implementation Plans.'' The actual State regulations that we approved are not reproduced in their entirety in the CFR but are ''incorporated by reference,'' which means that we have approved a given State regulation with a specific effective date.

13. What Does Federal Approval of a SIP Mean to Me?

A State may enforce State regulations before and after we incorporate those regulations into a federally approved SIP. After we incorporate those regulations into a federally approved SIP, both EPA and the public may also take enforcement action against violators of these regulations.

14. What Areas in Texas Will This Action Affect?

These rules we are approving today will affect the D/FW ozone nonattainment area. The D/FW area is classified as serious ozone nonattainment and includes the following counties: Collin, Dallas, Denton, and Tarrant.

If you are in one of these counties, you need to refer to these rules to find out if and how these rules will affect you.

The EPA is publishing this rule without prior proposal because we view this as a noncontroversial amendment and anticipate no adverse comments. However, in the ''Proposed Rules'' section of today's **Federal Register** publication, we are publishing a separate document that will serve as the proposal to approve the SIP revision if adverse comments are received. This rule will be effective on June 5, 2000 without further notice unless we receive adverse comment by May 8, 2000. If EPA receives adverse comments, we will publish a timely withdrawal in the **Federal Register** informing the public that the rule will not take effect. We will address all public comments in a subsequent final rule based on the proposed rule. We will not institute a second comment period on this action. Any parties interested in commenting must do so at this time.

Administrative Requirements

A. Executive Order 12866

The Office of Management and Budget (OMB) has exempted this regulatory action from Executive Order 12866, entitled ''Regulatory Planning and Review.''

B. Executive Order 13132

Executive 13132, entitled ''Federalism'' (64 FR 43255, August 10, 1999) revokes and replaces Executive Order 12612, ''Federalism,'' and Executive Order 12875, ''Enhancing the Intergovernmental Partnership.'' Executive Order 13132 requires EPA to develop an accountable process to ensure ''meaningful and timely input by State and local officials in the development of regulatory policies that have federalism implications.'' ''Policies that have federalism implications'' is defined in the Executive Order to include regulations that have ''substantial direct effects on the States, on the relationship between the national government and the States, or on the distribution of power and responsibilities among the various levels of government.'' Under Executive Order 13132, EPA may not issue a regulation that has federalism implications, that imposes substantial direct compliance costs, and that is not required by statute, unless the Federal government provides the funds necessary to pay the direct compliance costs incurred by State and local governments, or EPA consults with State and local officials early in the process of developing the proposed regulation. The EPA also may not issue a regulation that has federalism implications and that preempts State law unless the Agency consults with State and local officials early in the process of developing the proposed regulation.

This final rule will not have substantial direct effects on the States, on the relationship between the national government and the States, or on the distribution of power and responsibilities among the various levels of government, as specified in Executive Order 13132, because the rule approves a State rule implementing a federal standard, and does not alter the distribution of power and responsibilities established in the Act. Thus, the requirements of section 6 of the Executive Order do not apply to this rule.

C. Executive Order 13045

Executive Order 13045, entitled ''Protection of Children from Environmental Health Risks and Safety Risks'' (62 FR 19885, April 23, 1997), applies to any rule that: (1) Is determined to be ''economically significant'' as defined under Executive Order 12866, and (2) concerns an environmental health or safety risk that EPA has reason to believe may have a disproportionate effect on children. If the regulatory action meets both criteria, the Agency must evaluate the environmental health or safety effects of the planned rule on children, and explain why the planned regulation is preferable to other potentially effective and reasonably feasible alternatives considered by the Agency.

The EPA interprets Executive Order 13045 as applying only to those regulatory actions that are based on health or safety risks, such that the analysis required under section 5–501 of the Order has the potential to influence the regulation. This final rule is not subject to Executive Order 13045 because it approves a State program.

D. Executive Order 13084

Under Executive Order 13084, EPA may not issue a regulation that is not required by statute, that significantly or uniquely affects the communities of Indian tribal governments, and that imposes substantial direct compliance costs on those communities, unless the Federal government provides the funds necessary to pay the direct compliance costs incurred by the tribal governments, or EPA consults with those governments. If EPA complies by consulting, Executive Order 13084 requires EPA to provide to the OMB, in a separately identified section of the preamble to the rule, a description of the extent of EPA's prior consultation with representatives of affected tribal governments, a summary of the nature of their concerns, and a statement supporting the need to issue the regulation. In addition, Executive Order 13084 requires EPA to develop an effective process permitting elected officials and other representatives of Indian tribal governments ''to provide meaningful and timely input in the development of regulatory policies on matters that significantly or uniquely affect their communities.''

Today's rule does not significantly or uniquely affect the communities of Indian tribal governments. This action does not involve or impose any requirements that affect Indian tribes. Accordingly, the requirements of section 3(b) of Executive Order 13084 do not apply to this rule.

E. Regulatory Flexibility Act

The Regulatory Flexibility Act, 5 U.S.C. 600 *et seq.*, generally requires an agency to conduct a regulatory flexibility analysis of any rule subject to notice and comment rulemaking requirements unless the agency certifies that the rule will not have a significant economic impact on a substantial number of small entities. Small entities include small businesses, small not-for-profit enterprises, and small governmental jurisdictions. This final rule will not have a significant impact on a substantial number of small entities

because SIP approvals under section 110 and subchapter I, part D of the Act do not create any new requirements but simply approve requirements that the State is already imposing. Therefore, because the Federal SIP approval does not create any new requirements, I certify that this action will not have a significant economic impact on a substantial number of small entities. Moreover, due to the nature of the Federal-State relationship under the Act, preparation of a flexibility analysis would constitute Federal inquiry into the economic reasonableness of state action. The Act forbids EPA to base its actions concerning SIPs on such grounds. *See Union Electric Co.* v. *U.S. EPA,* 427 U.S. 246, 255–66 (1976); 42 U.S.C. 7410(a)(2).

F. Unfunded Mandates

Under section 202 of the Unfunded Mandates Reform Act of 1995, signed into law on March 22, 1995, EPA must prepare a budgetary impact statement to accompany any proposed or final rule that includes a Federal mandate that may result in estimated annual costs to State, local, or tribal governments in the aggregate; or to private sector, of $100 million or more. Under section 205, EPA must select the most cost-effective and least burdensome alternative that achieves the objectives of the rule and is consistent with statutory requirements. Section 203 requires EPA to establish a plan for informing and advising any small governments that may be significantly or uniquely impacted by the rule.

The EPA has determined that the approval action promulgated does not include a Federal mandate that may result in estimated annual costs of $100 million or more to either State, local, or tribal governments in the aggregate, or to the private sector. This Federal action approves pre-existing requirements under State or local law, and imposes no new requirements. Accordingly, no additional costs to State, local, or tribal governments, or to the private sector, result from this action.

G. Submission to Congress and the Comptroller General

The Congressional Review Act, 5 U.S.C. 801 *et seq.*, as added by the Small Business Regulatory Enforcement Fairness Act of 1996, generally provides that before a rule may take effect, the agency promulgating the rule must submit a rule report, which includes a copy of the rule, to each House of the Congress and to the Comptroller General of the United States. The EPA will submit a report containing this rule and other required information to the U.S. Senate, the U.S. House of Representatives, and the Comptroller General of the United States prior to publication of the rule in the **Federal Register**. A major rule cannot take effect until 60 days after it is published in the **Federal Register**. This action is not a ''major'' rule as defined by 5 U.S.C. 804(2). This rule will be effective June 5, 2000.

H. Petitions for Judicial Review

Under section 307(b)(1) of the Act, petitions for judicial review of this action must be filed in the United States Court of Appeals for the appropriate circuit by June 5, 2000. Filing a petition for reconsideration by the Administrator of this final rule does not affect the finality of this rule for the purposes of judicial review nor does it extend the time within which a petition for judicial review may be filed, and shall not postpone the effectiveness of such rule or action. This action may not be challenged later in proceedings to enforce its requirements. *See* section 307(b)(2) of the Act.

List of Subjects in 40 CFR Part 52

Environmental protection, Air pollution control, Intergovernmental relations, Ozone, Reporting and recordkeeping requirements, Volatile organic compounds.

Dated: March 21, 2000.

Lynda F. Carroll,

Acting Regional Administrator, Region 6.

Part 52, chapter I, title 40 of the Code of Federal Regulations is amended as follows:

PART 52—[AMENDED]

1. The authority citation for Part 52 continues to read as follows:

Authority: 42 U.S.C. 7401 *et seq.*

Subpart SS—Texas

2. In § 52.2270 the table in paragraph (c) is amended under Chapter 115 by:

a. Removing the entries for ''115.121–115.129'' and ''115.442–115.449.''

b. Adding in numerical order entries for sections 115.121, 115.122, 115.123, 115.125, 115.126, 115.127, 115.129, 115.440, 115.443, 115.446, and 115.449 as RACT for the D/FW area.

c. Add the heading ''Vent Gas Control'' above the entry for section 115.121 under the column ''Title/Subject''; and add the heading ''Offset Lithographic Printing'' above the entry for Section 115.440 under the column ''Title/Subject''.

The removal and additions read as follows:

§ 52.2270 Identification of plan.

* * * * *

(c) * * *

EPA APPROVED REGULATIONS IN THE TEXAS SIP

State citation	Title/subject	State submittal/approval date	EPA approval date	Explanation
*	*	*	*	*
Chapter 115 (Regulation 5)—Control of Air Pollution from Volatile Organic Compounds				
*	*	*	*	*
Vent Gas Control				
Section 115.121	Emission Specifications	March 21, 1999	April 6, 2000	Ref—52.2270(c)(104), Approved as RACT for the D/FW 1-hr ozone area only.
Section 115.122	Control Requirements	March 21, 1999	April 6, 2000	Ref—52.2270(c)(104), Approved as RACT for the D/FW 1-hr ozone area only.
Section 115.123	Alternate Control Requirements.	March 21, 1999	April 6, 2000	Ref—52.2270(c)(104), Approved as RACT for the D/FW 1-hr ozone area only.
Section 115.125	Testing Requirements	March 21, 1999	April 6, 2000	Ref—52.2270(c)(104), Approved as RACT for the D/FW 1-hr ozone area only.

EPA APPROVED REGULATIONS IN THE TEXAS SIP—Continued

State citation	Title/subject	State submittal/ approval date	EPA approval date	Explanation
Section 115.126	Monitoring and Recordkeeping Requirements.	March 21, 1999	April 6, 2000	Ref—52.2270(c)(104), Approved as RACT for the D/FW 1-hr ozone area only.
Section 115.127	Exemptions	March 21, 1999	April 6, 2000	Ref—52.2270(c)(104), Approved as RACT for the D/FW 1-hr ozone area only.
Section 115.129	Counties and Compliance Schedule.	March 21, 1999	April 6, 2000	Ref—52.2270(c)(104), Approved as RACT for the D/FW 1-hr ozone area only.
*	* *	*	*	* *
		Offset Lithographic Printing		
Section 115.440	Definitions	March 21, 1999	April 6, 2000	New.
*	* *	*	*	* *
Section 115.443	Alternate Control Requirements.	March 21, 1999	April 6, 2000	Ref—52.2270(c)(104), 52.2270(c)(105) (i)(P), Approved as RACT for the D/FW 1-hr ozone area only.
*	* *	*	*	* *
Section 115.446	Monitoring and Recordkeeping Requirements.	March 21, 1999	April 6, 2000	Ref—52.2270(c)(104), 52.2270(c)(105) (i)(P), Approved as RACT for the D/FW 1-hr ozone area only.
Section 115.449	Counties and Compliance Schedules.	March 21, 1999	April 6, 2000	Ref—52.2270(c)(104), 52.2270(c)(105) (i)(P), Approved as RACT for the D/FW 1-hr ozone area only.
*	* *	*	*	* *

[FR Doc. 00–7732 Filed 4–5–00; 8:45 am]

BILLING CODE 6560–50–U

ENVIRONMENTAL PROTECTION AGENCY

40 CFR Part 52

[FRL–6572–6]

Notice of Approval of Prevention of Significant Deterioration (PSD) Permits to Sutter Power Plant, Calpine Corporation (NSR 4–4–4, SAC 98–01), South Point Power Plant, Calpine Corporation (NSR 4–4–4, AZ 98–01), and the La Paloma Power Plant, La Paloma Generating Company (NSR 4–4–4, SJ 98–01)

AGENCY: Environmental Protection Agency (EPA).

ACTION: Notice of final action.

SUMMARY: Notice is hereby given that the EPA issued PSD permits to the following applicants:

(1) The Sutter Power Plant, granting approval to construct two combustion turbine generators with waste heat recovery steam generators producing a total of 500 megawatts. The permit became effective on December 2, 1999 and includes the following emission limits: NO_X at 2.5 ppm (maximum 19 lbs/hr, normal operation), CO at 4.0 ppm (maximum 34.3 lbs/hr, normal operation), and PM10 at 11.5 lbs/hr.

(2) The South Point Power Plant granting approval to construct two combustion turbine generators with waste heat recovery steam generators and associated equipment producing a total of 500 megawatts. The permit became effective on May 24, 1999 and includes the following emission limits: NO_X at 3.0 ppm (maximum 24 lbs/hr), CO at 10 ppm (maximum 158.3 lbs/hr), and PM10 at a maximum of 22.8 lbs/hr.

(3) The La Paloma Power Plant granting approval to construct four combustion turbine generators with waste heat recovery steam generators and associated equipment producing a total of 1048 megawatts. The permit became effective on July 27, 1999 and includes the following emission limits: NO_X at 2.5 ppm (maximum 17.3 lbs/hr), CO at 6 ppm (maximum 25.3 lbs/hr) at loads above 221 megawatts and 10 ppm (maximum 34.1 lbs/hr) at loads at or below 221 megawatts, and SO_2 at 89.5 lbs/day for each gas turbine.

DATES: The PSD permits are reviewable under section 307(b)(1) of the Clean Air Act only in the Ninth Circuit Court of Appeals. A petition for review must be filed by June 5, 2000.

FOR FURTHER INFORMATION CONTACT: Copies of the permits are available for public inspection upon request; address request to: Steven Barhite (AIR–3), U.S. Environmental Protection Agency, Region 9, 75 Hawthorne Street, San Francisco, CA 94105, (415) 744–1260.

SUPPLEMENTARY INFORMATION: Best Available Control Technology (BACT) requirements at all three facilities include dry low NO_X burners and Selective Catalytic Reduction for the control of NO_X emissions, low sulfur fuels for the control of SO_2 and PM10 emissions, and good combustion design and operation for the control of PM10, CO, and VOC emissions. In addition, the Sutter and La Paloma facilities will utilize an oxidation catalyst to control CO emissions. Air quality impact modelling was required for NO_X, SO_2, CO and PM10. Continuous emission monitoring is required for NO_X and CO and all three sources are subject to New Source Performance Standards, Subparts A and GG.

Dated: March 24, 2000.

David P. Howekamp,

Director, Air Division, Region 9.

[FR Doc. 00–8537 Filed 4–5–00; 8:45 am]

BILLING CODE 6560–50–P

ENVIRONMENTAL PROTECTION AGENCY

40 CFR Part 52

[FRL–6572–5]

Notice of Prevention of Significant Deterioration (PSD) Final Determination for Delta Energy Center, Pittsburg, CA

AGENCY: Environmental Protection Agency.

ACTION: Notice of final action.

SUMMARY: The purpose of this document is to announce that on February 9, 2000, the U.S. Environmental Protection Agency (EPA) Environmental Appeals Board (Board) dismissed a petition for review of a permit issued for the Delta Energy Center by the Bay Area Air Quality Management District (District) pursuant to the Prevention of Significant Deterioration of Air Quality (PSD) regulations under 40 CFR 52.21.

DATES: The effective date for the Board's decision is February 9, 2000.

FOR FURTHER INFORMATION CONTACT: Martha Larson, Permits Office, Air Division, U.S. EPA Region IX, 75 Hawthorne Street, San Francisco, CA 94105, (415) 744–1170.

SUPPLEMENTARY INFORMATION: On October 21, 1999, the District issued a Final Determination of Compliance (Application Number 19414) to Delta Energy Center for the construction of a new power plant in Pittsburg, CA. The Final Determination of Compliance also constituted a final PSD Permit under 40 CFR 52.21 and the terms of the District's delegation of authority from the U.S. EPA under 40 CFR 52.21(u). On November 16, 1999, Californians for Renewable Energy, Inc. (''CRE'') petitioned the Board to review this permit. On February 9, 2000, the Board dismissed CRE's petition due to failure to meet the standing requirements necessary for obtaining review of PSD permits as set forth in 40 CFR part 124 (see *In re: Delta Energy Center*, PSD Appeal No. 99–76).

Pursuant to 40 CFR 124.19(f)(2), for purposes of judicial review, final Agency action occurs when a final PSD permit is issued and Agency review procedures are exhausted. This notice, being published today in the FR, constitutes notice of the final Agency action denying review of the PSD permit. If available, judicial review of these determinations under section 307(b)(1) of the CAA may be sought only by the filing of a petition for review in the United States Court of Appeals for the appropriate circuit within 60 days from the date on which this determination is published in the FR. Under section 307(b)(2) of this Act, this determination shall not be subject to later judicial review in any civil or criminal proceedings for enforcement.

Dated: March 24, 2000.

David P. Howekamp,

Director, Air Division, Region IX.

[FR Doc. 00–8538 Filed 4–5–00; 8:45 am]

BILLING CODE 6560–50–P

Proposed Rules

Federal Register
Vol. 65, No. 67
Thursday, April 6, 2000

This section of the FEDERAL REGISTER contains notices to the public of the proposed issuance of rules and regulations. The purpose of these notices is to give interested persons an opportunity to participate in the rule making prior to the adoption of the final rules.

NUCLEAR REGULATORY COMMISSION

10 CFR Parts 71 and 73

RIN 3150–AG41

Advance Notification to Native American Tribes of Transportation of Certain Types of Nuclear Waste

AGENCY: Nuclear Regulatory Commission.

ACTION: Advance notice of proposed rulemaking: Reopening of comment period.

SUMMARY: The Nuclear Regulatory Commission (NRC) published for public comment an advanced notice of proposed rulemaking (ANPR) on December 21, 1999 (64 FR 71331), that would require licensees to notify Federally recognized Native American Tribes of shipments of certain types of high-level radioactive waste, including spent nuclear fuel, before the shipments are transported to or across the boundary of Tribal lands. In a letter to the Secretary of the Commission, dated March 1, 2000, the National Congress of American Indians (NCAI) requested a 90-day extension of the comment period. The comment period for the ANPR expired on March 22, 2000. In view of the importance of the issues described in the ANPR and the information needed to resolve these issues, the amount of additional time that the NCAI requested to provide comments on behalf of its 210 constituent Tribal governments is reasonable. The NRC is reopening the comment period for 90 days. The comment period will expire on July 5, 2000.

DATES: The comment period has been reopened and will expire on July 5, 2000. Comments received after this date will be considered if it is practical to do so, but the Commission is able to assure consideration only for comments received on or before this date.

ADDRESSES: Mail comments to: The Secretary, U.S. Nuclear Regulatory Commission, Washington, DC 20555–0001, Attention: Rulemakings and Adjudications Staff.

Hand-deliver comments to: 11555 Rockville Pike, Rockville, Maryland, between 7:30 am and 4:15 pm on Federal workdays.

You may also provide comments via the NRC's interactive rulemaking website (http://ruleforum.llnl.gov). This site provides the availability to upload comments as files (any format), if your web browser supports that function. For information about the interactive rulemaking site, contact Ms. Carol Gallagher (301) 415–5905; e-mail CAG@nrc.gov.

Certain documents related to this rulemaking, including comments received, may be examined at the NRC Public Document Room, 2120 L Street NW (Lower Level), Washington, DC. These same documents also may be viewed and downloaded electronically via the rulemaking website.

FOR FURTHER INFORMATION CONTACT:

Stephanie P. Bush-Goddard, Ph.D., Office of Nuclear Material Safety and Safeguards, U.S. Nuclear Regulatory Commission, Washington, DC 20555–0001, telephone (301) 415–6257, e-mail SPB@nrc.gov; or

Dorothy M. Gauch, Office of the General Counsel, U.S. Nuclear Regulatory Commission, Washington, DC 20555–0001, telephone (301) 415–1630, e-mail DMG5@nrc.gov.

Dated at Rockville, Maryland, this 31st day of March 2000.

For the Nuclear Regulatory Commission.

Annette L. Vietti-Cook,

Secretary of the Commission.

[FR Doc. 00–8431 Filed 4–5–00; 8:45 am]

BILLING CODE 7590–01–P

DEPARTMENT OF TRANSPORTATION

Federal Aviation Administration

14 CFR Part 39

[Docket No. 98–SW–74–AD]

Airworthiness Directives; Eurocopter Deutschland GmbH Model EC 135 Helicopters

AGENCY: Federal Aviation Administration, DOT.

ACTION: Notice of proposed rulemaking (NPRM).

SUMMARY: This document proposes the supersedure of an existing airworthiness directive (AD), applicable to Eurocopter Deutschland GmbH (ECD) Model EC–135 helicopters. The existing AD requires conducting a tail rotor drive shaft vibration survey (survey), installing a Fenestron Shaft Retrofit Kit, inspecting each tail rotor drive shaft bearing (bearing) attaching lock plate for bent-open tabs and broken or missing slippage marks, and visually inspecting each bearing support for cracks. This action would require conducting the survey and installing the Fenestron Shaft Retrofit Kit. This AD would also require installing double bearing supports and struts, revising the required compliance time for the repetitive inspections of the bearing attach hardware and supports, and removing the requirement to contact the FAA if a lock plate tab is bent open or if slippage marks are broken or missing. This proposal is prompted by continued reports of misaligned or cracked bearing supports and loose bearing attachment bolts. The actions specified by the proposed AD are intended to prevent loss of drive to the tail rotor and subsequent loss of control of the helicopter.

DATES: Comments must be received on or before June 5, 2000.

ADDRESSES: Submit comments in triplicate to the Federal Aviation Administration (FAA), Office of the Regional Counsel, Southwest Region, Attention: Rules Docket No. 98–SW–74–AD, 2601 Meacham Blvd., Room 663, Fort Worth, Texas 76137. Comments may be inspected at this location between 9 am and 3 pm, Monday through Friday, except Federal holidays.

The service information referenced in the proposed rule may be obtained from American Eurocopter Corporation, 2701 Forum Drive, Grand Prairie, Texas 75053–4005, telephone (972) 641–3460, fax (972) 641–3527. This information may be examined at the FAA, Office of the Regional Counsel, Southwest Region, 2601 Meacham Blvd., Room 663, Fort Worth, Texas.

FOR FURTHER INFORMATION CONTACT: Shep Blackman, Aviation Safety Engineer, FAA, Rotorcraft Directorate, Rotorcraft Standards Staff, Fort Worth,

Texas 76137, telephone (817) 222–5296, fax (817) 222–5961.

SUPPLEMENTARY INFORMATION:

Comments Invited

Interested persons are invited to participate in the making of the proposed rule by submitting such written data, views, or arguments as they may desire. Communications should identify the Rules Docket number and be submitted in triplicate to the address specified above. All communications received on or before the closing date for comments, specified above, will be considered before taking action on the proposed rule. The proposals contained in this notice may be changed in light of the comments received.

Comments are specifically invited on the overall regulatory, economic, environmental, and energy aspects of the proposed rule. All comments submitted will be available, both before and after the closing date for comments, in the Rules Docket for examination by interested persons. A report summarizing each FAA-public contact concerned with the substance of this proposal will be filed in the Rules Docket.

Commenters wishing the FAA to acknowledge receipt of their comments submitted in response to this notice must submit a self-addressed, stamped postcard on which the following statement is made: ''Comments to Docket No. 98–SW–74–AD.'' The postcard will be date stamped and returned to the commenter.

Availability of NPRMs

Any person may obtain a copy of this NPRM by submitting a request to the FAA, Office of the Regional Counsel, Southwest Region, Attention: Rules Docket No. 98–SW–74–AD, 2601 Meacham Blvd., Room 663, Fort Worth, Texas 76137.

Discussion

On October 27, 1998, the FAA issued AD 98–15–25, Amendment 39–10866 (63 FR 59206, November 3, 1998), requiring the following:

- Before further flight, conduct a survey and install a Fenestron Shaft Retrofit Kit L 535M3002 882.
- Before further flight and thereafter at intervals not to exceed 15 hours time-in-service (TIS), inspect the bearing attaching lock plate for bent-open tabs and broken or missing slippage marks. If found, the FAA must be notified.
- Before further flight and thereafter at intervals not to exceed 3 hours TIS, using a 6-power or higher magnifying glass and a bright light, visually inspect the bearing supports for cracks.

That action was prompted by reports of loose bearings and attachment bolts. The actions of that AD were intended to prevent loss of drive to the tail rotor and subsequent loss of control of the helicopter.

Since the issuance of AD 98–15–25, additional reports of misaligned, cracked, or corroded bearing supports, and loose bearing attachment bolts have been received. The original bearing supports have been redesigned to enable more precise alignment with the tail rotor driveshaft and have been strengthened to prevent cracking. In addition, they are now fabricated of corrosion-resistant material. Struts have been added to the tail boom to improve airframe vibration characteristics and further minimize bearing support cracking.

The Luftfahrt-Bundesamt (LBA), the airworthiness authority for the Federal Republic of Germany, notified the FAA that an unsafe condition may exist on ECD Model EC 135 helicopters. The LBA advises that misaligned, corroded, or cracked bearing supports and loose bearing attachment bolts may lead to a tail rotor failure and subsequent loss of the helicopter.

Since those cited in AD 98–15–25, ECD has issued the following Alert Service Bulletins (ASB's):

- EC 135–53A–004, dated August 14, 1998, to specify replacing the current single bearing supports with double bearing supports made of corrosion-resistant material and to provide instructions for aligning these double bearing supports with the drive shaft axis for improved tail rotor drive shaft support.
- EC 135–53A–005, Revision 3, dated September 2, 1998, to extend the time interval for compliance with the repetitive bearing attach hardware inspection and to identify the required tail rotor driveshaft vibration measurement procedure.
- EC 135–53A–002, Revision 2, dated September 2, 1998, to extend the time interval for compliance with the repetitive bearing support crack inspection contingent on accomplishing Alert Service Bulletin EC 135–53A–004.

The LBA classified these ASB's as mandatory and issued AD's 1998–033/7 and 1998–389, both dated September 14, 1998, to ensure the continued airworthiness of these helicopters in the Federal Republic of Germany.

This helicopter model is manufactured in the Federal Republic of Germany and is type certificated for operation in the United States under the provisions of section 21.29 of the Federal Aviation Regulations (14 CFR 21.29) and the applicable bilateral airworthiness agreement. Pursuant to this bilateral airworthiness agreement, the LBA has kept the FAA informed of the situation described above. The FAA has examined the findings of the LBA, reviewed all available information, and determined that AD action is necessary for products of this type design that are certificated for operation in the United States.

Since an unsafe condition has been identified that is likely to exist or develop on other ECD Model EC 135 helicopters of the same type design, the proposed AD would supersede AD 98–15–25. The proposed AD would require the following:

- Conducting a vibration survey and installing the Fenestron Shaft Retrofit Kit L535M3002 882;
- Installing double bearing supports and struts;
- Replacing bearing attach hardware if necessary; and
- Increasing the repetitive inspection interval for the bearing supports and attach hardware to 50 hours TIS.

The FAA estimates that 16 helicopters of U.S. registry would be affected by this proposed AD. The 50-hour inspection would take approximately 2 work hours to complete. The average labor rate is $60 per work hour. ECD has stated in its ASB's that the baseline vibration measurements and initial installation of all new parts are provided at no charge to the owner/operator. Assuming the helicopters are operated 900 hours TIS per year, the total cost impact of the proposed AD on U.S. operators is estimated to be $34,560.

The regulations proposed herein would not have a substantial direct effect on the States, on the relationship between the national Government and the States, or on the distribution of power and responsibilities among the various levels of government. Therefore, it is determined that this proposal would not have federalism implications under Executive Order 13132.

For the reasons discussed above, I certify that this proposed regulation (1) is not a ''significant regulatory action'' under Executive Order 12866; (2) is not a ''significant rule'' under the DOT Regulatory Policies and Procedures (44 FR 11034, February 26, 1979); and (3) if promulgated, will not have a significant economic impact, positive or negative, on a substantial number of small entities under the criteria of the Regulatory Flexibility Act. A copy of the draft regulatory evaluation prepared for this action is contained in the Rules Docket. A copy of it may be obtained by contacting the Rules Docket at the

location provided under the caption **ADDRESSES**.

List of Subjects in 14 CFR Part 39

Air transportation, Aircraft, Aviation safety, Safety.

The Proposed Amendment

Accordingly, pursuant to the authority delegated to me by the Administrator, the Federal Aviation Administration proposes to amend part 39 of the Federal Aviation Regulations (14 CFR part 39) as follows:

PART 39—AIRWORTHINESS DIRECTIVES

1. The authority citation for part 39 continues to read as follows:

Authority: 49 U.S.C. 106(g), 40113, 44701.

§ 39.13 [Amended]

2. Section 39.13 is amended by removing Amendment 39–10866; AD 98–15–25, Docket No. 98–SW–35–AD, and by adding a new airworthiness directive (AD), to read as follows:

Eurocopter Deutschland GmbH: Docket No. 98–SW–74–AD. Supersedes AD 98–15–25, Amendment 39–10866, Docket No. 98–SW–35–AD.

Applicability: Model EC 135 helicopters, certificated in any category.

Note 1: This AD applies to each helicopter identified in the preceding applicability provision, regardless of whether it has been otherwise modified, altered, or repaired in the area subject to the requirements of this AD. For helicopters that have been modified, altered, or repaired so that the performance of the requirements of this AD is affected, the owner/operator must request approval for an alternative method of compliance in accordance with paragraph (d) of this AD. The request should include an assessment of the effect of the modification, alteration, or repair on the unsafe condition addressed by this AD; and, if the unsafe condition has not been eliminated, the request should include specific proposed actions to address it.

Compliance: Required as indicated, unless accomplished previously.

To prevent loss of drive to the tail rotor and subsequent loss of control of the helicopter, accomplish the following:

(a) Before further flight, conduct a tail rotor drive shaft vibration survey and install a Fenestron Shaft Retrofit Kit L535M3002 882 in accordance with Eurocopter Deutschland GmbH Alert Service Bulletin (ASB) EC 135–53A–005, Revision 3, dated September 2, 1998.

(b) Before further flight, install double bearing supports for the tail rotor driveshaft and tail boom struts in accordance with ASB EC 135–53A–004, dated August 14, 1998.

Note 2: ASB EC 135–53A–002, Revision 2, dated September 2, 1998, pertains to the subject of this AD.

BILLING CODE 4910–13–U

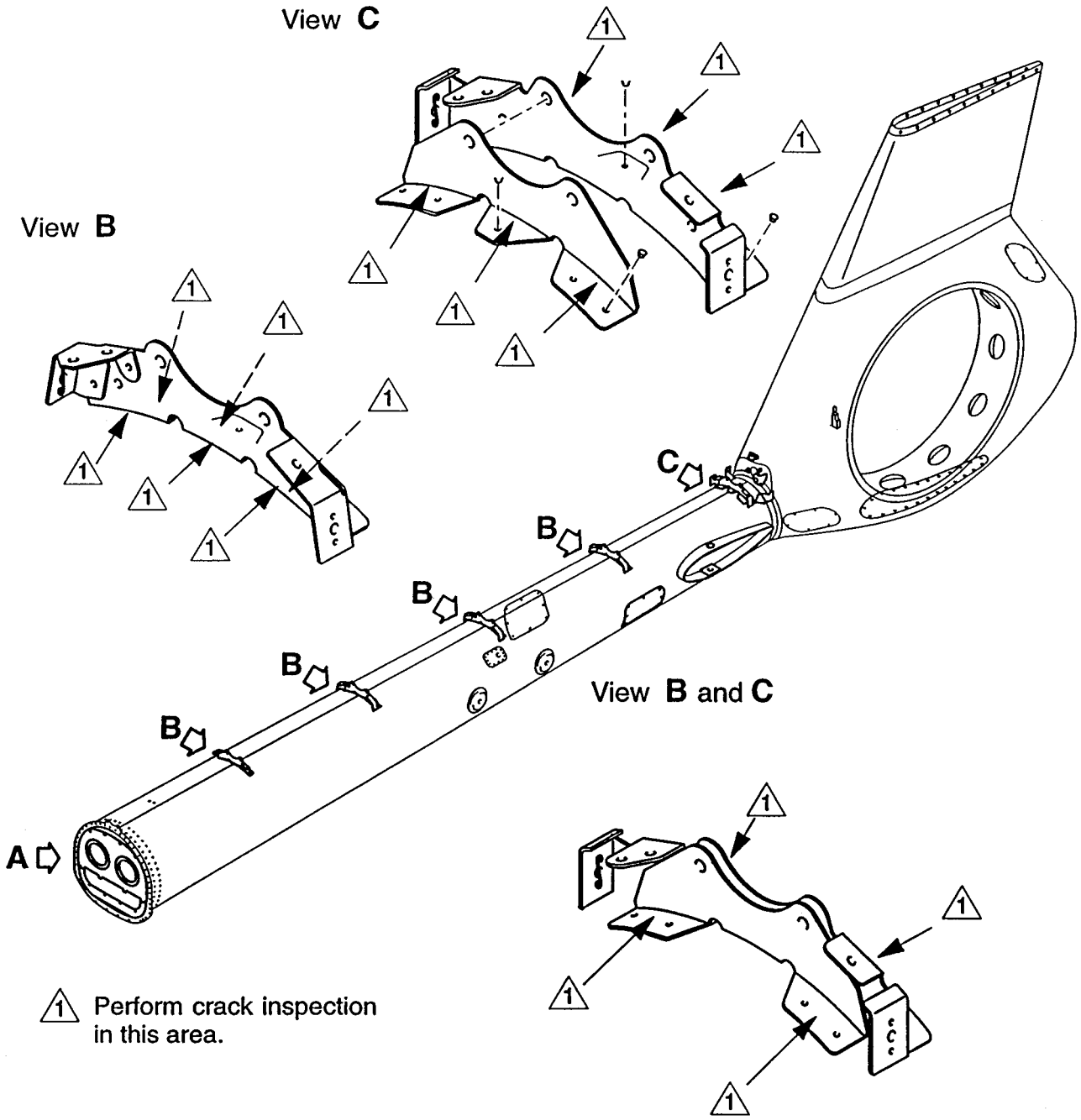

Figure 1

BILLING CODE 4910–13–C

(c) Before further flight and thereafter at intervals not to exceed 50 hours time-in-service, perform the following:

(1) Clean each tail rotor drive shaft bearing support. Using a 6-power or higher magnifying glass and a bright light, visually inspect the attach lugs of the bearing supports B and C (shown in Figure 1) for cracks, particularly in the area extending from the bend radius to the attaching screws and rivets connecting the bearing supports to the tail boom. Before further flight, replace each cracked bearing support with an airworthy bearing support.

(2) Inspect each bearing attach hardware lock plate for bent-open tabs and slippage marks for attach hardware looseness or rotation. Before further flight, replace any loose bearing attach hardware (including lock plates found bent or open due to bolt rotation) with airworthy hardware.

(d) An alternative method of compliance or adjustment of the compliance time that provides an acceptable level of safety may be used if approved by the Manager, Regulations Group, Rotorcraft Directorate, FAA. Operators shall submit their requests through an FAA Principal Maintenance Inspector, who may concur or comment and then send it to the Manager, Regulations Group.

Note 3: Information concerning the existence of approved alternative methods of compliance with this AD, if any, may be obtained from the Regulations Group.

(e) Special flight permits may be issued in accordance with sections 21.197 and 21.199 of the Federal Aviation Regulations (14 CFR 21.197 and 21.199) to operate the helicopter to a location where the requirements of this AD can be accomplished.

Note 4: The subject of this AD is addressed in Luftfahrt-Bundesamt (Federal Republic of Germany) AD's 1998–033/7 and 1998–389, both dated September 14, 1998.

Issued in Fort Worth, Texas, on March 29, 2000.

Henry A. Armstrong,

Manager, Rotorcraft Directorate, Aircraft Certification Service.

[FR Doc. 00–8520 Filed 4–5–00; 8:45 am]

BILLING CODE 4910–13–U

ENVIRONMENTAL PROTECTION AGENCY

40 CFR Part 52

[TX–107–2–7424b; FRL–6567–6]

Approval and Promulgation of Implementation Plans; Texas; Control of Air Pollution From Volatile Organic Compounds, Vent Gas Control and Offset Lithographic Printing Rules

AGENCY: Environmental Protection Agency (EPA).

ACTION: Proposed rule.

SUMMARY: The EPA is taking action on revisions to the Texas State Implementation Plan (SIP). This document covers three separate actions: Approving the Revisions to the 30 TAC, Chapter 115, Control of Air Pollution from Volatile Organic Compounds (VOC), Subchapter B, Division 2, Vent Gas Control (bakery oven emissions) rule as meeting our Reasonably Available Control Technology (RACT) requirements for controlling the VOC emission from such major sources in the Dallas/For Worth (D/FW) ozone nonattainment area; converting EPA's limited approval of certain sections in 30 TAC, Chapter 115, Control of Air Pollution from VOC, Subchapter B, Division 2, Vent Gas Control (bakery oven emissions) rule to a full approval as meeting the RACT requirements for controlling the VOC emission from such major sources in the D/FW ozone nonattainment area. By this approval action, we are saying that Texas will be implementing the RACT for VOC emissions resulting from operation of the bakeries in the D/FW area; and approving that the revisions to the 30 TAC, Chapter 115, Control of Air Pollution from Volatile Organic Compounds (VOC), Subchapter E, Division 4, Offset Lithography Printing as meeting our RACT requirements for controlling the VOC emission from such major sources in the D/FW ozone nonattainment area. By this approval action, we are saying that Texas will be implementing the RACT for VOC emissions resulting from operation of the offset lithography printing sources in the D/FW area.

The EPA is approving these revisions to regulate emissions of VOCs as meeting RACT in accordance with the requirements of the Federal Clean Air Act.

In the ''Rules and Regulations'' section of this **Federal Register**, EPA is approving the State's SIP revision as a direct final rule without prior proposal because the EPA views this as a noncontroversial revision and anticipates no adverse comment. The EPA has explained its reasons for this approval in the preamble to the direct final rule. If EPA receives no relevant adverse comments, the EPA will not take further action on this proposed rule. If EPA receives relevant adverse comment, EPA will withdraw the direct final rule and it will not take effect. The EPA will address all public comments in a subsequent final rule based on this proposed rule. The EPA will not institute a second comment period on this action. Any parties interested in commenting must do so at this time.

DATES: Written comments must be received by May 8, 2000.

ADDRESSES: Written comments should be addressed to Mr. Thomas H. Diggs, Chief, Air Planning Section (6PD–L), at the EPA Region 6 Office listed below. Copies of documents relevant to this action are available for public inspection during normal business hours at the following locations. Anyone wanting to examine these documents should make an appointment with the appropriate office at least two working days in advance.

Environmental Protection Agency, Region 6, Air Planning Section (6PD–L), 1445 Ross Avenue, Dallas, Texas 75202–2733.

Texas Natural Resource Conservation Commission, Office of Air Quality, 12124 Park 35 Circle, Austin, Texas 78753.

FOR FURTHER INFORMATION CONTACT: Mr. Alan Shar, P.E., Air Planning Section (6PD–L), EPA Region 6, 1445 Ross Avenue, Dallas, Texas 75202–2733, telephone (214) 665–6691.

SUPPLEMENTARY INFORMATION: This document concerns Control of Air Pollution from Vent Gas Control (bakery oven emissions) and offset lithographic printing rules in the D/FW ozone nonattainment area. For further information, please see the information provided in the direct final action that is located in the ''Rules and Regulations'' section of this **Federal Register** publication.

Authority: 42 U.S.C. 7401 *et seq.*

Dated: March 21, 2000.

Lynda F. Carroll,

Acting Regional Administrator, Region 6.

[FR Doc. 00–7733 Filed 4–5–00; 8:45 am]

BILLING CODE 6560–50–U

ENVIRONMENTAL PROTECTION AGENCY

40 CFR Part 258

[FRL–6571–3; F–2000–ALPA–FFFFF]

Alternative Liner Performance, Leachate Recirculation, and Bioreactor Landfills: Request for Information and Data

AGENCY: Environmental Protection Agency.

ACTION: Request for information and data.

SUMMARY: EPA is requesting comments and information on two issues related to the Criteria for Municipal Solid Waste Landfills. First, we need data and information on the performance of alternative liner designs compared to the performance of composite liners

when leachate is recirculated. Provisions in the municipal solid waste landfill (MSWLF) criteria prohibit leachate recirculation at an MSWLF unless the unit has a composite liner as described in these regulations. Recently, various stakeholder groups (e.g., States, local governments, solid waste associations, and industry) have suggested that there are alternative liner designs that would work as well as, if not better than, the specific liner designs currently required by the criteria.

Second, EPA is also requesting data and information on the design and performance of bioreactor landfills. In recent years, bioreactor landfills have gained recognition as a possible innovation in solid waste management. The bioreactor landfill is generally defined as a landfill operated to transform and more quickly stabilize the readily and moderately decomposable organic constituents of the waste stream by purposeful control to enhance microbiological processes. Bioreactor landfills often employ liquid addition including leachate recirculation, alternative cover designs, and state-of-the-art landfill gas collection systems.

DATES: EPA must receive your responses on leachate recirculation and alternative liner performance by August 7, 2000. EPA must receive your responses on bioreactors by October 6, 2000.

ADDRESSES: See section I of **SUPPLEMENTARY INFORMATION** below.

FOR FURTHER INFORMATION CONTACT:

For general information: Contact the RCRA Hotline at 800 424–9346 or TDD 800 553–7672 (hearing impaired). In the Washington, DC, metropolitan area, call 703 412–9810 or TDD 703 412–3323.

For information on specific aspects of this document: Contact Dwight Hlustick, Municipal and Industrial Solid Waste Division of the Office of Solid Waste (mail code 5306W), U.S. Environmental Protection Agency Headquarters (EPA, HQ) 1200 Pennsylvania Ave., NW, Washington, DC 20460; 703/308–8647 [HLUSTICK.DWIGHT@EPAMAIL.EPA.GOV].

SUPPLEMENTARY INFORMATION:

I. Submitting Responses to This Document
How May I Respond to This Document?
What Information Should I Include in My Response?
What Will EPA Do With the Information You Submit?
II. What Will Be the Official Record for This Document?
How May I See Responses to This Document?
Where May I Find Information on This Action on the Internet?
III. What Is the Authority for This Request?
IV. Description of EPA's Current Municipal Solid Waste Landfill Regulations
V. Description of Current Regulations for Landfill Liners
Performance Standard
Design Standard
VI. What Are Existing Requirements for Leachate Recirculation?
Description of Technical Guidance for Landfill Design
Description of Concerns With Respect to Leachate Recirculation
VII. What Information Would EPA Like to Have About Alternative Liner Performance and Leachate Recirculation?
VIII. Concerns With Respect to Bioreactors
Information Needs With Respect to Bioreactors
IX. Conclusion

I. Submitting Responses on This Document

How May I Respond to This Document?

You may submit your information in hard copy (paper) or using electronic mail. All comments must reference docket number F–2000-ALPA-FFFFF. You should not submit electronically any confidential business information.

- Mail: Please submit an original and two copies to: RCRA Docket Information Center, Office of Solid Waste (5305G), U.S. Environmental Protection Agency Headquarters (EPA, HQ) 1200 Pennsylvania Ave., NW, Washington DC 20460.
- *Hand Deliveries:* Please submit an original and two copies of information to: RCRA Information Center (RIC), Crystal Gateway I, First Floor, 1235 Jefferson Davis Highway, Arlington, Virginia.
- *Electronic Submittals:* Please submit electronic information through the Internet to: rcra-docket@epa.gov. Your responses in electronic format must also be indentified by docket number F–2000–ALPA–FFFFF. You must provide your electronic submittals as ASCII files and avoid the use of special characters and any form of encryption. You should not submit electronically any confidential business information (CBI). An original and two copies of CBI must be submitted under separate cover to: RCRA CBI Document Control Officer, Office of Solid Waste (5305W), U.S. EPA, 1200 Pennsylvania NW, Washington, DC 20460.

What Information Should I Include in My Response?

Your comments will be most effective if you follow the suggestions below:

- Explain your views as clearly as possible.
- Provide solid technical data to support your views.
- If you estimate potential costs, explain how you arrived at the estimate.
- Provide specific examples to illustrate your concerns.
- Offer specific alternatives.
- Refer your comments to specific sections of this notice or MSWLF criteria.
- Be sure to submit your information by the deadline in this notice.
- Be sure to include the name, date, and docket number with your submittals.

What Will EPA Do With the Information You Submit?

We will review all responses to this action as well as additional information in our own data base in considering whether to propose to revise the Criteria for Municipal Solid Waste Landfills (40 CFR part 258). EPA will not respond directly on an individual basis to those providing information to the Agency as a result of this action, but will address issues raised by the respondents in future **Federal Register** notices. In addition, all responses to this information request notice will be incorporated into the docket for any rulemaking proposals on the subject criteria.

II. What Will Be the Official Record for This Document?

The official record for this action will be kept in paper form. Accordingly, EPA will transfer all electronic submittals into paper form and place them in the official record, which will also include all responses submitted directly in writing. The official record is the paper record maintained at the RCRA Information Center (RIC), Crystal Gateway I, First Floor, 1235 Jefferson Davis Highway, Arlington, Virginia.

How May I See Responses to This Document?

All responses to this document are available for viewing in the RCRA Information Center (RIC), located at Crystal Gateway I, First Floor, 1235 Jefferson Davis Highway, Arlington, VA. The RIC is open from 9 a.m. to 4 p.m., Monday through Friday, excluding federal holidays. To review docket materials, we recommend that the public make an appointment by calling 703 603–9230. The public may copy a maximum of 100 pages from any regulatory docket at no charge. Additional copies cost $0.15/page.

Where May I Find Information on This Action on the Internet?

Information on this action, consisting of this notice and a fact sheet, may be found at the following Internet site: http://www.epa.gov/epaoswer/non-hw/muncpl/landfill/leachate.htm.

III. What Is the Authority for This Request?

Any revisions to Criteria for Municipal Solid Waste Landfills (40 CFR part 258) will be made under Sections 1008, 2002 (general rule making authority), 4004, and 4010 of the Resource Conservation and Recovery Act of 1976, as amended. Revisions may also be made under Section 405 of the Clean Water Act which addresses the disposal of sewage sludge.

IV. Description of EPA's Current Municipal Solid Waste Landfill Regulations

As specified in the Resource Conservation and Recovery Act, the federal role is to establish overall regulatory direction through the provision of minimum nationwide standards for MSWLFs. On October 9, 1991, EPA issued revised Criteria for Municipal Solid Waste Landfills (40 CFR part 258; 56 FR 50978). These criteria establish minimum national performance standards necessary to ensure that ''no reasonable probability of adverse effects on health or the environment'' will result from solid waste disposal facilities. MSWLFs typically receive household waste, non-hazardous commercial, institutional and industrial waste, household hazardous waste and conditionally exempt small quantity generator (CESQG) hazardous waste. The criteria are implemented in one of two ways. The first, and preferred alternative, is that each State would implement the criteria after receiving approval by EPA of its municipal solid waste landfill permit program or other system of prior approval. The criteria contain provisions that allow States to develop and rely on alternative approaches that deal with site-specific conditions. Therefore, the actual planning and direct implementation of solid waste programs is principally a function of State governments and those owners and operators, including local governments, of MSWLFs, not the federal government.

The second alternative is that the program would be self-implementing by landfill owners and operators in those States that have not received EPA approval of their MSWLF permitting programs. In this case, the regulations provide less flexibility than for approved States. As of March 1, 2000, 49 states and territories had received approval of their programs and are implementing these regulations.

V. Description of Current Regulations for Landfill Liners

The criteria set forth two methods for complying with liner requirements for municipal solid waste landfills. The first is a performance standard and the second is a specific design standard.

Performance Standard

The performance standard is set forth in § 258.40(a)(1). Under this standard, a landfill owner or operator may rely on the design of their choice, provided the design ensures that the concentration values for the constituents listed in the following table will not be exceeded in the uppermost aquifer at the relevant point of compliance as determined by the Director of an approved State.

TABLE 1.—CONCENTRATION VALUES NOT TO BE EXCEEDED AT THE POINT OF COMPLIANCE

Chemical	MCL (mg/l)
Arsenic	0.05
Barium	1.0
Benzene	0.005
Cadmium	0.01
Carbon tetrachloride	0.005
Chromium (hexavalent)	0.05
2,4-Dichlorophenoxy acetic acid	0.1
1,4-Dichlorobenzene	0.075
1,2-Dichloroethane	0.005
1,2-Dichloroethylene	0.007
Endrin	0.0002
Fluoride	4
Lindane	0.004
Lead	0.05
Mercury	0.002
Methoxychlor	0.1
Nitrate	10
Selenium	0.01
Silver	0.05
Toxaphene	0.005
1,1,1-Trichoromethane	0.2
Trichloroethylene	0.005
2,4,5-Trichlorophenoxy acetic acid	0.01
Vinyl Chloride	0.002

The point of compliance can be no more than 150 meters from the waste management unit boundary and must be on land owned by the owner of the MSWLF (see 40 CFR 258.40(d)). The criteria require that in determining whether the performance standard is met, the Director of the approved State program shall consider the following factors in his/her determination:

1. The hydrogeologic characteristics of the facility and the surrounding land;
2. The volume and the physical and chemical characteristics of the leachate;
3. The quantity, quality, and direction of flow of ground water;
4. The proximity of and withdrawal rate of the groundwater users;
5. The availability of alternative drinking water supplies;
6. The existing quality of the ground water, including other sources of contamination and their cumulative impacts on the ground water, and whether the ground water is currently used or reasonably expected to be used for drinking water;
7. Public health, safety, and welfare effects; and
8. Practical capability of the owner or operator.

Design Standard

The second method for compliance with the criteria is to install a liner system that meets the specific design criteria described in 40 CFR 258.40(a)(2) and set forth in 40 CFR 258.40(b). Section 258.40(a)(2) states that the liner system must contain a composite liner and Section 258.40(b) defines a composite liner as a system comprised of two components:

1. An upper component consisting of a minimum of 30 mil flexible membrane liner (60 mil if high density polyethylene (HDPE) is used); and
2. a lower component consisting of compacted soil at least two feet deep with a hydraulic conductivity of no more than $1x\ 10^{-7}$ cm/sec.

We based this decision on a desire to ensure that leachate reaching the liner would be efficiently collected (56 *FR* 51056). The design standards require that the leachate collection system be capable of maintaining a hydraulic head within the landfill of 30 cm or less.

VI. What Are the Existing Requirements for Leachate Recirculation?

The liquid restrictions in Subpart C of Part 258 only allow leachate recirculation in MSWLFs that are constructed with a composite liner and leachate recirculation system as described in 40 CFR 258.28(a)(2). The recirculation of leachate is not allowed in landfills which have an alternative liner design even if the design meets the performance standard in 40 CFR 258.40(a)(1). At the time these regulations were promulgated, we believed MSWLFs needed a composite liner and leachate control system as described at 40 CFR 258.40(a)(2) to ensure that ground water would be protected.

Description of Technical Guidance for Landfill Design

EPA published a technical manual entitled ''Solid Waste Disposal Criteria'' (EPA530–R–93–017, NTIS PB94–100–450, Internet site: http://www.epa.gov/epaoswer/non-hw/muncpl/landfill/techman/) in 1993. Chapter 4 of this manual entitled ''Design Criteria'' sets forth additional guidance in the

following areas: (1) Design concepts, (2) design calculations, (3) physical properties, and (4) construction methods. This chapter of the guidance document also addresses the following:

Designs Based on the Performance Standard

- Leachate characterization and leakage assessment;
- Leachate migration in the subsurface;
- Leachate migration models;
- Relevant point of compliance assessment.

Description of Concerns With Respect to Leachate Recirculation

Many MSWLF stakeholders (*e.g.,* States, local governments, solid waste associations, and industry) believe that under certain conditions, leachate recirculation should be allowed when alternative liners are used. In fact, some believe that alternative liner technologies can be superior to the composite liner design specified in the criteria. We are trying to determine if it is possible to design and operate MSWLFs safely when alternative liner designs are used and leachate is recirculated. As required by the regulations, such an alternative liner design must assure that the performance standard specified at 40 CFR 258.40(a)(1) and the requirement to maintain a hydraulic head within the landfill of 30 cm. or less are met.

VII. What Information Would EPA Like to Have About Alternative Liner Performance and Leachate Recirculation?

We are interested in determining whether and which types of alternative liners are capable of meeting the design performance standard described above including maintaining a hydraulic head at acceptable levels.

More specifically we are seeking data and information on the following issues and questions:

- Should EPA revise the MSWLF regulations to allow leachate recirculation when alternative liners are used, and under what conditions should leachate recirculation be allowed?
- Should only specified alternative liner designs be allowed if leachate is recirculated?
- When alternative liners are used, what would be the impact of leachate recirculation on leachate quality and quantity and attainment of the concentration values specified in Table 1 in ground water at the point of compliance?
- Does EPA need to specify other requirements in the MSWLF Criteria to ensure that landfills that recirculate leachate when using alternative liners protect ground water and maintain the hydraulic head with the landfill at 30 cm. or less?
- To what degree does leachate recirculation accelerate the stability of the leachate and the remaining decomposable solids in a landfill? How can EPA make a determination when a landfill is sufficiently stabilized?
- Should EPA revise the technical manual? If so, how? We are particularly interested in information on how to advise owners and operators to characterize leachate and leachate leakage rates properly when conducting leakage migration modeling to demonstrate that a landfill which recirculates leachate meets the performance standard specified in 40 CFR 258.40(a)(1). For example, should we be suggesting different methodologies to quantify input parameters? Are there non-steady state situations that we should be addressing in the guidance? What are the effects of leachate recirculation on heavy metals in the leachate, and subsequently in the ground water? Should the groundwater models identified in this guidance be updated? If so, what models are appropriate?

VIII. Concerns With Respect to Bioreactors

Recent communications from MSWLF stakeholders indicate that there is a growing interest in bioreactor landfills. Bioreactor landfills represent a potential new approach to solid waste management. A bioreactor landfill can be generally defined as a sanitary landfill operated to transform and stabilize the readily and moderately decomposable organic constituents of the waste stream by purposeful control to enhance microbiological processes. While categorizations of bioreactor landfills vary, operational parameters often employ leachate recirculation, alternative cover designs, liquids addition to optimize moisture content in the waste, and state-of-the-art landfill gas collection systems. Bioreactor landfills have been operated under both anaerobic and aerobic conditions. Thus, the term bioreactor landfill is a management concept for MSWLFs encompassing a variety of MSWLF practices.

Information Needs With Respect to Bioreactors

At this time, EPA lacks adequate data and information on the design, operation, and performance of bioreactor landfills to evaluate this technology. We are unsure about the appropriateness of revising the MSWLF Criteria, as some stakeholders have suggested to the Agency, to allow for design and operation of bioreactor landfills (e.g., allowing the addition of additional liquids to municipal landfills to optimize waste degradation). Therefore, we are today seeking data and other information on the design, operation, and performance of bioreactor landfills. We are specifically requesting comment and data in the following areas.

- The nature and scope of current bioreactor landfill projects both within the U.S. and abroad.
- The impact (advantages and disadvantages) of leachate recirculation and liquids addition (with or without the addition of air) on leachate quality, waste settlement, waste slope and stability, and landfill gas yield.
- Modifications that have been made to daily cover to optimize biodegradation.
- Changes to final cover that have been made to optimize biodegradation or to incorporate materials which convert landfill gas to carbon dioxide and water. See, for example ''Approaching Sustainable Landfilling,'' Alexander Zach, et al.; and ''Biological Pretreatment of MSW as a Measure to Save Landfill Volume and Deter Birds,'' Florian Koelsch and Richard T. Reynolds, Proceedings of Fifteenth International Conference on Solid Waste Technology and Management, December 12–15, 1999, Philadelphia, PA. Proceedings published by Widener University School of Engineering and the University of Pennsylvania.
- Additional monitoring requirements necessary to ensure that a bioreactor (with or without air addition) is functioning properly over the life of the landfill.
- Approaches that have been taken to close bioreactor landfills and to care for the landfill during the post-closure care period to ensure protection of human health and the environment.
- The potential public health, environmental, and economic impacts of adding liquid wastes, such as sewage sludge, grey water or animal feedlot liquid wastes to the MSWLF.
- For bioreactors which have been operating in the aerobic mode, what methods have been used to provide for aeration and how to control temperature in the waste mass.
- The appropriateness of liner designs different from the specific design described in 40 CFR 258.40(a)(2) when liquids are added to a MSWLF to enhance biodegradation.
- Project economics for the design, construction, and operation of

bioreactor landfills (with or without air addition).

- The Clean Air Act Section 111(d) and greenhouse gas emissions impact of operating a municipal solid waste landfill as a bioreactor landfill, i.e., will the addition of air or liquids affect the ability of a landfill to comply with air regulations?
- The comparative cost effectiveness and environmental benefits of the bioreactor landfill relative to managing segregated organic wastes through composting and placing non-compostable waste in a standard municipal landfill (i.e., one not operated as a bioreactor).
- Are there management and safety issues associated with landfill gas generation and control at bioreactor landfills that need to be addressed in regulations or guidance?
- Are there relevant patent issues associated with anaerobic, aerobic, or other bioreactor landfills of which EPA should be aware?

IX. Conclusion

After reviewing the literature on leachate recirculation, alternative liner designs, and bioreactor landfills and information and data received during this comment period, the Agency will make a determination concerning what future actions, if any, we will take on the issues discussed in this document.

Dated: March 22, 2000.

Elizabeth Cotsworth,

Director, Office of Solid Waste.

[FR Doc. 00–8400 Filed 4–5–00; 8:45 am]

BILLING CODE 6560–50–P

ENVIRONMENTAL PROTECTION AGENCY

40 CFR Part 761

[OPPTS–66009G; FRL–6553–6]

RIN 2070–AD27

Use Authorization for, and Distribution in Commerce of, Non-liquid Polychlorinated Biphenyls, Notice of Availability; Partial Reopening of Comment Period; Extension of Comment Period

AGENCY: Environmental Protection Agency (EPA).

ACTION: Proposed rule; extension of comment period.

SUMMARY: EPA is extending the comment period for the proposed rule which published in the **Federal Register** of December 10, 1999. That action solicited additional information on the use and concentration of polychlorinated biphenyls (PCBs) found in certain non-liquid PCB (NLPCB) applications. It also announced the availability, for comment, of data that were submitted to EPA after the comment period closed for the December 6, 1994 proposal. In addition to authorizing certain NLPCB uses, the proposed provision (§ 761.30(q)) would have required compliance with several conditions (e.g., notification, marking, air monitoring and standard wipe tests, remediation, repair and/or removal, reporting and recordkeeping requirements). EPA is extending the 120–day data submission period, as well as the 90–day comment period on existing and new data submissions. In response to a request for more time to develop the requested data, EPA is extending the comment periods to obtain data that may support an authorization which would require few, if any, conditions but is protective of health and the environment.

DATES: Data submissions, identified by docket control number OPPTS–66009G, must be received on or before October 10, 2000. Comments on any of the data submissions and/or relevant docket materials, identified by docket control number OPPTS–66009G, must be received on or before January 10, 2001.

ADDRESSES: Submit data and comments by mail, electronically, or in person. Please follow the detailed instructions for each method as provided in Unit III. of the ''SUPPLEMENTARY INFORMATION.'' To ensure proper receipt by EPA, it is imperative that you identify docket control number OPPTS–66009G in the subject line on the first page of your response.

FOR FURTHER INFORMATION CONTACT: *For general information contact:* Barbara Cunningham, Director, Office of Program Management and Evaluation, (7401), Office of Pollution Prevention and Toxics, Environmental Protection Agency, Ariel Rios Bldg., 1200 Pennsylvania Ave., NW., Washington, DC 20460; telephone numbers: (202) 554–1404; e-mail address: TSCA-Hotline@epa.gov.

For technical information contact: Peggy Reynolds, Office of Pollution Prevention and Toxics, National Program Chemicals Division, (7404), Environmental Protection Agency, Ariel Rios Bldg., 1200 Pennsylvania Ave., NW., Washington, DC 20460; telephone number: (202) 260–3965; e-mail address: reynolds.peggy@epa.gov.

SUPPLEMENTARY INFORMATION:

I. Does this Action Apply to Me?

You may be affected by this supplemental action if you own, use, process, or distribute PCBs in commerce. Affected categories and entities include:

Categories	NAICS Codes	Examples of Potentially Affected Entities
Industry	31-33, 211, 5133	Electroindustry manufacturers, oil and gas extraction, end-users of electricity, telecommunications and general contractors
Utilities and rural electric cooperatives	2211	Electric power and light companies
Individuals, Federal, State Municipal Governments, hospitals and colleges	921, 622, 6113	Individuals and agencies which own, use, process and distribute PCBs in commerce

This listing is not intended to be exhaustive, but rather provides a guide for readers regarding entities likely to be affected by this action. Other types of entities not listed in the table in this unit could also be affected. The North American Industrial Classification System (NAICS) codes have been provided to assist you and others in determining whether or not this action applies to certain entities. To determine whether you or your business is affected

by this action, you should carefully examine the applicability provisions in Title 40 of the Code of Federal Regulations (CFR), part 761. If you have any questions regarding the applicability of this action to a particular entity, consult the technical person listed under ''FOR FURTHER INFORMATION CONTACT.''

II. How Can I Get Additional Information, Including Copies of this Document or Other Related Documents?

1. *Electronically*. You may obtain electronic copies of this document, and certain other related documents that might be available electronically, from the EPA Internet Home Page at http://www.epa.gov/. On the Home Page select ''Laws and Regulations'' and then look up the entry for this document under the ''**Federal Register**—Environmental Documents.'' You can also go directly to the **Federal Register** listings at http://www.epa.gov/fedrgstr/. To access information about the PCB Program, go directly to the PCB Home Page at http://www.epa.gov/pcb.

2. *In person*. The Agency has established an official record for this action under docket control number OPPTS-66009G. The combined record also includes all material and submissions filed under docket control number OPPTS-66009C. The official record consists of the documents specifically referenced in this action, any public comments received during an applicable comment period, and other information related to this action, including any information claimed as confidential business information (CBI). This official record includes the documents that are physically located in the docket, as well as the documents that are referenced in those documents. The public version of the official record does not include any information claimed as CBI. The public version of the official record, which includes printed, paper versions of any electronic comments submitted during an applicable comment period, is available for inspection in the TSCA Nonconfidential Information Center, North East Mall Rm. B–607, Waterside Mall, 401 M St., SW., Washington, DC. The Center is open from noon to 4 p.m., Monday through Friday, excluding legal holidays. The telephone number for the Center is (202) 260–7099.

III. How and to Whom Do I Submit Comments?

As described in Unit III. of the proposed rule published in the **Federal Register** of December 10, 1999 (64 FR 69358) (FRL–6064–7), you may submit your comments through the mail, in person, or electronically. Please follow the instructions that are provided in the proposed rule. Do not submit any information electronically that you consider to be CBI. To ensure proper receipt by EPA, be sure to identify docket control number OPPTS–66009G in the subject line on the first page of your response.

IV. How Should I Handle CBI Information That I Want to Submit to the Agency?

Do not submit any information electronically that you consider to be CBI. You may claim information that you submit to EPA in response to this document as CBI by marking any part or all of that information as CBI. Information so marked will not be disclosed except in accordance with procedures set forth in 40 CFR part 2. In addition to one complete version of the comment that includes any information claimed as CBI, a copy of the comment that does not contain the information claimed as CBI must be submitted for inclusion in the public version of the official record. Information not marked confidential will be included in the public version of the official record without prior notice. If you have any questions about CBI or the procedures for claiming CBI, please consult the technical person identified under **FOR FURTHER INFORMATION CONTACT.**

V. What Should I Consider as I Prepare My Comments for EPA?

In preparing comments and/or developing data for EPA's consideration, you should keep in mind that your NLPCB use is not currently authorized. Under the Toxic Substances Control Act (TSCA) and the existing PCB regulations, the use is prohibited and you would be required to dispose of that material. In addition to completing rulemaking to authorize the NLPCB use(s), EPA is required to make a no unreasonable risk finding for the distribution in commerce of the NLPCB material (i.e., the sale, donation or transfer of the unauthorized NLPCB). Therefore, you should keep in mind that you will not be able to avoid the prohibitions by simply selling, transferring or donating to another entity, equipment and property which contain the unauthorized NLPCB uses, unless the NLPCBs have been removed. You should weigh the costs of the TSCA PCB prohibitions (i.e., disposal and/or the loss of revenue) against the cost of providing useful data and comments to the Agency. For example, if the material is approaching the end of its life cycle, you may decide that it is not worth the effort to take samples of the material and therefore you would prefer to simply dispose of the item(s). In that event, you should remember that the PCB disposal requirements may apply regardless of whether the item is authorized for use and distribution in commerce. Conversely, you may determine that the item still has value and provides reliable service. In that instance, you may want to take advantage of this extension in order to develop the information which is needed to support the authorizations for the use and distribution in commerce of the NLPCB item(s).

In order for the Agency to make the no unreasonable risk finding and to develop a broad, generic use authorization and accompanying distribution in commerce provision, you should consider providing the data described in the December 10, 1999 **Federal Register** document (i.e., matching bulk, surface and air sample results so that EPA can examine the dermal and inhalation risks; matching bulk sample results and surface results so that relationships between bulk and surface concentrations can be better defined; summary statistics to better determine if the results are representative of the sample population; and population characteristics to determine how the results represent the overall population of the items in use; see the discussions at Units VII. and VIII. of the December 10, 1999 document at pages 64 FR 69360–69363).

Finally, you should make sure to submit your comments by the deadline in this document; i.e., October 10, 2000, for data submissions, and January 10, 2001, for comments on the docket materials. To ensure proper receipt by EPA, be sure to identify the docket control number assigned to this action (i.e., OPPTS–66009G) in the subject line on the first page of your response. You may also provide the name, date, and **Federal Register** citation.

VI. What Action is EPA Taking?

EPA is extending the period for public input to allow individuals an additional opportunity to complete sample collection and testing programs, to compile the results of the testing and to submit the results to EPA. EPA intends to use the data in support of an authorization which would require few, if any, conditions but is protective of health and the environment.

VII. What is the Agency's Authority for Taking this Action?

The authority for this action is section 6(e) of the Toxic Substances Control Act, 15 U.S.C. 2605(e).

VIII. Do Any Regulatory Assessment Requirements Apply to this Action?

No. This action is not a rulemaking, it merely extends the date by which public comments on a proposed rule must be submitted to EPA on a proposed rule that previously published in the **Federal Register** of December 6, 1994 (59 FR 62788) and extended by the **Federal Register** of December 10, 1999 (64 FR 69358). For information about the applicability of the regulatory assessment requirements to the proposed rule, please refer to the discussion in Unit VI. of that document (59 FR 62788, December 6, 1994).

List of Subjects

40 CFR Part 761

Environmental protection, Hazardous substances, Polychlorinated biphenyls, Reporting and recordkeeping requirements.

Dated: March 30, 2000.

Susan H. Wayland,

Acting Assistant Administrator for Prevention, Pesticides and Toxic Substances.

[FR Doc. 00–8407 Filed 4–5–00; 8:45 am]

BILLING CODE 6560–50–F

DEPARTMENT OF TRANSPORTATION

Research and Special Programs Administration

49 CFR Part 195

[Docket RSPA–5455]

RIN 2137–AC34

Areas Unusually Sensitive to Environmental Damage

AGENCY: Research and Special Programs Administration (RSPA), DOT.

ACTION: Notice of Public Workshop and Initiation of Technical Review.

SUMMARY: RSPA is concluding a pilot test of a draft definition for areas unusually sensitive to environmental damage from a hazardous liquid pipeline release, commonly referred to as unusually sensitive areas (USAs). The draft USA definition was created through a series of public workshops and technical entities. The pilot was conducted to determine if the draft definition could be used to identify and locate unusually sensitive drinking water and ecological resources using available data from government agencies and environmental organizations. RSPA invites industry, government agencies, and the public to a workshop that will begin a technical review of USA pilot results. The purpose of this workshop is to openly discuss the pilot results and to provide the results to other government agencies, environmental groups, and academia for evaluation.

DATES: The workshop will be held on April 27, 2000, from 9 to 4 and on April 28, 2000, from 9 to 1 pm. Written comments on this initiative must be submitted by June 27, 2000.

ADDRESSES: The workshop will be held at the U.S. DOT, 400 Seventh Street, SW, Room 2230, Washington, DC. Non-federal employee visitors are admitted into the DOT building through the southwest entrance at Seventh and E Streets, SW. Persons who want to participate in the workshop should call (202) 366–4561 or e-mail their name, affiliation, and phone number to christina.sames@rspa.dot.gov. Send written comments in duplicate to the Dockets Facility, U.S. Department of Transportation, Room #PL–401, 400 Seventh Street, SW, Washington, DC 20590–0001. Persons who want confirmation of mailed comments must include a self-addressed stamped postcard. Comments may also be e-mailed to ops.comments@rspa.dot.gov in ASCII or text format. The Dockets Facility is open from 10 am to 5 pm, Monday through Friday, except on Federal holidays when the facility is closed.

FOR FURTHER INFORMATION CONTACT: Christina Sames, (202) 366–4561, or e-mail *christina.sames@rspa.dot.gov*, about this document, or the Dockets Unit, U.S. Department of Transportation, Plaza 401, 400 Seventh Street SW, Washington, DC 20590, for copies of this document or other material in the docket, including material from previous workshops. The public may also review material in the docket by accessing the Docket Management System's home page at http://dms.dot.gov. An electronic copy of any document published in the **Federal Register** may be downloaded from the Government Printing Office Electronic Bulletin Board Service at (202) 512–1661.

SUPPLEMENTARY INFORMATION:

Legislative History

The pipeline safety statute (49 U.S.C. § 60109) requires the Secretary of Transportation to prescribe standards that establish criteria for identifying each hazardous liquid pipeline facility and gathering line located in an area that the Secretary describes as unusually sensitive to environmental damage if there is a hazardous liquid pipeline accident (USAs). When describing USAs, the Secretary is to consider areas where a pipeline rupture would likely cause permanent or long-term environmental damage. These areas are to include:

1. Locations near pipeline rights-of-way that are critical to drinking water, including intake locations for community water systems and critical sole source aquifer protection areas; and

2. Locations near pipeline rights-of-way that have been identified as critical wetlands, riverine or estuarine systems, national parks, wilderness areas, wildlife preservation areas or refuges, wild and scenic rivers, or critical habitat areas for threatened and endangered species.

Public Workshops to Date

RSPA has held five public workshops on USAs. Participants at the workshops have included representatives from the Environmental Protection Agency; the Departments of Interior, Agriculture, Transportation, and Commerce; nongovernment agencies; academia; and the public.

The first workshop was held on June 15 and 16, 1995, and focused on criteria being considered to determine USAs (60 FR 27948; May 26, 1995; Docket PS–140(a)). A second workshop held on October 17, 1995, focused on developing a process that could be used to determine if an area is a USA (60 FR 44824; August 29, 1995; Docket PS–140(b)). The third workshop on January 18, 1996, focused on guiding principles for determining USAs (61 FR 342; January 4, 1996; Docket PS–140(c)). The fourth workshop held April 10–11, 1996 (61 FR 13144; March 26, 1996; Docket PS–140(d)) focused on criteria, components, and parameters of terms that have been used when describing USAs and the scope and objectives of additional USA workshops.

A fifth workshop was held June 18–19, 1996 (61 FR 27323; May 31, 1996; Docket PS–140(e)) and focused on identifying critical drinking water resources and possible filtering criteria that could be used to identify drinking water resources that are unusually sensitive to a hazardous liquid pipeline release. The critical drinking water resources that were identified in that workshop include public water systems, wellhead protection areas, and sole source aquifers. Filtering criteria include the depth and geology of a drinking water resource and if the public water system has an adequate alternative drinking water supply. Transcripts of and information presented at these public workshops are in the Docket.

API Work

In addition to the five public workshops, the American Petroleum Institute (API) held two meetings with technical experts to discuss unusually sensitive ecological resources. The meetings were held on October 23–24, 1996, and June 25–26, 1997. Representatives of RSPA, EPA, the Departments of Interior, Commerce, and Agriculture, and The Nature Conservancy attended these meetings. Attendees discussed possible ecological USA candidates and filtering criteria that could be used to determine which ecological resources are unusually sensitive to damage from a hazardous liquid pipeline release. The significant ecological resources that were identified during the meetings include threatened and endangered species, critically imperiled and imperiled species, depleted marine mammals, and areas containing a large percent of the world's population of a migratory waterbird species. Filtering criteria focused on the extent to which a species is endangered, areas that are critical to multiple sensitive species, and areas where a large percent of a species population could be impacted. Notes from these technical meetings are in the Docket.

Proposed Definition and Pilot Test

RSPA recently proposed a definition for unusually sensitive drinking water end ecological resources in a notice of proposed rulemaking (64 FR 73464; December 30, 1999). The proposed definition was created through a series of public workshops and our collaboration with a wide-range of federal, state, public, and industry stakeholders. The identification of USAs uses a multi-step process that begins by designating and assessing environmentally sensitive areas (ESAs), determining which of these ESAs are potentially more susceptible to permanent or long term damage from a hazardous liquid release (areas of primary concern), and finally identifying filtering criteria to determine which areas of primary concern can be reached by a release and sustain permanent or long-term damage. The areas that result are the proposed USAs. Proposed section 195.6 gives a more detailed definition of USAs.

OPS is concluding a pilot test to determine if the proposed definition can be used to identify and locate unusually sensitive drinking water and ecological resources using available data from government agencies and environmental organizations. Texas, California, and Louisiana were the states chosen to test the proposed USA definition due to the large number of hazardous liquid pipelines and the considerable drinking water and ecological resources that exist in these states. OPS will use the results to evaluate whether the proposed definition identifies the majority of unusually sensitive areas and whether environmental data is accessible and appropriate to support the proposed definition. Once OPS finishes the test, has a peer review and gets comment on the proposed definition, it will go forward with a final rule. API will also use the results of this pilot test to create an industry guidance document on USAs.

Workshop and Technical Review

OPS is conducting a public workshop to discuss the results of the pilot test and to begin a technical review of the pilot results. Discussions at the workshop will include background on the USA initiative, the drinking water and ecological definitions, models that were used to apply the proposed definition, data that was gathered, how the data was processed using a geographic information system (GIS), and maps of the resulting USAs.

The workshop will begin a technical review of the pilot results. Drinking water and ecological resource experts from federal and state agencies, academia, environmental groups, and others have been invited to participate in a formal technical review of the pilot results. These experts include the Department of Interior's Office of the Secretary, Fish and Wildlife Service, and National Park Service; the Department of Agriculture's Forest Service; the Department of Commerce's National Marine Fisheries Service; the Environmental Protection Agency's Office of Groundwater and Drinking Water, and Office of Solid Waste and Emergency Response; state Nature Conservancies and Heritage Programs; state drinking water resource agencies; academia and other environmental experts. These reviewers will help to identify other data sets that might be utilized and other resources that might be considered, and to improve the definition's capability to identify USAs. OPS welcomes additional comments on the proposed definition and the pilot results. RSPA will use the final pilot results and comments received to move toward completing a USA definition by the end of this year.

Issued in Washington, DC on March 31, 2000.

Richard B. Felder,

Associate Administrator for Pipeline Safety.

[FR Doc. 00–8454 Filed 4–5–00; 8:45 am]

BILLING CODE 4910–60–P

DEPARTMENT OF TRANSPORTATION

Surface Transportation Board

49 CFR Part 1180

[STB Ex Parte No. 582 (Sub–No. 1)] [1]

Major Rail Consolidation Procedures

AGENCY: Surface Transportation Board, DOT.

ACTION: Advance Notice of Proposed Rulemaking.

SUMMARY: The Surface Transportation Board (Board) seeks public comment on modifications to its regulations governing proposals for major rail consolidations. We are issuing this advanced notice of proposed rulemaking to explore in more detail how our merger rules can and should be revised.

DATES: Notices of intent to participate are due on April 20, 2000. Comments are due on May 16, 2000. Replies are due on June 5, 2000.

ADDRESSES: An original and 25 copies of all paper documents filed in this proceeding must refer to STB Ex Parte No. 582 (Sub-No. 1) and must be sent to: Surface Transportation Board, Office of the Secretary, Case Control Unit, Attn: STB Ex Parte No. 582 (Sub-No. 1), 1925 K Street, NW., Washington, DC 20423–0001. In addition to submitting an original and 25 copies of all paper documents, parties must submit to the Board, on 3.5-inch IBM-compatible floppy diskettes (in, or convertible by and into, WordPerfect 7.0 format), an electronic copy of each such paper document. Any party may seek a waiver from the electronic submission requirement.[2]

FOR FURTHER INFORMATION CONTACT: Julia M. Farr, (202) 565–1613. [TDD for the hearing impaired: 1–800–877–8339.]

SUPPLEMENTARY INFORMATION: On January 24, 2000, we initiated a proceeding in STB Ex Parte No. 582 to obtain public views on the general subject of major rail consolidations [3] and the present and future structure of the North American railroad industry.[4]

[1] A copy of this decision is being served on all persons who participated in STB Ex Parte No. 582.

[2] Documents transmitted by facsimile (FAX) or electronic mail (e-mail) will not be accepted.

[3] Merger or control of at least two Class I railroads. Class I railroads are those United States railroads with annual operating revenues (in inflation-adjusted 1991 dollars) of at least $250 million.

[4] *See Public Views on Major Rail Consolidations,* STB Ex Parte No. 582 (STB served Jan. 24, 2000) (published in the **Federal Register** on Jan. 28, 2000, at 65 FR 4568).

In our recent decision,[5] which we issued after considering the extensive written comments that had been filed as well as the statements delivered in person at a 4-day hearing,[6] we concluded that the rail community is not now in a position to undertake what would likely be the final round of restructuring of the North American railroad industry,[7] and that our current rules are not adequate for addressing the broad concerns associated with reviewing any proposals that, if approved, would likely lead to just two large North American transcontinental railroads. We therefore announced that we would revise our merger rules, and, because we determined that it made no sense to develop new merger rules in the middle of what could likely be the final round of major rail mergers, we announced that we would decline to accept further filings involving a major transaction (defined at 49 CFR 1180.2(a)) until new merger rules are in place.

As indicated in our March 17 decision in STB Ex Parte No. 582 (slip op. at 3 n.6), we are not in a position to propose specific rules at this time because, while several parties raised broad issues of concern, specific rule changes were not the focus of our hearing. Instead, we announced that we would be issuing this advance notice of proposed rulemaking (ANPR) to explore in more detail how our merger rules can and should be revised.

Our current merger regulations[8] were adopted soon after passage of the Staggers Act of 1980. The widespread financial distress faced by our nation's rail carriers in the period leading up to enactment of that statute, and the associated deteriorating service levels faced by their customers, were due in large measure to an overly restrictive regulatory system that unduly limited the ability of railroads to effectively rationalize what was at that time a significant degree of excess rail infrastructure. The merger regulations—aimed at encouraging railroads to formulate proposals that would help rationalize excess capacity[9] so long as competition, access to essential service, and other public interest goals were not degraded—were a proper and reasoned response to the serious problems affecting railroads and their customers at that time.

As we explained in our STB Ex Parte No. 582 decision (slip op. at 6), however:

> The goals of that merger policy have largely been achieved. It does not appear that there are significant public interest benefits to be realized from further downsizing or rationalizing of rail route systems, as there is little of that activity left to do. Looking forward, the key problem faced by railroads—how to improve profitability through enhancing the service provided to their customers—is linked to adding to insufficient infrastructure, not to eliminating excess capacity.

Thus, it appears that further rail mergers now offer limited opportunity for additional efficiencies through elimination of excess capacity. And while extensions of single-line service can offer benefits to railroads and their customers, there is a view that these benefits could be better achieved, short of merger, through innovative joint marketing arrangements and other cooperative efforts, such as joint dispatching to more efficiently move trains through congested terminal areas.[10] Further, our experience has shown that, whether or not a particular proposed consolidation holds promise of significant service enhancing and cost reducing synergies, the integration task is itself quite complex and time consuming, and has, in a number of recent instances, been associated with severe service dislocations.

There were four broad concerns discussed at our hearing that persuaded us that we should begin a proceeding to revise our rules governing major rail mergers now. First, a significant number of shippers and smaller railroads stated that we need new rules to ensure that competition would not be curtailed by future mergers. Their concerns are heightened by the very real prospect that the rail industry is on the threshold of making another round of rail merger proposals that, if approved, could result in a transcontinental rail duopoly. Second, many parties argued that additional safeguards were necessary in our merger regulations to ensure that any future mergers are not accompanied by the serious service disruptions that have proved so costly to shippers, rail employees, and other rail carriers, including shortline railroads, and/or to provide suitable compensation arrangements if unforeseen disruptions do occur. Third, some parties, including Transportation Secretary Slater and representatives of rail employees, suggested that revisions to our merger rules are necessary to guarantee that railroads continue to be operated in as safe a manner as is possible and to provide other employee protections. Finally, certain parties raised concerns that would arise if one of the two large Canadian carriers, CN or CP, sought to merge with or control a large U.S. railroad.

Our merger regulations must advance our mandate—under which we are to approve mergers only to the extent consistent with the public interest, and under which we are to promote a safe and sound rail system that runs smoothly and efficiently to provide the service needed by rail customers—in a manner that is consistent with the overall rail transportation policy established by Congress.[11] In today's environment—with the industry far more concentrated than it was when our current regulations were fashioned; with the prospect that any further major rail merger would trigger strategic responses that could lead to a transcontinental rail duopoly; and with only limited opportunities remaining for significant merger-related efficiency gains—the time has come for us to consider whether we should revise our rail merger policy, as many have suggested,

[5] *See Public Views on Major Rail Consolidations,* STB Ex Parte No. 582 (STB served Mar. 17, 2000).

[6] Written comments were filed on or about February 29, 2000. The hearing was held in our offices in Washington, DC, on March 7–10, 2000.

[7] We explained that the railroad industry has consolidated aggressively in recent years and that now only six large railroads remain in the United States and Canada: The Burlington Northern and Santa Fe Railway Company (BNSF); Union Pacific Railroad Company (UP); CSX Transportation, Inc. (CSX); Norfolk Southern Railway Company (NS); Canadian National Railway Company (CN); and Canadian Pacific Railway Company (CP). Two smaller U.S. Class I railroads (Grand Trunk Western Railroad Incorporated and Illinois Central Railroad Company (IC)) are affiliated with CN. A third smaller U.S. Class I railroad (Soo Line Railroad Company) is affiliated with CP. A fourth smaller U.S. Class I railroad (The Kansas City Southern Railway Company (KCS)) remains independent but has entered into a comprehensive alliance with CN and IC.

[8] *See* 49 CFR part 1180, subpart A (49 CFR 1180.0–1180.9).

[9] *See* 49 CFR 1180.1(a) (The Surface Transportation Board encourages private industry initiative that leads to the rationalization of the nation's rail facilities and reduction of its excess capacity. One means of accomplishing these ends is rail consolidation).

[10] Joint marketing arrangements, which enable railroads to offer joint-line service almost as seamless as single-line service, could be more practicable and more likely to be in the public interest when the carriers connect largely end-to-end, rather than competing over broad territories. At the STB Ex Parte No. 582 hearing, Secretary of Transportation Rodney Slater and the Chief Executive Officers of several Class I railroads testified as to the benefits of such arrangements.

[11] Under 49 U.S.C. 11324, in considering a major rail merger proposal, the Board is to be guided by the public interest and must consider, at a minimum: the adequacy of transportation to the public; inclusion of other rail carriers in particular mergers; and financial, employee, and competitive issues. Moreover, the rail transportation policy of 49 U.S.C. 10101, which guides us in our regulatory activities, directs us, among other things, to promote safety, efficiency, good working conditions, an economically sound and competitive rail transportation system, and a transportation system that meets the needs of the public and the national defense.

with an eye towards affirmatively enhancing, rather than simply preserving, competition.[12] Moreover, with serious service concerns surrounding major rail mergers, our rules should also address those concerns and any other areas where the public interest is involved.

Overview

As we stated in our March 17 decision in STB Ex Parte No. 582 (slip op. at 6), we intend to revisit our approach to competitive issues such as the ''one-lump theory'' and the ''three-to-two'' question; downstream effects; the important role of smaller railroads in the rail network; service performance issues; how we should look at the types of benefits to be considered in the balancing test, and how we monitor benefits; how we should view alternatives to merger, such as alliances; employee issues such as ''cram down;'' and the international trade and foreign control issues that would be raised by any CN or CP proposal to combine with any large U.S. railroad.

Request for Comments

We request public comment and more detailed proposals on these issues as more fully described below and on any other ways in which our merger regulations should be modified to promote and enhance competition and/or other public interest goals. We have heard parties suggest a variety of rule changes, including those listed below. We invite all interested persons to comment on these types of changes and any others that commenters would like to propose. We encourage commenters to include specific draft rules for their proposed changes.[13] We also request the parties to prioritize the changes that they propose or endorse. We should note that it is not our intent to ''load up'' our rules so as to make them so onerous that they would necessarily foreclose all merger proposals. Rather, our objective is to identify reasonable means to assure that future merger proposals will promote public interest goals.

Downstream Effects

One change that we definitely intend to propose is elimination of the ''one case at a time'' rule at 49 CFR 1180.1(g). We had previously announced our determination to waive this rule in a decision in STB Finance Docket No. 33842 for that proceeding,[14] and the idea of modifying our rules to that effect for all future major rail consolidation proposals received broad support at the hearing. Under such a proposed change, we would examine in all future major merger proceedings the likely ''downstream'' effects of a proposed transaction, including the likely strategic responses to that transaction by non-applicant railroads.

Maintaining Safe Operations

Transportation Secretary Slater testified that a primary concern of the Department of Transportation is that safety be maintained throughout the rail network. We share that concern. Ensuring that safety concerns are addressed has been, and will remain, a primary goal of our environmental review in railroad merger cases. This process works best on a case-by-case basis, however, and we do not see any reason to alter our merger rules in this respect.[15]

Morever, in recent major rail mergers we have required applicants to work with the Federal Railroad Administration (FRA) to formulate Safety Integration Plans (SIPs) to ensure that safe operations would be maintained throughout the implementation process of any merger proposal that we approve. We also have instituted a joint rulemaking with FRA in which the two agencies, working in conjunction, have proposed regulations designed to ensure adequate and coordinated consideration of safety integration issues in railroad merger cases.[16] We have already solicited and received comments in that proceeding, and a joint hearing was held by the two agencies. Therefore, we see no need to address the SIPs process further in this proceeding. We intend to continue to require SIPs on a case-by-case basis, where appropriate, until the SIPs rulemaking proceeding is concluded.

Safeguarding Rail Service

Many of the shipper and shortline railroad parties at our hearing explained how the serious service disruptions that have been associated with recent mergers have caused significant harm to their businesses. These parties seek additional safeguards in our merger review process so that any future rail mergers would not cause such harm.

Many parties emphasized the need for performance measures with which post-merger service could be compared. Some parties also suggested that merger applicants be required to submit more detailed service integration or implementation plans, with enforceable penalties, to ensure against merger-related service degradation, and mandatory arbitration of post-merger service disputes (perhaps with post-arbitration recourse to the Board). Other parties suggested that merger applicants be required to submit plans for preserving service options available to small shippers (*e.g.,* grain shippers located on shortline railroads that cannot handle the newest generation of heavy rail cars or load trains of a length/volume as may be required by practices of individual Class I carriers.) Others expressed concern over the ability of carriers and shippers to acquire new or utilize existing infrastructure and capacity. Finally, many parties echoed Transportation Secretary Slater's concern that more consolidations in the industry could result in carriers that are ''too big to manage, yet too big to fail,'' and suggested that, in our assessment of the financial viability of a proposed merger, we examine the financial terms carefully with a view toward minimizing future service disruptions and any harm that could result from any such disruptions.

We seek comment on how our merger rules might best be revised to protect customers and shortline railroads from merger-related service disruptions and the loss of adequate infrastructure and capacity.

Promoting and Enhancing Competition

As explained above, we believe that the time has come to consider whether

[12] Agency decisions issued under our existing regulations have preserved and sometimes enhanced competition, while promoting efficiency-enhancing system rationalizations whose benefits were ultimately passed along to shippers in the form of lower rates and improved service. Now, however, we see little opportunity for substantial further efficiencies to be achieved through additional system rationalizations.

[13] We also intend in this rulemaking proceeding to propose necessary technical updates or corrections to the merger rules at the notice of proposed rulemaking (NPR) stage. To that end, we invite commenters to identify, and offer textual suggestions for modifying, existing provisions within 49 CFR part 1180 that are out-of-date or otherwise in need of correction.

[14] *See Canadian National Railway Company, Grand Trunk Western Railroad Incorporated, Illinois Central Railroad Company, Burlington Northern Santa Fe Corporation, and The Burlington Northern and Santa Fe Railway Company—Common Control,* STB Finance Docket No. 33842, Decision Nos. 1 & 1A (STB served Dec. 28, 1999) (published in the **Federal Register** on Jan. 4, 2000, at 65 FR 318).

[15] We note that our environmental rules at 49 CFR part 1105 are not specific to rail mergers and we therefore do not intend by this notice to reopen our environmental rules.

[16] *See Regulations on Safety Integration Plans Governing Railroad Consolidations, Mergers, Acquisitions of Control, and Start Up Operations; and Procedures for Surface Transportation Board Consideration of Safety Integration Plans in Cases Involving Railroad Consolidations, Mergers, and Acquisitions of Control,* STB Ex Parte No. 574, FRA Docket No. SIP–1, Notice No. 1 (Joint Notice of Proposed Rulemaking published at 63 FR 72225 (Dec. 31, 1998)).

we should alter our rail merger policy to place a greater emphasis on enhancing, rather than simply preserving, competition. Many of the competition-enhancing elements of recent mergers have been proposed by the applicants themselves, either in the initial application or in voluntary agreements reached with other parties, many of which have been encouraged by this agency. For example, in the CSX/NS/Conrail transaction, applicants proposed to use ''Shared Assets Areas'' to open up competition between CSX and NS for $700 million in rail traffic that had been exclusively served by Conrail. In addition, the applicants negotiated agreements that contained other pro-competitive elements.

At our recent hearing in STB Ex Parte No. 582, parties suggested various other means by which rail mergers could be used to promote and enhance competition in the rail industry. These included:

- Requiring merger applicants to maintain open gateways for all major routings.
- Requiring merger applicants to provide switching, at an agreed-upon fee, to all exclusively served shippers located within or adjacent to terminal areas. (The suggestion was that this measure be even broader than the switching condition that we imposed in the CSX/NS/Conrail proceeding—where we expanded upon the privately negotiated agreement that formed the basis of the condition—by including all shippers within or adjacent to terminal areas, and not just those shippers that had switching available prior to the consolidation, as in CSX/NS/Conrail.)
- Requiring merger applicants to offer, upon request, contracts for the competitive portion of joint-line routes when the joint-line partner has a bottleneck segment. (This would address shipper concerns that competitive-segment carriers may be unwilling to enter into contracts that would enable shippers to obtain bottleneck rate relief before the Board.)[17]
- Requiring merger applicants to provide a new through route at a reasonable interchange point whenever they control a bottleneck segment and the shipper has entered into a contract with another carrier for the competitive segment. (This would permit shippers who have entered into such contracts to immediately seek bottleneck rate relief, rather than first requiring them to file an access complaint to obtain a new through route.)
- Revising the application of the ''one-lump'' theory to rail mergers. (Based on that theory, the Board has generally declined to require access to additional carriers by exclusively served shippers whose sole carrier sought to merge with one of several connecting carriers. The Board has applied a rebuttable presumption that such shippers would not be competitively harmed. Proponents of this change urge the Board to provide such exclusively served shippers with access to an additional carrier, through trackage rights, in order to promote and enhance, rather than merely preserve, competition.)

We seek comment on which, if any, of these or any other measures should be considered for incorporation into our merger rules.

Shortline and Regional Railroad Issues

Many of the concerns expressed at our hearing in STB Ex Parte No. 582 by shortline and regional railroads, and how these might be reflected through modifications to our rail merger regulations, are subsumed in our discussion of competition and service issues above. Certain shortline and regional railroads also suggested that our revised merger rules require applicants to submit plans for promoting the viability of existing regional and shortline railroads, based on the ''Bill of Rights'' advocated by the American Short Line and Regional Railroad Association—which includes the right to compensation for service failures, the right to interchange and routing freedom (including the elimination of so-called paper and steel barriers), the right to competitive and nondiscriminatory pricing, and the right to fair and nondiscriminatory car supply. We seek comment on whether and how the concerns of shortline and regional railroads should be reflected in our merger rules.

Employee Issues

Many of the concerns expressed at our hearing in STB Ex Parte No. 582 by representatives of rail employees, and how those concerns might be reflected in changes to our merger rules, are subsumed in our discussion of safety and service issues above, and cross-border issues below. In addition, rail labor parties suggested at our hearing that we require merger applicants to agree to forgo any effort to ''cram down'' post-merger changes in collective bargaining agreements under the auspices of 49 U.S.C. 11321(a) and/or 11326, and/or under the auspices of Article I, Section 4 of our standard *New York Dock* labor conditions,[18] and/or to offer their employees expanded labor protection (*e.g.,* 10, rather than 6, years of benefits). We seek comment on whether and how these and other concerns of rail employees should be addressed.

''Three-to-Two'' Issues

Many parties to our STB Ex Parte No. 582 proceeding have suggested that the Board should give greater weight to arguments of competitive harm in those situations where the number of rail carrier alternatives within a corridor would be reduced by a merger from three to two. We seek comment on whether and how our assessment of ''three-to-two'' effects should be reflected in our new merger rules, or whether this issue is best left to a case-by-case examination based on the individual circumstances of each case, as it has been in the past.

Merger-Related Public Interest Benefits

Many parties at our hearing suggested that the Board should be more critical and skeptical of merger applicants' estimates of the synergies and other public interest benefits that would be produced by a proposed merger and that we should conduct post-merger monitoring to help ensure that the projected benefits are actually realized. Some have suggested that merger applicants be required to show that any claimed synergies or other public interest benefits could not be achieved short of merger, through marketing alliances or cooperative operating practices. We seek comment on how claims of public interest benefits should be treated under our merger rules.

Cross-Border Issues

We were presented, in the recent CN/IC merger proceeding, with a few issues relating to the fact that one of the applicant carriers was a Canadian railroad.[19] At our hearing in STB Ex

[17] *Central Power & Light Co.* v. *Southern Pac. Transp.Co.,* Nos. 41242, *et al.* (Dec. 31, 1996), clarified (Apr. 30, 1997), *aff'd sub nom. MidAmerican Energy Co.* v. *STB,* 169 F.3d 1099 (8th Cir. 1999), *reh'g denied* (Apr. 20, 1999), *cert. denied sub nom. Western Coal Traffic League* v. *STB,* 120 S. Ct. 372 (1999); *Union Pac. R.R.* v. *STB,* No. 98–1058 (D.C. Cir. Feb. 15, 2000).

[18] *New York Dock Ry.—Control—Brooklyn Eastern Dist.,* 360 I.C.C. 60, 85 (1979) (*New York Dock*).

[19] In that case, we determined that it would not be appropriate to require employees to forfeit their *New York Dock* protections if they chose not to move to Canada; we are continuing to monitor IC's Chicago gateway to address the concerns of North Dakota grain shippers that their product be able to continue to compete effectively with Canadian grain moving in new single-line service through Chicago over the combined CN-IC; and we also are monitoring whether there is any merger-related link to any unfair pricing practices in the lumber industry. *Canadian National Railway Company, Grand Trunk Corporation, and Grand Trunk*

Parte No. 582, we heard a far broader array of concerns over potential harms to the nation's interests if a Canadian railroad proposed to merge with a large U.S. railroad. Transportation Secretary Slater testified that such a proposal would lead to ''yet another uncertainty: the adequacy, consistency, and effectiveness of extra-territorial oversight,'' most notably with respect to FRA's ability to exercise its safety authority. In addition, the representative of the U.S. Department of Defense, explaining that the U.S. military relies on rail transportation in wartime, expressed concern over the possibility that predominant foreign control of a large U.S. railroad might adversely affect our nation's defense operations.

Also, Transportation Secretary Slater explained that foreign control of railroads operating in the United States could lead to traffic shifts that could have significant adverse financial impacts on U.S. ports and waterway systems. The Port Authorities of New York and New Jersey, of Boston, and of Virginia testified at the STB Ex Parte No. 582 hearing that a major merger proposal involving CN could, by shifting traffic flows away from their ports to the Port of Halifax, imperil the significant public investment in their port facilities. Similar concerns were raised by the Ports of Seattle and Tacoma with respect to shifts of traffic to the Port of Vancouver.

Finally, we heard concerns by the U.S. Department of Agriculture and by parties representing grain and lumber interests that a merger of a Canadian carrier with a large U.S. carrier could unfairly disadvantage their product in competition with Canadian grain and lumber in our domestic markets. They suggest that merger applicants would need to submit a more detailed systemwide operating plan and competitive impacts analysis that take these concerns into account.

We seek comments as to whether and how these concerns should be addressed in our merger rules.

Notice Of Intent To Participate. A copy of this decision is being served on all persons who participated in STB Ex Parte No. 582; however, persons who participated in STB Ex Parte No. 582 will *not* automatically be placed on the service list as parties of record for this (Sub-No. 1) rulemaking proceeding. Any persons interested in participating in this rulemaking proceeding (and being on the service list and receiving copies of filings) must file a written notice of intent to participate with the Board by April 20, 2000, in accordance with the filing requirements set forth below.

Service List. A service list, identifying all parties that have filed notices of intent to participate, will be issued by the Board by April 28, 2000.

Comments. Comments are due on May 16, 2000. Each party submitting comments to the Board also must serve a copy of such comments on each person indicated on the service list.

Replies. Replies are due on June 5, 2000. Each party submitting a reply to the Board also must serve a copy of such reply on each person indicated on the service list.

Paper Copies; Electronic Copies; Document Scanning. Each person filing a notice of intent to participate, comments, and/or a reply must file with the Board an original and 25 paper copies of: The notice of intent to participate (these must be filed with the Board by April 20, 2000); the comments (these must be filed with the Board and served on all parties by May 16, 2000); and the reply (these must be filed with the Board and served on all parties by June 5, 2000). Each such person must also submit, in addition to an original and 25 copies of all paper documents filed with the Board, an electronic copy of each such paper document.[20] The electronic copy should be on a 3.5-inch IBM-compatible floppy diskette, and should be in, or convertible by and into, WordPerfect 7.0. Any person may seek a waiver from the electronic submission requirement. The Board will not accept facsimile submissions in this proceeding because of the additional administrative burden required to process such filings. Also, the Board will not accept e-mail submissions in this or any other proceeding because we have not developed policies, procedures, or standards for accepting documents in that format.

The Board intends to make available to the public all filings submitted in this proceeding by publishing an image of each on the Board's website at www.stb.dot.gov under the ''Filings'' link. To ensure the highest quality image is captured during the scanning process the following filing instructions apply in this proceeding: Participants shall submit comments in accordance with existing rules, which require that all filings be clear and legible; on opaque, unglazed, durable paper not exceeding 8.5 by 11 inches; and able to be reproduced by photography. We also will require that only white paper be used; that printing appear on only one side of a page; that parties not employ color printing, but use only black or dark blue ink; and that all pages of filings, including cover letters and any attachments be paginated continuously. The original document must be submitted unbound and without tabs to reduce possible damage to the document during removal of fasteners and to facilitate the use of a high-speed mechanism for automated scanning. Multi-page documents may be clipped with a removable clip or other similar device. All filings, including oversize or other non-scannable items, will be available at the Board's Docket Room.

Subsequent Stages of This Proceeding. As indicated in our STB Ex Parte No. 582 decision (slip op. at 3 n.6), we plan: To issue a notice of proposed rulemaking (NPR) in this proceeding by October 3, 2000;[21] to provide a total of 100 days (ending January 11, 2001) for comments, replies, and rebuttal on the proposals contained in the NPR; and to issue final rules by June 11, 2001.

Small Entities. Because we have not yet proposed specific rules, we need not at this point examine the impacts of any proposed rules on small entities under the Regulatory Flexibility Act (5 U.S.C. 601 *et seq.*). We welcome, however, any comments respecting whether any suggested revisions to our regulations would have significant economic effects on any substantial number of small entities.

Environment. The issuance of this ANPR will not significantly affect either the quality of the human environment or the conservation of energy resources. Furthermore, we do not expect that any revisions to our regulations would significantly affect either the quality of the human environment or the conservation of energy resources. We welcome, of course, any comments respecting whether any suggested revisions would have any such effects.

Board Releases Available via the Internet. Decisions and notices of the Board, including this ANPR, are available on the Board's website at ''www.stb.dot.gov.''

Authority. 49 U.S.C. 721 and 11323–11325.

Dated: March 30, 2000.

Western Railroad Incorporated—Control—Illinois Central Corporation, Illinois Central Railroad Company, Chicago, Central and Pacific Railroad Company, and Cedar River Railroad Company, STB Finance Docket No. 33556, Decision No. 37 (STB served May 25, 1999), slip op. at 43, 37, and 39, respectively.

[20] For one exception, notices of intent to participate, we will not require the filing of electronic copies.

[21] The NPR will set forth our specific proposals for changes in our rail merger regulations.

By the Board, Chairman Morgan, Vice Chairman Burkes, and Commissioner Clyburn.

Vernon A. Williams,

Secretary.

[FR Doc. 00–8374 Filed 4–5–00; 8:45 am]

BILLING CODE 4915–00–P

DEPARTMENT OF THE INTERIOR

Fish and Wildlife Service

50 CFR Part 17

Endangered and Threatened Wildlife and Plants; 90-Day Finding on a Petition To Delist the Vernal Pool Fairy Shrimp and Vernal Pool Tadpole Shrimp

AGENCY: Fish and Wildlife Service, Interior.

ACTION: Notice of 90-day petition finding.

SUMMARY: We, the U.S. Fish and Wildlife Service (Service), announce a 90-day finding on a petition to remove the vernal pool fairy shrimp (*Branchinecta lynchi*) and the vernal pool tadpole shrimp (*Lepidurus packardi*) from the Federal list of threatened and endangered species pursuant to the Endangered Species Act (Act) of 1973, as amended. We find that the petition, other information the petitioner specifically requested we evaluate, and additional information available in our files did not present substantial scientific or commercial information indicating that delisting of the vernal pool fairy shrimp and vernal pool tadpole shrimp may be warranted.

DATES: The finding announced in this document was made on March 30, 2000.

ADDRESSES: Submit any data, information, comments, or questions concerning this petition to the Field Supervisor; Sacramento Fish and Wildlife Office; 2800 Cottage Way, Room W–2605; Sacramento, California 95825. The petition finding and supporting data are available for public inspection, by appointment, during normal business hours at the above address.

FOR FURTHER INFORMATION CONTACT: Kyle Merriam or Karen Miller at the Sacramento Fish and Wildlife Office (see **ADDRESSES** section above), or at 916/414–6600.

SUPPLEMENTARY INFORMATION:

Background

Section 4(b)(3)(A) of the Act (16 U.S.C. 1531 *et seq.*) requires that we make a finding on whether a petition to list, delist, or reclassify a species presents substantial information indicating that the petitioned action may be warranted. To the maximum extent practicable, this finding is to be made within 90 days of the receipt of the petition, and the finding is to be published promptly in the **Federal Register**. If the finding is that substantial information was presented, we will commence a status review of the involved species.

On February 29, 1996, we received a petition, dated the same day, to delist the vernal pool fairy shrimp (*Branchinecta lynchi*) and the vernal pool tadpole shrimp (*Lepidurus packardi*). The petition was submitted by the Fairy Shrimp Study Group (petitioner), consisting of the California Chamber of Commerce, Granite Construction, Teichert Aggregates, Sares-Regis Group, the California Cattlemen's Association, the Western Growers Association, and the California Farm Bureau Federation.

In a letter dated March 8, 1996, we notified the petitioner that a response would be delayed due to lack of funds and continuing resolutions in effect from November 14, 1995, to January 26, 1996, resulting in suspension of the listing program and reassignment of listing personnel to other activities. A moratorium on listing activities, and the consequent backlog at the time the moratorium was lifted, further delayed us from responding to the delisting petition.

On October 22, 1997, the petitioner filed a case in Federal court (Court) challenging our failure to address the delisting petition (*Fairy Shrimp Study Group* v. *Babbitt*, case number 1:97CV02481). Most of the issues discussed by the petitioner were included in a lawsuit filed by the Building Industry Association challenging the listing of the vernal pool crustaceans (*Building Industry Association* v. *Babbitt*, 979 F Supp. 893 (1997)), and were addressed by the Court in that case. The Court found that we had correctly determined the status of the vernal pool crustaceans as endangered and threatened and stated that (1) decisions to review petitions are not subject to judicial review; (2) we had used the best available information in our decision to list the vernal pool crustaceans; (3) the plaintiffs had been provided adequate notice of the concept of vernal pool complexes and vernal pool populations; and (4) we had not violated our Interagency Cooperative Policy for Peer Review in Endangered Species Activities (59 FR 34270).

In a settlement with the petitioner reached on October 26, 1999, we agreed to evaluate the best scientific and commercial information available as of that date. The data and information evaluated were to include relevant geographic information on the location of vernal pools and fairy shrimp, including information generated in section 7 consultations since February 29, 1996.

On September 19, 1994, we published the final rule to list the vernal pool fairy shrimp and vernal pool tadpole shrimp as threatened and endangered, respectively, in the **Federal Register** (59 FR 48136). The vernal pool fairy shrimp and vernal pool tadpole shrimp are crustacean species endemic to vernal pool habitats in California and southwestern Oregon. Both of these fresh-water crustaceans are about the size of a dime and live brief lives within vernal pools, seasonal wetlands that fill with water during fall and winter rains. These species were listed as a result of significant threats to their vernal pool habitats by a variety of human-caused activities, primarily urban development and conversion of land to agricultural use.

The factors for listing, delisting, or reclassifying species are described at 50 CFR 424.11. We may delist a species only if the best scientific and commercial data available substantiate that it is neither endangered nor threatened. Delisting may be warranted as a result of: (1) Extinction; (2) recovery; or (3) a determination that the original data used for classification of the species as endangered or threatened were in error.

The petition asserts that delisting of the vernal pool fairy shrimp and vernal pool tadpole shrimp is warranted because the original data used for classification of the vernal pool crustaceans as threatened and endangered were in error. The petition contends the listing was erroneous for four general reasons: (1) The original data and studies supporting the listing, including the original petitions to list the species, had fatal problems; (2) original information relied upon was not subjected to independent peer review; (3) new studies indicate that California has widespread vernal pool habitat that it is under little or no threat; and (4) the original listing information did not correctly establish the threats to the species and their vernal pool habitat.

We do not agree with the petitioner's assertion that the original data and studies supporting the listing, including the original petitions to list the species, had fatal problems. The petitions and information accompanying or cited in them fulfilled the requirements as set

forth in the Act and our regulations (50 CFR 424.14(b)). The Act requires us to base listing decisions on the best scientific and commercial data available. We diligently solicited all available information on the species through public notice, public comment periods, and public hearings to assure this standard was met. The petitioner did not identify any information available at the time of the listing that was not considered by us in the listing decision.

Despite the petition's focus on our assessment of historic vernal pool habitat, remaining vernal pool habitat, and habitat loss, these issues were irrelevant to the decision to list the vernal pool crustaceans, since the listing decision was not made as the result of historic habitat loss. As stated in the final rule, ''The purpose of addressing historic vernal pool losses in the proposed rule was to provide a historical context to the Central Valley ecosystem inhabited by the four crustacean species. In a legal context, the extent of historic habitat loss is of academic interest only, since the five factors at 50 CFR 424.11(c) under which species may qualify for listing look prospectively to the future rather than retrospectively on the past. The relevant issues are whether the current extent of fairy and tadpole shrimp habitat is depleted and/or fragmented enough to render the species vulnerable to extinction, or whether foreseeable threats similarly threaten the species'' (59 FR 48136). Section 4 of the Act, and regulations promulgated to implement the listing provisions of the Act (50 CFR part 424), set forth procedures for adding species to the Federal Lists. A species may be determined to be endangered or threatened due to one or more of the five factors described in section 4(a)(1) of the Act: (1) The present or threatened destruction, modification, or curtailment of its habitat or range; (2) overutilization for commercial, recreational, scientific, or educational purposes; (3) disease or predation; (4) inadequacy of existing regulatory mechanisms; and (5) other natural or manmade factors affecting its continued existence.

The petitioner suggested that estimates of habitat loss, historic vernal pool habitat, and remaining vernal pool habitat cited in the final rule were incorrect. We reviewed the information cited, and find that it represented the best scientific and commercial information available on the vernal pool crustaceans and their habitats. We can find no evidence to support the petitioner's arguments that the method of determining habitat loss in Holland (1988) was incorrect. The petitioner does not provide any alternative information about rates of habitat loss, or demonstrate this estimate was in error.

The petitioner argues that the proposed and/or final rules did not include random studies that could be extrapolated to unsampled areas or information about the locations of vernal pool crustacean populations, and questions the use of vernal pool complexes to evaluate vernal pool crustacean populations. However, the final rule does include a random study (Simovich *et al.* 1993) and describes the number and location of the known populations of the vernal pool crustaceans in adequate detail to convey relevant information about their range and distribution. The concepts of populations and vernal pool complexes were addressed throughout the listing process. The petitioner does not provide any evidence to support its claim that the methodology of Simovich *et al.* (1993) was flawed or that the results were not valid, and the petitioner does not propose a more effective method of evaluating vernal pool crustacean populations in its petition. We do not agree with the petitioner's assertion that vernal pool crustaceans are present in non-vernal pool habitats. We responded to this comment in the final rule and concluded that most of these areas represented historic vernal pool complexes that had been degraded by human activities (59 FR 48145). The petitioner presented no additional information to counter our finding.

We disagree with the petitioner's statement that the final rule did not receive peer review. We conducted extensive peer review on the listing of the vernal pool crustaceans. The petitioner did not, and has not, provided the names of individuals they believe should have reviewed the information contained in the rule, and has not provided any evidence that our method of peer review was not effective.

The petition refers to four pieces of information: Jones and Stokes (1994), Sugnet and Associates (1995), a study presented by Dave Smith of the Natural Resource Conservation Service at the 1994 Annual Conference of the California Association of Resource Conservation Districts, and comments made in 1996 by then-State Resources Secretary Douglas Wheeler ''at a meeting of a governor's task force.'' The petitioner cites these sources to provide additional information on the vernal pool crustaceans and their remaining vernal pool habitats. The petitioner provided a copy of Sugnet and Associates (1995), and we were able to obtain and review a copy of the first source (Jones and Stokes 1994); we were unable to obtain copies of the latter two sources and relied on the petitioner's presentation of the information. Jones and Stokes (1994) supports our findings that vernal pool habitats are threatened. Sugnet and Associates (1995) and the information attributed to Smith do not present new information about the current distribution of vernal pool habitats. The amount of remaining vernal pool habitats given by the petitioner supports rather than challenges the information presented in the final rule. The comments attributed to Wheeler do not provide any information about vernal pools or vernal pool crustaceans. None of these sources supports the petitioner's claim that vernal pool habitat is widespread and not threatened.

The petitioner states that existing regulatory mechanisms made listing the vernal pool crustaceans unnecessary. However, the final rule exhaustively describes how existing regulatory mechanisms were not sufficient to protect vernal pool crustacean habitats based on information in the administrative record. The petitioner notes that minimization measures taken for 22 projects mentioned in the final rule resulted in a net gain of vernal pools. However, many of these minimization measures were developed and implemented after the publication of the final rule listing the vernal pool crustaceans as threatened and endangered. Without the protection of the Act, many of these measures would not have been implemented.

As discussed in the final rule, we concluded that the vernal pool fairy shrimp and vernal pool tadpole shrimp were threatened and endangered as the result of urban development, conversion of native habitat to agriculture, and extinction by naturally occurring random events by virtue of the small, isolated nature of many of the remaining populations. The petitioner contends threats to vernal pool crustaceans discussed in the final rule were unverified. However, the threats described in the final rule were well supported, both with cited literature and other information available in the administrative record. The petitioner does not provide any data, arguments, or evidence to contradict our findings.

Since the petition to delist the vernal pool fairy shrimp and the vernal pool tadpole shrimp was submitted on February 29, 1996, we added new information to our files on the status of these species. We reviewed that information as requested by the petitioners, including relevant

geographic information on the location of vernal pools and fairy shrimp, and information generated in section 7 consultations and section 10 habitat conservation plans. Except for the discovery of a new population of vernal pool fairy shrimp in Jackson County, Oregon (Brent Helm, May Consulting Services, *in litt.* 1998), the current range and distribution of these species is as described in the final rule. Current information on the status of the vernal pool crustaceans indicates these species are not yet recovered. Significant threats still exist throughout their ranges, primarily urban development and conversion of land to intensive agricultural use. Habitat loss occurs from direct destruction and modification of vernal pools due to these and other activities, as well as modification of surrounding uplands that can alter vernal pool habitats indirectly. Population growth projections for California indicate the current trends of agricultural conversion and urbanization will continue to threaten the vernal pool crustacean species, particularly because areas containing vernal pools are primarily privately owned. The existing network of protected areas is not yet adequate to permanently protect these species from extinction. Continued implementation of the Act is necessary to achieve a conservation strategy that includes large areas of permanently protected vernal pool crustacean habitats that are not subject to the threats of urbanization and agricultural conversion.

Listing the fairy shrimp and the vernal pool tadpole shrimp as threatened and endangered provides for the development of a recovery plan, which is being developed. The recovery plan will describe site-specific actions necessary to achieve conservation and survival of the fairy shrimp and the vernal pool tadpole shrimp, and will establish a framework for agencies to coordinate activities and cooperate with each other in conservation efforts. The plan will also set recovery goals and priorities. After the plan is completed and implemented, we will continue to evaluate information on the status of and threats to these species, and undertake delisting actions as appropriate.

Thus, based on our review of information on the vernal pool crustaceans added to our files since the time of listing and the information that the petitioner asked us to review, we determine there is not substantial information to indicate that delisting of the vernal pool tadpole shrimp and vernal pool fairy shrimp may be warranted.

References Cited

Holland, R.F. 1988. What about this vernal pool business? Pages 351–355 in J.A. Kusler, S. Daly, and G. Brooks, editors. Urban wetlands, proceedings of the National Wetland Symposium. Oakland, California

Jones and Stokes Associates. 1994. Wetland resource planning recommendations for Chico, Clovis, Fresno, and surrounding areas of Butte and Fresno Counties. Sacramento, California. iv + 73 pp. + maps + appendices

Simovich, M., R. Brusca, and J. King. 1993. Invertebrate survey 1991–1993, PGT–PGE/Bechtel pipeline expansion project. Unpublished report to Bechtel Corporation, San Francisco, California.

Sugnet and Associates. 1995. Habitat conservation planning for California's Central Valley grassland prairie/vernal pool landscapes. National Association of Environmental Professionals Conference, Washington, D.C. 4 pp.

Author

The primary author of this document is Kyle E. Merriam, Sacramento Fish and Wildlife Office (see **ADDRESSES** section above).

Authority

The authority for this action is the Endangered Species Act of 1973, as amended (16 U.S.C. 1531 *et seq*).

Dated: March 30, 2000.

Jamie Rappaport Clark,

Director, U.S. Fish and Wildlife Service.

[FR Doc. 00–8420 Filed 4–4–00; 8:45am]

BILLING CODE 4310–55–P

DEPARTMENT OF COMMERCE

National Oceanic and Atmospheric Administration

50 CFR Part 679

[I.D. 032800B]

Fisheries of the Exclusive Economic Zone Off Alaska; Amendments 61/61/13/8 to Implement Major Provisions of the American Fisheries Act

AGENCY: National Marine Fisheries Service (NMFS), National Oceanic and Atmospheric Administration (NOAA), Commerce.

ACTION: Notice of intent; scoping period; request for comments.

SUMMARY: NMFS announces its intent to prepare an environmental impact statement (EIS) on proposed Amendment 61 to the Fishery Management Plan for the Groundfish Fishery of the Bering Sea and Aleutian Islands Area, proposed Amendment 61 to the Fishery Management Plan for Groundfish of the Gulf of Alaska, proposed Amendment 13 to the Fishery Management Plan for Bering Sea and Aleutian Islands King and Tanner Crab, and proposed Amendment 8 to the Fishery Management Plan for the Scallop Fishery off Alaska (FMPs). These fishery management plan (FMP) amendments would incorporate the provisions of the American Fisheries Act (AFA) into the FMPs and their implementing regulations. The scope of the analysis will include all proposed regulations and activities that would be implemented under the proposed FMP amendments.

DATES: Written comments will be accepted through May 8, 2000.

ADDRESSES: Written comments and requests to be included on a mailing list of persons interested in the EIS should be sent to Lori Gravel, NMFS, Alaska Region, P.O. Box 21668, Juneau, AK 99802, or delivered to the Federal Office Building, Room 457–1, 709 West 9th Street, Juneau, AK, and marked Attn: Lori Gravel.

FOR FURTHER INFORMATION CONTACT: Kent Lind, NMFS, (907) 586–7228 or kent.lind@noaa.gov.

SUPPLEMENTARY INFORMATION: NMFS manages the U.S. groundfish fisheries in the exclusive economic zone of the Bering Sea and Aleutian Islands Management Area (BSAI) and Gulf of Alaska (GOA) under the FMPs for groundfish in the respective areas. With Federal oversight, the State of Alaska (State) manages the commercial king crab and Tanner crab fisheries in the BSAI and the commercial scallop fishery off Alaska under the FMPs for those fisheries. The North Pacific Fishery Management Council (Council) prepared, and NMFS approved, the FMPs under the authority of the Magnuson-Stevens Fishery Conservation and Management Act, 16 U.S.C. 1801 *et seq*. Regulations implementing the FMPs appear at 50 CFR part 679. General regulations governing U.S. fisheries also appear at 50 CFR part 600.

EISs were prepared and filed when the FMPs for the groundfish fisheries of the BSAI and GOA were prepared and approved by NMFS in 1978 and 1981, respectively. On October 1, 1999, NMFS announced its intent to prepare a programmatic supplemental environmental impact statement that defined the Federal action under review as, among other things, all activities authorized and managed under the FMPs and all amendments thereto, and that addresses the conduct of the BSAI and GOA groundfish fisheries as a whole. Work on this programmatic SEIS

is ongoing. However, the programmatic SEIS will not examine in detail a range of alternatives specific to proposed Amendments 61/61/13/8 and implementation of the AFA.

The National Environmental Policy Act (NEPA) requires preparation of EISs for major Federal actions significantly affecting the quality of the human environment. NEPA regulations state: ''Environmental impact statements may be prepared, and are sometimes required, for broad Federal actions such as the adoption of new agency programs or regulations'' (40 CFR 1502.4). NMFS has determined that the new management programs mandated by the AFA and proposed to be implemented under Amendments 61/61/13/8 are of sufficient magnitude to warrant preparation of a separate EIS for these amendments.

The AFA, Div. C, Title II, Subtitle II, Pub. L. No. 105-277, 112 Stat. 2681 (1998), made profound changes in the management of the groundfish fisheries of the BSAI and, to a lesser extent, the groundfish fisheries of the GOA, crab fisheries of the BSAI, and scallop fishery off Alaska, and requires the adoption of new agency programs and regulations. With respect to the groundfish and crab fisheries off Alaska, the AFA—

(1) Established a new allocation scheme for BSAI pollock that allocates 10 percent of the BSAI pollock total allowable catch (TAC) to the Community Development Quota (CDQ) Program, and after allowance for incidental catch of pollock in other fisheries, allocates the remaining TAC as follows: 50 percent to vessels harvesting pollock for processing by inshore processors, 40 percent to vessels harvesting pollock for processing by catcher/processors, and 10 percent to vessels harvesting pollock for processing by motherships;

(2) Provided for the buyout of nine pollock catcher/processors and the subsequent scrapping of eight of these vessels through a combination of $20 million in Federal appropriations and $75 million in direct loan obligations;

(3) Required a fee of six-tenths (0.6) of one cent for each pound round weight of pollock harvested by catcher vessels delivering to inshore processors for the purpose of repaying the $75 million direct loan obligation;

(4) Listed by name and/or provided qualifying criteria for those vessels and processors eligible to participate in the non-CDQ portion of the BSAI pollock fishery;

(5) Increased observer coverage and scale requirements for AFA catcher/processors;

(6) Established limitations for the creation of fishery cooperatives in the catcher/processor, mothership, and inshore industry sectors of the BSAI pollock fishery;

(7) Required that NMFS grant individual allocations of the inshore BSAI pollock TAC to inshore catcher vessel cooperatives that form around a specific inshore processor and agree to deliver the bulk of their catch to that processor;

(8) Required harvesting and processing restrictions (commonly known as ''sideboards'') on fishermen and processors who have received exclusive harvesting or processing privileges under the AFA to protect the interests of fishermen and processors who have not directly benefitted from the AFA; and

(9) Established excessive share harvesting caps for BSAI pollock and directed the Council to develop excessive share caps for BSAI pollock processing and for the harvesting and processing of other groundfish.

Since the passage of the AFA in October 1998, NMFS has begun to implement specific provisions of the AFA through a variety of mechanisms. For the 2000 fishing year, NMFS implemented AFA-related permit requirements through an emergency interim rule published on January 5, 2000 (65 FR 380). AFA-related pollock allocations, monitoring requirements, and sideboard restrictions were implemented through a second emergency rule published January 28, 2000 (65 FR 4520). Required changes to the CDQ program were implemented through an emergency interim rule (64 FR 3877, January 26, 1999; extended at 64 FR 34743, June 29, 1999). Since the passage of the AFA, the Council also has taken an active role in the development of management measures to implement the various provisions of the AFA. The Council began consideration of the implications of the AFA during a special meeting in November 1998, during which it discussed AFA-related actions that were required for the 1999 fishing year. At its December 1998 meeting, the Council began an analysis of a suite of AFA-related management measures that subsequently became known as Amendments 61/61/13/8. The Council conducted an initial review of Amendments 61/61/13/8 and related AFA measures at its April 1999 meeting, and took final action on these amendments at its June 1999 meeting. At its December 1999 meeting, the Council reviewed the status of Amendments 61/61/13/8 and recommended that NMFS proceed immediately with an emergency interim rule to implement the Council's June 1999 recommendations so that AFA regulations could be in place prior to the start of the 2000 fisheries while Amendments 61/61/13/8 and the proposed rule to implement the amendments are under continued development and review by the Council and NMFS. In accordance with the Council's recommendation, NMFS has implemented the main provisions of Amendments 61/61/13/8 through the two emergency interim rules cited here to meet the statutory deadlines contained in the AFA for most management measures.

With this document, NMFS announces its intent to prepare an EIS on proposed Amendments 61/61/13/8 that defines the proposed Federal action under review as the suite of regulations and management measures that, taken as a whole, would implement the required provisions of the AFA as recommended by the Council under proposed Amendments 61/61/13/8. NMFS will present in the EIS an overview and an assessment of all impacts (including environmental, biological, economic, and socio-economic) that result from fishing and processing activities that would be conducted under proposed Amendments 61/61/13/8 and all reasonable alternatives. The Responsible Program Manager for this EIS is Steven Pennoyer, Administrator, Alaska Region, NMFS.

Alternatives

The EIS will consider a range of alternative management measures to implement the requirements of the AFA. The EIS will not consider detailed alternatives that are inconsistent with the statutory requirements of the AFA, or alternatives that would expand the provisions of the AFA into other groundfish or crab fisheries under the authority of the Council. This EIS also will not consider alternatives for the buyout and scrapping of ineligible catcher/processors or the 0.6 cent/lb fee on inshore pollock because these two provisions of the AFA have already been permanently implemented by NMFS through separate actions.

Alternatives will be grouped into three categories of management measures for the purpose of analysis: (1) Alternatives for allocating the BSAI pollock resource among industry sectors, vessels and processors, (2) alternatives for harvesting and processing sideboard limits for AFA vessels and processors in other fisheries, and (3) alternatives for monitoring and enforcement.

Alternatives for allocating the BSAI pollock resource. The AFA provides an explicit formula for allocating the BSAI pollock resource among the CDQ, inshore, mothership, and catcher/processor sectors. The AFA further defines which vessels and processors are eligible to participate in the inshore, mothership, and catcher/processor sectors and sets an overall harvesting excessive share cap of 17.5 percent of the BSAI pollock directed fishery which no individual, corporation, or other entity may exceed. The AFA also provides guidelines for the formation of fishery cooperatives and for the allocation of BSAI pollock to fishery cooperatives. The EIS will examine the environmental and economic effects of proposed Amendments 61/61/13/8 that would allocate pollock according to the formulas set out in the AFA and contrast this allocation alternative against the no-action alternative (i.e., the pre-AFA regime). The EIS also will analyze various alternative mechanisms for allocating BSAI pollock to fishery cooperatives that have been proposed by the Council including alternatives that would modify the restrictions on inshore cooperative membership and requirements that tie inshore cooperatives to specific processors. However, the EIS will not examine, in detail, different sector allocation formulas or alternative qualification criteria for vessels and processors that would be inconsistent with the AFA and that would be outside the authority of the Council to recommend or NMFS to implement.

Alternatives for harvesting and processing sideboards. Since November 1998, the Council has examined a wide range of alternative measures for harvesting and processing sideboards. At its June 1999 meeting, the Council considered various options for establishing groundfish harvesting sideboard amounts for catcher/processors and groundfish and crab sideboard amounts for catcher vessels. The Council also considered various methods by which harvesting sideboards would be managed and considered various exemptions for catcher vessels that meet certain criteria. The full range of harvesting sideboard alternatives considered by the Council will be analyzed in the EIS including the Council's preferred alternative under proposed Amendments 61/61/13/8. The EIS will also examine the crab processing sideboard alternatives developed by the Council. However, the EIS will not examine alternatives for groundfish processing sideboards and excessive processing shares. The Council is currently examining groundfish processing sideboards and excessive processing share limits as a separate action and is preparing a separate analysis to examine those issues for initial review at its June 2000 Council meeting.

Alternatives for monitoring and enforcement. A suite of new monitoring and enforcement measures are required to implement the limited access allocation program effectively for BSAI pollock and the accompanying sideboard measures proposed under Amendments 61/61/13/8. The AFA sets out new observer and scale requirements for catcher/processors but is silent with respect to monitoring and enforcement of both BSAI pollock and sideboard fisheries in the mothership and inshore sectors. The EIS will examine a range of monitoring and enforcement options including electronic recordkeeping and reporting requirements, observer coverage requirements, and scale and catch weighing requirements for all three sectors of the BSAI directed pollock fishery.

Issues

The environmental consequences section of the EIS will examine the impacts of fishing and processing under pre-AFA management regulations and under a range of representative alternative management alternatives to implement the requirements of the AFA. The environmental issues to be examined include: (1) marine habitat and water quality, (2) major fish species, (3) bycatch, (4) marine mammals, (5) seabirds, and (6) cumulative and synergistic impacts on species across the food web. In addition, the environmental consequences section will contain summary, interpretation, and predictions for economic and socioeconomic issues associated with the conduct of the BSAI pollock fishery on the following individuals and groups: (1) Those who participate in harvesting the fishery resources off Alaska, (2) those who process and market the fishery resources harvested off Alaska, (3) those who are involved in allied support industries, (4) those who consume these fishery products, (5) those who rely on these fishery resources for subsistence or recreational needs, (6) those who benefit from non-consumptive uses of these living marine resources, (7) those involved in managing and monitoring these fisheries, and (8) affected fishing communities.

NMFS requests public input on the range of environmental, economic and socioeconomic issues that should be considered in this EIS on proposed Amendments 61/61/13/8.

Public Involvement

Scoping for the EIS begins with publication of this document. The Council will receive a presentation of the EIA project and the public will have opportunity to comment on the scope of the EIS at the Council's April 2000 meeting (Anchorage, AK, Hilton Hotel, April 12–17, 2000). Additional scoping meetings are not scheduled. The proposed action has already been subject to a lengthy development process that has included early and meaningful opportunity for public participation in the development of the proposed action including eight Council meetings beginning with a special Council meeting on the AFA in November 1998, and including every Council meeting since that date. The Council also has formed special committees to examine specific aspects of the AFA in detail including the structure and management of inshore cooperatives and the issue of processor sideboards. The Council provided notice of these meetings and they were open to the public.

Dated: April 3, 2000.

Bruce C. Morehead,

Acting Director, Office of Sustainable Fisheries, National Marine Fisheries Service.

[FR Doc. 00–8576 Filed 4–5–00; 8:45 am]

BILLING CODE 3510–22–F

Notices

Federal Register

Vol. 65, No. 67

Thursday, April 6, 2000

This section of the FEDERAL REGISTER contains documents other than rules or proposed rules that are applicable to the public. Notices of hearings and investigations, committee meetings, agency decisions and rulings, delegations of authority, filing of petitions and applications and agency statements of organization and functions are examples of documents appearing in this section.

ADVISORY COMMISSION ON ELECTRONIC COMMERCE

Meeting Cancellation

The Advisory Commission on Electronic Commerce was established by Public Law 105–277 to conduct a thorough study of federal, state, local and international taxation and tariff treatment of transactions using the Internet and Internet access and other comparable intrastate, interstate or international sales activities. The Commission is to report its findings and recommendations to Congress no later than April 21, 2000. Notice is hereby given, that the Advisory Commission on Electronic Commerce has cancelled a telephone conference call meeting, which was scheduled for Monday, April 10, 2000, and noticed in the **Federal Register** on Monday, March 27, 2000, at 65 FR 16163.

Information about the activities of the Commission can be found at the Commission's Web site located at: www.ecommercecommission.org.

A listing of the members of the Commission and details concerning their appointment were published in the **Federal Register** on June 9, 1999, at 64 FR 30958.

Heather Rosenker,

Executive Director.

[FR Doc. 00–8510 Filed 4–5–00; 8:45 am]

BILLING CODE 0000–00–P

AGENCY FOR INTERNATIONAL DEVELOPMENT

Notice of Public Information Collection Requirements Submitted to OMB for Review

SUMMARY: U.S. Agency for International Development (USAID) has submitted the following information collection to OMB for review and clearance under the Paperwork Reduction Act of 1995, Public Law 104– Comments regarding this information collection are best assured of having their full effect if received within 30 days of this notification. Comments should be addressed to: Desk Officer for USAID, Office of Information and Regulatory Affairs, Office of Management and Budget (OMB), Washington DC 20503. Copies of submission may be obtained by calling (202) 712–1365.

SUPPLEMENTARY INFORMATION:

OMB Number: OMB 0412–0552.

Form Number: N/A.

Title: Financial Status Report.

Type of Submission: Renewal of Information Collection.

Purpose: USAID wants to require grant and cooperative agreement recipients who work in multiple countries to provide expenditure reports by country. USAID has stated in the ''remarks'' section of SF–269 and SF–269A, or other applicable approved financial report form that ''For assistance programs which cover programs in more than one country, recipients shall specify by country the amount of the total Federals share which was expended for each country * * *.'' The USAID has sought a class deviation to the statute from the Office of Management and Budget in accordance with the 22 CFR 226.4. The information being collected so that USAID may report to Congress, the Office of Management and Budget and other requesters per the requirements of the Government Performance and Results Act and the Government Management Reporting Act. Also, the reporting requirements are necessary to assure that USAID funds are expended in accordance with Statutory requirements and USAID policies.

Annual Reporting Burden:

Respondents: 80.

Total annual responses: 320.

Total annual hours requested: 800 hours.

Dated: March 31, 2000.

Joanne Paskar,

Acting Chief, Information and Records Division, Office of Administrative Services, Bureau for Management.

[FR Doc. 00–8508 Filed 4–5–00; 8:45 am]

BILLING CODE 6116–01–M

DEPARTMENT OF AGRICULTURE

Natural Resources Conservation Service

Notice of Proposed Change to the Natural Resources Conservation Service's National Handbook of Conservation Practices

AGENCY: Natural Resources Conservation Service (NRCS), U.S. Department of Agriculture, New York State Office.

ACTION: Notice of availability of proposed changes in the NRCS National Handbook of Conservation Practices, Section IV of the New York State NRCS Field Office Technical Guide (FOTG) for review and comment.

SUMMARY: It is the intention of NRCS to issue a revised conservation practice standard in its National Handbook of Conservation Practices. This revised standard is: Wetland Enhancement (NY659).

DATES: Comments will be received on or before May 8, 2000.

FOR FURTHER INFORMATION CONTACT: Inquire in writing to Richard D. Swenson, State Conservationist, Natural Resources Conservation Service, (NRCS), 441 S. Salina Street, Fifth Floor, Suite 354, Syracuse, New York, 13202–2450.

A copy of this standard is available from the above individual.

SUPPLEMENTARY INFORMATION: Section 343 of the Federal Agricultural Improvement and Reform Act of 1996 states that revisions made after enactment of the law to NRCS State Technical Guides used to carry out highly erodible land and wetland provisions of the law shall be made available for public review and comment. For the next 30 days the NRCS will receive comments relative to the proposed changes. Following that period a determination will be made by the NRCS regarding disposition of those comments and a final determination of change will be made.

Dated: March 16, 2000.

Melvin Womack,

Deputy State Conservationist, Natural Resources Conservation Service, Syracuse, NY.

[FR Doc. 00–8440 Filed 4–5–00; 8:45 am]

BILLING CODE 3410–16–P

COMMISSION ON CIVIL RIGHTS

Sunshine Act Meeting

AGENCY: U.S. Commission on Civil Rights.

DATE AND TIME: Friday, April 14, 2000, 9:30 a.m.

PLACE: U.S. Commission on Civil Rights, 624 Ninth Street, N.W., Room 540, Washington, DC 20425.

STATUS:

Agenda

I. Approval of Agenda
II. Approval of Minutes of March 3, 2000 Meeting
III. Announcements
IV. Staff Director's Report
V. State Advisory Committee Reports
- Community Concerns About Law Enforcement in Sonoma County (California)
- Equal Educational Opportunity for Hispanic Students in the Oklahoma City Public Schools (Oklahoma)

VI. Police Practices and Civil Rights in New York City Report
VII. Hawaiian Civil Rights Issues
VIII. Future Agenda Items

CONTACT PERSON FOR FURTHER INFORMATION: David Aronson, Press and Communications (202) 376–8312.

Edward A. Hailes, Jr.,
Acting General Counsel.
[FR Doc. 00–8644 Filed 4–4–00; 2:04 pm]
BILLING CODE 6335–0–M

DEPARTMENT OF COMMERCE

Office of the General Counsel; Request for Public Comments on Dispute Resolution Issues Relating to Section 3002(b) of the Anticybersquatting Consumer Protection Act

AGENCY: Department of Commerce.

ACTION: Notice; 15-day re-opening of comment period.

SUMMARY: Pursuant to public request, the Department of Commerce re-opens for an additional 15 days the response period for our request for public comments and suggestions concerning the ''Anticybersquatting Consumer Protection Act'' (or ''the Act'') (Public Law 106–113) and the resolution of Internet domain name disputes involving the personal names of individuals. The original notice and request for comments was published on February 29, 2000, with written comments to be provided by March 30, 2000 (65 FR 10763). Detailed background information, as well as the scope of this request, may be found in the above-cited **Federal Register** notice.

DATES: Written comments must be received no later than April 21, 2000. Under no circumstances shall any written comments received after April 21, 2000 be considered by the Department of Commerce.

ADDRESSES: Please address written comments to: Department of Commerce, Room 5876; 14th & Constitution Avenues, NW; Washington, DC 20230, marked as ''Public Comments'' to the attention of Sabrina McLaughlin, Office of General Counsel. If possible, paper submissions should be accompanied by disks formatted in WordPerfect, Microsoft Word, or ASCII. As an alternate means of submission, comments may be transmitted by facsimile to Sabrina McLaughlin at (202) 482–0512. Electronic submissions may be directed to *DomainName@doc.gov.* Any accompanying diskettes should be labeled with the name of the party submitting comment and the version of the word processing program used to create the document.

FOR FURTHER INFORMATION CONTACT: Sabrina McLaughlin by telephone at (202) 482–4265, by mail to her attention addressed to: Department of Commerce, Room 5876; 14th & Constitution Avenues, NW; Washington, DC 20230, or by electronic mail at *DomainName@doc.gov.*

SUPPLEMENTARY INFORMATION: The Department of Commerce has determined that it is appropriate to re-open the record for public comment in order: (1) To officially accommodate the significant number of comments being filed somewhat beyond the original comment deadline; and (2) to ensure that the Department receives the benefit of broad public perspectives as the Department, in consultation with the United States Patent and Trademark Office and the Federal Election Commission, proceeds to study and to recommend to Congress appropriate guidelines and procedures for resolving disputes involving the registration or use by a person of a domain name that includes the personal name of another person, in whole or in part, or a name confusingly similar thereto. The Department's guidelines and recommendations will take the form of a Report to Congress, as required under section 3006 of the Act.

The Department will not be posting comments online. However, because all submissions received pursuant to a solicitation for public comment are treated as public information, respondents should not submit materials that they do not desire to be made public.

Dated: April 3, 2000.
Andrew J. Pincus,
General Counsel.
[FR Doc. 00–8588 Filed 4–5–00; 8:45 am]
BILLING CODE 3510–BW–P

DEPARTMENT OF COMMERCE

Federal Trade Commission

Public Workshop: Alternative Dispute Resolution for Consumer Transactions in the Borderless Online Marketplace

AGENCY: International Trade Administration, Department of Commerce; Federal Trade Commission.

ACTION: Notice Announcing Dates and Location of Workshop and Extending Deadline for Public Comments.

SUMMARY: The United States Department of Commerce (the ''Department'') and the Federal Trade Commission (the ''FTC'') have (1) set their public workshop on alternative dispute resolution (''ADR'') for online consumer transactions (announced in 65 FR 7831 (Feb. 16, 2000)) for June 6–7, 2000, in the Department of Commerce Main Auditorium; and (2) extended the deadline for receipt of comments to April 19, 2000.

DATES AND LOCATION: The deadline for written comments has been extended to April 19, 2000. The workshop will be held June 6 and 7, 2000 in the Department of Commerce, Main Auditorium, 1401 Constitution Avenue, NW, Washington, DC 20239.

ADDRESSES: Mail written comments to Secretary Federal Trade Commission, Room H–159, 600 Pennsylvania Avenue, NW, Washington, DC 20580.

SUBMISSION OF DOCUMENTS: Comments should be captioned ''Alternative Dispute Resolution for Consumer Transactions in the Borderless Online Marketplace.'' To enable prompt review and public access, paper submissions should include three hard copies and a version on diskette in ASCII, WordPerfect (please specify version), or Microsoft Word (please specify version) format. Diskettes should be labeled with the name of the party and the name and version of the word processing program used to create the document. As an alternative to paper submissions, email comments to: *adr@ftc.gov.* Messages to that address will receive a reply in acknowledgment. Comments submitted in electronic form should be in ASCII, WordPerfect (please specify version), or Microsoft Word (please specify version) format.

Written comments will be available for public inspection in accordance with

the Freedom of Information Act, 5 U.S.C. 552 and Commission regulations, 16 CFR Part 4.9 on normal business days between the hours of 8:30 a.m. and 5:00 p.m. at 600 Pennsylvania Avenue, NW, Washington, DC 20580. The Department and the FTC will make this notice, and, to the extent possible, all papers or comments received in response to this notice available to the public through the Internet at: *http://www.ecommerce.gov/adr.*

FOR FURTHER INFORMATION CONTACT: A workshop agenda will be published closer to the date of the workshop. For questions about the workshop, please contact either Kate Rodriguez, International Trade Administration, phone (202) 482–2145; email: *kate rodriguez@ita.doc.gov* or Maneesha Mithal, Federal Trade Commission, phone: (202) 326–2771; email: *mmithal@ftc.gov.* All materials relating to the workshop can also be found at http://www.ecommerce.gov/ad.

By direction of the Commission.

Donald S. Clark

Secretary.

Barbara S. Wellbery,

Counsellor to the Under Secretary for Electronic Commerce International Trade Administration, Department of Commerce.

[FR Doc. 00–8425 Filed 4–5–00; 8:45 am]

BILLING CODE 6750–01–M

DEPARTMENT OF COMMERCE

Economics and Statistics Administration; Bureau of Economic Analysis Advisory Committee Meeting

AGENCY: Bureau of Economic Analysis.

ACTION: Notice of public meeting.

SUMMARY: Pursuant to the Federal Advisory Committee Act (Public Law 92–463, as amended by Public Law 94–409, Public Law 96–523, and Public Law 97–375), we are giving notice of a meeting of the Bureau of Economic Analysis Advisory Committee. The meeting's agenda is as follows:

1. Discussion of the recent National Income and Product Account (NIPA) comprehensive revision, including the implications for future work.
2. Discussion of the measurement of difficult-to-measure sectors such as the banking sector.
3. Discussion of the measurement of high-tech and E-business/E-commerce.
4. Discussion of topics for future agendas.

DATES: On Friday, May 5, 2000, the meeting will begin at 9:30 a.m. and adjourn at approximately 4 p.m.

ADDRESSES: The meeting will take place at BEA, 2nd floor, Conference Room C&D, 1441 L Street NW., Washington, DC 20230.

FOR FURTHER INFORMATION CONTACT: J. Steven Landefeld, Director, Bureau of Economic Analysis, U.S. Department of Commerce, Washington, DC 20230; telephone: 202–606–9600.

Public Participation

This meeting is open to the public. Because of security procedures, anyone planning to attend the meeting must contact Colleen Ryan of BEA at 202–606–9603 in advance. The meeting is physically accessible to people with disabilities. Requests for sign language interpretation or other auxiliary aids should be directed to Colleen Ryan at 202–606–9603.

SUPPLEMENTARY INFORMATION: The Committee was established on September 2, 1999, to advise the Bureau of Economic Analysis (BEA) on matters related to the development and improvement of BEA's national, regional, and international accounts. This will be the Committee's first meeting.

Dated: March 30, 2000.

J. Steven Landefeld,

Director, Bureau of Economic Analysis.

[FR Doc. 00–8432 Filed 4–5–00; 8:45 am]

BILLING CODE 3510–06–M

DEPARTMENT OF COMMERCE

International Trade Administration

[A–427–801, A–428–801, A–475–801, A–588–804, A–485–801, A–559–801, A–401–801, A–412–801]

Antifriction Bearings (Other Than Tapered Roller Bearings) and Parts Thereof From France, Germany, Italy, Japan, Romania, Singapore, Sweden, and the United Kingdom; Preliminary Results of Antidumping Duty Administrative Reviews, Partial Rescission of Administrative Reviews, and Notice of Intent to Revoke Orders in Part

AGENCY: Import Administration, International Trade Administration, Department of Commerce.

ACTION: Notice of preliminary results of antidumping duty Administrative reviews, partial rescission of Administrative Reviews, and notice of intent to revoke orders in part.

SUMMARY: In response to requests from interested parties, the Department of Commerce is conducting administrative reviews of the antidumping duty orders on antifriction bearings (other than tapered roller bearings) and parts thereof from France, Germany, Italy, Japan, Romania, Singapore, Sweden, and the United Kingdom. The merchandise covered by these orders are ball bearings and parts thereof, cylindrical roller bearings and parts thereof, and spherical plain bearings and parts thereof. The reviews cover 35 manufacturers/exporters. The period of review is May 1, 1998, through April 30, 1999.

We are rescinding the reviews for 14 other manufacturers/exporters because the requests for reviews of these firms or types of bearings were withdrawn in a timely manner.

We received four requests for revocation of various orders in part. We preliminarily intend to revoke two orders in part and do not preliminary intend to revoke two other orders in part (see *Intent to Revoke and Intent Not to Revoke* below).

We have preliminary determined that sales have been made below normal value by various companies subject to these reviews. If these preliminary results are adopted in our final results of administrative reviews, we will instruct U.S. Customs to assess antidumping duties on all appropriate entries.

We invite interested parties to comment on these preliminary results. Parties who submit comments in these proceedings are requested to submit with each argument (1) a statement of the issue and (2) a brief summary of the argument.

EFFECTIVE DATE: April 6, 2000.

FOR FURTHER INFORMATION CONTACT: Please contact the appropriate case analysts for the various respondent firms as listed below, at Import Administration, International Trade Administration, U.S. Department of Commerce, Washington, D.C. 20230; telephone: (202) 482–4733.

France

Lyn Johnson (SKF), Georgia Creech (SNFA), Edythe Artman (SNR), Robin Gray, or Richard Rimlinger.

Germany

Mark Ross (Torrington Nadellager), Farah Naim (SKF), Hermes Pinilla (FAG), Suzanne Brower (INA), Edythe Artman (SNR), Thomas Schauer (Paul Muller), Davina Hashmi (MPT), Robin Gray, or Richard Rimlinger.

Italy

Minoo Hatten (SKF), Suzanne Brower (FAG), Georgia Creech (SNFA/Somecat), or Robin Gray.

Japan

J. David Dirstine (Nachi-Fujikoshi, Tsubaki, Koyo), Thomas Schauer (NTN, NSK), Lyn Johnson (NPBS, Nakai Bearing), Sergio Gonzalez (Asahi Seiko, IKS), Stacey King (IJK, Takeshita), Minoo Hatten (Nankai Seiko), Larry Tabash (Osaka Pump), George Callen (KYK), Robin Gray, or Richard Rimlinger.

Romania

Suzanne Brower (TIE), J. David Dirstine (Koyo), or Robin Gray.

Singapore

George Callen (NMB/Pelmec) or Robin Gray.

Sweden

Georgia Creech (SKF) or Robin Gray.

United Kingdom

Hermes Pinilla (FAG, Barden), Georgia Creech (SNFA), Edythe Artman (SNR), Robin Gray, or Richard Rimlinger.

SUPPLEMENTARY INFORMATION:

The Applicable Statute

Unless otherwise indicated, all citations to the Tariff Act of 1930, as amended (the Act), are references to the provisions effective January 1, 1995, the effective date of the amendments made to the Act by the Uruguay Round Agreements Act (URAA). In addition, unless otherwise indicated, all citations to the Department of Commerce's (the Department's) regulations are to 19 CFR part 351 (1999).

Background

On May 15, 1989, the Department published in the **Federal Register** (54 FR 20909) the antidumping duty orders on ball bearings and parts thereof (BBs), cylindrical roller bearings and parts thereof (CRBs), and spherical plain bearings and parts thereof (SPBs) from France, Germany, Italy, Japan, Romania, Singapore, Sweden, and the United Kingdom. Specifically, these orders cover BBs, CRBs, and SPBs from France, Germany, and Japan, BBs and CRBs from Italy, Sweden, and the United Kingdom, and BBs from Romania and Singapore. On June 30, 1999, in accordance with 19 CFR 351.213, we published a notice of initiation of administrative reviews of these orders (64 FR 35124). The period of review (POR) is May 1, 1998, through April 30, 1999. The Department is conducting these administrative reviews in accordance with section 751 of the Act.

Subsequent to the initiation of these reviews, we received timely withdrawals of the requests we had received for review of Augusta Un'Azienda Finmeccanica (France), AVSA S.A.R.L. (France), Wyko Export (France), NTN (Germany), Wyko Export of Queen Cross (Germany), AVSA S.A.R.L. (Germany), Mannesmann Sachs AG (Germany), Meter S.p.A. (Italy), SNR Roulements (Italy), Augusta Un'Azienda Finmeccanica (Italy), Isuzu Motors (Japan), Wyko Export of Queen Cross (Sweden), NSK Bearings Europe Ltd./RHP Bearings Ltd. (United Kingdom), and Augusta Un'Azienda Finmeccanica (United Kingdom). Because there were no other requests for review of the above-named firms, we are rescinding the reviews with respect to these companies in accordance with 19 CFR 351.213(d).

Scope of Reviews

The products covered by these reviews are antifriction bearings (other than tapered roller bearings) and parts thereof (AFBs) and constitute the following merchandise:

1. *Ball Bearings and Parts Thereof:* These products include all AFBs that employ balls as the rolling element. Imports of these products are classified under the following categories: antifriction balls, ball bearings with integral shafts, ball bearings (including radial ball bearings) and parts thereof, and housed or mounted ball bearing units and parts thereof.

Imports of these products are classified under the following Harmonized Tariff Schedules (HTSUS) subheadings: 3926.90.45, 4016.93.00, 4016.93.10, 4016.93.50, 6909.19.5010, 8431.20.00, 8431.39.0010, 8482.10.10, 8482.10.50, 8482.80.00, 8482.91.00, 8482.99.05, 8482.99.2580, 8482.99.35, 8482.99.6595, 8483.20.40, 8483.20.80, 8483.50.8040, 8483.50.90, 8483.90.20, 8483.90.30, 8483.90.70, 8708.50.50, 8708.60.50, 8708.60.80, 8708.70.6060, 8708.70.8050, 8708.93.30, 8708.93.5000, 8708.93.6000, 8708.93.75, 8708.99.06, 8708.99.31, 8708.99.4960, 8708.99.50, 8708.99.5800, 8708.99.8080, 8803.10.00, 8803.20.00, 8803.30.00, 8803.90.30, and 8803.90.90.

2. *Cylindrical Roller Bearings, Mounted or Unmounted, and Parts Thereof:* These products include all AFBs that employ cylindrical rollers as the rolling element. Imports of these products are classified under the following categories: antifriction rollers, all cylindrical roller bearings (including split cylindrical roller bearings) and parts thereof, and housed or mounted cylindrical roller bearing units and parts thereof.

Imports of these products are classified under the following HTSUS subheadings: 3926.90.45, 4016.93.00, 4016.93.10, 4016.93.50, 6909.19.5010, 8431.20.00, 8431.39.0010, 8482.40.00, 8482.50.00, 8482.80.00, 8482.91.00, 8482.99.25, 8482.99.35, 8482.99.6530, 8482.99.6560, 8482.99.70, 8483.20.40, 8483.20.80, 8483.50.8040, 8483.90.20, 8483.90.30, 8483.90.70, 8708.50.50, 8708.60.50, 8708.93.5000, 8708.99.4000, 8708.99.4960, 8708.99.50, 8708.99.8080, 8803.10.00, 8803.20.00, 8803.30.00, 8803.90.30, and 8803.90.90.

3. *Spherical Plain Bearings, Mounted and Unmounted, and Parts Thereof:* These products include all spherical plain bearings that employ a spherically shaped sliding element and include spherical plain rod ends.

Imports of these products are classified under the following HTSUS subheadings: 3926.90.45, 4016.93.00, 4016.93.10, 4016.93.50, 6909.50.10, 8483.30.80, 8483.90.30, 8485.90.00, 8708.93.5000, 8708.99.50, 8803.10.00, 8803.20.00, 8803.30.00, 8803.90.30, and 8803.90.90.

The size or precision grade of a bearing does not influence whether the bearing is covered by the order. For a detailed discussion of the scope of the orders being reviewed, including a list of scope determinations, see *Antifriction Bearings (Other Than Tapered Roller Bearings) and Parts Thereof from France, Germany, Italy, Japan, Romania, Sweden and the United Kingdom; Final Results of Antidumping Duty Administrative Reviews,* 64 FR 35590 (July 1, 1999) *(AFBs 9)*. In addition, see Memorandum from Laurie Parkhill to Richard W. Moreland, dated December 13, 1999, and on file in the Central Records Unit (CRU), Main Commerce Building, Room B-099. This memorandum serves to exclude certain parts of a rotation prevention device, manufactured by Sanden International (U.S.A.) Inc., from the order on BBs from Japan. We have also determined that a fan center assembly, which is designed exclusively for and imported for use in the production of a V8 diesel engine produced by DMAX, Ltd., is not within the scope of the order on BBs from Japan. See Memorandum from Laurie Parkhill to Richard W. Moreland, dated March 13, 2000, and on file in the CRU, Room B–099.

Although the HTSUS item numbers are provided for convenience and customs purposes above, written descriptions of the scope of these proceedings remain dispositive.

These reviews cover the following firms and merchandise:

Name of firm	Merchandise
France	
SKF France (including all relevant affiliates)	All.
SNFA S.A. (SNFA France)	Ball and Cylindrical.
Societe Nouvelle de Roulements (SNR France)	Ball and Cylindrical.
Germany	
FAG Kugelfischer George Schaefer AG (FAG Germany)	Ball and Cylindrical.
INA Walzlager Schaeffler oHG (INA)	All.
MPT Prazisionsteile GmbH Mittweida (MPT)	Cylindrical
Paul Mller GmbH and Co. KG (Paul Mller)	Ball.
SKF GmbH (including all relevant affiliates) (SKF Germany)	All.
Societe Nouvelle de Roulements (SNR Germany)	Ball and Cylindrical.
Torrington Nadellager GmbH (Torrington)	All.
Italy	
FAG Italia, S.p.A. (including all relevant affiliates) (FAG Italy)	Ball and Cylindrical.
SKF-Industrie, S.p.A. (including all relevant affiliates) (SKF Italy)	Ball.
Somecat, S.p.A./SNFA Bearings Ltd. (Somecat/SNFA)	Ball.
Japan	
Asahi Seiko Co., Ltd. (Asahi Seiko)	Ball.
Inoue Jukuuke Kogyo (IJK)	Ball.
Izumoto Seiko Co., Ltd. (IKS)	Ball.
Koyo Seiko Co., Ltd. (Koyo Japan)	All.
Nachi-Fujikoshi Corp. (Nachi)	Ball and Cylindrical.
Nakai Bearing	Ball
Nankai Seiko	Ball.
Nippon Pillow Block Sales Company, Ltd. (NPBS)	Ball.
NSK Ltd. (NSK)	Ball and Cylindrical.
NTN Corp. (NTN)	All.
Osaka Pump	Ball.
Takeshita Seiko (Takeshita)	Ball.
Tottori Yamakai (KYK)	Ball.
Tsubaki-Nakashima Co., Ltd. (formerly Tsubakimoto Precision) (Tsubaki)	Ball.
Romania	
Tehnoimportexport, S.A. (TIE)	Ball.
S.C. Koyo Romania S.A. (Koyo Romania)	Ball.
Singapore	
NMB Singapore Ltd./Pelmec Industries (Pte.) Ltd. (NMB/Pelmec)	Ball.
Sweden	
SKF Sverige (including all relevant affiliates) (SKF Sweden)	Ball and Cylindrical.
United Kingdom	
Barden Corporation (Barden)	Ball.
FAG (U.K.) Ltd. (FAG UK)	Ball and Cylindrical.
SNFA (U.K.) Bearings Ltd. (including all relevant affiliates) (SNFA UK)	Ball.
Societe Nouvelle de Roulements (SNR UK)	Ball.

In addition to the above, we have deferred initiation of administrative review of BBs from Japan that are produced by Muro Corporation (Muro). Muro requested deferral of the review pursuant to 19 CFR 351.213(c), and there were no objections to the deferral, in accordance with 19 CFR 351.213(c)(1)(ii).

Verification

As provided in section 782(i) of the Act, we verified information provided by certain respondents using standard verification procedures, including on-site inspection of the manufacturers' facilities, the examination of relevant sales and financial records, and selection of original documentation containing relevant information. Our verification results are outlined in the public versions of the verification reports, which are on file in the CRU, Room B–099.

Use of Facts Available

In accordance with section 776(a) of the Act, we preliminarily determine that the use of facts available as the basis for the weighted-average dumping margin is appropriate for KYK with respect to BBs. This company did not respond to

our antidumping questionnaire fully and, consequently, we find that it has not provided ''information that has been requested by the administering authority.'' However, a third party has submitted information that indicates that KYK is in bankruptcy and is therefore unable to respond to the questionnaire fully. For this reason, we have preliminarily determined not to make an inference that is adverse to KYK's interest. Instead, we have used the average calculated margin for all of the Japanese firms involved in this administrative review of BBs from Japan (see Memorandum from Laurie Parkhill to Richard W. Moreland, dated March 29, 2000, and on file in the CRU, Room B–099). To substantiate the bankruptcy of this firm further, we are requesting assistance from the U.S. embassy in Tokyo. We will examine this matter further between our preliminary and final results of review and, if we are unable to confirm that the firm is in bankruptcy, we will reconsider our decision that KYK is unable to respond to the questionnaire fully.

We preliminarily determine that, in accordance with section 776(a) of the Act, the use of facts available as the basis for the weighted-average dumping margin is appropriate for Osaka Pump with respect to BBs. After reviewing the information submitted by Osaka Pump in response to our requests and after documenting our findings at verification in our report, we have concluded that the information we received from the company was not usable because it was too incomplete to serve as the basis for calculating a dumping margin; hence, we have determined that the use of facts available is warranted for Osaka Pump. At verification we found numerous deficiencies and discrepancies with the response. For example, the company had not reported its U.S. and home-market sales correctly, resulting in the omission of sales in both markets. In addition, we found numerous transaction-specific errors which undermine the reliability of the response as a whole. We explain and elaborate on these and numerous other findings in our verification report dated February 2, 2000, and on file in the CRU, Room B–099.

As a result of Osaka Pump's failed verification, we have determined to apply facts available consistent with section 776(a)(2)(D) of the Act. In light of the factors we considered in making an adverse facts-available determination in the 1994/1995 reviews of these proceedings, we have determined that making an adverse inference in applying facts available is appropriate. See *Antifriction Bearings (Other Than Tapered Roller Bearings) and Parts Thereof from France, Germany, Italy, Japan, Romania, Sweden and the United Kingdom; Final Results of Antidumping Duty Administrative Reviews,* 62 FR 2081, 2088 (Jan. 15, 1997). First, Osaka Pump participated in the first three reviews of the order on BBs which indicates that it has experience with an antidumping proceeding. Second, Osaka Pump was in control of the data because the data was contained in its records. Therefore, we have concluded that Osaka Pump did not cooperate to the best of its ability.

In accordance with section 776(b) of the Act, we are making an adverse inference in our application of the facts available. As adverse facts available we have applied the highest rate we have calculated for companies under review for this segment of the proceeding. This represents an adverse rate but is not the highest rate ever determined in this proceeding. Therefore, we have preliminarily determined to apply 18.49 percent, a rate we determined for Takeshita for this period, to Osaka Pump's exports to the United States during the POR. We discuss the corroboration of this rate below.

We have found it necessary to use partial facts available in one instance. In this instance, we were unable to use a portion of a response in calculating the dumping margin. For TIE, we discovered a few (less than one percent) unreported transactions at verification. We have preliminarily determined that these unreported transactions constituted a failure by TIE to report all sales. Therefore, we have preliminarily applied adverse partial facts available to these transactions. As adverse partial facts available, we have used the weighted-average dumping margin of 39.61 percent, a rate we calculated for TIE in the original less-than-fair-value (LTFV) investigation. For a discussion of our determination with respect to this matter, see Memorandum from Suzanne Brower to Laurie Parkhill, dated March 28, 2000, and on file in the CRU, Room B–009.

Section 776(c) of the Act provides that the Department shall, to the extent practicable, corroborate secondary information used for facts available by reviewing independent sources reasonably at its disposal. Information from a prior segment of the proceeding or from another company in the same proceeding, such as that we are using here for Osaka Pump and TIE, constitutes secondary information. The Statement of Administrative Action accompanying the URAA, H.R. Doc. 316, Vol. 1, 103d Cong. (1994) (SAA), provides that to ''corroborate'' means simply that the Department will satisfy itself that the secondary information to be used has probative value. SAA at 870. As explained in *Tapered Roller Bearings and Parts Thereof, Finished and Unfinished, from Japan, and Tapered Roller Bearings, Four Inches or Less in Outside Diameter, and Components Thereof, from Japan; Preliminary Results of Antidumping Duty Administrative Reviews and Partial Termination of Administrative Reviews,* 61 FR 57391, 57392 (Nov. 6, 1996), to corroborate secondary information, the Department will examine, to the extent practicable, the reliability and relevance of the information used.

Unlike other types of information, such as input costs or selling expenses, there are no independent sources from which the Department can derive calculated dumping margins; the only source for margins is administrative determinations. In an administrative review, if the Department chooses as total adverse facts available a calculated dumping margin from a prior segment of the proceeding or from the same segment of the proceeding, it is not necessary to question the reliability of the margin for that time period.

With respect to the relevance aspect of corroboration, however, the Department will consider information reasonably at its disposal as to whether there are circumstances that would render a margin not relevant. Where circumstances indicate that the selected margin is not appropriate as adverse facts available, the Department will disregard the margin and determine an appropriate margin (see *Fresh Cut Flowers from Mexico; Final Results of Antidumping Duty Administrative Review,* 61 FR 6812 (Feb. 22, 1996), where the Department disregarded the highest dumping margin as best information available because the margin was based on another company's uncharacteristic business expense resulting in an unusually high margin). There is no evidence of circumstances indicating that the margin we are using as facts available in this review are not appropriate. Therefore, the requirements of section 776(c) of the Act are satisfied.

Intent To Revoke and Intent Not To Revoke

On May 28, 1999, four of the companies taking part in these reviews submitted requests for the revocation, in part, of an antidumping duty order. Torrington requested the revocation of the order covering CRBs from Germany as it pertained to its sales of these bearings. Somecat/SNFA requested the revocation of the order covering BBs

from Italy as it pertained to its sales of these bearings. TIE requested the revocation of the order covering BBs from Romania as it pertained to the export of these bearings by TIE. Finally, SNFA France requested the revocation of the order covering BBs from France as it pertained to its sales of these bearings.

Under section 751 of the Act, the Department ''may revoke, in whole or in part'' an antidumping duty order upon completion of a review. Although Congress has not specified the procedures that the Department must follow in revoking an order, the Department has developed a procedure for revocation that is set forth under 19 CFR 351.222. Under subsection 351.222(b)(2), the Department may revoke an antidumping duty order in part if it concludes that: (1) The company in question has sold the subject merchandise at not less than normal value for a period of at least three consecutive years; (2) it is not likely that the company will in the future sell the subject merchandise at less than normal value; and (3) the company has agreed to immediate reinstatement in the order if the Department concludes that the company, subsequent to the revocation, sold the subject merchandise at less than normal value. Subsection 351.222(b)(3) states that, in the case of an exporter that is not the producer of subject merchandise, the Department normally will revoke an order in part under subsection 351.222(b)(2) only with respect to subject merchandise produced or supplied by those companies that supplied the exporter during the time period that formed the basis for the revocation.

A request for revocation of an order in part must be accompanied by three elements. The company requesting revocation must do so in writing and submit the following statements with the request: (1) The company's certification that it sold the subject merchandise at not less than normal value during the current review period and that, in the future, it will not sell at less than normal value; (2) the company's certification that, during each of the three years forming the basis of the request, it sold the subject merchandise to the United States in commercial quantities; (3) the agreement to reinstatement in the order if the Department concludes that the company, subsequent to revocation, has sold the subject merchandise at less than normal value. See 19 CFR 351.222(e)(1).

Torrington has met the first and third criteria under subsection 351.222(e)(1); however, it did not submit a certification regarding the selling of subject merchandise in commercial quantities during the three years forming the basis of the request. Thus, its request is incomplete. In addition, as a result of our preliminary margin calculations, Torrington had sales of CRBs below normal value during the current review period (see *Preliminary Results* below). Therefore, even if Torrington had submitted a complete request, it would not have satisfied the criterion under subsection 351.222(b)(2)(i) and we would have determined not to revoke the order as requested.

The request from Somecat/SNFA meets all of the criteria under subsection 351.222(e)(1). However, as with Torrington above, this company had sales of the subject merchandise to which its request pertains below normal value during the current review period (see *Preliminary Results* below). Thus, it does not meet the criterion under subsection 351.222(b)(2)(i) and we do not intend to revoke the order, in part, on BBs from Italy.

TIE's request meets all of the criteria under subsection 351.222(e)(1). Thus, our analysis turns to whether this company can satisfy the criteria of subsection 351.222(b)(2). The Department first examines whether the requesting company sold the subject merchandise at not less than normal value to the United States in commercial quantities for three consecutive reviews. It then examines whether it is likely that the company would in the future sell the subject merchandise at less than normal value.

Our preliminary margin calculations listed below show that TIE did not sell BBs at less than normal value during the current review period. Furthermore, TIE did not sell the subject merchandise at less than normal value in the two previous consecutive administrative review periods. See *AFBs 9* and *Antifriction Bearings (Other Than Tapered Roller Bearings) and Parts Thereof from France, Germany, Italy, Japan, Romania, Sweden and the United Kingdom; Final Results of Antidumping Duty Administrative Reviews,* 63 FR 33320 (June 18, 1998) (AFBs 8). Thus, we preliminarily find that TIE had zero or *de minimis* dumping margins for three consecutive reviews.

Second, based upon three consecutive reviews of zero or *de minimis* margins and in the absence of any other evidence on likelihood, the Department preliminarily determines that dumping is not likely to resume.

Therefore, based on our findings and in accordance with subsection 351.222(b)(3), we preliminarily intend to revoke the antidumping duty order covering BBs from Romania as it pertains to TIE's sales of merchandise from those suppliers which supplied TIE during the time period that formed the basis for the revocation. TIE has requested business proprietary treatment of the names of its suppliers. For a list of the suppliers to which this revocation applies, please see Memorandum from Suzanne Brower to the File, dated March 27, 2000. If these preliminary findings are affirmed in our final results, we will revoke this order, in part, and, in accordance with 19 CFR 351.222(f)(3), we will terminate the suspension of liquidation for any BBs from Romania that are produced by the specific suppliers and exported by TIE entered, or withdrawn from warehouse, for consumption on or after May 1, 1999, and will instruct Customs to refund any cash deposits for such entries.

The request from SNFA France meets all of the criteria under subsection 351.222(e)(1). With regard to the criteria of subsection 351.222(b)(2), our preliminary margin calculations show that SNFA France sold BBs at not less than normal value during the current review period (see rate below). In addition, SNFA France sold the subject merchandise at not less than normal value in the two previous consecutive administrative reviews. See *AFBs 9* and *AFBs 8.* Thus, we preliminarily find that SNFA France had zero or *de minimis* dumping margins for three consecutive reviews. As in the case of TIE, we preliminarily determine that dumping is not likely to resume based upon the three consecutive reviews of zero or *de minimis* margins and in the absence of any other evidence on likelihood.

Therefore, we preliminarily intend to revoke the antidumping duty order covering BBs from France as it pertains to the sales of these bearings by SNFA France. If these preliminary findings are affirmed in our final results, we will revoke this order, in part, and, in accordance with 19 CFR 351.222(f)(3), we will terminate the suspension of liquidation for any BBs from France that are exported by SNFA France entered, or withdrawn from warehouse, for consumption on or after May 1, 1999, and will instruct Customs to refund any cash deposits for such entries.

Export Price and Constructed Export Price—Market-Economy Countries

For the price to the United States, we used export price or constructed export price (CEP) as defined in sections 772(a)

and (b) of the Act, as appropriate. Due to the extremely large volume of transactions that occurred during the POR and the resulting administrative burden involved in calculating individual margins for all of these transactions, we sampled CEP sales in accordance with section 777A of the Act. When a firm made more than 2,000 CEP sales transactions to the United States for merchandise subject to a particular order, we reviewed CEP sales that occurred during sample weeks. We selected one week from each two-month period in the review period, for a total of six weeks, and analyzed each transaction made in those six weeks. The sample weeks are as follows: May 10–16, 1998; August 9–15, 1998; October 4–10, 1998; December 27, 1998-January 2, 1999; January 24–30, 1999; March 21–27, 1999. We reviewed all export-price sales transactions during the POR.

We calculated export price and CEP based on the packed f.o.b., c.i.f., or delivered price to unaffiliated purchasers in, or for exportation to, the United States. We made deductions, as appropriate, for discounts and rebates. We also made deductions for any movement expenses in accordance with section 772(c)(2)(A) of the Act.

In accordance with section 772(d)(1) of the Act and the Statement of Administrative Action (SAA) accompanying the URAA (at 823–824), we calculated the CEP by deducting selling expenses associated with economic activities occurring in the United States, including commissions, direct selling expenses, indirect selling expenses, and repacking expenses in the United States. When appropriate, in accordance with section 772(d)(2) of the Act, we also deducted the cost of any further manufacture or assembly, except where we applied the special rule provided in section 772(e) of the Act (see below). Finally, we made an adjustment for profit allocated to these expenses in accordance with section 772(d)(3) of the Act.

With respect to subject merchandise to which value was added in the United States prior to sale to unaffiliated U.S. customers, *e.g.*, parts of bearings that were imported by U.S. affiliates of foreign exporters and then further processed into other products which were then sold to unaffiliated parties, we determined that the special rule for merchandise with value added after importation under section 772(e) of the Act applied to all firms, except IKS and NPBS, that added value in the United States.

Section 772(e) of the Act provides that, when the subject merchandise is imported by an affiliated person and the value added in the United States by the affiliated person is likely to exceed substantially the value of the subject merchandise, we shall determine the CEP for such merchandise using the price of identical or other subject merchandise if there is a sufficient quantity of sales to provide a reasonable basis for comparison and we determine that the use of such sales is appropriate. If there is not a sufficient quantity of such sales or if we determine that using the price of identical or other subject merchandise is not appropriate, we may use any other reasonable basis to determine the CEP.

To determine whether the value added is likely to exceed substantially the value of the subject merchandise, we estimated the value added based on the difference between the averages of the prices charged to the first unaffiliated purchaser for the merchandise as sold in the United States and the averages of the prices paid for the subject merchandise by the affiliated purchaser. Based on this analysis, we determined that the estimated value added in the United States by all firms, with the exception of IKS and NPBS, accounted for at least 65 percent of the price charged to the first unaffiliated customer for the merchandise as sold in the United States. (See 19 CFR 351.402(c) for an explanation of our practice on this issue.) Therefore, we preliminarily determine that the value added is likely to exceed substantially the value of the subject merchandise. Also, for the companies in question, we determine that there was a sufficient quantity of sales remaining to provide a reasonable basis for comparison and that the use of these sales are appropriate. Accordingly, for purposes of determining dumping margins for the sales subject to the special rule, we have used the weighted-average dumping margins calculated on sales of identical or other subject merchandise sold to unaffiliated persons.

For IKS and NPBS, we determined that the special rule did not apply because the value added in the United States did not exceed substantially the value of the subject merchandise. Consequently, IKS and NPBS submitted complete section E responses which included the costs of the further processing performed by its U.S. affiliate. Since the majority of the IKS's and NPBS's products sold in the United States were further processed, we analyzed all sales. No other adjustments to export price or CEP were claimed or allowed.

Normal Value—Market-Economy Countries

Based on a comparison of the aggregate quantity of home-market and U.S. sales and absent any information that a particular market situation in the exporting country did not permit a proper comparison, we determined that the quantity of foreign like product sold by all respondents in the exporting country was sufficient to permit a proper comparison with the sales of the subject merchandise to the United States, pursuant to section 773(a) of the Act. Each company's quantity of sales in its home market was greater than five percent of its sales to the U.S. market. Therefore, in accordance with section 773(a)(1)(B)(i) of the Act, we based normal value on the prices at which the foreign like products were first sold for consumption in the exporting country. With respect to MPT and Takeshita, normal value was based on constructed value because the merchandise sold in the United States was not comparable to the merchandise sold in the home market during the POR.

Due to the extremely large number of transactions that occurred during the POR and the resulting administrative burden involved in examining all of these transactions, we sampled sales to calculate normal value in accordance with section 777A of the Act. When a firm had more than 2,000 home-market sales transactions on an order-specific basis, we used sales in sample months that corresponded to the sample weeks that we selected for U.S. CEP sales, sales in the one month prior to the POR, and sales in the month following the POR. The sample months were February, May, August, October, and December of 1998 and January, March, and May of 1999.

We used sales to affiliated customers only where we determined such sales were made at arm's-length prices, *i.e.*, at prices comparable to prices at which the firm sold identical merchandise to unaffiliated customers.

Because we disregarded below-cost sales in accordance with section 773(b) of the Act in the last completed review with respect to SKF France (BBs), SNR France (BBs), INA (all), SKF Germany (all), FAG Germany (BBs, CRBs), FAG Italy (BBs), SKF Italy (BBs), SKF Sweden (BBs), Koyo (BBs), Nachi (BBs, CRBs), NPBS (BBs), NSK (BBs, CRBs), NTN Japan (all), and Barden U.K. (BBs), we had reasonable grounds to believe or suspect that sales of the foreign like product under consideration for the determination of normal value in these reviews may have been made at prices below the cost of production (COP) as

provided by section 773(b)(2)(A)(ii) of the Act. Therefore, pursuant to section 773(b)(1) of the Act, we initiated COP investigations of sales by these firms in the home market.

On September 20, 1999, the Department received allegations from SKF USA Inc. and INA USA Corporation that Torrington sold CRBs in Germany at prices below the COP. The parties requested that the Department initiate a cost investigation of Torrington's home-market sales of CRBs. Based on our analysis of the sales-below-cost allegations submitted by SKF USA Inc. and INA USA Corporation, we determined that the allegations provided reasonable grounds to believe or suspect that Torrington's home-market sales were made at prices below their COP. Therefore, we initiated an investigation of sales below COP for Torrington. See Memorandum to Richard W. Moreland, Request to Initiate Cost Investigation for Respondent Torrington Nadellager, October 25, 1999, on file in the CRU, Room B–099.

In accordance with section 773(b)(3) of the Act, we calculated the COP based on the sum of the costs of materials and fabrication employed in producing the foreign like product, the selling, general and administrative (SG&A) expenses, and all costs and expenses incidental to packing the merchandise. In our COP analysis, we used the home-market sales and COP information provided by each respondent in its questionnaire responses. We did not conduct a COP analysis regarding merchandise subject to an antidumping duty order in instances where a respondent reported no U.S. sales or shipments of merchandise subject to that order.

After calculating the COP, in accordance with section 773(b)(1) of the Act, we tested whether home-market sales of AFBs were made at prices below the COP within an extended period of time in substantial quantities and whether such prices permitted the recovery of all costs within a reasonable period of time. We compared model-specific COPs to the reported home-market prices less any applicable movement charges, discounts, and rebates.

Pursuant to section 773(b)(2)(C) of the Act, when less than 20 percent of a respondent's sales of a given product were at prices less than the COP, we did not disregard any below-cost sales of that product because the below-cost sales were not made in substantial quantities within an extended period of time. When 20 percent or more of a respondent's sales of a given product during the POR were at prices less than the COP, we disregarded the below-cost sales because they were made in substantial quantities within an extended period of time pursuant to sections 773(b)(2)(B) and (C) of the Act and because, based on comparisons of prices to weighted-average COPs for the POR, we determined that these sales were at prices which would not permit recovery of all costs within a reasonable period of time in accordance with section 773(b)(2)(D) of the Act. Based on this test, we disregarded below-cost sales with respect to all of the above-mentioned companies and indicated merchandise except where there were no sales or shipments subject to review.

We compared U.S. sales with sales of the foreign like product in the home market. We considered all non-identical products within a bearing family to be equally similar. As defined in the questionnaire, a bearing family consists of all bearings which are the foreign like product that are the same in the following physical characteristics: load direction, bearing design, number of rows of rolling elements, precision rating, dynamic load rating, outer diameter, inner diameter, and width.

Home-market prices were based on the packed, ex-factory or delivered prices to affiliated or unaffiliated purchasers. When applicable, we made adjustments for differences in packing and for movement expenses in accordance with sections 773(a)(6)(A) and (B) of the Act. We also made adjustments for differences in cost attributable to differences in physical characteristics of the merchandise pursuant to section 773(a)(6)(C)(ii) of the Act and for differences in circumstances of sale (COS) in accordance with section 773(a)(6)(C)(iii) of the Act and 19 CFR 351.410. For comparisons to export price, we made COS adjustments by deducting home-market direct selling expenses from and adding U.S. direct selling expenses to normal value. For comparisons to CEP, we made COS adjustments by deducting home-market direct selling expenses from normal value. We also made adjustments, when applicable, for home-market indirect selling expenses to offset U.S. commissions in export-price and CEP calculations.

In accordance with section 773(a)(1)(B)(i) of the Act, we based normal value, to the extent practicable, on sales at the same level of trade as the export price or CEP. If normal value was calculated at a different level of trade, we made an adjustment, if appropriate and if possible, in accordance with section 773(a)(7) of the Act. (See Level of Trade section below.)

In accordance with section 773(a)(4) of the Act, we used constructed value as the basis for normal value when there were no usable sales of the foreign like product in the comparison market. We calculated constructed value in accordance with section 773(e) of the Act. We included the cost of materials and fabrication, SG&A expenses, and profit in the calculation of constructed value. In accordance with section 773(e)(2)(A) of the Act, we based SG&A expenses and profit on the amounts incurred and realized by each respondent in connection with the production and sale of the foreign like product in the ordinary course of trade for consumption in the home market.

When appropriate, we made adjustments to constructed value in accordance with section 773(a)(8) of the Act and 19 CFR 351.410 for COS differences and level-of-trade differences. For comparisons to export price, we made COS adjustments by deducting home-market direct selling expenses from and adding U.S. direct selling expenses to normal value. For comparisons to CEP, we made COS adjustments by deducting home-market direct selling expenses from normal value. We also made adjustments, when applicable, for home-market indirect selling expenses to offset U.S. commissions in export-price and CEP comparisons.

When possible, we calculated constructed value at the same level of trade as the export price or CEP. If constructed value was calculated at a different level of trade, we made an adjustment, if appropriate and if possible, in accordance with sections 773(a)(7) and (8) of the Act. (See *Level of Trade* section below.)

Level of Trade

To the extent practicable, we determined normal value for sales at the same level of trade as the U.S. sales (either export price or CEP). When there were no sales at the same level of trade, we compared U.S. sales to home-market sales at a different level of trade. The normal-value level of trade is that of the starting-price sales in the home market. When normal value is based on constructed value, the level of trade is that of the sales from which we derived SG&A and profit.

To determine whether home-market sales are at a different level of trade than U.S. sales, we examined stages in the marketing process and selling functions along the chain of distribution between the producer and the unaffiliated customer. If the comparison-market sales were at a different level of trade from that of a U.S. sale and the

difference affected price comparability, as manifested in a pattern of consistent price differences between the sales on which normal value is based and comparison-market sales at the level of trade of the export transaction, we made a level-of-trade adjustment under section 773(a)(7)(A) of the Act. See *Notice of Final Determination of Sales at Less Than Fair Value: Certain Cut-to-Length Carbon Steel Plate from South Africa,* 62 FR 61731 (November 19, 1997).

For a company-specific description of our level-of-trade analysis for these preliminary results, see Memorandum to Laurie Parkhill from Antifriction Bearings Team regarding Level of Trade, dated March 27, 2000, and on file in the CRU, Room B–099.

Methodology for Romania

Separate Rates

It is the Department's policy to assign all exporters of subject merchandise subject to review in a non-market-economy (NME) country a single rate unless an exporter can demonstrate that it is sufficiently independent to be entitled to a separate rate. For purposes of this ''separate rates'' inquiry, the Department analyzes each exporting entity under the test established in the *Final Determination of Sales at Less Than Fair Value: Sparklers from the People's Republic of China,* 56 FR 20588 (May 6, 1991) (*Sparklers*), as amplified in *Final Determination of Sales at Less Than Fair Value: Silicon Carbide from the People's Republic of China,* 59 FR 22585 (May 2, 1994) (*Silicon Carbide*). Under this test, exporters in NME countries are entitled to separate, company-specific margins when they can demonstrate an absence of government control over exports, both in law (*de jure*) and in fact (*de facto*).

Evidence supporting, though not requiring, a finding of *de jure* absence of government control includes the following: (1) An absence of restrictive stipulations associated with an individual exporter's business and export licenses; (2) any legislative enactments decentralizing control of companies; and (3) any other formal measures by the government decentralizing control of companies.

De facto absence of government control with respect to exports is based on the following four criteria: (1) Whether the export prices are set by or subject to the approval of a government authority; (2) whether each exporter retains the proceeds from its sales and makes independent decisions regarding the disposition of profits or financing of losses; (3) whether each exporter has autonomy in making decisions regarding the selection of management; (4) whether each exporter has the authority to negotiate and sign contracts. (*See Silicon Carbide,* 59 FR at 22587.)

We have determined that the evidence of record demonstrates an absence of government control, both in law and in fact, with respect to exports by TIE and Koyo Romania according to the criteria identified in *Sparklers* and *Silicon Carbide.* For a discussion of the Department's preliminary determination that TIE and Koyo Romania are entitled to a separate rate, see Memorandum from Suzanne Brower to Laurie Parkhill, Assignment of Separate Rate for Tehnoimportexport: 1998–99 Administrative Review of the Antidumping Duty Order on Antifriction Bearings (Other Than Tapered Roller Bearings) and Parts Thereof From Romania, dated February 25, 2000, and Memorandum from J. David Dirstine to Laurie Parkhill, Assignment of Separate Rate for S.C. Koyo Romania S.A.: 1998–99 Administrative Review of the Antidumping Duty Order on Antifriction Bearings (Other Than Tapered Roller Bearings) and Parts Thereof From Romania, dated February 23, 2000, which are on file in the CRU, Room B–099. Since TIE and Koyo Romania are preliminarily entitled to separate rates and are the only Romanian firms for which administrative reviews have been requested, it is not necessary for us to review any other Romanian exporters of subject merchandise.

Export Price—Romania

For sales made by TIE, we based our margin calculation on export price as defined in section 772(a) of the Act because the subject merchandise was first sold before the date of importation by the exporter of the subject merchandise outside of the United States to unaffiliated purchasers in the United States.

We calculated export price based on the packed price to unaffiliated purchasers in the United States. We made deductions from the price used to establish export price, where appropriate, for foreign inland freight, international freight, and U.S. brokerage and handling. To value foreign inland freight we used the freight rates listed in the attachment to the Memorandum from Suzanne Brower and J. David Dirstine to Laurie Parkhill, Antidumping Duty Order Administrative Review of Antifriction Bearings (Other Than Tapered Roller Bearings) and Parts Thereof from Romania: Selection of the Surrogate Country in the 1998/99 Review (Surrogate-Country Memo), dated March 27, 2000, which is on file in the CRU, Room B–099. We used the actual reported expenses for international freight and U.S. brokerage and handling because the expenses were paid to market-economy suppliers and incurred in market-economy currencies.

Constructed Export Price—Romania

For sales made by Koyo Romania, we used CEP as defined in sections 772(b) of the Act. We used the actual reported expenses for international freight because the expenses were paid to market-economy suppliers and incurred in market-economy currencies. No other adjustments were claimed or allowed.

Normal Value—Romania

For merchandise exported from a NME country, section 773(c)(1) of the Act provides that the Department shall determine normal value using a factors-of-production methodology if available information does not permit the calculation of normal value using home-market or third-country prices under section 773(a) of the Act. In every investigation or review we have conducted involving Romania, we have treated Romania as a NME country. None of the parties to this proceeding has contested such treatment in this review and, therefore, we have maintained our treatment of Romania as an NME country for these preliminary results.

Accordingly, we calculated normal value in accordance with section 773(c) of the Act and 19 CFR 351.408. In accordance with section 773(c)(3) of the Act, the factors of production used in producing AFBs include, but are not limited to, hours of labor required, quantities of raw materials employed, amounts of energy and other utilities consumed, and representative capital cost, including depreciation.

In accordance with section 773(c)(4) of the Act, the Department valued the factors of production, to the extent possible, using the prices or costs of factors of production in market-economy countries which are at a level of economic development comparable to that of Romania and which are significant producers of comparable merchandise. We determined that Indonesia is at a level of economic development comparable to that of Romania. We also found that Indonesia is a producer of bearings. Therefore, we have selected Indonesia as the primary surrogate country. For a further discussion of the Department's selection

of surrogate countries, see the Surrogate-Country Memo.

For purposes of calculating normal value, we valued the Romanian factors of production as follows:

• Where direct materials used to produce AFBs were imported by the producers from market-economy countries, we used the import price to value the material input. To value all other direct materials used in the production of AFBs, *i.e.,* those which were sourced from within Romania, we used the import value per metric ton of these materials into Indonesia as published in the 1998 *United Nations Trade Commodity Statistics (UNTCS),* which includes the most recent published data closest to the months during the POR. We made adjustments to include freight costs incurred between the domestic suppliers and the AFB factories, using freight rates obtained from public documents attached to the Surrogate-Country Memo. We also reduced the steel-input factors to account for the scrap steel that was sold by the producers of the subject merchandise.

• For labor, section 351.408(c)(3) of the Department's regulations requires the use of a regression-based wage rate. We have used the regression-based wage rate on Import Administration's internet website at *www.ita.doc.gov/import admin/records/wages.*

• For energy, we used 1997 electricity rates, as adjusted, for Indonesia reported in the publication Energy, Prices and Taxes (2nd Quarter 1999). We based the value of natural gas on 1998 Indonesian prices as reported in Energy, Prices and Taxes (2nd Quarter 1999). See *Notice of Preliminary Determination of Sales at Less Than Fair Value and Postponement of Final Determination: Certain Small Diameter Carbon and Alloy Seamless Standard, Line and Pressure Pipe From Romania,* 65 FR 5594, 5599 (February 4, 2000) (*Steel Pipe*).

• For factory overhead, SG&A expenses, and profit, we could not find values for the bearings industry in Indonesia. Therefore, consistent with *Steel Pipe,* we used surrogate data from one or more of the 1997 financial statements of the following Indonesian companies: P.T. Jaya Pari Steel Ltd. Corporation, P.T. Jakarta Kyoei, and P.T. Krakatau. See attachments to the Surrogate-Country Memo for selected sources for valuing overhead, SG&A expenses, profit, and energy.

• To value packing materials, where materials used to package AFBs were imported into Romania from market-economy countries, we used the import price. To value all other packing materials, *i.e.,* those sourced from within Romania, we used the import value per metric ton of these materials as published in the *U.N. Commodity Statistics 1998.* We adjusted these values to include freight costs incurred between the domestic suppliers and the AFB factories. To value freight costs, we used the sources used to value freight rates in Steel Pipe. For example, to value truck freight, we used an August 2, 1999, quote from P.T. Batam Samudra Transportation Company in Jakarta. In addition, to value rail rates, we used a December 1994 cable from the American Embassy in Jakarta, Indonesia. See attachment to the Surrogate-Country Memo.

Preliminary Results of Reviews

As a result of our reviews, we preliminarily determine the following weighted-average dumping margins (in percent) for the period May 1, 1998, through April 30, 1999:

Company	Ball	Cylindrical	Spherical plain
France			
SKF	11.43	(2)	14.83
SNFA	0.00	0.06	(3)
SNR	0.39	0.22	(3)
Germany			
FAG	7.22	8.16	(3)
INA	18.56	4.42	0.44
MPT	(3)	0.00	(3)
Paul Muller	0.00	(3)	(3)
SKF	6.39	7.79	5.02
SNR	5.92	2.46	(3)
Torrington Nadellager	(2)	61.60	(2)
Italy			
FAG	2.04	1.24	.....
SKF	4.81	(3)	.....
Somecat	5.26	(2)	.....
Japan			
Asahi Seiko	0.68	(3)	(3)
IJK	13.96	(3)	(3)
IKS	9.99	(3)	(3)
Koyo	5.39	0.92	0.00
KYK	6.49	(3)	(3)
Nachi	4.61	1.31	(3)
Nakai Bearing	4.55	(3)	(3)
Nankai Seiko	0.33	(3)	(3)
NPBS	2.53	(3)	(3)
NSK Ltd.	3.08	2.31	(3)
NTN	4.59	3.39	2.59
Osaka Pump	18.49	(3)	(3)
Takeshita	18.49	(3)	(3)

Company	Ball	Cylindrical	Spherical plain
Tsubaki	9.72	(3)	(3)
Romania			
Koyo	0.00		
TIE	0.11		
Singapore			
NMB/Pelmec	1.26		
Sweden			
SKF	2.50	(1)	
United Kingdom			
Barden Corporation	2.78	(1)	
FAG (U.K.)	(1)	(1)	
SNFA	0.00	(3)	
SNR	0.22	(3)	

[1] No shipments or sales subject to this review. The deposit rate remains unchanged from the last relevant segment of the proceeding in which the firm had shipments/sales.
[2] No shipments or sales subject to this review. The firm has no individual rate from any segment of this proceeding and will continue to get the all-others deposit rate from the less-than-fair-value investigation.
[3] No request for review under section 751(a) of the Act.

Any interested party may request a hearing within 21 days of the date of publication of this notice. A general-issues hearing, if requested, and any hearings regarding issues related solely to specific countries, if requested, will be held in accordance with the following schedule and at the indicated locations in the main Commerce Department building:

Case	Date	Time	Room No.
General issues	May 15, 2000	9:00 a.m	1412
Sweden	May 16, 2000	9:00 a.m	1412
Romania	May 16, 2000	2:00 p.m	1412
Germany	May 17, 2000	9:00 a.m	1412
Italy	May 18, 2000	9:00 a.m	1412
Singapore	May 18, 2000	2:00 p.m	1412
United Kingdom	May 19, 2000	9:00 a.m	1412
France	May 19, 2000	2:00 p.m	1412
Japan	May 22, 2000	9:00 a.m	B–841A

Issues raised in hearings will be limited to those raised in the respective case and rebuttal briefs. Case briefs from interested parties and rebuttal briefs, limited to the issues raised in the respective case briefs, may be submitted not later than the dates shown below for general issues and the respective country-specific cases. Parties who submit case or rebuttal briefs in these proceedings are requested to submit with each argument (1) A statement of the issue, and (2) a brief summary of the argument with an electronic version included.

Case	Briefs due	Rebuttals due
General Issues	May 4, 2000	May 11, 2000.
Sweden	May 5, 2000	May 12, 2000.
Romania	May 5, 2000	May 12, 2000.
Germany	May 8, 2000	May 15, 2000.
Italy	May 9, 2000	May 16, 2000.
Singapore	May 9, 2000	May 16, 2000.
United Kingdom	May 10, 2000	May 17, 2000.
France	May 10, 2000	May 17, 2000.
Japan	May 11, 2000	May 18, 2000.

The Department will publish the final results of these administrative reviews, including the results of its analysis of issues raised in any such written briefs or hearings. The Department will issue final results of these reviews within 120 days of publication of these preliminary results.

Assessment Rates

The Department shall determine, and the Customs Service shall assess, antidumping duties on all appropriate

entries. In accordance with 19 CFR 351.212(b)(1), we have calculated, whenever possible, an exporter/importer-specific assessment rate or value for subject merchandise.

Export Price Sales

With respect to export-price sales for these preliminary results, we divided the total dumping margins (calculated as the difference between normal value and export price) for each importer/customer by the total number of units sold to that importer/customer. We will direct the Customs Service to assess the resulting per-unit dollar amount against each unit of merchandise in each of that importer's/customer's entries under the relevant order during the review period.

Constructed Export Price Sales

For CEP sales (sampled and non-sampled), we divided the total dumping margins for the reviewed sales by the total entered value of those reviewed sales for each importer. When an affiliated party acts as an importer for export-price sales we have included the applicable export-price sales in this assessment-rate calculation. We will direct the Customs Service to assess the resulting percentage margin against the entered customs values for the subject merchandise on each of that importer's entries under the relevant order during the review period (see 19 CFR 351.212(a)).

Cash-Deposit Requirements

To calculate the cash-deposit rate for each respondent (*i.e.,* each exporter and/or manufacturer included in these reviews) we divided the total dumping margins for each company by the total net value for that company's sales of merchandise during the review period subject to each order.

In order to derive a single deposit rate for each order for each respondent, we weight-averaged the export price and CEP deposit rates (using the export price and CEP, respectively, as the weighting factors). To accomplish this when we sampled CEP sales, we first calculated the total dumping margins for all CEP sales during the review period by multiplying the sample CEP margins by the ratio of total days in the review period to days in the sample weeks. We then calculated a total net value for all CEP sales during the review period by multiplying the sample CEP total net value by the same ratio. Finally, we divided the combined total dumping margins for both export price and CEP sales by the combined total value for both export price and CEP sales to obtain the deposit rate.

Entries of parts incorporated into finished bearings before sales to an unaffiliated customer in the United States will receive the respondent's deposit rate applicable to the order.

Furthermore, the following deposit requirements will be effective upon publication of the notice of final results of administrative reviews for all shipments of AFBs entered, or withdrawn from warehouse, for consumption on or after the date of publication, as provided by section 751(a)(1) of the Act: (1) The cash-deposit rates for the reviewed companies will be the rates established in the final results of reviews; (2) for previously reviewed or investigated companies not listed above, the cash-deposit rate will continue to be the company-specific rate published for the most recent period; (3) if the exporter is not a firm covered in this review, a prior review, or the LTFV investigation, but the manufacturer is, the cash-deposit rate will be the rate established for the most recent period for the manufacturer of the merchandise; and (4) the cash-deposit rate for all other manufacturers or exporters will continue to be the ''All Others'' rate for the relevant order made effective by the final results of review published on July 26, 1993 (see *Antifriction Bearings (Other Than Tapered Roller Bearings) and Parts Thereof From France, et al: Final Results of Antidumping Duty Administrative Reviews and Revocation in Part of an Antidumping Duty Order,* 58 FR 39729 (July 26, 1993), and, for BBs from Italy, *see Antifriction Bearings (Other Than Tapered Roller Bearings) and Parts Thereof From France, et al: Final Results of Antidumping Duty Administrative Reviews, Partial Termination of Administrative Reviews,* and *Revocation in Part of Antidumping Duty Orders,* 61 FR 66472 (December 17, 1996)). These rates are the ''All Others'' rates from the relevant LTFV investigations.

These deposit requirements, when imposed, shall remain in effect until publication of the final results of the next administrative reviews.

This notice also serves as a reminder to importers of their responsibility under 19 CFR 351.402(f) to file a certificate regarding the reimbursement of antidumping duties prior to liquidation of the relevant entries during this review period. Failure to comply with this requirement could result in the Department's presumption that reimbursement of antidumping duties occurred and the subsequent assessment of doubled antidumping duties.

We are issuing and publishing this determination in accordance with sections 751(a)(1) and 777(i)(1) of the Act.

Dated: March 30, 2000.

Robert S. LaRussa,

Assistant Secretary for Import Administration.

[FR Doc. 00–8568 Filed 4–5–00; 8:45 am]

BILLING CODE 3510–DS–P

DEPARTMENT OF COMMERCE

International Trade Administration

[A–583–080]

Certain Carbon Steel Plate From Taiwan; Final Results of Antidumping Duty Expedited Sunset Review

AGENCY: Import Administration, International Trade Administration, Department of Commerce.

ACTION: Notice of final results of antidumping duty expedited sunset review: Certain carbon steel plate from Taiwan.

SUMMARY: On September 1, 1999, the Department of Commerce (''the Department'') published the notice of initiation of a sunset review of the antidumping finding on certain carbon steel plate from Taiwan. On the basis of a notice of intent to participate and adequate substantive comments filed on behalf of domestic interested parties and inadequate response (in this case, no response) from respondent interested parties, we determined to conduct an expedited review. Based on our analysis of the comments received, we find that revocation of the antidumping finding would be likely to lead to continuation or recurrence of dumping at the levels listed below in the section entitled ''Final Results of Review.''

EFFECTIVE DATE: April 6, 2000.

FOR FURTHER INFORMATION CONTACT: Mark D. Young, Import Administration, International Trade Administration, U.S. Department of Commerce, Washington, DC 20230; telephone: (202) 482–6397.

SUPPLEMENTARY INFORMATION:

Statute and Regulations

Unless otherwise indicated, all citations to the Tariff Act of 1930, as amended (''the Act''), are references to the provisions effective January 1, 1995, the effective date of the amendments made to the Act by Uruguay Round Agreements Act (''URAA''). In addition, unless otherwise indicated, all citations to the Department of Commerce's (''the Department's'') regulations are to 19

CFR part 351 (1999). Guidance on methodological or analytical issues relevant to the Department's conduct of sunset reviews is set forth in the Department's Policy Bulletin 98:3—Policies Regarding the Conduct of Five-year (''Sunset'') Reviews of Antidumping and Countervailing Duty Orders; Policy Bulletin, 63 FR 18871 (April 16, 1998) (''Sunset Policy Bulletin'').

Background

On September 1, 1999, the Department published the notice of initiation of the sunset review of the antidumping finding on carbon steel plate from Taiwan (64 FR 47767). The Department received Notices of Intent to Participate on behalf of Bethlehem Steel Corporation and U.S. Steel Group, a unit of USX Corporation (''the domestic interested parties''), within the deadline specified in section 351.218(d)(1)(i) of the Sunset Regulations. The domestic interested parties claimed interested party status under section 771(9)(C) of the Act, as U.S. manufacturers of carbon steel plate. We received a complete substantive response from the domestic interested parties on October 1, 1999, within the 30-day deadline specified in the Sunset Regulations under section 351.218(d)(3)(i). We did not receive a substantive response from any respondent interested party to this proceeding. As a result, pursuant to 751(c)(3)(B) of the Act and 19 CFR 351.218(e)(1)(ii)(C) of the Department's Regulations, the Department determined to conduct an expedited, 120-day, review of this finding.

In accordance with section 751(c)(5)(C)(v) of the Act, the Department may treat a review as extraordinarily complicated if it is a review of a transition order (*i.e.,* an order in effect on January 1, 1995). The review at issue concerns a transition order within the meaning of section 751(c)(6)(C)(ii) of the Act. Therefore, the Department determined that the sunset review of the antidumping finding on carbon steel plate from Taiwan is extraordinarily complicated and extended the time limit for completion of the final results of this review until not later than March 29, 2000, in accordance with section 751(c)(5)(B) of the Act.[1]

Scope of Review

The imports covered by this antidumping finding are shipments of hot-rolled carbon steel plate, 0.1875 inch or more in thickness, over eight inches in width, not in coils, not pickled, not coated, or plated with metal, not clad, nor pressed or stamped to non-rectangular shape. Such merchandise was classifiable under Tariff Schedules of the United States Annotated item number 607.6615. These imports are currently classifiable under the Harmonized Tariff Schedule of the United States (''HTSUS'') item numbers 7208.40.3030, 7208.40.3060,7208.51.0030, 7208.51.0045, 7208.51.0060, 7208.52.0000, 7211.13.0000, 7211.14.0030, and 7211.14.0045. The HTSUS item numbers are provided for convenience and customs purposes. The Department's written description remains dispositive.

There were no scope rulings pertaining to this finding. This review covers all imports from all manufacturers and exporters of carbon steel plate from Taiwan.

Analysis of Comments Received

All issues raised in this case by parties to this sunset review are addressed in the ''Issues and Decision Memorandum'' (''Decision Memo'') from Jeffrey A. May, Director, Office of Policy, Import Administration, to Robert S. LaRussa, Assistant Secretary for Import Administration, dated March 29, 2000, which is hereby adopted by this notice. The issues discussed in the Decision Memo include the likelihood of continuation or recurrence of dumping and the magnitude of the margin likely to prevail were the finding revoked. Parties can find a complete discussion of all issues raised in this review and the corresponding recommendations in this public memorandum, which is on file in room B–099 of the main Commerce Building.

In addition, a complete version of the Decision Memo can be accessed directly on the Web at www.ita.doc.gov/import_admin/records/frn/. The paper copy and electronic version of the Decision Memo are identical in content.

Final Results of Reviews

We determine that revocation of the antidumping finding on carbon steel plate from Taiwan would be likely to lead to continuation or recurrence of dumping at the following percentage weighted-average margins:

Manufacturers/exporters	Margin (percent)
China Steel Corporation	34.00
All Others	34.00

This notice also serves as the only reminder to parties subject to administrative protective orders (''APO'') of their responsibility concerning the return or destruction of proprietary information disclosed under APO in accordance with 19 CFR 351.305 of the Department's regulations. Timely notification of the return or destruction of APO materials or conversion to judicial protective order is hereby requested. Failure to comply with the regulations and terms of an APO is a violation which is subject to sanction.

We are issuing and publishing these results and notice in accordance with sections 751(c), 752, and 777(i)(1) of the Act.

Dated: March 29, 2000.

Joseph A. Spetrini,

Acting Assistant Secretary for Import Administration.

[FR Doc. 00–8545 Filed 4–5–00; 8:45 am]

BILLING CODE 3510–DS–P

[1] See Extension of Time Limit for Final Results of Five-Year Reviews, 64 FR 71726 (December 22, 1999).

DEPARTMENT OF COMMERCE

International Trade Administration

[A–580–815, A–580–816]

Certain Cold-Rolled and Corrosion-Resistant Carbon Steel Flat Products From Korea; Final Results of Expedited Sunset Reviews

AGENCY: Import Administration, International Trade Administration, Department of Commerce.

ACTION: Notice of final results of expedited sunset reviews.

SUMMARY: On September 1, 1999, the Department of Commerce (''the Department'') published the notice of initiation of sunset reviews of the antidumping duty orders on certain cold-rolled and corrosion-resistant carbon steel flat products from Korea. On the basis of a notice of intent to participate and adequate substantive response filed on behalf of a domestic interested party in each of these reviews, and inadequate response (in these cases no response) from respondent interested parties, we determined to conduct expedited sunset reviews. Based on our analysis of the substantive comments received, we find that revocation of the antidumping duty orders would be likely to lead to continuation or recurrence of dumping at the levels listed below in the section entitled ''Final Results of the Review.''

EFFECTIVE DATE: April 6, 2000.

FOR FURTHER INFORMATION CONTACT: Martha V. Douthit or Melissa G. Skinner, Office of Policy, Import Administration, International Trade

Administration, U.S. Department of Commerce, 14th Street and Constitution Avenue, NW, Washington, DC 20230; telephone: (202) 482–5050 and (202) 482–1560, respectively.

SUPPLEMENTARY INFORMATION:

Statute and Regulations

Unless otherwise indicated, all citations to the Tariff Act of 1930, as amended (''the Act''), are references to the provisions effective January 1, 1995, the effective date of the amendments made to the Act by the Uruguay Round Agreements Act (''URAA''). In addition, unless otherwise indicated, all citations to the Department of Commerce's (''the Department's'') regulations are to 19 CFR part 351 (1999). Guidance on methodological or analytical issues relevant to the Department's conduct of sunset reviews is set forth in the Department Policy Bulletin 98:3—*Policies Regarding the Conduct of Five-year (''Sunset'') Reviews of Antidumping and Countervailing Duty Orders; Policy Bulletin,* 63 FR 18871 (April 16, 1998) (*Sunset Policy Bulletin*).

Background

On September 1, 1999, the Department published the notice of initiation of sunset reviews of the antidumping duty orders on certain cold-rolled and certain corrosion-resistant carbon steel flat products from Korea (64 FR 47767) pursuant to section 751(c) of the Act. We invited parties to comment. On the basis of a notice of intent to participate and adequate substantive response filed on behalf of domestic interested parties in both reviews, and inadequate response (in these cases no response) from respondent interested parties, we determined to conduct expedited sunset reviews. The Department has conducted these sunset reviews in accordance with sections 751 and 752 of the Act.

In accordance with section 751(c)(5)(C)(v) of the Act, the Department may treat a review as extraordinarily complicated if it is a review of a transition order (*i.e.,* an order in effect on January 1, 1995). These reviews cover transition orders within the meaning of section 751(c)(6)(C)(ii) of the Act. Therefore, on December 22, 1999, the Department determined that the sunset reviews of the antidumping duty orders on certain cold-rolled and certain corrosion-resistant carbon steel flat products from Korea are extraordinarily complicated and extended the time limit for completion of the final results until not later than March 29, 2000, in accordance with section 751(c)(5)(B) of the Act.[1]

Scope of Review

The merchandise covered by these orders is certain cold-rolled and certain corrosion-resistant carbon steel flat products from Korea. The order on cold-rolled steel covers cold-rolled (cold-reduced) carbon steel flat-rolled products, of rectangular shape, neither clad, plated nor coated with metal, whether or not painted, varnished or coated with plastics or other nonmetallic substances, in coils (whether or not in successively superimposed layers) and of a width of 0.5 inch or greater, or in straight lengths which, if of a thickness less than 4.75 millimeters, are of a width of 0.5 inch or greater and which measures at least 10 times the thickness or if of a thickness of 4.75 millimeters or more are of a width which exceeds 150 millimeters and measures at least twice the thickness, as currently classifiable in the Harmonized Tariff Schedule (''HTS'') under item numbers 7209.15.0000, 7209.16.0030, 7209.16.0060, 7209.16.0090, 7209.17.0030, 7209.17.0060, 7209.17.0090, 7209.18.1530, 7209.18.1560, 7209.18.2550, 7209.18.6000, 7209.25.0000, 7209.26.0000, 7209.27.0000, 7209.28.0000, 7209.90.0000, 7210.70.3000, 7210.90.9000, 7211.23.1500, 7211.23.2000, 7211.23.3000, 7211.23.4500, 7211.23.6030, 7211.23.6060, 7211.23.6085, 7211.29.2030, 7211.29.2090, 7211.29.4500, 7211.29.6030, 7211.29.6080, 7211.90.0000, 7212.40.1000, 7212.40.5000, 7212.50.0000, 7215.50.0015, 7215.50.0060, 7215.50.0090, 7215.90.5000, 7217.10.1000, 7217.10.2000, 7217.10.3000, 7217.10.7000, 7217.90.1000, 7217.90.5030, 7217.90.5060, 7217.90.5090. Included in this order are flat-rolled products of non-rectangular cross-section where such cross-section is achieved subsequent to the rolling process (*i.e.,* products which have been ''worked after rolling'')—for example, products which have been beveled or rounded at the edges. Excluded from this review is certain shadow mask steel, *i.e.,* aluminum-killed, cold-rolled steel coil that is open-coil annealed, has a carbon content of less than 0.002 percent, is of 0.003 to 0.012 inch in thickness, 15 to 30 inches in width, and has an ultra flat, isotropic surface.

The order on certain corrosion-resistant carbon steel flat products covers flat-rolled carbon steel products, of rectangular shape, either clad, plated, or coated with corrosion-resistant metals such as zinc, aluminum, or zinc-, aluminum-, nickel- or iron-based alloys, whether or not corrugated or painted, varnished or coated with plastics or other nonmetallic substances in addition to the metallic coating, in coils (whether or not in successively superimposed layers) and of a width of 0.5 inch or greater, or in straight lengths which, if of a thickness less than 4.75 millimeters, are of a width of 0.5 inch or greater and which measures at least 10 times the thickness or if of a thickness of 4.75 millimeters or more are of a width which exceeds 150 millimeters and measures at least twice the thickness, as currently classifiable in the HTS under item numbers 7210.30.0030, 7210.30.0060, 7210.41.0000, 7210.49.0030, 7210.49.0090, 7210.61.0000, 7210.69.0000, 7210.70.6030, 7210.70.6060, 7210.70.6090, 7210.90.1000, 7210.90.6000, 7210.90.9000, 7212.20.0000, 7212.30.1030, 7212.30.1090, 7212.30.3000, 7212.30.5000, 7212.40.1000, 7212.40.5000, 7212.50.0000, 7212.60.0000, 7215.90.1000, 7215.90.3000, 7215.90.5000, 7217.20.1500, 7217.30.1530, 7217.30.1560, 7217.90.1000, 7217.90.5030, 7217.90.5060, 7217.90.5090. Included in this order are flat-rolled products of nonrectangular cross-section where such cross-section is achieved subsequent to the rolling process (*i.e.,* products which have been ''worked after rolling'')—for example, products which have been beveled or rounded at the edges. Excluded from this review are: flat rolled steel products either plated or coated with tin, lead, chromium, chromium oxides, both tin and lead (''terne plate''), or both chromium and chromium oxides (''tin-free steel''), whether or not painted, varnished or coated with plastics or other nonmetallic substances in addition to the metallic coating; clad products in straight lengths of 0.1875 inch or more in composite thickness and of a width which exceeds 150 millimeters and measures at least twice the thickness; and certain clad stainless flat-rolled products, which are three-layered corrosion-resistant carbon steel flat-rolled products less than 4.75 millimeters in composite thickness that consist of a carbon steel flat-rolled

[1] *See Extension of Time Limit for Final Results of Five-Year Reviews,* 64 FR 71726 (December 22, 1999).

product clad on both sides with stainless steel in a 20%-60%-20% ratio. These HTS item numbers are provided for convenience and customs purposes. The written descriptions remain dispositive.

The antidumping duty order remains in effect for all Korean producers and exporters of the subject merchandise

Analysis of Comments Received

All issues raised in the substantive responses by parties to these sunset reviews are addressed in the ''Issues and Decision Memorandum'' (''Decision Memo'') from Jeffrey A. May, Director, Office of Policy, Import Administration, to Robert S. LaRussa, Assistant Secretary for Import Administration, dated March 29, 2000, which is hereby adopted by this notice. The issues discussed in the attached Decision Memo include the likelihood of continuation or recurrence of dumping and the magnitude of the margin likely to prevail were the orders revoked. Parties can find a complete discussion of all issues raised in these reviews and the corresponding recommendations in this public memorandum, which is on file in the Department's Central Record Unit, Room B–099, 14th Street and Constitution Ave., NW, Washington, DC 20230.

In addition, a complete version of the Decision Memo can be accessed directly on the Web at www.ita.doc.gov/import admin/records/frn. The paper copy and electronic version of the Decision Memo are identical in content.

Final Results of Reviews

We determine that revocation of the antidumping duty orders would be likely to lead to continuation or recurrence of dumping at the following percentage weighted-average margins:

Manufacturer/exporter	Margin (percent)
Certain Cold-Rolled Steel Flat Products	
Pohang Iron and Steel Company (POSCO)	14.44
All Others	14.44
Certain Corrosion-Resistant Steel Flat Products	
Pohang Iron and Steel Company (POSCO)	17.70
All Others	17.70

In addition, in the administrative reviews of these orders initiated during 1996 and 1998, the Department found antidumping duties were being absorbed. Specifically, in the final results of the administrative reviews initiated in 1996 (covering 1995/96) the Department found antidumping duties were being absorbed by POSCO on the following percentage of its U.S. sales: 35.54 percent with respect to certain cold-rolled carbon steel flat products, and 14.64 percent with respect to corrosion-resistant carbon steel flat products.[2] Additionally, in the reviews of both of these orders initiated in 1998 (covering 1997/98) the Department found that duties were absorbed by three companies on the following percentage of their U.S. sales: certain cold-rolled carbon steel flat products, POSCO—2.70 percent; and corrosion-resistant carbon steel flat products, Dongbu—20.81 percent, POSCO—6.85 percent, and Union—4.49 percent.[3]

This notice also serves as the only reminder to parties subject to administrative protective orders (''APO'') of their responsibility concerning the return or destruction of proprietary information disclosed under APO in accordance with 19 CFR 351.305 of the Department's regulations. Timely notification of the return or destruction of APO materials or conversion to judicial protective order is hereby requested. Failure to comply with the regulations and terms of an APO is a violation which is subject to sanction.

We are issuing and publishing this determination and notice in accordance with sections 751(c), 752, and 777(i)(1) of the Act.

Dated: March 29, 2000.

Joseph A. Spetrini,

Acting, Assistant Secretary for Import Administration.

[FR Doc. 00–8558 Filed 4–5–00; 8:45 am]

BILLING CODE 3510–DS–P

[2] *See Certain Cold-Rolled and Corrosion-Resistant Carbon Steel Flat Products From Korea: Final Results of Antidumping Duty Administrative Reviews: Final Results of Antidumping Duty Administrative Reviews;* 63 FR 13170 (March 18, 1998)

[3] *See Certain Cold-Rolled and Corrosion-Resistant Carbon Steel Flat Products From Korea: Final Results of Antidumping Duty Administrative Reviews: Final Results of Antidumping Duty Administrative Reviews;* 65 FR 13359 (March 13, 2000).

DEPARTMENT OF COMMERCE

International Trade Administration

[A–428–814]

Cold-Rolled Carbon Steel Flat Products from Germany; Final Results of Expedited Sunset Review of Antidumping Duty Order

AGENCY: Import Administration, International Trade Administration, Department of Commerce.

ACTION: Notice of final results of expedited sunset review: cold-rolled carbon steel flat products from Germany.

SUMMARY: On September 1, 1999, the Department of Commerce (''the Department'') published the notice of initiation of sunset review of the antidumping duty order on cold-rolled carbon steel flat products from Germany (64 FR 47767), pursuant to section 751(c) of the Tariff Act of 1930, as amended (''the Act''). On the basis of a notice of intent to participate and adequate substantive response filed on behalf of domestic interested parties and a waiver of participation from respondent interested parties, we determined to conduct an expedited sunset review. Based on our analysis of the comments received, we find that revocation of the antidumping duty order would be likely to lead to continuation or recurrence of dumping at the levels listed below in the section entitled *Final Results of the Review.*

EFFECTIVE DATE: April 6, 2000.

FOR FURTHER INFORMATION CONTACT: Eun W. Cho or Melissa G. Skinner, Office of Policy for Import Administration, International Trade Administration, U.S. Department of Commerce, 14th Street and Constitution Avenue, NW, Washington, DC 20230; telephone: (202) 482–1698 or (202) 482–1560, respectively.

SUPPLEMENTARY INFORMATION:

The Applicable Statute

Unless otherwise indicated, all citations to the Act are references to the provisions effective January 1, 1995, the effective date of the amendments made to the Act by the Uruguay Round Agreements Act (''URAA''). In addition, unless otherwise indicated, all citations to the Department's regulations are to 19 CFR part 351 (1999). Guidance on methodological or analytical issues relevant to the Department's conduct of sunset reviews is set forth in the Department's Policy Bulletin 98:3—*Policies Regarding the Conduct of Five-year (''Sunset'') Reviews of*

Antidumping and Countervailing Duty Orders; Policy Bulletin, 63 FR 18871 (April 16, 1998) (Sunset Policy Bulletin).

Background

On September 1, 1999, the Department published the notice of initiation of sunset review of the antidumping duty order on cold-rolled carbon steel flat products from Germany (64 FR 47767). We invited parties to comment. On the basis of a notice of intent to participate and adequate substantive responses filed on behalf of domestic interested parties and a waiver of participation from respondent interested parties, we determined to conduct an expedited sunset review. The Department is conducting this sunset review in accordance with sections 751 and 752 of the Act.

In accordance with section 751(c)(5)(C)(v) of the Act, the Department may treat a review as extraordinarily complicated if it is a review of a transition order (*i.e.*, an order in effect on January 1, 1995). This review concerns a transition order within the meaning of section 751(c)(6)(C)(ii) of the Act. Therefore, on December 22, 1999, the Department determined that the sunset review of the antidumping duty order on cold-rolled carbon steel flat products from Germany is extraordinarily complicated and extended the time limit for completion of the final results of this review until not later than March 29, 2000, in accordance with section 751(c)(5)(B) of the Act. [1]

Scope of Review

The product covered by this review is certain cold-rolled carbon steel flat products from Germany. This scope includes cold-rolled (cold-reduced) carbon steel flat-rolled products, of rectangular shape, neither clad, plated nor coated with metal, whether or not painted, varnished or coated with plastics or other nonmetallic substances, in coils (whether or not in successively superimposed layers) and of a width of 0.5 inch or greater, or in straight lengths which, if of a thickness less than 4.75 millimeters, are of a width of 0.5 inch or greater and which measures at least 10 times the thickness or if of a thickness of 4.75 millimeters or more are of a width which exceeds 150 millimeters and measures at least twice the thickness, as currently classifiable in the Harmonized Tariff Schedule (''HTS'') under item numbers 7209.11.0000, 7209.12.0030, 7209.12.0090, 7209.13.0030, 7209.13.0090, 7209.14.0030, 7209.14.0090, 7209.21.0000, 7209.22.0000, 7209.23.0000, 7209.24.1000, 7209.24.5000, 7209.31.0000, 7209.32.0000, 7209.33.0000, 7209.34.0000, 7209.41.0000, 7209.42.0000, 7209.43.0000, 7209.44.0000, 7209.90.0000, 7210.70.3000, 7210.90.9000, 7211.30.1030, 7211.30.1090, 7211.30.3000, 7211.30.5000, 7211.41.1000, 7211.41.3030, 7211.41.3090, 7211.41.5000, 7211.41.7030, 7211.41.7060, 7211.41.7090, 7211.49.1030, 7211.49.1090, 7211.49.3000, 7211.49.5030, 7211.49.5060, 7211.49.5090, 7211.90.0000, 7212.40.1000, 7212.40.5000, 7212.50.0000, 7217.11.1000, 7217.11.2000, 7217.11.3000, 7217.19.1000, 7217.19.5000, 7217.21.1000, 7217.29.1000, 7217.29.5000, 7217.31.1000, 7217.39.1000, and 7217.39.5000. Included in this scope are flat-rolled products of non-rectangular cross-section where such cross-section is achieved subsequent to the rolling process (*i.e.,* products which have been worked after rolling)—for example, products which have been bevelled or rounded at the edges. Excluded from this scope is certain shadow mask steel; *i.e.,* aluminum-killed, cold-rolled steel coil that is open-coil annealed, has a carbon content of less than 0.002 percent, is of 0.003 to 0.012 inch in thickness, 15 to 30 inches in width, and has an ultra flat, isotropic surface.

The HTS item numbers are provided for convenience and custom purposes. The written description remains dispositive.

Analysis of Comments Received

All issues raised in substantive responses by parties to this sunset review are addressed in the Issues and Decision Memorandum (''Decision Memo'') from Jeffrey A. May, Director, Office of Policy, Import Administration, to Robert S. LaRussa Acting Assistant Secretary for Import Administration, dated March 29, 2000, which is hereby adopted by this notice. The issues discussed in the attached Decision Memo include the likelihood of continuation or recurrence of dumping and the magnitude of the margin likely to prevail were the order revoked. Parties can find a complete discussion of all issues raised in this review and the corresponding recommendations in this public memorandum which is on file in B–099, the Central Records Unit, of the main Commerce building.

In addition, a complete version of the Decision Memo can be accessed directly on the Web at www.ita.doc.gov/import admin/records/frn. The paper copy and electronic version of the Decision Memo are identical in content.

Final Results of Review

We determine that revocation of the antidumping duty order would be likely to lead to continuation or recurrence of dumping at the following percentage weighted-average margins:

Manufacturer/exporter	Margin (percent)
Thyssen	20.64
Klockner	23.54
All others	21.66

This notice also serves as the only reminder to parties subject to administrative protective orders (APO) of their responsibility concerning the return or destruction of proprietary information disclosed under APO in accordance with 19 CFR 351.305 of the Department's regulations. Timely notification of the return or destruction of APO materials or conversion to judicial protective order is hereby requested. Failure to comply with the regulations and terms of an APO is a violation which is subject to sanction.

We are issuing and publishing this determination and notice in accordance with sections section 751(c), 752, and 777(i) of the Act.

Dated: March 29, 2000.

Joseph A. Spetrini,

Acting Assistant Secretary for Import Administration.

[FR Doc. 00–8552 Filed 4–5–00; 8:45 am]

BILLING CODE 3510–DS–P

[1] See Extension of Time Limit for Final Results of Five-Year Reviews, 64 FR 71726 (December 22, 1999).

DEPARTMENT OF COMMERCE

International Trade Administration

[A–307–815]

Notice of Final Determination of Sales at Less Than Fair Value: Certain Cold-Rolled Carbon-Quality Steel Flat Products From Venezuela

AGENCY: Import Administration, International Trade Administration, Department of Commerce.

ACTION: Notice of final determination of antidumping duty investigation.

EFFECTIVE DATE: April 6, 2000.

FOR FURTHER INFORMATION CONTACT: Maureen McPhillips or Linda Ludwig, Import Administration, International Trade Administration, U.S. Department of Commerce, 14th Street and

Constitution Avenue, NW., Washington, DC 20230; telephone: (202) 482–0193 or (202) 482–3833, respectively.

Applicable Statute and Regulations

Unless otherwise indicated, all citations to the Tariff Act of 1930, as amended (the Act), are references to the provisions effective January 1, 1995, the effective date of the amendments made to the Act by the Uruguay Round Agreements Act (URAA). In addition, unless otherwise indicated, all citations to the Department of Commerce (the Department) regulations are to the regulations at 19 CFR part 351 (April 1999).

Final Determination

We determine that certain cold-rolled carbon-quality steel flat products from Venezuela are being sold in the United States at less than fair value (LTFV), as provided in section 735 of the Act. The estimated margins are shown in the *Suspension of Liquidation* section of this notice.

Case History

The preliminary determination in this investigation was published November 15, 1999. *See Notice of Preliminary Determination of Sales at Less Than Fair Value: Certain Cold-Rolled Carbon-Quality Steel Flat Products from Venezuela,* 64 FR 61826 (Nov. 15, 1999) *(Preliminary Determination).* On January 4, 2000, the petitioners, Bethlehem Steel Corporation, Gulf States Steel, Inc., Ispat Inland Steel, Inc., LTV Steel Company, Inc., National Steel Corporation, Steel Dynamics, Inc., U.S. Steel Group, a unit of USX Corporation, United Steelworkers of America, and Weirton Steel Corporation, and the respondent, Siderurgica del Orinoco, C.V. (Sidor), submitted case briefs. On January 11, 2000, we received a rebuttal brief from petitioners. Sidor requested a postponement of the final determination to 135 days after publication of the preliminary determination and an extension of the provisional measures to no more than six months, pursuant to 19 CFR 351.210(b)(2)(ii) and 351.210(e)(2). *See Postponement of Final Determination of Certain Cold-Rolled Flat-Rolled Carbon-Quality Steel Products from Venezuela,* 65 FR 5499 (February 4, 2000).

Period of Investigation

The period of investigation (POI) is April 1, 1998 though March 31, 1999.

Analysis of Comments Received

All issues raised in the case and rebuttal briefs by parties to this investigation are addressed in the *Issues and Decision Memorandum (Decision Memorandum)* from Joseph A. Spetrini to Robert LaRussa, Assistant Secretary for Import Administration, dated March 29, 2000, which is hereby adopted by this notice. A list of the issues which parties have raised and to which we have responded, all of which are in the *Decision Memorandum,* is attached to this notice as an Appendix. Parties can find a complete discussion of all issues raised in this investigation and the corresponding recommendations in this public memorandum which is on file in the Central Records Unit, room B–099 of the main Department building. In addition, a complete version of the *Decision Memorandum* can be accessed directly on the Web at *www.ita.doc.gov/import_admin/records/frn/.* The paper copy and the electronic version of the *Decision Memorandum* are identical in content.

Scope of Investigation

For a description of the scope of this investigation, see the ''Scope of Investigation'' section of the *Decision Memorandum,* which is on file in B–099 and available on the Web at *www.ita.doc.gov/import_admin/records/frn/.*

Changes Since the Preliminary Determination

Based on our analysis of comments received, we have not made any changes in the margin calculations from the *Preliminary Determination.*

The ''All Others'' Rate

The foreign manufacturer/exporter in this investigation is being assigned a dumping margin on the basis of adverse facts available. Section 735(c)(5) of the Act provides that, where the dumping margins established for all exporters and producers individually investigated are determined entirely under section 776 of the Act, the Department may use any reasonable method to establish the estimated ''all others'' rate for exporters and producers not individually investigated. Therefore, consistent with the Statement of Administrative Action (''SAA'') at 873, we are using an alternative method to establish the estimated all others rate. In the *Preliminary Determination,* as an alternative, we based the all others rate on a simple average of the margins in the petition. We received no comments on this issue, and therefore, continue to use the simple average of the margins in the petition as the basis for the final determination. As a result, the all others rate is 42.93 percent.

Continuation of Suspension of Liquidation

In accordance with section 735(c)(1)(B) of the Act, we are directing the Customs Service to continue to suspend liquidation of all entries of cold-rolled carbon-quality steel flat products produced and/or exported from Venezuela by Sidor, that are entered, or withdrawn from warehouse, for consumption on or after August 17, 1999 (90 days prior to the date of publication of the preliminary determination in the **Federal Register**). In addition, we will direct the Customs Service to continue to suspend liquidation of cold-rolled steel products exported from Venezuela by companies other than Sidor that are entered, or withdrawn from warehouse, for consumption on or after November 15, 1999, the date of publication of our preliminary determination in the **Federal Register**. We will instruct the Customs Service to require a cash deposit or bond equal to the percentage margins, as indicated below. These suspension-of-liquidation instructions will remain in effect until further notice. The dumping margins are as follows:

Exporter/manufacturer	Margin (percent)
Sidor	56.37
All Others	42.93

The all others rate, which we derived from the average of the margins calculated in the petition, applies to all entries of subject merchandise other than those exported by the named respondent.

ITC Notification

In accordance with section 735(c)(1)(B) of the Act, we have notified the International Trade Commission (ITC) of our determination. Because our final determination is affirmative, the ITC will, within 45 days, determine whether these imports are materially injuring, or threaten material injury to, the U.S. industry. If the ITC determines that material injury, or threat of material injury does not exist, the proceeding will be terminated and all securities posted will be refunded or canceled. If the ITC determines that such injury does exist, the Department will issue an antidumping duty order directing Customs' officials to assess antidumping duties on all imports of the subject merchandise entered, or withdrawn from warehouse, for consumption on or after the effective date of the suspension of liquidation.

This determination is issued and published in accordance with sections 735(d) and 777(i)(1) of the Act.

Dated: March 29, 2000.

Joseph A. Spetrini,

Acting Assistant Secretary for Import Administration.

Appendix—Issues in Decision Memorandum

Comments and Responses

Use of Facts Available
Critical Circumstances

[FR Doc. 00–8559 Filed 4–5–00; 8:45 am]

BILLING CODE 3510–DS–P

DEPARTMENT OF COMMERCE

International Trade Administration

[A–602–803]

Certain Corrosion-Resistant Carbon Steel Flat Products From Australia; Final Results of Expedited Sunset Review

AGENCY: Import Administration, International Trade Administration, Department of Commerce.

ACTION: Notice of final results of expedited sunset review: certain corrosion-resistant carbon steel flat products from Australia.

SUMMARY: On September 1, 1999, the Department of Commerce (''the Department'') initiated a sunset review of the antidumping duty order on certain corrosion-resistant carbon steel flat products (''CR flat products'') from Australia (64 FR 47767) pursuant to section 751(c) of the Tariff Act of 1930, as amended (''the Act''). On the basis of a notice of intent to participate filed on behalf of domestic interested parties and inadequate response (in this case, no response) from respondent interested parties, the Department determined to conduct an expedited review. As a result of this review, the Department finds that revocation of the antidumping duty order would likely lead to continuation or recurrence of dumping at the levels indicated in the Final Results of Review section of this notice.

EFFECTIVE DATE: April 6, 2000.

FOR FURTHER INFORMATION CONTACT: Darla D. Brown or Melissa G. Skinner, Office of Policy for Import Administration, International Trade Administration, U.S. Department of Commerce, 14th Street and Constitution Avenue, NW, Washington, DC 20230; telephone: (202) 482–3207 or (202) 482–1560, respectively.

SUPPLEMENTARY INFORMATION:

Applicable Statute and Regulations

Unless otherwise indicated, all citations to the Tariff Act of 1930, as amended (''the Act''), are references to the provisions effective January 1, 1995, the effective date of the amendments made to the Act by the Uruguay Round Agreements Act (''URAA''). In addition, unless otherwise indicated, all citations to the Department's regulations are to 19 CFR part 351 (1999) in general. Guidance on methodological or analytical issues relevant to the Department's conduct of sunset reviews is set forth in the Department's Policy Bulletin 98:3—*Policies Regarding the Conduct of Five-year (''Sunset'') Reviews of Antidumping and Countervailing Duty Orders; Policy Bulletin*, 63 FR 18871 (April 16, 1998) (''*Sunset Policy Bulletin*'').

Background

On September 1, 1999, the Department initiated a sunset review of the antidumping order on CR flat products from Australia (64 FR 47767), pursuant to section 751(c) of the Act. On the basis of a notice of intent to participate and adequate substantive response filed on behalf of domestic interested parties, and inadequate response (in this case, no response) from respondent interested parties, we determined to conduct an expedited review. The Department has conducted this sunset review in accordance with sections 751 and 752 of the Act.

Scope

The products covered by this order constitute one ''class or kind'' of merchandise: certain corrosion-resistant carbon steel flat products. The class or kind includes flat-rolled carbon steel products, of rectangular shape, either clad, plated, or coated with corrosion-resistant metals such as zinc, aluminum, or zinc-, aluminum-, nickel- or iron-based alloys, whether or not corrugated or painted, varnished or coated with plastics or other nonmetallic substances in addition to the metallic coating, in coils (whether or not in successively superimposed layers) and of a width of 0.5 inch or greater, or in straight lengths which, if of a thickness less than 4.75 millimeters, are of a width of 0.5 inch or greater and which measures at least 10 times the thickness or if of a thickness of 4.75 millimeters or more are of a width which exceeds 150 millimeters and measures at least twice the thickness, as currently classifiable in the Harmonized Tariff Schedule (''HTS'') under item numbers 7210.31.0000, 7210.39.0000, 7210.41.0000, 7210.49.0030, 7210.49.0090, 7210.60.0000, 7210.70.6030, 7210.70.6060, 7210.70.6090, 7210.90.1000, 7210.90.6000, 7210.90.9000, 7212.21.0000, 7212.29.0000, 7212.30.1030, 7212.30.1090, 7212.30.3000, 7212.30.5000, 7212.40.1000, 7212.40.5000, 7212.50.0000, 7212.60.0000, 7215.90.1000, 7215.90.5000, 7217.12.1000, 7217.13.1000, 7217.19.1000, 7217.19.5000, 7217.22.5000, 7217.23.5000, 7217.29.1000, 7217.29.5000, 7217.32.5000, 7217.33.5000, 7217.39.1000, and 7217.39.5000. Included are flat-rolled products of non-rectangular cross-section where such cross-section is achieved subsequent to the rolling process (*i.e.,* products which have been ''worked after rolling'')—for example, products which have been beveled or rounded at the edges. Excluded are flat-rolled steel products either plated or coated with tin, lead, chromium, chromium oxides, both tin and lead (''terne plate''), or both chromium and chromium oxides (''tin-free steel''), whether or not painted, varnished or coated with plastics or other nonmetallic substances in addition to the metallic coating. Also excluded are clad products in straight lengths of 0.1875 inch or more in composite thickness and of a width which exceeds 150 millimeters and measures at least twice the thickness. Also excluded are certain clad stainless flat-rolled products, which are three-layered corrosion-resistant carbon steel flat-rolled products less than 4.75 millimeters in composite thickness that consist of a carbon steel flat-rolled product clad on both sides with stainless steel in a 20%-60%-20% ratio. These HTS item numbers are provided for convenience and customs purposes only. The written description remains dispositive.

Analysis of Substantive Response

All issues raised in the substantive responses by parties to this sunset review are addressed in the ''Issues and Decision Memorandum'' (''Decision Memo'') from Jeffrey A. May, Director, Office of Policy, Import Administration, to Robert S. LaRussa, Assistant Secretary for Import Administration, dated March 29, 2000, which is hereby adopted by this notice. The issues discussed in the attached Decision Memo include the likelihood of continuation or recurrence of dumping and the magnitude of the margin likely to prevail were the order revoked. Parties can find a complete discussion of all issues raised in this review and the corresponding recommendations in

this public memorandum which is on file in room B–099 of the main Commerce building.

In addition, a complete version of the Decision Memo can be accessed directly on the Web at www.ita.doc.gov/import—admin/records/frn/. The paper copy and electronic version of the Decision Memo are identical in content.

Final Results of Review

We determine that revocation of the antidumping duty order on CR flat products from Australia would be likely to lead to continuation or recurrence of dumping at the following percentage weighted-average margins:

Manufacturer/exporter	Margin (percent)
Broken Hill Proprietary Co., Ltd.	24.96
All Others	24.96

This notice serves as the only reminder to parties subject to administrative protective order (''APO'') of their responsibility concerning the disposition of proprietary information disclosed under APO in accordance with 19 CFR 351.305 of the Department's regulations. Timely notification of return/destruction of APO materials or conversion to judicial protective order is hereby requested. Failure to comply with the regulations and the terms of an APO is a sanctionable violation.

This five-year (''sunset'') review and notice are in accordance with sections 751(c), 752, and 777(i)(1) of the Act.

Dated: March 29, 2000.

Joseph A. Spetrini,

Acting Assistant Secretary for Import Administration.

[FR Doc. 00–8550 Filed 4–5–00; 8:45 am]

BILLING CODE 3510–DS–P

DEPARTMENT OF COMMERCE

International Trade Administration

[A–427–808]

Corrosion-Resistant Carbon Steel Flat Products From France; Final Results of Expedited Sunset Review of Antidumping Duty Order

AGENCY: Import Administration, International Trade Administration, Department of Commerce.

ACTION: Notice of final results of expedited sunset review: Corrosion-resistant carbon steel flat products from France.

SUMMARY: On September 1, 1999, the Department of Commerce (''the Department'') published the notice of initiation of sunset review of the antidumping duty order on corrosion-resistant carbon steel flat products from France (64 FR 47767), pursuant to section 751(c) of the Tariff Act of 1930, as amended (''the Act''). On the basis of a notice of intent to participate and adequate substantive response filed on behalf of domestic interested parties and inadequate response (in this case no response) from respondent interested parties, we determined to conduct an expedited sunset review. Based on our analysis of the comments received, we find that revocation of the antidumping duty order would be likely to lead to continuation or recurrence of dumping at the levels listed below in the section entitled Final Results of the Review.

EFFECTIVE DATE: April 6, 2000.

FOR FURTHER INFORMATION CONTACT: Eun W. Cho or Melissa G. Skinner, Office of Policy for Import Administration, International Trade Administration, U.S. Department of Commerce, 14th Street and Constitution Avenue, NW, Washington, DC 20230; telephone: (202) 482–1698 or (202) 482–1560, respectively.

SUPPLEMENTARY INFORMATION:

The Applicable Statute

Unless otherwise indicated, all citations to the Act are references to the provisions effective January 1, 1995, the effective date of the amendments made to the Act by the Uruguay Round Agreements Act (''URAA''). In addition, unless otherwise indicated, all citations to the Department regulations are to 19 CFR part 351 (1999). Guidance on methodological or analytical issues relevant to the Department's conduct of sunset reviews is set forth in the Department Policy Bulletin 98:3—Policies Regarding the Conduct of Five-year (''Sunset'') Reviews of Antidumping and Countervailing Duty Orders; Policy Bulletin, 63 FR 18871 (April 16, 1998) (Sunset Policy Bulletin).

Background

On September 1, 1999, the Department published the notice of initiation of sunset review of the antidumping duty order on corrosion-resistant carbon steel flat products from France (64 FR 47767). We invited parties to comment. On the basis of a notice of intent to participate and adequate substantive response filed on behalf of domestic interested parties and no response from respondent interested parties, we determined to conduct an expedited sunset review. The Department is conducting this sunset review in accordance with sections 751 and 752 of the Act.

In accordance with section 751(c)(5)(C)(v) of the Act, the Department may treat a review as extraordinarily complicated if it is a review of a transition order (i.e., an order in effect on January 1, 1995). This review concerns a transition order within the meaning of section 751(c)(6)(C)(ii) of the Act because the order was issued on August 19, 1993. Therefore, on December 22, 1999, the Department determined that the sunset review of the antidumping duty order on corrosion-resistant carbon steel flat products from France is extraordinarily complicated and extended the time limit for completion of the final results of this review until not later than March 29, 2000, in accordance with section 751(c)(5)(B) of the Act.[1]

Scope of Review

The products covered by this order are corrosion-resistant carbon steel flat products (''corrosion-resistant steel'') from France. This scope includes flat-rolled carbon steel products, of rectangular shape, either clad, plated, or coated with corrosion-resistant metals such as zinc, aluminum, or zinc-, aluminum-, nickel- or iron-based alloys, whether or not corrugated or painted, varnished or coated with plastics or other nonmetallic substances in addition to the metallic coating, in coils (whether or not in successively superimposed layers) and of a width of 0.5 inch or greater, or in straight lengths which, if of a thickness less than 4.75 millimeters, are of a width of 0.5 inch or greater and which measures at least 10 times the thickness or if of a thickness of 4.75 millimeters or more are of a width which exceeds 150 millimeters and measures at least twice the thickness, as currently classifiable in the Harmonized Tariff Schedule (''HTS'') under item numbers 7210.31.0000, 7210.39.0000, 7210.41.0000, 7210.49.0030, 7210.49.0090, 7210.60.0000, 7210.70.6030, 7210.70.6060, 7210.70.6090, 7210.90.1000, 7210.90.6000, 7210.90.9000, 7212.21.0000, 7212.29.0000, 7212.30.1030, 7212.30.1090, 7212.30.3000, 7212.30.5000, 7212.40.1000, 7212.40.5000, 7212.50.0000, 7212.60.0000, 7215.90.1000, 7215.90.5000, 7217.12.1000, 7217.13.1000, 7217.19.1000, 7217.19.5000, 7217.22.5000, 7217.23.5000,

[1] See Extension of Time Limit for Final Results of Five-Year Reviews, 64 FR 71726 (December 22, 1999).

7217.29.1000, 7217.29.5000, 7217.32.5000, 7217.33.5000, 7217.39.1000, and 7217.39.5000. Included in this scope are flat-rolled products of non-rectangular cross-section where such cross-section is achieved subsequent to the rolling process (i.e., products which have been worked after rolling)—for example, products which have been bevelled or rounded at the edges. Excluded from this scope are flat-rolled steel products either plated or coated with tin, lead, chromium, chromium oxides, both tin and lead (''terne plate''), or both chromium and chromium oxides (''tin-free steel''), whether or not painted, varnished or coated with plastics or other nonmetallic substances in addition to the metallic coating. Also excluded from this scope are clad products in straight lengths of 0.1875 inch or more in composite thickness and of a width which exceeds 150 millimeters and measures at least twice the thickness. Also excluded from this scope are certain clad stainless flat-rolled products, which are three-layered corrosion-resistant carbon steel flat-rolled products less than 4.75 millimeters in composite thickness that consist of a carbon steel flat-rolled product clad on both sides with stainless steel in a 20%-60%-20% ratio.

The HTS item numbers are provided for convenience and custom purposes. The written description remains dispositive.

Analysis of Comments Received

All issues raised in substantive responses by parties to this sunset review are addressed in the Issues and Decision Memorandum (''Decision Memo'') from Jeffrey A. May, Director, Office of Policy, Import Administration, to Robert S. LaRussa Assistant Secretary for Import Administration, dated March 29, 2000, which is hereby adopted by this notice. The issues discussed in the attached Decision Memo include the likelihood of continuation or recurrence of dumping and the magnitude of the margin likely to prevail were the order revoked. Parties can find a complete discussion of all issues raised in this review and the corresponding recommendations in this public memorandum which is on file in B–099, the Central Records Unit, of the Main Commerce building.

In addition, a complete version of the Decision Memo can be accessed directly on the Web at www.ita.doc.gov/import admin/records/frn. The paper copy and electronic version of the Decision Memo are identical in content.

Final Results of Review

We determine that revocation of the antidumping duty order would be likely to lead to continuation or recurrence of dumping at the following percentage weighted-average margins:

Manufacturer/exporter	Margin (percent)
Usinor	29.41
All others	29.41

This notice also serves as the only reminder to parties subject to administrative protective orders (APO) of their responsibility concerning the return or destruction of proprietary information disclosed under APO in accordance with 19 CFR 351.305 of the Department's regulations. Timely notification of the return or destruction of APO materials or conversion to judicial protective order is hereby requested. Failure to comply with the regulations and terms of an APO is a violation which is subject to sanction.

We are issuing and publishing this determination and notice in accordance with sections 751(c), 752, and 777(i) of the Act.

Dated: March 29, 2000.

Joseph A. Spetrini,

Acting Assistant Secretary for Import Administration.

[FR Doc. 00–8553 Filed 4–5–00; 8:45 am]

BILLING CODE 3510–DS–U

DEPARTMENT OF COMMERCE

International Trade Administration

[A–428–815]

Corrosion-Resistant Carbon Steel Flat Products From Germany; Final Results of Expedited Sunset Review of Antidumping Duty Order

AGENCY: Import Administration, International Trade Administration, Department of Commerce.

ACTION: Notice of final results of expedited sunset review: Corrosion-resistant carbon steel flat products from Germany.

SUMMARY: On September 1, 1999, the Department of Commerce (''the Department'') published the notice of initiation of sunset review of the antidumping duty order on corrosion-resistant carbon steel flat products from Germany (64 FR 47767), pursuant to section 751(c) of the Tariff Act of 1930, as amended (''the Act''). On the basis of a notice of intent to participate and adequate substantive response filed on behalf of domestic interested parties and a waiver of participation from respondent interested parties, we determined to conduct an expedited sunset review. Based on our analysis of the comments received, we find that revocation of the antidumping duty order would be likely to lead to continuation or recurrence of dumping at the levels listed below in the section entitled *Final Results of the Review.*

EFFECTIVE DATE: April 6, 2000.

FOR FURTHER INFORMATION CONTACT: Eun W. Cho or Melissa G. Skinner, Office of Policy for Import Administration, International Trade Administration, U.S. Department of Commerce, 14th Street and Constitution Avenue, NW, Washington, DC 20230; telephone: (202) 482–1698 or (202) 482–1560, respectively.

SUPPLEMENTARY INFORMATION:

The Applicable Statute

Unless otherwise indicated, all citations to the Act are references to the provisions effective January 1, 1995, the effective date of the amendments made to the Act by the Uruguay Round Agreements Act (''URAA''). In addition, unless otherwise indicated, all citations to the Department's regulations are to 19 CFR part 351 (1999). Guidance on methodological or analytical issues relevant to the Department's conduct of sunset reviews is set forth in the Department's Policy Bulletin 98:3—Policies Regarding the Conduct of Five-year (''Sunset'') Reviews of Antidumping and Countervailing Duty Orders; Policy Bulletin, 63 FR 18871 (April 16, 1998) (Sunset Policy Bulletin).

Background

On September 1, 1999, the Department published the notice of initiation of sunset review of the antidumping duty order on corrosion-resistant carbon steel flat products from Germany (64 FR 47767). We invited parties to comment. On the basis of a notice of intent to participate and adequate substantive response filed on behalf of domestic interested parties and a waiver of participation from respondent interested parties, we determined to conduct an expedited sunset review. The Department is conducting this sunset review in accordance with sections 751 and 752 of the Act.

In accordance with section 751(c)(5)(C)(v) of the Act, the Department may treat a review as extraordinarily complicated if it is a review of a transition order (i.e., an order in effect on January 1, 1995). This review concerns a transition order

within the meaning of section 751(c)(6)(C)(ii) of the Act. Therefore, on December 22, 1999, the Department determined that the sunset review of the antidumping duty order on corrosion-resistant carbon steel flat products from Germany is extraordinarily complicated and extended the time limit for completion of the final results of this review until not later than March 29, 2000, in accordance with section 751(c)(5)(B) of the Act.[1]

Scope of Review

The products covered by this order are corrosion-resistant carbon steel flat products (''corrosion-resistant steel'') from Germany. This scope includes flat-rolled carbon steel products, of rectangular shape, either clad, plated, or coated with corrosion-resistant metals such as zinc, aluminum, or zinc-, aluminum-, nickel-or iron-based alloys, whether or not corrugated or painted, varnished or coated with plastics or other nonmetallic substances in addition to the metallic coating, in coils (whether or not in successively superimposed layers) and of a width of 0.5 inch or greater, or in straight lengths which, if of a thickness less than 4.75 millimeters, are of a width of 0.5 inch or greater and which measures at least 10 times the thickness or if of a thickness of 4.75 millimeters or more are of a width which exceeds 150 millimeters and measures at least twice the thickness, as currently classifiable in the Harmonized Tariff Schedule (''HTS'') under item numbers 7210.31.0000, 7210.39.0000, 7210.41.0000, 7210.49.0030, 7210.49.0090, 7210.60.0000, 7210.70.6030, 7210.70.6060, 7210.70.6090, 7210.90.1000, 7210.90.6000, 7210.90.9000, 7212.21.0000, 7212.29.0000, 7212.30.1030, 7212.30.1090, 7212.30.3000, 7212.30.5000, 7212.40.1000, 7212.40.5000, 7212.50.0000, 7212.60.0000, 7215.90.1000, 7215.90.5000, 7217.12.1000, 7217.13.1000, 7217.19.1000, 7217.19.5000, 7217.22.5000, 7217.23.5000, 7217.29.1000, 7217.29.5000, 7217.32.5000, 7217.33.5000, 7217.39.1000, and 7217.39.5000. Included in this scope are flat-rolled products of non-rectangular cross-section where such cross-section is achieved subsequent to the rolling process (*i.e.*, products which have been worked after rolling)—for example, products which have been bevelled or rounded at the edges. Excluded from this scope are flat-rolled steel products either plated or coated with tin, lead, chromium, chromium oxides, both tin and lead (''terne plate''), or both chromium and chromium oxides (''tin-free steel''), whether or not painted, varnished or coated with plastics or other nonmetallic substances in addition to the metallic coating. Also excluded from this scope are clad products in straight lengths of 0.1875 inch or more in composite thickness and of a width which exceeds 150 millimeters and measures at least twice the thickness. Also excluded from this scope are certain clad stainless flat-rolled products, which are three-layered corrosion-resistant carbon steel flat-rolled products less than 4.75 millimeters in composite thickness that consist of a carbon steel flat-rolled product clad on both sides with stainless steel in a 20%–60%–20% ratio.

On September 22, 1999, the Department issued the final results of a changed circumstances review partially revoking the order with respect to certain corrosion-resistant steel.[2]

The HTS item numbers are provided for convenience and custom purposes. The written description remains dispositive.

Analysis of Comments Received

All issues raised in substantive responses by parties to this sunset review are addressed in the Issues and Decision Memorandum (''Decision Memo'') from Jeffrey A. May, Director, Office of Policy, Import Administration, to Robert S. LaRussa Assistant Secretary for Import Administration, dated March 29, 2000, which is hereby adopted by this notice. The issues discussed in the attached Decision Memo include the likelihood of continuation or recurrence of dumping and the magnitude of the margin likely to prevail were the order revoked. Parties can find a complete discussion of all issues raised in this review and the corresponding recommendations in this public memorandum which is on file in B–099, the Central Records Unit, of the main Commerce building.

In addition, a complete version of the Decision Memo can be accessed directly on the Web at www.ita.doc.gov/import admin/records/frn. The paper copy and electronic version of the Decision Memo are identical in content.

Final Results of Review

We determine that revocation of the antidumping duty order would be likely to lead to continuation or recurrence of dumping at the following percentage weighted-average margins:

Manufacturer/exporter	Margin (percent)
Thyssen	10.02
All others	10.02

This notice also serves as the only reminder to parties subject to administrative protective orders (APO) of their responsibility concerning the return or destruction of proprietary information disclosed under APO in accordance with 19 CFR 351.305 of the Department's regulations. Timely notification of the return or destruction of APO materials or conversion to judicial protective order is hereby requested. Failure to comply with the regulations and terms of an APO is a violation which is subject to sanction.

We are issuing and publishing this determination and notice in accordance with sections section 751(c), 752, and 777(i) of the Act.

Dated: March 29, 2000.

Joseph A. Spetrini,

Acting Assistant Secretary for Import Administration.

[FR Doc. 00–8554 Filed 4–5–00; 8:45 am]

BILLING CODE 3510–DS–P

[1] *See Extension of Time Limit for Final Results of Five-Year Reviews,* 64 FR 71726 (December 22, 1999).

[2] See Notice of Final Results of Changed Circumstances Antidumping Duty and Countervailing Duty Reviews and Revocation of Orders in Part: Certain Corrosion-Resistant Carbon Steel Flat Products From Germany, 64 FR 51292 (September 22, 1999). The Department noted that the affirmative statement of no interest by petitioners, combined with the lack of comments from interested parties, is sufficient to warrant partial revocation. This partial revocation applies to certain corrosion-resistant deep-drawing carbon steel strip, roll-clad on both sides with aluminum (AlSi) foils in accordance with St3 LG as to EN 10139/10140. The merchandise's chemical composition encompasses a core material of U St 23 (continuous casting) in which carbon is less than 0.08; manganese is less than 0.30; phosphorous is less than 0.20; sulfur is less than 0.015; aluminum is less than 0.01; and the cladding material is a minimum of 99% aluminum with silicon/copper/iron of less than 1%. The products are in strips with thicknesses of 0.07mm to 4.0mm (inclusive) and widths of 5mm to 800mm (inclusive). The thickness ratio of aluminum on either side of steel may range from 3%/94%/3% to 10%/80%/10%.

DEPARTMENT OF COMMERCE

International Trade Administration

[A–351–817; A–201–809]

Certain Cut-to-Length Carbon Steel Plate From Brazil and Mexico; Final Results of Antidumping Duty Expedited Sunset Reviews

AGENCY: Import Administration, International Trade Administration, Department of Commerce.

ACTION: Notice of final results of antidumping duty expedited sunset review: Certain cut-to-length carbon steel plate from Brazil and Mexico

SUMMARY: On September 1, 1999, the Department of Commerce (''the Department'') published the notice of initiation of sunset reviews of the antidumping duty orders on certain cut-to-length carbon steel plate (''cut-to-length plate'') from Brazil and Mexico. On the basis of notices of intent to participate and adequate substantive comments filed on behalf of domestic interested parties and inadequate response (in these cases, no response) from respondent interested parties, we determined to conduct expedited reviews. As a result of this review, we find that revocation of the antidumping duty orders would be likely to lead to continuation or recurrence of dumping at the levels listed below in the section entitled ''Final Results of Reviews.''

EFFECTIVE DATE: April 6, 2000.

FOR FURTHER INFORMATION CONTACT: Mark D. Young, Import Administration, International Trade Administration, U.S. Department of Commerce, Washington, DC 20230; telephone: (202) 482–6397.

SUPPLEMENTARY INFORMATION:

Statute and Regulations

This review is being conducted pursuant to sections 751(c) and 752 of the Tariff Act of 1930, as amended (''the Act''). The Department's procedures for the conduct of sunset reviews are set forth in Procedures for Conducting Five-year (''Sunset'') Reviews of Antidumping and Countervailing Duty Orders, 63 FR 13516 (March 20, 1998) *(''Sunset Regulations'')* and 19 CFR part 351 (1999) in general. Guidance on methodological or analytical issues relevant to the Department's conduct of sunset reviews is set forth in the Department's Policy Bulletin 98:3—Policies Regarding the Conduct of Five-year (''Sunset'') Reviews of Antidumping and Countervailing Duty Orders; Policy Bulletin, 63 FR 18871 (April 16, 1998) (''Sunset Policy Bulletin'').

Background

On September 1, 1999, the Department published the notice of initiation of sunset reviews of the antidumping duty orders on cut-to-length plate from Brazil and Mexico (63 FR 47767). The Department received Notices of Intent to Participate on behalf of Bethlehem Steel Corporation and U.S. Steel Group, a unit of USX Corporation (''the domestic producers''), within the deadline specified in section 351.218(d)(1)(i) of the *Sunset Regulations*. The domestic producers claimed interested party status under section 771(9)(C) of the Act, as U.S. manufacturers of cut-to-length plate. We received a complete substantive response, in both the Brazilian and Mexican reviews, from the domestic producers on October 1, 1999, within the 30-day deadline specified in the Sunset Regulations under section 351.218(d)(3)(i). In their substantive responses, the domestic producers stated that they were the petitioners in the original investigations of cut-to-length plate from Brazil and Mexico. Furthermore, the domestic producers stated that they had participated in each subsequent segment of the cases. We did not receive a substantive response from any respondent interested party to these proceedings. As a result, pursuant to 751(c)(3)(B) of the Act and 19 CFR 351.218(e)(1)(ii)(C) of the Department's Regulations, the Department determined to conduct expedited, 120-day, reviews of these orders.

In accordance with section 751(c)(5)(C)(v) of the Act, the Department may treat a review as extraordinarily complicated if it is a review of a transition order (i.e., an order in effect on January 1, 1995). The reviews at issue concern transition orders within the meaning of section 751(c)(6)(C)(ii) of the Act. Therefore, the Department determined that the sunset reviews of the antidumping duty orders on cut-to-length plate from Brazil and Mexico are extraordinarily complicated and extended the time limit for completion of the final results of these reviews until not later than March 29, 2000, in accordance with section 751(c)(5)(B) of the Act. [1]

Scope of Review

The products covered by these antidumping duty orders constitute one ''class or kind'' of merchandise: Certain cut-to-length carbon steel plate. These products include hot-rolled carbon steel universal mill plates (*i.e.,* flat-rolled products rolled on four faces or in a closed box pass, of a width exceeding 150 millimeters but not exceeding 1,250 millimeters and of a thickness of not less than 4 millimeters, not in coils and without patterns in relief), of rectangular shape, neither clad, plated nor coated with metal, whether or not painted, varnished, or coated with plastics or other nonmetallic substances; and certain hot-rolled carbon steel flat-rolled products in straight lengths, of rectangular shape, hot rolled, neither clad, plated, nor coated with metal, whether or not painted, varnished, or coated with plastics or other nonmetallic substances, 4.75 millimeters or more in thickness and of a width which exceeds 150 millimeters and measures at least twice the thickness, as currently classifiable in the United States Harmonized Tariff Schedule (''USHTS'') under item numbers 7208.31.0000, 7208.32.0000, 7208.33.1000, 7208.33.5000, 7208.41.0000, 7208.42.0000, 7208.43.0000, 7208.90.0000, 7210.70.3000, 7210.90.9000, 7211.11.0000, 7211.12.0000, 7211.21.0000, 7211.22.0045, 7211.90.0000, 7212.40.1000, 7212.40.5000 and 7212.50.0000. Included in this review are flat-rolled products of non-rectangular cross-section where such cross-section is achieved subsequent to the rolling process (*i.e.,* products which have been ''worked after rolling''); for example, products which have been beveled or rounded at the edges. Excluded from this review is grade X–70 plate. These USHTS item numbers are provided for convenience and customs purposes. The Department's written description remains dispositive.

The Department has made one scope ruling on the subject merchandise from Brazil. The following product was determined to be within the scope of the order:

Product within scope	Manufacturer	Citation
Profile Slabs	Companhia Siderurgica Tubarao	62 FR 30569, June 4, 1997.

[1] See Extension of Time Limit for Final Results of Five-Year Reviews, 64 FR 71726 (December 22, 1999).

These reviews cover all imports from all manufacturers and exporters of cut-to-length plate from Brazil and Mexico.

Analysis of Comments Received

All issues raised in these cases by parties to these sunset reviews are addressed in the ''Issues and Decision Memorandum'' (''Decision Memo'') from Jeffrey A. May, Director, Office of Policy, Import Administration, to Robert S. LaRussa, Assistant Secretary for Import Administration, dated March 29, 2000, which is hereby adopted by this notice. The issues discussed in the Decision Memo include the likelihood of continuation or recurrence of dumping and the magnitude of the margin likely to prevail were the orders revoked. Parties can find a complete discussion of all issues raised in these reviews and the corresponding recommendations in this public memorandum, which is on file in room B–099 of the Commerce Building.

In addition, a complete version of the Decision Memo can be accessed directly on the Web at www.ita.doc.gov/import admin/records/frn/. The paper copy and electronic version of the Decision Memo are identical in content.

Final Results of Reviews

We determine that revocation of the antidumping duty orders on cut-to-length plate from Brazil and Mexico would be likely to lead to continuation or recurrence of dumping at the following percentage weighted-average margins:

Brazilian manufacturers/exporters	Margin (percent)
Usinas Siderurgicas de Minas Gerais S.A. (''USIMINAS'')/ Companhia Siderurgica Paulista (''COSIPA'')	[2]42.08
All Others	75.54

Mexican manufacturers/exporters	Margin (percent)
Altos Hornos de Mexico	49.25
All Others	49.25

This notice also serves as the only reminder to parties subject to administrative protective orders (''APO'') of their responsibility concerning the return or destruction of proprietary information disclosed under APO in accordance with 19 CFR 351.305 of the Department's regulations. Timely notification of the return or destruction of APO materials or conversion to judicial protective order is hereby requested. Failure to comply with the regulations and terms of an APO is a violation which is subject to sanction.

We are issuing and publishing these results and notice in accordance with sections section 751(c), 752, and 777(i)(1) of the Act.

Dated: March 29, 2000.

Joseph A. Spetrini,

Acting Assistant Secretary for Import Administration.

[FR Doc. 00–8546 Filed 4–5–00; 8:45 am]

BILLING CODE 3510–DS–P

[2] In light of USIMINAS'' high level of ownership of COSIPA, common directors, and the fact the COSIPA is consolidated on USIMINAS'' financial statements, the Department collapsed USIMINAS and COSIPA into one entity for the purpose of calculating their dumping margin in the most recent administrative review. See Certain Cut-to-Length Carbon Steel Plate from Brazil; Final Results of Antidumping Duty Administrative Review, 63 FR 12744 (March 16, 1998). Therefore, we are reporting one margin for these companies; see decision memo for further discussion.

DEPARTMENT OF COMMERCE

International Trade Administration

[A–405–802, A–455–802, A–401–805]

Cut-to-Length Carbon Steel Plate From Finland, Poland, and Sweden; Final Results of Expedited Sunset Reviews

AGENCY: Import Administration, International Trade Administration, Department of Commerce.

ACTION: Notice of final results of expedited sunset reviews: Cut-to-length carbon steel plate from Finland, Poland, and Sweden.

SUMMARY: On September 1, 1999, the Department of Commerce (''the Department'') initiated sunset reviews of the antidumping duty orders on certain cut-to-length carbon steel plate (''CTL plate'') from Finland, Poland, and Sweden (64 FR 47767) pursuant to section 751(c) of the Tariff Act of 1930, as amended (''the Act''). On the basis of notices of intent to participate filed on behalf of domestic interested parties and inadequate response (in these cases, no response) from respondent interested parties, the Department determined to conduct expedited reviews. As a result of these reviews, the Department finds that revocation of the antidumping duty orders would likely lead to continuation or recurrence of dumping at the levels indicated in the Final Results of Reviews section of this notice.

EFFECTIVE DATE: April 6, 2000.

FOR FURTHER INFORMATION CONTACT: Darla D. Brown or Melissa G. Skinner, Office of Policy for Import Administration, International Trade Administration, U.S. Department of Commerce, 14th Street and Constitution Avenue, NW, Washington, DC 20230; telephone: (202) 482–3207 or (202) 482–1560, respectively.

SUPPLEMENTARY INFORMATION:

Applicable Statute and Regulations

Unless otherwise indicated, all citations to the Tariff Act of 1930, as amended (''the Act''), are references to the provisions effective January 1, 1995, the effective date of the amendments made to the Act by the Uruguay Round Agreements Act (''URAA''). In addition, unless otherwise indicated, all citations to the Department's regulations are to 19 CFR part 351 (1999) in general. Guidance on methodological or analytical issues relevant to the Department's conduct of sunset reviews is set forth in the Department's Policy Bulletin 98:3—*Policies Regarding the Conduct of Five-year (''Sunset'') Reviews of Antidumping and Countervailing Duty Orders; Policy Bulletin*, 63 FR 18871 (April 16, 1998) (''*Sunset Policy Bulletin*'').

Background

On September 1, 1999, the Department initiated a sunset review of the antidumping orders on CTL plate from Finland, Poland, and Sweden (64 FR 47767), pursuant to section 751(c) of the Act. On the basis of a notice to participate and adequate substantive response filed on behalf of a domestic interested party in each review, and inadequate response (in these cases, no response) from respondent interested parties, we determined to conduct expedited reviews. The Department has conducted these sunset reviews in accordance with sections 751 and 752 of the Act.

Scope

The products covered by these orders constitute one ''class or kind'' of merchandise: certain cut-to-length carbon steel plate. These products include hot-rolled carbon steel universal mill plates (*i.e.,* flat-rolled products rolled on four faces or in a closed box pass, of a width exceeding 150 millimeters but not exceeding 1,250 millimeters and of a thickness of not less than 4 millimeters, not in coils and without patterns in relief), of rectangular shape, neither clad, plated nor coated with metal, whether or not painted, varnished, or coated with plastics or other nonmetallic substances; and certain hot-rolled carbon steel flat-rolled products in straight lengths, of rectangular shape, hot rolled, neither clad, plated, nor coated with metal, whether or not painted, varnished, or coated with plastics or other

nonmetallic substances, 4.75 millimeters or more in thickness and of a width which exceeds 150 millimeters and measures at least twice the thickness, as currently classifiable in the Harmonized Tariff Schedule (HTS) under item numbers 7208.40.3030, 7208.40.3060, 7208.51.0030, 7208.51.0045, 7208.51.0060, 7208.52.0000, 7208.53.0000, 7208.90.0000, 7210.70.3000, 7210.90.9000, 7211.13.0000, 7211.14.0030, 7211.14.0045, 7211.90.0000, 7212.40.1000, 7212.40.5000, and 7212.50.0000. Included are flat-rolled products of non-rectangular cross-section where such cross-section is achieved subsequent to the rolling process (*i.e.,* products which have been ''worked after rolling'') for example, products which have been beveled or rounded at the edges. Excluded is grade X–70 plate. These HTS item numbers are provided for convenience and customs purposes. The written description remains dispositive.

The Department has conducted a changed circumstances review with respect to the order on CLT plate from Finland.[1] In the changed circumstances review, the Department revoked the order with regard to shipments of certain carbon cut-to-length steel plate with a maximum thickness of 80 mm in steel grades BS 7191, 355 EM and 355 EMZ, as amended by Sable Offshore Energy Project specification XB MOO Y 15 0001, types 1 and 2.

Analysis of Substantive Responses

All issues raised in the case and rebuttal briefs by parties to these sunset reviews are addressed in the ''Issues and Decision Memorandum'' (''Decision Memo'') from Jeffrey A. May, Director, Office of Policy, Import Administration, to Robert S. LaRussa, Assistant Secretary for Import Administration, dated March 29, 2000, which is hereby adopted by this notice. The issues discussed in the attached Decision Memo include the likelihood of continuation or recurrence of dumping and the magnitude of the margin likely to prevail were the orders revoked. Parties can find a complete discussion of all issues raised in these reviews and the corresponding recommendations in this public memorandum which is on file in room B–099 of the main Commerce building.

In addition, a complete version of the Decision Memo can be accessed directly on the Web at *www.ita.doc.gov/import admin/records/frn/*. The paper copy and electronic version of the Decision Memo are identical in content.

Final Results of Reviews

We determine that revocation of the antidumping duty orders on CTL plate from Finland, Poland, and Sweden would be likely to lead to continuation or recurrence of dumping at the following percentage weighted-average margins:

Manufacturer/Exporter	Margin (percent)
Finland	
Rautaruukki Oy	40.36
All Others	40.36
Poland	
All Polish Exporters	61.98
Sweden	
Svenskst Stal AB	24.23
All Others	24.23

This notice serves as the only reminder to parties subject to administrative protective order (''APO'') of their responsibility concerning the disposition of proprietary information disclosed under APO in accordance with 19 CFR 351.305 of the Department's regulations. Timely notification of return/destruction of APO materials or conversion to judicial protective order is hereby requested. Failure to comply with the regulations and the terms of an APO is a sanctionable violation.

These five-year (''sunset'') reviews and notices are in accordance with sections 751(c), 752, and 777(i)(1) of the Act.

Dated: March 29, 2000.

Joseph A. Spetrini,

Acting Assistant Secretary for Import Administration.

[FR Doc. 00–8548 Filed 4–5–00; 8:45 am]

BILLING CODE 3510–DS–P

[1] *See Certain Cut-to-Length Carbon Steel Plate from Finland, Germany and the United Kingdom: Final Results of Changed Circumstances Antidumping Duty and Countervailing Duty Reviews, and Revocation of Orders in Part,* 64 FR 46343 (August 25, 1999).

DEPARTMENT OF COMMERCE

International Trade Administration

[A–428–816]

Cut-to-Length Carbon Steel Plate From Germany; Final Results of Expedited Sunset Review of Antidumping Duty Order

AGENCY: Import Administration, International Trade Administration, Department of Commerce.

ACTION: Notice of final results of expedited sunset review: Cut-to-length carbon steel plate from Germany.

SUMMARY: On September 1, 1999, the Department of Commerce (''the Department'') published the notice of initiation of sunset review of the antidumping duty order on cut-to-length carbon steel plate from Germany (64 FR 47767), pursuant to section 751(c) of the Tariff Act of 1930, as amended (''the Act''). On the basis of a notice of intent to participate and adequate substantive response filed on behalf of domestic interested parties and a waiver of participation from respondent interested parties, we determined to conduct an expedited sunset review. Based on our analysis of the comments received, we find that revocation of the antidumping duty order would be likely to lead to continuation or recurrence of dumping at the levels listed below in the section entitled Final Results of the Review.

EFFECTIVE DATE: April 6, 2000.

FOR FURTHER INFORMATION CONTACT: Eun W. Cho or Melissa G. Skinner, Office of Policy for Import Administration, International Trade Administration, U.S. Department of Commerce, 14th Street and Constitution Avenue, NW, Washington, DC 20230; telephone: (202) 482–1698 or (202) 482–1560, respectively.

SUPPLEMENTARY INFORMATION:

The Applicable Statute

Unless otherwise indicated, all citations to the Act are references to the provisions effective January 1, 1995, the effective date of the amendments made to the Act by the Uruguay Round Agreements Act (''URAA''). In addition, unless otherwise indicated, all citations to the Department regulations are to 19 CFR part 351 (1999). Guidance on methodological or analytical issues relevant to the Department's conduct of sunset reviews is set forth in the Department Policy Bulletin 98:3—Policies Regarding the Conduct of Five-Year (''Sunset'') Reviews of Antidumping and Countervailing Duty Orders; Policy Bulletin, 63 FR 18871 (April 16, 1998) (Sunset Policy Bulletin).

Background

On September 1, 1999, the Department published the notice of initiation of sunset review of the antidumping duty order on cut-to-length carbon steel plate from Germany (64 FR 47767). We invited parties to comment. On the basis of a notice of intent to participate and adequate substantive response filed on behalf of domestic interested parties and of a waiver of participation from respondent interested parties, we determined to conduct an expedited sunset review. The

Department is conducting this sunset review in accordance with sections 751 and 752 of the Act.

In accordance with section 751(c)(5)(C)(v) of the Act, the Department may treat a review as extraordinarily complicated if it is a review of a transition order (*i.e.,* an order in effect on January 1, 1995). This review concerns a transition order within the meaning of section 751(c)(6)(C)(ii) of the Act. Therefore, on December 22, 1999, the Department determined that the sunset review of the antidumping duty order on cut-to-length carbon steel plate from Germany is extraordinarily complicated and extended the time limit for completion of the final results of this review until not later than March 29, 2000, in accordance with section 751(c)(5)(B) of the Act.[1]

Scope of Review

The product covered by this review is certain cut-to-length carbon steel plate from Germany. These products include hot-rolled carbon steel universal mill plates. (*i.e.,* flat-rolled products rolled on four faces or in a closed box pass, of a width exceeding 150 millimeters but not exceeding 1,250 millimeters and of a thickness of not less than 4 millimeters, not in coils and without patterns in relief), of rectangular shape, neither clad, plated nor coated with metal whether or not painted, varnished, or coated with plastics or other nonmetallic substances; and certain hot-rolled carbon steel flat-rolled products in straight lengths, of rectangular shape, hot rolled, neither clad, plated, nor coated with metal, whether or not painted, varnished, or coated with plastics or other nonmetallic substances, 4.75 millimeters or more in thickness and of a width which exceeds 150 millimeters and measures at least twice the thickness, as currently classifiable in the Harmonized Tariff Schedule (''HTS'') under item numbers 7208.40.3030, 7208.40.3060, 7208.51.0030, 7208.51.0045, 7208.51.0060, 7208.52.0000, 7208.53.0000, 7208.90.0000, 7210,70.3000, 7210.90.9000, 7211.13.0000, 7211.14.0030, 7211.14.0045, 7211.90.000, 7212.40.1000, 7212.40.5000, and 7212.50.0000. Included are flat-rolled products of non-rectangular cross-section where such cross-section is achieved subsequent to the rolling process (*i.e.,* products which have been worked after rolling) for example, product which have been beveled or rounded at the edges. Excluded is grade X–70 plate.

On August 25, 1999, the Department issued the final results of a changed-circumstances review partially revoking the order with respect to certain carbon cut-to-length steel plate with a maximum thickness of 80 mm in steel grades BS 7191,355 EM and 355 EMZ, as amended by Sable Offshore Energy Project Specification XB MOO Y 15 0001, types 1 and 2.[2]

The HTS item numbers are provided for convenience and custom purposes. The written description remains dispositive.

Analysis of Comments Received

All issues raised in substantive responses by parties to this sunset review are addressed in the Issues and Decision Memorandum (''Decision Memo'') from Jeffrey A. May, Director, Office of Policy, Import Administration, to Robert S. LaRussa, Assistant Secretary for Import Administration, dated March 29, 2000, which is hereby adopted by this notice. The issues discussed in the attached Decision Memo include the likelihood of continuation or recurrence of dumping and the magnitude of the margin likely to prevail were the order revoked. Parties can find a complete discussion of all issues raised in this review and the corresponding recommendations in this public memorandum which is on file in B–099, the Central Records Unit, of the main Commerce building.

In addition, a complete version of the Decision Memo can be accessed directly on the Web at www.ita.doc.gov/import admin/records/frn. The paper copy and electronic version of the Decision Memo are identical in content.

Final Results of Review

We determine that revocation of the antidumping duty order would be likely to lead to continuation or recurrence of dumping at the following percentage weighted-average margins:

Manufacturer/ exporter	Margin (percent)
Dillinger	36.00
All others	36.00

This notice also serves as the only reminder to parties subject to administrative protective orders (''APO'') of their responsibility concerning the return or destruction of proprietary information disclosed under APO in accordance with 19 CFR 351.305 of the Department's regulations. Timely notification of the return or destruction of APO materials or conversion to judicial protective order is hereby requested. Failure to comply with the regulations and terms of an APO is a violation which is subject to sanction.

We are issuing and publishing this determination and notice in accordance with sections 751(c), 752, and 777(i) of the Act.

Dated: March 29, 2000.

Joseph A. Spetrini,

Acting Assistant Secretary for Import Administration.

[FR Doc. 00–8551 Filed 4–5–00; 8:45 am]

BILLING CODE 3510–DS–M

[1] See Extension of Time Limit for Final Results of Five-Year Reviews, 64 FR 71726 (December 22, 1999).

[2] See Certain Cut-to-Length Carbon Steel Plate from Finland, Germany, and United Kingdom: Final Results of Changed Circumstances Antidumping Duty and Countervailing Duty Reviews, and Revocation of Orders in Part, 64 FR 46343 (August 25, 1999).

DEPARTMENT OF COMMERCE

International Trade Administration

[A–469–803], [A–412–814]

Certain Cut-to-Length Carbon Steel Plate From Spain and the United Kingdom; Final Results of Expedited Sunset Reviews

AGENCY: Import Administration, International Trade Administration, Department of Commerce.

ACTION: Notice of final results of expedited sunset reviews.

SUMMARY: On September 1, 1999, the Department of Commerce published the notice of initiation of sunset reviews of the antidumping duty orders on certain cut-to-length carbon steel plate (''CTL plate'') from Spain and the United Kingdom. On the basis of a notice of intent to participate and adequate substantive response filed on behalf of domestic interested parties, and inadequate response (in these cases no response) from respondent interested parties, we determined to conduct expedited sunset reviews. Based on our analysis of the substantive comments received, we find that revocation of these antidumping duty orders would be likely to lead to continuation or recurrence of dumping at the levels listed below in the section entitled ''Final Results of the Review.''

EFFECTIVE DATE: April 6, 2000.

FOR FURTHER INFORMATION CONTACT: Martha V. Douthit or Melissa G. Skinner, Office of Policy for Import Administration, International Trade Administration, U.S. Department of Commerce, Washington, D.C. 20230;

telephone: (202) 482–5050 or (202) 482–1560, respectively.

SUPPLEMENTARY INFORMATION:

Statute and Regulations

Unless otherwise indicated, all citations to the Tariff Act of 1930, as amended (''the Act''), are references to the provisions effective January 1, 1995, the effective date of the amendments made to the Act by the Uruguay Round Agreements Act (''URAA''). In addition, unless otherwise indicated, all citations to the Department of Commerce's (''the Department's'') regulations are to 19 CFR part 351 (1999). Guidance on methodological or analytical issues relevant to the Department's conduct of sunset reviews is set forth in the Department's Policy Bulletin 98:3—*Policies Regarding the Conduct of Five-year (''Sunset'') Reviews of Antidumping and Countervailing Duty Orders; Policy Bulletin,* 63 FR 18871 (April 16, 1998) (''*Sunset Policy Bulletin*'').

Background

On September 1, 1999, the Department of Commerce published the notice of initiation of sunset reviews on the antidumping duty orders on CTL plate from Spain and the United Kingdom (64 FR 47767). We invited parties to comment. On the basis of a notice of intent to participate and adequate substantive responses filed on behalf of domestic interested parties, and inadequate response (in these cases no response) from respondent interested parties, we determined to conduct expedited sunset reviews. The Department has conducted these sunset reviews in accordance with sections 751 and 752 of the Act.

In accordance with section 751(c)(5)(C)(v) of the Act, the Department may treat a review as extraordinarily complicated if it is a review of a transition order (*i.e.* an order in effect on January 1, 1995). These reviews concern transition orders within the meaning of section 751(c)(6)(C)(ii) of the Act. Therefore, on December 22, 1999, the Department determined that the sunset reviews on the antidumping duty orders on CTL plate from Spain and the United Kingdom are extraordinarily complicated and extended the time limit for completion of the final results of these reviews until not later than March 29, 2000, in accordance with section 751(c)(5)(B) of the Act.[1]

[1] *Extension of Time Limit for Final Results of Expedited Five-Year Reviews,* 64 FR 71726 (December 22, 1999).

Scope of Review

The merchandise covered by these orders is certain CTL plate from Spain and the United Kingdom. The merchandise includes hot-rolled carbon steel universal mill plates (*i.e.,* flat-rolled products rolled on four faces or in a closed box pass, of a width exceeding 150 millimeters but not exceeding 1,250 millimeters and of a thickness of not less than 4 millimeters, not in coils and without patterns in relief), of rectangular shape, neither clad, plated nor coated with metal, whether or not painted, varnished, or coated with plastics or other nonmetallic substances; and certain hot-rolled carbon steel flat-rolled products in straight lengths, of rectangular shape, hot rolled, neither clad, plated, nor coated with metal, whether or not painted, varnished, or coated with plastics or other nonmetallic substances, 4.75 millimeters or more in thickness and of a width which exceeds 150 millimeters and measures at least twice the thickness as currently classifiable in the Harmonized Tariff Schedule (''HTS'') under item numbers 7208.40.3030, 7208.40.3060, 7208.51.0030, 7208.51.0045, 7208.51.0060, 7208.52.0000, 7208.53.0000, 7208.90.0000, 7210.70.3000, 7210.90.9000, 7211.13.0000, 7211.14.0030, 7211.14.0045, 7211.90.0000, 7212.40.1000, 7212.40.5000, and 7212.50.0000. Included are flat-rolled products of non-rectangular cross-section where such cross-section is achieved subsequent to the rolling process (*i.e.,* products which have been ''worked after rolling'')—for example, products which have been beveled or rounded at the edges. Excluded is grade X–70 plate. These HTS item numbers are provided for convenience and customs purposes. The written description remains dispositive.

As a result of a changed circumstance review with respect to the United Kingdom, the order was revoked for shipments of CTL plate with a maximum thickness of 80 mm in steel grades BS 7191, 355 EMZ, as amended by Sable Offshore Energy Project specification XB MOO Y 15 0001, types 1 and 2 (*see* 64 FR 46343 (August 25, 1999)).

Analysis of Comments Received

All issues raised in the substantive responses by parties to these sunset reviews are addressed in the ''Issues and Decision Memorandum'' (''Decision Memo'') from Jeffrey A. May, Director, Office of Policy, Import Administration, to Robert S. LaRussa, Assistant Secretary for Import Administration, dated March 29, 2000, which is hereby adopted by this notice. The issues discussed in the attached Decision Memo include the likelihood of continuation or recurrence of dumping and the magnitude of the margin likely to prevail were the orders revoked. Parties can find a complete discussion of all issues raised in these reviews and the corresponding recommendations in this public memorandum which is on file in the Department's Central Record Units, Room B–099.

In addition, a complete version of the Decision Memo can be accessed directly on the Web at www.ita.doc.gov/import admin/records/frn. The paper copy and electronic version of the Decision Memo are identical in content.

Final Results of Reviews

We determine that revocation of the antidumping duty orders would be likely to lead to continuation or recurrence of dumping at the following percentage weighted-average margins:

Manufacturers/producers	Margin (percent)
Spain:	
Empresa Nacional Siderurgica, S.A. (''Ensidesa'')	105.61
All Others	105.61
United Kingdom:	
British Steel plc	109.22
All Others	109.22

This notice also serves as the only reminder to parties subject to administrative protective orders (''APO'') of their responsibility concerning the return or destruction of proprietary information disclosed under APO in accordance with 19 CFR 351.305 of the Department's regulations. Timely notification of the return or destruction of APO materials or conversions to judicial protective order is hereby requested. Failure to comply with the regulations and terms of an APO is a violation which is subject to sanction.

We are issuing and publishing this determination and notice in accordance with sections section 751(c), 752, and 777(i) of the Act.

Dated: March 29, 2000.

Joseph A. Spetrini,

Acting Assistant Secretary for Import Administration.

[FR Doc. 00–8557 Filed 4–5–00; 8:45 am]

BILLING CODE 3510–DS–P

DEPARTMENT OF COMMERCE

International Trade Administration

Extension of Time Limit for Final Results of Expedited Five-Year Reviews

AGENCY: Import Administration, International Trade Administration, Department of Commerce.

ACTION: Notice of extension of time limit for final results of expedited five-year (''Sunset'') reviews.

SUMMARY: The Department of Commerce (''the Department'') is extending the time limit for the final results of five expedited sunset reviews initiated on December 1, 1999 (64 FR 67247), covering various antidumping duty orders. Based on adequate responses from domestic interested parties and inadequate responses from respondent interested parties, the Department is conducting expedited sunset reviews to determine whether revocation of the antidumping duty orders would be likely to lead to continuation or recurrence of dumping. As a result of these extensions, the Department intends to issue its final results not later than June 28, 2000.

EFFECTIVE DATE: April 6, 2000.

FOR FURTHER INFORMATION CONTACT: Mark D. Young, Import Administration, International Trade Administration, U.S. Department of Commerce, 14th Street and Constitution Avenue, NW, Washington, DC 20230; telephone: (202) 482–6397.

Extension of Final Results

In accordance with section 751(c)(5)(C)(v) of the Tariff Act of 1930, as amended (''the Act''), the Department may treat a sunset review as extraordinarily complicated if it is a review of a transition order (*i.e.,* an order in effect on January 1, 1995). The reviews at issue concern transition orders within the meaning of section 751(c)(6)(C)(ii) of the Act. The Department has determined that the sunset reviews of the following antidumping duty orders are extraordinarily complicated:

A–588–831 Grain-Oriented Electrical Steel from Japan
A–475–811 Grain-Oriented Electrical Steel from Italy
A–570–831 Fresh Garlic from the People's Republic of China
A–570–826 Paper Clips from the People's Republic of China
A–570–827 Cased Pencils from the People's Republic of China

Therefore, the Department is extending the time limit for completion of the final results of these reviews until not later than June 28, 2000, in accordance with section 751(c)(5)(B) of the Act.

Dated: March 30, 2000.

Robert S. LaRussa,

Assistant Secretary for Import Administration.

[FR Doc. 00–8561 Filed 4–5–00; 8:45 am]

BILLING CODE 3510–DS–P

DEPARTMENT OF COMMERCE

International Trade Administration

[A–533–809, A–583–821]

Certain Forged Stainless Steel Flanges From India and Taiwan; Final Results of Antidumping Duty Expedited Sunset Reviews

AGENCY: Import Administration, International Trade Administration, Department of Commerce.

ACTION: Notice of final results of antidumping duty expedited sunset reviews: Certain forged stainless steel flanges from India and Taiwan.

SUMMARY: On December 1, 1999, the Department of Commerce (''the Department'') published the notice of initiation of sunset reviews of the antidumping duty orders on forged stainless steel flanges (''flanges'') from India and Taiwan. The products covered by these orders are flanges, both finished and unfinished. On the basis of notices of intent to participate and adequate substantive comments filed on behalf of domestic interested parties and inadequate response from Indian respondent interested parties and no response from Taiwanese respondent interested parties, we determined to conduct expedited reviews. Based on our analysis of the comments received, we find that revocation of the antidumping duty orders would be likely to lead to continuation or recurrence of dumping at the levels listed below in the section entitled ''Final Results of Reviews.''

EFFECTIVE DATE: April 6, 2000.

FOR FURTHER INFORMATION CONTACT: Mark D. Young, Import Administration, International Trade Administration, U.S. Department of Commerce, Washington, DC 20230; telephone: (202) 482–6397.

SUPPLEMENTARY INFORMATION:

Statute and Regulations

Unless otherwise indicated, all citations to the Tariff Act of 1930, as amended (''the Act''), are references to the provisions effective January 1, 1995, the effective date of the amendments made to the Act by Uruguay Round Agreements Act (''URAA''). In addition, unless otherwise indicated, all citations to the Department of Commerce's (''the Department's'') regulations are to 19 CFR part 351 (1999). Guidance on methodological or analytical issues relevant to the Department's conduct of sunset reviews is set forth in the Department's Policy Bulletin 98:3—Policies Regarding the Conduct of Five-year (''Sunset'') Reviews of Antidumping and Countervailing Duty Orders; Policy Bulletin, 63 FR 18871 (April 16, 1998) (''Sunset Policy Bulletin'').

Background

On December 1, 1999, the Department published the notice of initiation of sunset reviews of the antidumping duty orders on flanges from India and Taiwan (64 FR 67247). We received a Notice of Intent to Participate, in each of the two sunset reviews, on behalf of Gerlin, Inc. (''Gerlin''), Ideal Forging Corporation (''Ideal''), Maass Flange Corporation (''Maass''), and Westbrook Flange (collectively, the ''domestic interested parties''), by December 16, 1999, within the deadline specified in section 351.218(d)(1)(i) of the Sunset Regulations. Pursuant to section 771(9)(C) of the Act, the domestic interested parties claimed interested party status as U.S. manufacturers of domestic like products. Moreover, Gerlin, Ideal, and Maass claim that they were petitioners in the original investigations.

The Department received a complete substantive response from the domestic interested parties, in each of the two sunset reviews, by January 3, 2000, within the 30-day deadline specified in the Sunset Regulations under section 351.218(d)(3)(i). We did not receive a substantive response from any Taiwanese respondent interested party. We did receive substantive responses from Echjay Forgings Limited and Pushpaman Exports in the sunset review of the Indian order. However, we determined that the responses were inadequate to warrant a full review because respondents did not account for at least 50 percent of the subject merchandise to the U.S. over the last five years, as required by 351.218(e)(1)(ii)(A).[1] As a result, pursuant to 19 CFR 351.218(e)(1)(ii)(C), the Department determined to conduct expedited, 120-day, reviews of these orders.

[1] See Policies Regarding the Conduct of Five-Year (''Sunset'') Reviews of Antidumping and Countervailing Duty Orders: Policy Bulletin, 63 FR 18871 (April 16, 1998).

Scope of Review

The merchandise subject to these orders is certain forged stainless steel flanges (''flanges''), both finished and unfinished, generally manufactured to specification ASTM A–182, and made in alloys such as 304, 304L, 316, and 316L. The scope includes five general types of flanges. They are weld neck, used for butt-weld line connection; threaded, used for threaded line connections; slip-on and lap joint, used with stub-ends/butt-weld line connections; socket weld, used to fit pipe into a machined recession; and blind, used to seal off a line. The sizes of the flanges within the scope range generally from one to six inches; however, all sizes of the above-described merchandise are included in the scope. Specifically excluded from the scope of these orders are cast stainless steel flanges. Cast stainless steel flanges generally are manufactured to specification ASTM A–351. The flanges subject to these orders are currently classifiable under subheadings 7307.21.1000 and 7307.21.5000 of the Harmonized Tariff Schedule of the United States (''HTSUS''). Although the HTSUS subheading is provided for convenience and customs purposes, the written description of the subject merchandise remains dispositive.

These reviews cover imports from all manufacturers and exporters of flanges from India and Taiwan.

Analysis of Comments Received

All issues raised in the case by parties to these sunset reviews are addressed in the ''Issues and Decision Memorandum'' (''Decision Memo'') from Jeffrey A. May, Director, Office of Policy, Import Administration, to Robert S. LaRussa, Assistant Secretary for Import Administration, dated March 30, 2000, which is hereby adopted by this notice. The issues discussed in the attached Decision Memo include the likelihood of continuation or recurrence of dumping and the magnitude of the margin likely to prevail were the orders to be revoked. Parties can find a complete discussion of all issues raised in these reviews and the corresponding recommendations in this public memorandum which is on file in room B–099 in the main Commerce Building.

In addition, a complete version of the Decision Memo can be accessed directly on the Web at www.ita.doc.gov/import admin/records/frn/. The paper copy and electronic version of the Decision Memo are identical in content.

Final Results of Reviews

We determine that revocation of the antidumping duty orders on flanges from India and Taiwan would be likely to lead to continuation or recurrence of dumping at the following percentage weighted-average margins:

Manufacturer/exporter	Margin (percent)
India:	
Mukand, Ltd.	210.00
Sunstar Metals Ltd.	210.00
Bombay Forgings Pvt. Ltd.	210.00
Dynafore	210.00
Akai Impex Pvt. Ltd.	18.56
All Others	162.14
Taiwan:	
Enlin Steel Corporation	48.00
Ta Chen Stainless Pipe Co.	48.00
Tay Precision Industries Co.	48.00
All Others	48.00

This notice also serves as the only reminder to parties subject to administrative protective orders (''APO'') of their responsibility concerning the return or destruction of proprietary information disclosed under APO in accordance with 19 CFR 351.305 of the Department's regulations. Timely notification of the return or destruction of APO materials or conversion to judicial protective order is hereby requested. Failure to comply with the regulations and terms of an APO is a violation which is subject to sanction.

We are issuing and publishing these determinations and notice in accordance with sections 751(c), 752, and 777(i)(1) of the Act.

Dated: March 30, 2000.

Robert S. LaRussa,

Assistant Secretary for Import Administration.

[FR Doc. 00–8560 Filed 4–5–00; 8:45 am]

BILLING CODE 3510–DS–P

DEPARTMENT OF COMMERCE

International Trade Administration

[A–570–840]

Manganese Metal From the People's Republic of China; Notice of Extension of Time Limit for Administrative Review

AGENCY: Import Administration, International Trade Administration, Department of Commerce.

ACTION: Notice of extension of time limit.

SUMMARY: The Department of Commerce is extending the time limit for the final results of the third review of the antidumping duty order on manganese metal from the People's Republic of China. The period of review is February 1, 1998 through January 31, 1999. This extension is made pursuant to section 751(a)(3)(A) of the Tariff Act of 1930, as amended by the Uruguay Round Agreements Act.

EFFECTIVE DATE: April 6, 2000.

FOR FURTHER INFORMATION CONTACT: Greg Campbell or Cynthia Thirumalai, Office 1, Import Administration, International Trade Administration, U.S. Department of Commerce, 14th Street and Constitution Avenue, NW, Washington DC 20230; telephone (202) 482–2239 or 482–4087, respectively.

SUPPLEMENTARY INFORMATION: Due to resource constraints, it is not practicable to complete this review within the time limit mandated by section 751(a)(3)(A) of the Tariff Act of 1930, as amended (''the Act'') (*i.e.,* April 7, 2000). The Department of Commerce (''Department'') is, therefore, extending the time limit for completion of the final results to not later than May 3, 2000.

This administrative review and notice are in accordance with section 751(a)(1) of the Act (19 U.S.C. 1675 (a)(1)) and 19 CFR 351.213(h)(2).

Dated: March 31, 2000.

Richard W. Moreland,

Deputy Assistant Secretary for AD/CVD Enforcement.

[FR Doc. 00–8566 Filed 4–5–00; 8:45 am]

BILLING CODE 3510–DS–P

DEPARTMENT OF COMMERCE

International Trade Administration

[A–570–804]

Sparklers From the People's Republic of China: Preliminary Results of Antidumping Duty Administrative Review

AGENCY: Import Administration, International Trade Administration, Department of Commerce.

ACTION: Notice of preliminary results of antidumping duty administrative review.

SUMMARY: In response to a request by the petitioner, Diamond Sparkler Company (''Diamond''), the Department of Commerce (''the Department'') is conducting an administrative review of the antidumping duty order on sparklers from the People's Republic of China (''PRC''). The review covers three manufacturers/exporters of this merchandise to the United States, Guangxi Native Produce Import & Export Corporation, Beihai Fireworks and Firecrackers Branch (''Guangxi''); Hunan Provincial Firecrackers & Fireworks Import & Export (Holding)

Corporation, Liling City Fireworks Bomb Fty. (''Hunan''); and Jiangxi Native Produce Import & Export Corporation, Guangzhou Fireworks Company (''Jiangxi'') (collectively ''the respondents''). The period covered is June 1, 1998, through May 31, 1999. As a result of the review, the Department has preliminarily determined that dumping margins exist for the respondents for the covered period.

We invite interested parties to comment on these preliminary results. Parties who submit argument in this proceeding are requested to submit with the argument (1) a statement of the issue and (2) a brief summary of the arguments.

EFFECTIVE DATE: April 6, 2000.

FOR FURTHER INFORMATION CONTACT: Paige Rivas or Nithya Nagarajan, Antidumping/Countervailing Duty Enforcement, Office IV, Group II , Import Administration, International Trade Administration, U.S. Department of Commerce, 14th Street and Constitution Avenue, NW, Washington, DC 20230; telephone: (202) 482–0651 or 482–5253, respectively.

Applicable Statute and Regulations

Unless otherwise indicated, all citations to the Tariff Act of 1930, as amended (''the Act''), are references to the provisions effective January 1, 1995, the effective date of the amendments made to the Act by the Uruguay Round Agreements Act (''URAA''). In addition, all references to the Department's regulations are to 19 CFR part 351 (April 1999).

Background

On June 18, 1991, the Department published in the **Federal Register** the antidumping duty order on sparklers from the PRC, *see, Antidumping Duty Order: Sparklers from the People's Republic of China,* 56 FR 27946 (June 18, 1991), as amended by *from the People's Republic of China: Adverse Decision and Amendment to Final Determination of Sales at Less Than Fair Value and Antidumping Duty Order in Accordance with Decision on Remand,* 58 FR 40624 (July 29, 1993). On June 9, 1999, the Department published in the **Federal Register** a notice of opportunity to request an administrative review of the antidumping duty order on sparklers from the PRC covering the period June 1, 1998, through May 31, 1999. *Antidumping and Countervailing Duty Order, Finding or Suspended Investigation: Opportunity to Request Administrative Review,* 64 FR 30962 (June 9, 1999). On June 30, 1999, the petitioner requested, in accordance with 19 CFR § 351.213, that we conduct an administrative review of exports to the United States by three manufacturers/exporters of sparklers from the PRC. We published a notice of initiation of this antidumping duty administrative review on July 29, 1999. *Notice of Initiation of Antidumping and Countervailing Duty Administrative Reviews and Requests for Revocation in Part,* 64 FR 41074 (July 29, 1999).

Under section 751(a)(3)(A) of the Act, the Department may extend the deadline for issuing a preliminary determination in an administrative review if it determines that it is not practicable to complete the preliminary review within the statutory time limit of 245 days. On March 7, 2000, the Department published a notice of extension of the time limit for the preliminary results in this case to March 31, 2000. *See Sparklers from the People's Republic of China: Time Limit,* 65 FR 11985 (March 7, 2000).

The Department is now conducting that review in accordance with section 751 of the Act.

Period of Review

The period of review (POR) is June 1, 1998 through May 31, 1999.

Scope of Review

The products covered by this administrative review are sparklers from the People's Republic of China. Sparklers are fireworks, each comprising a cut-to-length wire, one end of which is coated with a chemical mix that emits bright sparks while burning. Sparklers are currently classifiable under subheading 3604.10.00 of Harmonized Tariff Schedules (''HTS''). The HTS subheadings are provided for convenience and customs purposes. The written description remains dispositive as to the scope of this proceeding.

Separate Rates Determination

In previous reviews, the Department has treated the PRC as a non-market economy (''NME'') country. We have no evidence suggesting that this determination should be changed. Accordingly, the Department has determined that NME treatment is appropriate in this review. See 19 U.S.C. 1677(18)(c)(i).

To establish whether a company operating in a NME is sufficiently independent to be entitled to a separate rate, the Department analyzes each exporting entity under the test established in the *Final Determination of Sales at Less Than Fair Value: Sparklers from the People's Republic of China,* 56 FR 20588 (May 6, 1991) (''*Sparklers*''), as amplified by the *Final Determination of Sales at Less Than Fair Value: Silicon Carbide from the People's Republic of China,* 59 FR 22585 (May 2, 1994) (''*Silicon Carbide*''). Under this test, NMEs are entitled to separate, company-specific margins when they can demonstrate an absence of government control, both in law and in fact, with respect to export activities. *Sparklers,* 56 FR at 20589. Evidence supporting, though not requiring, a finding of *de jure* absence of government control over export activities includes: (1) An absence of restrictive stipulations associated with the individual exporter's business and export licenses; (2) any legislative enactments decentralizing control of companies; and (3) any other formal measures by the government decentralizing control of companies. *Id. De facto* absence of government control over exports is based on four factors: (1) Whether each exporter sets its own export prices independent of the government and without the approval of a government authority; (2) whether each exporter retains the proceeds from its sales and makes independent decisions regarding the disposition of profits or financing of losses; (3) whether each exporter has the authority to negotiate and sign contracts and other agreements; and (4) whether each exporter has autonomy from the government regarding the selection of management. *See Silicon Carbide,* 59 FR at 22587.

In the instant review, none of the three respondents named above submitted responses to the separate rates section of the Department's questionnaire. We therefore preliminarily determine that these companies did not establish their entitlement to a separate rate.

Use of Facts Otherwise Available

On October 14, 1999, the Department sent each of the respondents a questionnaire and cover letter, explaining the review procedures, by air mail through FedEx International Airway Bill. A response to the questionnaire, which covered exports to the United States for the period of review, was due by November 27, 1999. We did not receive responses by the due date. On January 12, 2000, we sent a follow-up letter regarding the past due dates for the questionnaire responses and noting the necessity of relying on facts available. Because we have received no responses and have not been contacted by the respondents, we determine that the use of facts available is appropriate.

Section 776(a)(2) of the Act provides that ''if an interested party or any other person (A) withholds information that has been requested by the administering authority; (B) fails to provide such information by the deadlines for the submission of the information or in the form and manner requested, subject to subsections (c)(1) and (e) of section 782; (C) significantly impedes a proceeding under this title; or (D) provides such information but the information cannot be verified as provided in section 782(i), the administering authority shall, subject to section 782(d), use the facts otherwise available in reaching the applicable determination under this title.''

Because all three respondents have failed to respond to the original questionnaires and have refused to participate in this administrative review, we find that, in accordance with sections 776(a)(2)(A) and (C) of the Act, the use of total facts available is appropriate. *See, e.g., Notice of Final Determination of Sales at Less Than Fair Value: Persulfates from The People's Republic of China,* 62 FR 27222, 27224 (May 19, 1997); and *Certain Grain-Oriented Electrical Steel From Italy: Final Results of Antidumping Duty Administrative Review,* 62 FR 2655 (Jan. 17, 1997) (for a more detailed discussion, *see Certain Grain-Oriented Electrical Steel From Italy: Preliminary Results of Antidumping Duty Administrative Review,* 61 FR 36551, 36552 (July 4, 1996)) (*Grain-Oriented Electrical Steel from Italy*).

Section 776(b) of the Act provides that, if the Department finds that an interested party ''has failed to cooperate by not acting to the best of its ability to comply with a request for information,'' the Department may use information that is adverse to the interests of the party as facts otherwise available. Adverse inferences are appropriate ''to ensure that the party does not obtain a more favorable result by failing to cooperate than if it had cooperated fully.'' *See* Statement of Administrative Action (''SAA'') accompanying the URAA, H.R. Doc. No. 103–316, at 870 (1994). Furthermore, ''an affirmative finding of bad faith on the part of the respondent is not required before the Department may make an adverse inference.'' *See Antidumping Duties; Countervailing Duties: Final Rule*, 62 FR 27296, 27340 (May 19, 1997) (Final Rule). Section 776(b) of the Act authorizes the Department to use as adverse facts available information derived from the petition, the final determination from the less than fair value (''LTFV'') investigation, a previous administrative review, or any other information placed on the record.

Under section 782(c) of the Act, a respondent has a responsibility not only to notify the Department if it is unable to provide requested information, but also to provide a ''full explanation and suggested alternative forms.'' The respondents failed to respond to our requests for information, thereby failing to comply with this provision of the statute. Therefore, we determine that respondents failed to cooperate to the best of their ability, making the use of an adverse inference appropriate. In this proceeding, in accordance with Department practice, as adverse facts available we have preliminarily assigned the respondents the rate of 93.54 percent, which is the highest margin determined in any segment of this proceeding. *See Extruded Rubber Thread from Malaysia: Final Results of Antidumping Duty Administrative Review*, 65 FR 6140,6141 (February 8, 2000) (*Extruded Rubber Thread from Malaysia*). As adverse facts available, the Department uses the highest rate ever determined for any respondent in any segment of the proceeding because it assumes that if a respondent could demonstrate that its actual margins were lower, it would participate in the review and do so. *See Rhone Poulenc, Inc.* v. *United States*, 899 F.2d 1185, 1190–91 (Fed. Cir. 1990). Moreover, respondents are not benefitting by their failure to cooperate because they are receiving the highest rate ever calculated, which is higher than the petition rate. Furthermore, we have no evidence that indicates any other rate is appropriate.

Section 776(c) of the Act provides that where the Department selects from among the facts otherwise available and relies on ''secondary information,'' the Department shall, to the extent practicable, corroborate that information from independent sources reasonably at the Department's disposal. Secondary information is described in the SAA as ''[i]nformation derived from the petition that gave rise to the investigation or review, the final determination concerning the subject merchandise, or any previous review under section 751 concerning the subject merchandise.'' *See* SAA at 870. The SAA states that ''corroborate'' means to determine that the information used has probative value. *See id.* To corroborate secondary information, the Department will, to the extent practicable, examine the reliability and relevance of the information to be used. A respondent's own current rate has probative value. In this case, respondents already are subject to a PRC-wide cash deposit rate of 93.54 percent. It is reasonable to assume that if they could have demonstrated that their actual dumping margins are lower, they would have participated in this review and attempted to do so.

In addition, unlike other types of information, such as input costs or selling expenses, there are no independent sources for calculated dumping margins. The only source for margins is administrative determinations. Thus, in an administrative review, if the Department chooses as total adverse facts available a calculated dumping margin from a prior segment of the proceeding, it is not necessary to question the reliability of the margin for that time period. *See Grain-Oriented Electrical Steel from Italy*, 61 FR at 36552. Also, with respect to the relevance aspect of corroboration, the Department will consider information reasonably at its disposal to determine whether a margin has relevance. In this case, if any of the respondents could have demonstrated its actual margins were lower (and that it qualifies for a separate rate), we presume it would have done so. Further, assigning a lower rate would reward these exporters for their failure to cooperate. Thus, these exporters' own current rate is relevant.

We also note that the Department will disregard the margin and determine an appropriate margin where circumstances indicate that the selected margin is not appropriate as adverse facts available. For example, in *Fresh Cut Flowers from Mexico: Final Results of Antidumping Administrative Review*, 61 FR 6812 (February 22, 1996), the Department disregarded the highest margin in that case as adverse best information available (the predecessor to facts available) because the margin was based on another company's uncharacteristic business expense resulting in an unusually high margin. Similarly, the Department does not apply a margin that has been discredited. *See D & L Supply Co.* v. *United States*, 113 F.3d 1220, 1221 (Fed. Cir. 1997) (the Department will not use a margin that has been judicially invalidated); *see also Borden Inc.* v. *United States*, 4 F. Supp. 2d 1221, 1246–48 (CIT 1998) (the Department may not use an uncorroborated petition margin that is high when compared to calculated margins for the period of review). None of these unusual circumstances are present here. Moreover, there is no evidence on the record indicating that the selected margin is not appropriate as adverse facts available.

Suspension of Liquidation

As a result of our review, we preliminarily determine that the following margin exists for the period June 1, 1998, through May 31, 1999:

Exporter/manufacturer	Weighted-average margin percentage
PRC-wide	93.54

Cash Deposit

The following cash deposit requirements will be effective upon publication of the final results of this administrative review for all shipments of the subject merchandise entered, or withdrawn from warehouse, for consumption on or after the publication date, as provided for by section 751(a)(1) of the Act: (1) For previously reviewed or investigated companies that have a separate rate and for which no review was requested, the cash deposit rate will continue to be the company-specific rate published for the most recent period; (2) for all other PRC exporters, the cash deposit rate will be the rate established in the final results of this administrative review; and (3) the cash deposit rate for non-PRC exporters will be the rate applicable to the PRC supplier of the exporter. These deposit requirements, when imposed, shall remain in effect until publication of the final results of the next administrative reviews.

Pursuant to 19 CFR 351.224(b), the Department will disclose to parties to the proceeding any calculations performed in connection with these preliminary results within five days after the publication of this notice. Pursuant to 19 CFR 351.309, interested parties may submit written comments in response to these preliminary results. Case briefs must be submitted within 30 days after the date of publication of this notice, and rebuttal briefs, limited to arguments raised in case briefs, must be submitted no later than five days after the time limit for filing case briefs. Parties who submit argument in this proceeding are requested to submit with the argument: (1) A statement of the issue, and (2) a brief summary of the argument. Case and rebuttal briefs must be served on interested parties in accordance with 19 CFR 351.303(f). Also, pursuant to 19 CFR 351.310, within 30 days of the date of publication of this notice, interested parties may request a public hearing on arguments raised in the case and rebuttal briefs. Unless the Secretary specifies otherwise, the hearing, if requested, will be held two days after the date for submission of rebuttal briefs, that is, thirty-seven days after the date of publication of these preliminary results. The Department will publish the final results of this administrative review, including the results of its analysis of issues raised in any case or rebuttal brief or at a hearing, not later than 120 days after the date of publication of these preliminary results, unless this time period is extended.

Assessment

The Department shall determine, and the U.S. Customs Service shall assess, antidumping duties on all appropriate entries. The Department will issue appraisement instructions directly to the U.S. Customs Service.

Notification to Parties

This notice also serves as a preliminary reminder to importers of their responsibility under 19 CFR 351.402(f) to file a certificate regarding the reimbursement of antidumping duties prior to liquidation of the relevant entries during this review period. Failure to comply with this requirement could result in the Secretary's presumption that reimbursement of antidumping duties occurred and the subsequent assessment of double antidumping duties.

This administrative review and notice are in accordance with sections 751(a)(1) and 777(i)(1) of the Act.

Dated: Dated: March 31, 2000.

Robert S. LaRussa,

Assistant Secretary for Import Administration.

[FR Doc. 00–8563 Filed 4–5–00; 8:45 am]

BILLING CODE 3510–DS–P

DEPARTMENT OF COMMERCE

International Trade Administration

[A–583–815]

Certain Welded Stainless Steel Pipe From Taiwan: Notice of Extension of Time Limit

AGENCY: Import Administration, International Trade Administration, U.S. Department of Commerce.

ACTION: Notice of extension of time limit.

SUMMARY: The Department of Commerce (''Department'') is extending the time limit for the final results of the antidumping duty administrative review of Certain Welded Stainless Steel Pipe from Taiwan, for the period December 1, 1997 through November 30, 1998.

EFFECTIVE DATE: April 6, 2000.

FOR FURTHER INFORMATION CONTACT: Juanita H. Chen or Robert Bolling, Enforcement Group III, Office 9, Import Administration, International Trade Administration, U.S. Department of Commerce, 1401 Constitution Avenue, NW, Room 7866, Washington, DC 20230, telephone (202) 482–0409, or (202) 482–3434, respectively.

SUPPLEMENTARY INFORMATION: On December 22, 1999, the Department published the preliminary results for this administrative review. *See Certain Welded Stainless Steel Pipe from Taiwan: Preliminary Results of Antidumping Administrative Review and Intent to Revoke in Part*, 64 FR 71728 (December 22, 1999). Section 751(a)(3)(A) of the Tariff Act of 1930, as amended (19 U.S.C. 1675(a)(3)(A)) (''Act''), requires the Department to complete an administrative review within 120 days of publication of the preliminary results. However, if it is not practicable to complete the review within the 120-day time limit, section 751(a)(3)(A) of the Act allows the Department to extend the time limit to 180 days from the date of publication of the preliminary results. The Department has determined that it is not practicable to issue its final results within the original 120-day time limit. See Decision Memorandum from Edward Yang to Joseph A. Spetrini, dated March 28, 2000. Therefore, in accordance with section 751(a)(3)(A) of the Act, we are extending the deadline for the final results in this review to 180 days from the date on which the notice of preliminary results was published. The fully extended deadline for the final results is June 19, 2000.

Dated: March 28, 2000.

Joseph A. Spetrini,

Deputy Assistant Secretary Enforcement Group III.

[FR Doc. 00–8567 Filed 4–5–00; 8:45 am]

BILLING CODE 3510–DS–P

DEPARTMENT OF COMMERCE

International Trade Administration

Application for Duty-Free Entry of Scientific Instrument

Pursuant to Section 6(c) of the Educational, Scientific and Cultural Materials Importation Act of 1966 (Pub. L. 89–651; 80 Stat. 897; 15 CFR part 301), we invite comments on the question of whether an instrument of equivalent scientific value, for the purposes for which the instrument shown below is intended to be used, is being manufactured in the United States.

Comments must comply with 15 CFR 301.5(a)(3) and (4) of the regulations and be filed within 20 days with the Statutory Import Programs Staff, U.S. Department of Commerce, Washington, D.C. 20230. Applications may be examined between 8:30 a.m. and 5:00 p.m. in Room 4211, U.S. Department of Commerce, 14th Street and Constitution Avenue, NW, Washington, DC.

Docket Number: 00–006. Applicant: LDS Hospital, (Intermountain Health Care), 8th Avenue & C Street, Salt Lake City, UT 84143. Instrument: Electron Microscope, Model JEM–1010. Manufacturer: JEOL Ltd., Japan. Intended Use: The instrument is intended to be used for ultrastructural diagnosis of patient material and for ultrastructural research using human and animal tissues. In addition, the instrument will be used for training medical and graduate students. Application accepted by Commissioner of Customs: March 13, 2000.

Frank W. Creel,

Director, Statutory Import Programs Staff.

[FR Doc. 00–8562 Filed 4–5–00; 8:45 am]

BILLING CODE 3510–DS–M

DEPARTMENT OF COMMERCE

International Trade Administration

[C–427–810]

Corrosion-Resistant Carbon Steel Flat Products from France; Final Results of Expedited Sunset Review of Countervailing Duty Order

AGENCY: Import Administration, International Trade Administration, Department of Commerce.

ACTION: Notice of Final Results of Expedited Sunset Review: Corrosion-Resistant Carbon Steel Flat Products from France.

SUMMARY: On September 1, 1999, the Department of Commerce (''the Department'') initiated a sunset review of the countervailing duty order on corrosion-resistant carbon steel flat products from France (64 FR 47767) pursuant to section 751(c) of the Tariff Act of 1930, as amended (''the Act''). On the basis of a notice of intent to participate and adequate substantive comments filed on behalf of the domestic interested parties, as well as inadequate response from respondent interested parties, the Department determined to conduct an expedited (120 day) sunset review. Based on our analysis of the comments received, we find that revocation of the countervailing duty order would be likely to lead to continuation or recurrence of a countervailable subsidy at the levels listed below in the section entitled Final Results of the Review.

EFFECTIVE DATE: April 6, 2000.

FOR FURTHER INFORMATION CONTACT: Eun W. Cho or Melissa G. Skinner, Office of Policy for Import Administration, International Trade Administration, U.S. Department of Commerce, 14th Street and Constitution Avenue, NW, Washington, DC 20230; telephone: (202) 482–1698 or (202) 482–1560, respectively.

SUPPLEMENTARY INFORMATION:

The Applicable Statute

Unless otherwise indicated, all citations to the Act are references to the provisions effective January 1, 1995, the effective date of the amendments made to the Act by the Uruguay Round Agreements Act (''URAA''). In addition, unless otherwise indicated, all citations to the Department regulations are to 19 CFR part 351 (1999). Guidance on methodological or analytical issues relevant to the Department's conduct of sunset reviews is set forth in the Department Policy Bulletin 98:3—Policies Regarding the Conduct of Five-year (''Sunset'') Reviews of Antidumping and Countervailing Duty Orders; Policy Bulletin, 63 FR 18871 (April 16, 1998) (Sunset Policy Bulletin).

Background

On September 1, 1999, the Department initiated a sunset review of the countervailing duty order on corrosion-resistant carbon steel flat products from France (64 FR 47767). We invited parties to comment. On the basis of a notice of intent to participate and adequate substantive response filed on behalf of the domestic interested parties, as well as inadequate response from respondent interested parties, the Department determined to conduct an expedited (120 day) sunset review. The Department is conducting this sunset review in accordance with sections 751 and 752 of the Act.

In accordance with section 751(c)(5)(C)(v) of the Act, the Department may treat a review as extraordinarily complicated if it is a review of a transition order (i.e., an order in effect on January 1, 1995). This review concerns a transition order within the meaning of section 751(c)(6)(C)(i) of the Act. Therefore, on December 22, 1999, the Department determined that the sunset review of the countervailing duty order on corrosion-resistant steel from France is extraordinarily complicated and extended the time limit for completion of the final results of this review until not later than March 29, 2000, in accordance with section 751(c)(5)(B) of the Act.[1]

Scope of Review

The products covered by this order are certain corrosion-resistant carbon steel flat products from France. These products include flat-rolled carbon steel products, of rectangular shape, either clad, plated, or coated with corrosion-resistant metals such as zinc, aluminum, or zinc-, aluminum-, nickel-or iron-based alloys, whether or not corrugated or painted, varnished or coated with plastics or other nonmetallic substances in addition to the metallic coating, in coils (whether or not in successively superimposed layers) and of a width of 0.5 inch or greater, or in straight lengths which, if of a thickness less than 4.75 millimeters, are of a width of 0.5 inch or greater and which measures at least 10 times the thickness or if of a thickness of 4.75 millimeters or more are of a width which exceeds 150 millimeters and measures at least twice the thickness, as currently classifiable in the Harmonized Tariff Schedule of the United States (''HTSUS'') under item numbers 7210.31.0000, 7210.39.0000, 7210.41.0000, 7210.49.0030, 7210.49.0090, 7210.60.0000, 7210.70.6030, 7210.70.6060, 7210.70.6090,7210.90.1000, 7210.90.6000, 7210.90.9000, 7212.21.0000, 7212.29.0000, 7212.30.1030, 7212.30.1090, 7212.30.3000, 7212.30.5000, 7212.40.1000, 7212.40.5000, 7212.50.0000, 7212.60.0000, 7215.90.1000, 7215.90.5000, 7217.12.1000, 7217.13.1000, 7217.19.1000, 7217.19.5000, 7217.22.5000, 7217.23.5000, 7217.29.1000, 7217.29.5000, 7217.32.5000,7217.33.5000, 7217.39.1000, and 7217.39.5000.

Included in this scope are flat-rolled products of non-rectangular cross-section where such cross-section is achieved subsequent to the rolling process (*i.e.*, products which have been worked after rolling)—for example, products which have been bevelled or rounded at the edges. Excluded from this scope are flat-rolled steel products either plated or coated with tin, lead, chromium, chromium oxides, both tin and lead (''terne plate''), or both chromium and chromium oxides (''tin-free steel''), whether or not painted, varnished or coated with plastics or

[1] See Extension of Time Limit for Final Results of Expedited Five-Year Reviews, 64 FR 71726 (December 22, 1999).

other nonmetallic substances in addition to the metallic coating. Also excluded from the scope are clad products in straight lengths of 0.1875 inch or more in composite thickness and of a width which exceeds 150 millimeters and measures at least twice the thickness. Also excluded from the scope are certain clad stainless flat-rolled products, which are three-layered corrosion-resistant carbon steel flat-rolled products less than 4.75 millimeters in composite thickness that consist of a carbon steel flat-rolled product clad on both sides with stainless steel in a 20%–60%–20% ratio.

The HTSUS item numbers are provided for convenience and customs purposes. The written description remains dispositive.

Analysis of Comments Received

All issues raised in substantive responses by parties to this sunset review are addressed in the Issues and Decision Memorandum (''Decision Memo'') from Jeffrey A. May, Director, Office of Policy, Import Administration, to Robert S. LaRussa, Assistant Secretary for Import Administration, dated March 29, 2000, which is hereby adopted by this notice. The issues discussed in the attached Decision Memo include the likelihood of continuation or recurrence of subsidy, the net countervailable subsidy likely to prevail were the order revoked, and the nature of the subsidy. Parties can find a complete discussion of all issues raised in this review and the corresponding recommendations in this public memorandum which is on file in B–099, the Central Records Unit, of the main Commerce building.

In addition, a complete version of the Decision Memo can be accessed directly on the Web at www.ita.doc.gov/import admin/records/frn. The paper copy and electronic version of the Decision Memo are identical in content.

Final Results of Review

We determine that revocation of the countervailing duty order would be likely to lead to continuation or recurrence of the subsidy at the following net countervailable subsidy.[2]

Manufacturer/exporters	Margin (percent)
Usinor	15.13
Country-wide	15.13

Although the programs included in our calculation of the net countervailable subsidy likely to prevail if the order were revoked do not fall within Article 3 of the Subsidies Agreement, some or all of them may be subsidies as described in Article 6.1. For example, the net countervailable subsidy may exceed five percent, as measured in accordance with Annex IV of the Subsidies Agreement. The Department, however, has no information with which to make such a calculation; nor do we believe it appropriate to attempt such a calculation in the course of a sunset review. Moreover, we note that as of January 1, 2000, Article 6.1 has ceased to apply (see Article 31 of the Subsidies Agreement). As such, we are only providing the Commission the following program descriptions:

(1) PACS/FIS: This program of equity infusions was devised to restructure Usinor and its massive debt.

(2) Grants in the Form of Shareholders' Advances: The Government of France (''GOF'') financed the recurring needs of Usinor through shareholders' advances beginning in 1982. These shareholders' advance carried no interest and there was no precondition for receipt of these funds.

(3) Investment Subsidies: Under this program the French companies would receive subsides from the GOF for the purchase of fixed assets. Because the relevant parties did not provide sufficient information, based on best information available, the Department determined that the Investment Subsidies are specific rather than generally available.

(4) Grants in the Form of Cancellation of Debt: The two former private majority shareholders of Usinor canceled a portion of debt owed to them by Usinor. The Department found that the debt forgiveness was provided at the direction of the GOF and, hence, countervailable.

(5) ECSC 54: Under this program, investment loans are provided by the European Union for the purpose of purchasing new equipment or financing modernization. Because these loans are only available to companies in steel and coal industries, the Department found the loans countervailable.

(6) CFDI: Under this program participative loans, which were by law available to all French companies, were issued by the CFDI. The borrower paid a lower-than-market interest rate plus a share of future profits according to an agreed upon formula. Because the GOF could not provide sufficient information, the Department determined that loans under this program are de facto limited to specific enterprise or industry and that, therefore, these loans are countervailable to the extent that they were provided on terms inconsistent with commercial considerations.

(7) ECSC 56: The main purpose of these grants are to assist workers affected by the restructuring of the coal and steel industries. Because the Department did not have information pertaining to some specific details, it assumed that the extra government contribution relieved Usinor of an obligation and, therefore, is countervailable in its entirety.

(8) Other Loan Guarantees: These guarantees were provided by, or were provided to guarantee loans from, Credit National, bank syndicates in which Credit National, participated, Caisse des Depots et Consignations, Groupement de l'Industrie Siderurgique, FDES, the ECSC, and the European Investment Bank. Because relevant parties did not provide sufficient information, the Department found, based on best information available, inter alia, the fees associated with these loan guarantees are specific rather than generally available, and therefore, countervailable.

(9) Other Participative Loans: Because the Department had no information regarding the category of these loans and about the programs and because these loans were not reported, based on best information available and the calculation of the benefit from these loans, the Department determined that these loans are countervailable.

This notice also serves as the only reminder to parties subject to administrative protective orders (''APO'') of their responsibility concerning the return or destruction of proprietary information disclosed under APO in accordance with 19 CFR 351.305 of the Department's regulations. Timely notification of the return or destruction of APO materials or conversion to judicial protective order is hereby requested. Failure to comply with the regulations and terms of an APO is a violation which is subject to sanction.

We are issuing and publishing this determination and notice in accordance with sections section 751(c), 752, and 777(i) of the Act.

[2] In Inland Steel Industries, Inc. v. U.S., 188 F3d. 1349 (Fed. Cir. 1999), the court affirmed several lower court decisions which had changed the net countervailing subsidy rate to 15.13 percent from the 15.12 percent calculated in the original investigation.

Dated: March 29, 2000.

Joseph A. Spetrini,

Acting Assistant Secretary for Import Administration.

[FR Doc. 00–8555 Filed 4–5–00; 8:45 am]

BILLING CODE 3510–DS–P

DEPARTMENT OF COMMERCE

International Trade Administration

[C–351–818]

Certain Cut-to-Length Carbon Steel Plate From Brazil; Final Results of Countervailing Duty Expedited Sunset Review

AGENCY: Import Administration, International Trade Administration, Department of Commerce.

ACTION: Notice of final results of countervailing duty expedited sunset review: Certain cut-to-length carbon steel plate from Brazil.

SUMMARY: On September 1, 1999, the Department of Commerce (''the Department'') published the notice of initiation of the sunset review of the countervailing duty order on certain cut-to-length carbon steel plate (''cut-to-length plate'') from Brazil. On the basis of a notice of intent to participate and adequate substantive comments filed on behalf of domestic interested parties and inadequate response (in this case, no response) from respondent interested parties, we determined to conduct an expedited review. As a result of this review, the Department finds that revocation of the countervailing duty order would be likely to lead to continuation or recurrence of a countervailable subsidy. The net countervailable subsidy is identified in the Final Results of Review section of this notice.

EFFECTIVE DATE: April 6, 2000.

FOR FURTHER INFORMATION CONTACT: Mark D. Young, Import Administration, International Trade Administration, U.S. Department of Commerce, Washington, DC 20230; telephone: (202) 482–6397.

SUPPLEMENTARY INFORMATION:

Statute and Regulations

Unless otherwise indicated, all citations to the Tariff Act of 1930, as amended (''the Act''), are references to the provisions effective January 1, 1995, the effective date of the amendments made to the Act by Uruguay Round Agreements Act (''URAA''). In addition, unless otherwise indicated, all citations to the Department of Commerce's (''the Department's'') regulations are to 19 CFR part 351 (1999). Guidance on methodological or analytical issues relevant to the Department's conduct of sunset reviews is set forth in the Department's Policy Bulletin 98:3—Policies Regarding the Conduct of Five-year (''Sunset'') Reviews of Antidumping and Countervailing Duty Orders; Policy Bulletin, 63 FR 18871 (April 16, 1998) (''Sunset Policy Bulletin'').

Background

On September 1, 1999, the Department published the notice of initiation of the sunset review of the countervailing duty order on cut-to-length plate from Brazil (64 FR 47767). The Department received a Notice of Intent to Participate on behalf of Bethlehem Steel Corporation and U.S. Steel Group, a unit of USX Corporation (''the domestic interested parties''), within the deadline specified in section 351.218(d)(1)(i) of the Sunset Regulations. The domestic interested parties claimed interested party status under section 771(9)(C) of the Act, as U.S. manufacturers of cut-to-length plate. We received a complete substantive response from the domestic interested parties on October 1, 1999, within the 30-day deadline specified in the Sunset Regulations under section 351.218(d)(3)(i). In their substantive response, the domestic interested parties stated that they were the petitioner in the original investigation of cut-to-length plate from Brazil. We did not receive a substantive response from any respondent interested party to these proceedings. As a result, pursuant to 751(c)(3)(B) of the Act and 19 CFR 351.218(e)(1)(ii)(C) of the Department's regulations, the Department determined to conduct an expedited, 120-day, review of this order.

In accordance with section 751(c)(5)(C)(v) of the Act, the Department may treat a review as extraordinarily complicated if it is a review of a transition order (*i.e.,* an order in effect on January 1, 1995). The review at issue concern a transition order within the meaning of section 751(c)(6)(C)(i) of the Act. Therefore, the Department determined that the sunset review of the countervailing duty order on cut-to-length plate from Brazil is extraordinarily complicated and extended the time limit for completion of the final results of this review until not later than March 29, 2000, in accordance with section 751(c)(5)(B) of the Act.[1]

Scope of Reviews

The products covered by this countervailing duty order constitute one ''class or kind'' of merchandise: certain cut-to-length plate. These products include hot-rolled carbon steel universal mill plates (*i.e.,* flat-rolled products rolled on four faces or in a closed box pass, of a width exceeding 150 millimeters but not exceeding 1,250 millimeters and of a thickness of not less than 4 millimeters, not in coils and without patterns in relief), of rectangular shape, neither clad, plated, nor coated with metal, whether or not painted, varnished, or coated with plastics or other nonmetallic substances; and certain hot-rolled carbon steel flat-rolled products in straight lengths, of rectangular shape, hot rolled, neither clad, plated, nor coated with metal, whether or not painted, varnished, or coated with plastics or other nonmetallic substances, 4.75 millimeters or more in thickness and of a width which exceeds 150 millimeters and measures at least twice the thickness, as currently classifiable in the Harmonized Tariff Schedule of the United States (''HTSUS'') under item numbers 7208.31.0000, 7208.32.0000, 7208.33.1000, 7208.33.5000, 7208.41.0000, 7208.42.0000, 7208.43.0000, 7208.90.0000, 7210.70.3000, 7210.90.9000, 7211.11.0000, 7211.12.0000, 7211.21.0000, 7211.22.0045, 7211.90.0000, 7212.40.1000, 7212.40.5000, and 7212.50.0000. Included within the scope are flat-rolled products of non-rectangular cross-section where such cross-section is achieved subsequent to the rolling process (*i.e.,* products which have been ''worked after rolling''); for example, products which have been beveled or rounded at the edges. Excluded is grade X–70 plate. These HTSUS item numbers are provided for convenience and customs purposes. The Department's written description remains dispositive.

The Department has made one scope ruling on the subject merchandise from Brazil. The following product was determined to be within the scope of the order:

[1] *See Extension of Time Limit for Final Results of Five-Year Reviews,* 64 FR 71726 (December 22, 1999).

Product within scope	Manufacturer	Citation
Profile Slabs	Companhia Siderurgica Tubarao	62 FR 30569, June 4, 1997.

This review covers all imports from all manufacturers and exporters of cut-to-length plate from Brazil.

Analysis of Comments Received

All issues raised in this case by parties to this sunset review are addressed in the ''Issues and Decision Memorandum'' (''Decision Memo'') from Jeffrey A. May, Director, Office of Policy, Import Administration, to Robert S. LaRussa, Assistant Secretary for Import Administration, dated March 29, 2000, which is hereby adopted by this notice. The issues discussed in the Decision Memo include the likelihood of continuation or recurrence of a countervailable subsidy, the net countervailable subsidy, and the nature of the subsidy. Parties can find a complete discussion of all issues raised in this review and the corresponding recommendations in this public memorandum, which is on file in room B–099 of the main Commerce Building.

In addition, a complete version of the Decision Memo can be accessed directly on the Web at www.ita.doc.gov/import admin/records/frn/. The paper copy and electronic version of the Decision Memo are identical in content.

Final Results of Reviews

We determine that revocation of the countervailing duty order on cut-to-length plate from Brazil would be likely to lead to continuation or recurrence of a countervailable subsidy at the rates listed below:

Brazilian manufacturers/exporters	Cash deposit rate (percent)
Usinas Siderurgicas de Minas Gerais S.A. (''USIMINAS'')	5.44
Companhia Siderurgica Paulista (''COSIPA'')	48.64
All others	23.10

Because receipt of benefits provided by the Government of Brazil's (''GOB's'') countervailable program Exemption of IPI and Duties on Imports under Decree-Law 2324 is contingent upon exports, this program fall within the definition of an export subsidy under Article 3.1(a) of the Subsides Agreement.

All of the other programs provided by the GOB are, however, programs that could be found inconsistent with Article 6.1 of the Subsidies Agreement [2] if the net subsidy exceeds 5 percent *ad valorem* as measured in accordance with Annex IV of the Subsidies Agreement. However, the Department does not have enough information to calculate or determine whether the total *ad valorem* subsidization of the subject merchandise from these programs exceeds five-percent or whether they were meant to cover operating losses or to be used as direct forgiveness of debt. Nor does the Department believe such calculation or determination would be appropriate in the course of a sunset review. Instead, we are providing the Commission with the program descriptions listed below.

Equity Infusions

This program enabled USIMINAS and COSIPA to receive equity infusions from the GOB in the following years: USIMINAS, 1980 to 1988; and COSIPA, 1977 through 1991. We determined that equity infusions by the GOB into USIMINAS, in these years, and COSIPA in years 1997 through 1989 and 1991 were made on terms inconsistent with commercial considerations.

Fiscal Benefits by Virtue of the CDI

The CDI provides for the reduction of up to 100 percent of the import duties and up to 10 percent of the IPI tax (value-added tax) on certain imported machinery for specific projects.

IPI Rebate Program Under Law 7554/86

This Program consists of a rebate of 95 percent of the IPI tax paid on domestic sales of industrial products.

BNDES Financing

In this program, loans were provided on terms inconsistent with commercial considerations because the companies that received the loans were uncreditworthy.

Provision of Infrastructure

This program provides preferential interest on purchasing agreements with a government-owned steel holding company.

This notice also serves as the only reminder to parties subject to administrative protective orders (''APO'') of their responsibility concerning the return or destruction of proprietary information disclosed under APO in accordance with 19 CFR 351.305 of the Department's regulations. Timely notification of the return or destruction of APO materials or conversion to judicial protective order is hereby requested. Failure to comply with the regulations and terms of an APO is a violation which is subject to sanction.

We are issuing and publishing these results and notice in accordance with sections section 751(c), 752, and 777(i)(1) of the Act.

Dated: March 29, 2000.

Joseph A. Spetrini,

Acting Assistant Secretary for Import Administration.

[FR Doc. 00–8544 Filed 4–5–00; 8:45 am]

BILLING CODE 3510–DS–P

[2] We note that as of January 1, 2000, Article 6.1 has ceased to apply (*see* Article 31 of the Subsidies Agreement).

DEPARTMENT OF COMMERCE

International Trade Administration

[C–423–806]

Certain Cut-to-Length Carbon Steel Plate from Belgium; Final Results of Expedited Sunset Review

AGENCY: Import Administration, International Trade Administration, Department of Commerce.

ACTION: Notice of Final Results of Expedited Sunset Review: Certain Cut-to-Length Carbon Steel Plate from Belgium.

SUMMARY: On September 1, 1999, the Department of Commerce (''the Department'') initiated a sunset review of the countervailing duty order on certain cut-to-length carbon steel plate (''CTL plate'') from Belgium (64 FR 47767) pursuant to section 751(c) of the Tariff Act of 1930, as amended (''the Act''). On the basis of a notice of intent to participate and adequate response filed on behalf of domestic interested parties and inadequate response from respondent interested parties, the Department determined to conduct an expedited review. As a result of this review, the Department finds that revocation of the countervailing duty order would likely lead to continuation or recurrence of a countervailable subsidy at the level indicated in the Final Results of Review section of this notice.

EFFECTIVE DATE: April 6, 2000.

FOR FURTHER INFORMATION CONTACT: Darla D. Brown, Office of Policy for Import Administration, International Trade Administration, U.S. Department of Commerce, 14th Street and Constitution Avenue, NW, Washington, DC 20230; telephone: (202) 482–3207.

SUPPLEMENTARY INFORMATION:

Applicable Statute and Regulations

Unless otherwise indicated, all citations to the Tariff Act of 1930, as amended (''the Act''), are references to the provisions effective January 1, 1995, the effective date of the amendments made to the Act by the Uruguay Round Agreements Act (''URAA''). In addition, unless otherwise indicated, all citations to the Department's regulations are to 19 CFR part 351 (1999) in general. Guidance on methodological or analytical issues relevant to the Department's conduct of sunset reviews is set forth in the Department's Policy Bulletin 98:3—*Policies Regarding the Conduct of Five-year (''Sunset'') Reviews of Antidumping and Countervailing Duty Orders; Policy Bulletin*, 63 FR 18871 (April 16, 1998) (''*Sunset Policy Bulletin*'').

Background

On September 1, 1999, the Department initiated a sunset review of the countervailing duty order on CTL plate from Belgium (64 FR 47767), pursuant to section 751(c) of the Act. On the basis of a notice of intent to participate and adequate substantive response filed on behalf of domestic interested parties and inadequate response from respondent interested parties, we determined to conduct an expedited review. The Department has conducted this sunset review in accordance with sections 751(c) and 752 of the Act.

Scope

The products covered by this order are certain cut-to-length carbon steel plate. These products include hot-rolled carbon steel universal mill plates (*i.e.*, flat-rolled products rolled on four faces or in a closed box pass, of a width exceeding 150 millimeters but not exceeding 1,250 millimeters and of a thickness of not less than 4 millimeters, not in coils and without patterns in relief), of rectangular shape, neither clad, plated nor coated with metal, whether or not painted, varnished, or coated with plastics or other nonmetallic substances; and certain hot-rolled carbon steel flat-rolled products in straight lengths, of rectangular shape, hot rolled, neither clad, plated, nor coated with metal, whether or not painted, varnished, or coated with plastics or other nonmetallic substances, 4.75 millimeters or more in thickness and of a width which exceeds 150 millimeters and measures at least twice the thickness, as currently classifiable in the Harmonized Tariff Schedule (''HTS'') under subheadings 7208.31.0000, 7208.32.0000, 7208.33.1000, 7208.33.5000, 7208.41.0000, 7208.42.0000, 7208.43.0000, 7208.90.0000, 7210.70.3000, 7210.90.9000, 7211.11.0000, 7211.12.0000, 7211.21.0000, 7211.22.0045, 7211.90.0000, 7212.40.1000, 7212.40.5000, and 7212.50.0000. Included in this review are flat-rolled products of non-rectangular cross-section where such cross-section is achieved subsequent to the rolling process (*i.e.*, products which have been ''worked after rolling'')—for example, products which have been beveled or rounded at the edges. Excluded from this order is grade X–70 plate. The HTS subheadings are provided for convenience and customs purposes only. The written description of the scope remains dispositive.

Analysis of Substantive Response

All issues raised in the substantive responses and rebuttals by parties to this sunset review are addressed in the ''Issues and Decision Memorandum'' (''Decision Memo'') from Jeffrey A. May, Director, Office of Policy, Import Administration, to Robert S. LaRussa, Assistant Secretary for Import Administration, dated March 29, 2000, which is hereby adopted by this notice. The issues discussed in the attached Decision Memo include the likelihood of continuation or recurrence of a countervailable subsidy and the net subsidy rate likely to prevail were the order revoked. Parties can find a complete discussion of all issues raised in this review and the corresponding recommendations in this public memorandum which is on file in room B–099 of the main Commerce building.

In addition, a complete version of the Decision Memo can be accessed directly on the Web at *www.ita.doc.gov/import admin/records/frn/*. The paper copy and electronic version of the Decision Memo are identical in content.

Final Results of Review

We determine that revocation of the countervailing duty order on CTL plate from Belgium would be likely to lead to continuation or recurrence of a countervailable subsidy. The net countervailable subsidy is 23.15 percent *ad valorem* for Cockerill, 1.05 percent *ad valorem* for Fafer, and 5.92 percent *ad valorem* for ''all others.''

Although the programs included in our calculation of the net countervailable subsidy likely to prevail if the orders were revoked do not fall within the definition of an export subsidy under Article 3.1(a) of the Subsidies Agreement, they may be subsidies described in Article 6, if the net countervailable subsidy exceeds 5 percent, as measured in accordance with Annex IV of the Subsidies Agreement. The Department, however, has no information with which to make such a calculation, nor do we believe it appropriate to attempt such a calculation in the course of a sunset review.[1] Rather, we are providing the Commission the program descriptions contained in the Decision Memo.

This notice serves as the only reminder to parties subject to administrative protective order (''APO'') of their responsibility concerning the disposition of proprietary information disclosed under APO in accordance with 19 CFR 351.305 of the Department's regulations. Timely notification of return/destruction of APO materials or conversion to judicial protective order is hereby requested. Failure to comply with the regulations and the terms of an APO is a sanctionable violation.

This five-year (''sunset'') review and notice are in accordance with sections 751(c), 752, and 777(i)(1) of the Act.

Dated: March 29, 2000.

Joseph A. Spetrini,

Acting Assistant Secretary for Import Administration.

[FR Doc. 00–8549 Filed 4–5–00; 8:45 am]

BILLING CODE 3510–DS–P

DEPARTMENT OF COMMERCE

International Trade Administration

[C–201–810]

Certain Cut-to-Length Carbon Steel Plate From Mexico; Final Results of Countervailing Duty Expedited Sunset Review

AGENCY: Import Administration, International Trade Administration, Department of Commerce.

ACTION: Notice of final results of countervailing duty expedited sunset review: certain cut-to-length carbon steel plate from Mexico.

SUMMARY: On September 1, 1999, the Department of Commerce (''the Department'') published the notice of

[1] Moreover, we note that as of January 1, 2000, Article 6.1 has ceased to apply (*see* Article 31 of the Subsidies Agreement).

initiation of the sunset review of the countervailing duty order on certain cut-to-length carbon steel plate (''cut-to-length plate'') from Mexico. On the basis of a notice of intent to participate and adequate substantive comments filed on behalf of domestic interested parties and inadequate response (in this case, no response) from respondent interested parties, we determined to conduct an expedited review. As a result of this review, the Department finds that revocation of the countervailing duty order would be likely to lead to continuation or recurrence of a countervailable subsidy. The net countervailable subsidy is identified in the Final Results of Review section of this notice.

EFFECTIVE DATE: April 6, 2000.

FOR FURTHER INFORMATION CONTACT: Mark D. Young, Import Administration, International Trade Administration, U.S. Department of Commerce, Washington, DC 20230; telephone: (202) 482–6397.

SUPPLEMENTARY INFORMATION:

Statute and Regulations

Unless otherwise indicated, all citations to the Tariff Act of 1930, as amended (''the Act''), are references to the provisions effective January 1, 1995, the effective date of the amendments made to the Act by the Uruguay Round Agreements Act (''URAA''). In addition, unless otherwise indicated, all citations to the Department of Commerce's (''the Department's'') regulations are to 19 CFR part 351 (1999). Guidance on methodological or analytical issues relevant to the Department's conduct of sunset reviews is set forth in the Department's Policy Bulletin 98:3—Policies Regarding the Conduct of Five-year (''Sunset'') Reviews of Antidumping and Countervailing Duty Orders; Policy Bulletin, 63 FR 18871 (April 16, 1998) (''Sunset Policy Bulletin'').

Background

On September 1, 1999, the Department published the notice of initiation of the sunset review of the countervailing duty order on cut-to-length plate from Mexico (64 FR 47767). The Department received a Notice of Intent to Participate on behalf of Bethlehem Steel Corporation and U.S. Steel Group, a unit of USX Corporation (''the domestic interested parties''), within the deadline specified in section 351.218(d)(1)(i) of the Sunset Regulations. The domestic interested parties claimed interested party status under section 771(9)(C) of the Act, as U.S. manufacturers of cut-to-length plate. We received a complete substantive response from the domestic interested parties on October 1, 1999, within the 30-day deadline specified in the Sunset Regulations under section 351.218(d)(3)(i). In their substantive response, the domestic interested parties stated that they were the petitioners in the original investigation of cut-to-length plate from Mexico. Furthermore, the domestic interested parties stated that they had participated in each subsequent segment of the case. We did not receive a substantive response from any respondent interested party to these proceedings. As a result, pursuant to section 751(c)(3)(B) of the Act and 19 CFR 351.218(e)(1)(ii)(C), the Department determined to conduct an expedited, 120-day, review of this order.

In accordance with section 751(c)(5)(C)(v) of the Act, the Department may treat a review as extraordinarily complicated if it is a review of a transition order (*i.e.,* an order in effect on January 1, 1995). The review at issue concerns a transition order within the meaning of section 751(c)(6)(C)(i) of the Act. Therefore, the Department determined that the sunset review of the countervailing duty order on cut-to-length plate from Mexico is extraordinarily complicated and extended the time limit for completion of the final results of this review until not later than March 29, 2000, in accordance with section 751(c)(5)(B) of the Act.[1]

Scope of Reviews

The products covered by this countervailing duty order constitute one ''class or kind'' of merchandise: certain cut-to-length carbon steel plate. These products include hot-rolled carbon steel universal mill plates (*i.e.,* flat-rolled products rolled on four faces or in a closed box pass, of a width exceeding 150 millimeters but not exceeding 1,250 millimeters and of a thickness of not less than 4 millimeters, not in coils and without patterns in relief), of rectangular shape, neither clad, plated, nor coated with metal, whether or not painted, varnished, or coated with plastics or other nonmetallic substances; and certain hot-rolled carbon steel flat-rolled products in straight lengths, of rectangular shape, hot rolled, neither clad, plated, nor coated with metal, whether or not painted, varnished, or coated with plastics or other nonmetallic substances, 4.75 millimeters or more in thickness and of a width which exceeds 150 millimeters and measures at least twice the thickness, as currently classifiable in the Harmonized Tariff Schedule of the United States (''HTSUS'') under item numbers 7208.31.0000, 7208.32.0000, 7208.33.1000, 7208.33.5000, 7208.41.0000, 7208.42.0000, 7208.43.0000, 7208.90.0000, 7210.70.3000, 7210.90.9000, 7211.11.0000, 7211.12.0000, 7211.21.0000, 7211.22.0045, 7211.90.0000, 7212.40.1000, 7212.40.5000, and 7212.50.0000. Included within the scope are flat-rolled products of non-rectangular cross-section where such cross-section is achieved subsequent to the rolling process (*i.e.,* products which have been ''worked after rolling''); for example, products which have been beveled or rounded at the edges. Excluded is grade X–70 plate. These HTSUS item numbers are provided for convenience and customs purposes. The Department's written description remains dispositive. There has not been a scope review of the subject merchandise from Mexico.[2]

This review covers all imports from all manufacturers and exporters of cut-to-length plate from Mexico.

Analysis of Comments Received

All issues raised in this case by parties to this sunset review are addressed in the ''Issues and Decision Memorandum'' (''Decision Memo'') from Jeffrey A. May, Director, Office of Policy, Import Administration, to Robert S. LaRussa, Assistant Secretary for Import Administration, dated March 29, 2000, which is hereby adopted by this notice. The issues discussed in the Decision Memo include the likelihood of continuation or recurrence of a countervailable subsidy, the net countervailable subsidy, and the nature of the subsidy. Parties can find a complete discussion of all issues raised in this review and the corresponding recommendations in this public memorandum, which is on file in room B–099 of the main Commerce Building.

In addition, a complete version of the Decision Memo can be accessed directly on the Web at www.ita.doc.gov/import admin/records/frn/. The paper copy and electronic version of the Decision Memo are identical in content.

Final Results of Reviews

We determine that revocation of the countervailing duty order on cut-to-

[1] See Extension of Time Limit for Final Results of Five-Year Reviews, 64 FR 71726 (December 22, 1999).

[2] However, The Department has made one scope ruling on the subject merchandise from Brazil. The following product was determined to be within the scope of the order: Profile Slabs manufactured by Companhia Siderurgica Tubarao, 62 FR 30569 (June 4, 1997).

length plate from Mexico would be likely to lead to continuation or recurrence of a countervailable subsidy at the rates listed below:

Mexican manufacturers/exporters	Net subsidy rate (percent)
Altos Hornos de Mexico S.A	25.87
All Others	20.25

Among the benefits provided by the GOM's countervailable programs the Department determined that those provided by the Bancomext Export Loans and PITEX Duty-Free Imports for Companies That Export were contingent upon export performance;[3] therefore, both programs fall within the purview of Article 3.1(a). Because receipt of a benefit under the 1986 Assumption of AHMSA's Debt program, the 1988 and 1990 Debt Restructuring of AHMSA Debt and the Resulting Discounted Prepayment in 1996 of AHMSA's Restructuring Debt Owed to the GOM program, and the Pre-privatization Lay-off Financing from the GOM and the 1991 Equity Infusion in Connection with the Debt to Equity Swap of PROCARSA program are types of debt forgiveness, these programs fall within the definition ''direct forgiveness of debt'' for purposes of Article 6.1(d) of the Subsidies Agreement. The GOM Equity Infusions program, the Immediate Deduction program, and IMIS Research and Development Grants program are not contingent on exports, nor are they ''direct forgiveness of debt.'' Therefore, these programs could be found inconsistent with Article 6.1[4] of the Subsidies Agreement if the net subsidy exceeds 5 percent *ad valorem* as measured in accordance with Annex IV of the Subsidies Agreement. However, the Department does not have enough information to calculate or determine whether the total *ad valorem* subsidization of the subject merchandise from these programs exceeds five-percent or whether they were meant to cover operating losses or to be used as direct forgiveness of debt. Nor does the Department believe such a calculation or determination would be appropriate in the course of a sunset review. Instead, we are providing the Commission with the program descriptions listed below.

[3] See Certain Cut-To-Length Carbon Steel Plate from Mexico: Final Results of Countervailing Duty Administrative Review, 65 FR 13368 (March 13, 2000).

[4] We note that as of January 1, 2000, Article 6.1 has ceased to apply (see Article 31 of the Subsidies Agreement).

Equity Infusions

This program enabled AHMSA to receive equity infusions from the GOM in 1977, each year from 1979 to 1987, in 1990, and in 1991. We determined that equity infusions by the GOM into AHMSA in these years were specific and made on terms inconsistent with commercial considerations.

IMIS Research and Development Grants

Under this program IMIS performed joint venture research and did not make the results of the joint venture publicly available, therefore the Department was not able to determine the exact value of IMIS's contributions to the joint venture.

Immediate Deduction

This program promotes investment by allowing the future deduction of fixed assets, at their present value, at the time of the investment. This program only applied to property used permanently within Mexico but outside of the metropolitan areas of Mexico City, Guadalajara, and Monterey. With respect to small firms (*i.e.,* firms with a gross income of 7 million pesos or less), the location restriction does not apply.

This notice also serves as the only reminder to parties subject to administrative protective orders (''APO'') of their responsibility concerning the return or destruction of proprietary information disclosed under APO in accordance with 19 CFR 351.305 of the Department's regulations. Timely notification of the return or destruction of APO materials or conversion to judicial protective order is hereby requested. Failure to comply with the regulations and terms of an APO is a violation which is subject to sanction.

We are issuing and publishing these results and notice in accordance with sections 751(c), 752, and 777(i)(1) of the Act.

Dated: March 29, 2000.

Joseph A. Spetrini,

Acting Assistant Secretary for Import Administration.

[FR Doc. 00–8556 Filed 4–5–00; 8:45 am]

BILLING CODE 3510–DS–P

DEPARTMENT OF COMMERCE

International Trade Administration

[C–475–819]

Certain Pasta From Italy: Notice of Extension of Time Limit for the 1998 Countervailing Duty Administrative Review

AGENCY: Import Administration, International Trade Administration, Department of Commerce.

SUMMARY: The Department of Commerce is extending the time limit for the preliminary results of the third review of the countervailing duty order on certain pasta from Italy. The period of review is January 1 through December 31, 1998.

EFFECTIVE DATE: April 6, 2000.

FOR FURTHER INFORMATION CONTACT: Craig Matney or Annika O'Hara, Office of AD/CVD Enforcement I, Import Administration, U.S. Department of Commerce, 14th Street and Constitution Avenue, NW, Washington, DC 20230; telephone (202) 482–1778 or (202) 482-3798, respectively.

SUPPLEMENTARY INFORMATION:

Applicable Statute

Unless otherwise indicated, all citations to the statute are references to the provisions effective January 1, 1995, the effective date of the amendments made to the Tariff Act of 1930 (the Act) by the Uruguay Round Agreements Act. Unless otherwise indicated, all citations to the Department's regulations are to 19 CFR part 351 (1999).

Background

On August 30, 1999, the Department of Commerce (''the Department'') initiated the third countervailing duty administrative review of certain pasta from Italy, covering calendar year 1998. See *Initiation of Antidumping and Countervailing Duty Administrative Reviews and Requests for Revocation in Part,* 64 FR 47167 (August 30, 1999). Corrections to the initiation notice were published in the **Federal Register** on September 8, 1999 (64 FR 48897) and November 4, 1999 (64 FR 60161). The preliminary results are currently due no later than April 3, 2000.

Statutory Time Limits

Section 751(a)(3)(A) of the Tariff Act of 1930, as amended (the Act), requires the Department to issue the preliminary results within 245 days after the last day of the anniversary month of the order for which a review is requested. However, if it is not practicable to issue the preliminary results within the time

period, section 751(a)(3)(A) of the Act allows the Department to extend this deadline to a maximum of 365 days.

Postponement

The Department has determined that additional time is necessary to issue the preliminary results in this administrative review for the reasons stated in our memorandum from Susan Kuhbach to Richard Moreland, dated March 31, 2000. Therefore, in accordance with section 751 (a)(3)(A) of the Act, we are postponing the preliminary results of this administrative review until no later than July 31, 2000.

This notice is published pursuant to section 777(i)(1) of the Act.

Dated: March 31, 2000.

Richard W. Moreland,

Deputy Assistant Secretary for Import Administration.

[FR Doc. 00–8565 Filed 4–5–00; 8:45 am]

BILLING CODE 3510–DS–P

DEPARTMENT OF COMMERCE

International Trade Administration

[C–533–807]

Notice of Correction to Final Results of Expedited Sunset Review: Sulfanilic Acid From India

AGENCY: Import Administration, International Trade Administration, Department of Commerce.

SUMMARY: On February 8, 2000, the Department of Commerce (the Department) published in the **Federal Register** the final results of the sunset review of the countervailing duty order on sulfanilic acid from India.[1] Subsequent to the publication of the final results, we identified an inadvertent error in the ''Final Results of Review'' section of the notice. Therefore, we are correcting and clarifying this inadvertent error.

The Department published a net subsidy rate, for all manufacturers/producers/exporters of sulfanilic acid from India, of 47.31 percent.[2] This rate was a typographical error. The net subsidy rate applicable to all manufacturers/producers/exporters of sulfanilic acid from India is 43.71 percent.

EFFECTIVE DATE: February 8, 2000.

FOR FURTHER INFORMATION CONTACT: Mark D. Young, Office of Policy for Import Administration, International Trade Administration, U.S. Department of Commerce, 14th Street & Constitution Avenue, NW, Washington, D.C. 20230: telephone (202) 482–1930.

This correction is issued and published in accordance with sections 751(h) and 777(i) of the Act.

Dated: March 31, 2000.

Robert S. LaRussa,

Assistant Secretary for Import Administration.

[FR Doc. 00–8564 Filed 4–5–00; 8:45 am]

BILLING CODE 3510–DS–P

DEPARTMENT OF COMMERCE

International Trade Administration

(C-489–502)

Certain Welded Carbon Steel Pipes and Tubes From Turkey; Preliminary Results of Countervailing Duty Administrative Review

AGENCY: Import Administration, International Trade Administration, Department of Commerce.

SUMMARY: The Department of Commerce (the Department) is conducting an administrative review of the countervailing duty order on certain welded carbon steel pipes and tubes from Turkey for the period January 1, 1998 through December 31, 1998. For information on the net subsidy for the reviewed companies, as well as for all non-reviewed companies, see the *Preliminary Results of Review* section of this notice. If the final results remain the same as these preliminary results of administrative review, we will instruct the U.S. Customs Service to assess countervailing duties as detailed in the *Preliminary Results of Review* section of this notice. Interested parties are invited to comment on these preliminary results. (*See Public Comment* section of this notice.)

EFFECTIVE DATE: April 6, 2000.

FOR FURTHER INFORMATION CONTACT: Michael Grossman or Stephanie Moore, Office of AD/CVD Enforcement VI, Import Administration, International Trade Administration, U.S. Department of Commerce, 14th Street and Constitution Avenue, NW, Washington, DC 20230; telephone: (202) 482–2786.

SUPPLEMENTARY INFORMATION:

Background

On March 7, 1986, the Department published in the **Federal Register** (51 FR 7984) the countervailing duty order on certain welded carbon steel pipes and tubes from Turkey. On March 9, 1999, the Department published a notice of ''Opportunity to Request Administrative Review'' (64 FR 11439) of this countervailing duty order. We received a timely request to conduct a review by Borusan Birlesik Boru Fabrikalari A.S. (BBBF). We initiated the review covering the period January 1, 1998 through December 31, 1998 on April 30, 1999 (64 FR 23269).

In accordance with 19 CFR 351.213(b), this review covers only those producers or exporters of the subject merchandise for which a review was specifically requested. Accordingly, this review covers BBBF and Borusan Ihracat Ithalat ve Dagitim A.S. (Dagitim), an affiliated trading company that exports BBBF produced subject merchandise to the United States (*see Treatment of Trading Company* section below). This review also covers 21 programs.

On November 10, 1999, the Department extended the period for completion of the preliminary results pursuant to section 751(a)(3)(A) of the Tariff Act of 1930, as amended (the Act). *See Certain Welded Carbon Steel Pipes and Tubes from Turkey: Extension of Preliminary Results of Countervailing Duty Administrative Review* (64 FR 61276). The deadline for the final results of this review is no later than 120 days from the date on which these preliminary results are published in the **Federal Register**.

Applicable Statute and Regulations

Unless otherwise indicated, all citations to the statute are references to the provisions of the Act, as amended by the Uruguay Round Agreements Act (URAA) effective January 1, 1995. In addition, unless otherwise indicated, all citations to the Department's regulations reference 19 CFR part 351 (1999).

Scope of the Review

Imports covered by this review are shipments from Turkey of certain welded carbon steel pipe and tube, having an outside diameter of 0.375 inch or more, but not more than 16 inches, of any wall thickness. These products, commonly referred to in the industry as standard pipe and tube or structural tubing, are produced to various American Society for Testing and Materials (ASTM) specifications, most notably A–53, A–120, A–135, A–500, or A–501. These products are classifiable under the Harmonized Tariff Schedule of the United States (HTSUS) as item number 7306.30.10. The HTSUS item numbers are provided for convenience and Customs purposes.

---

[1] See Notice of Final Results of Expedited Sunset Review: Sulfanilic Acid from India, 65 FR 6171 (February 8, 2000).

[2] See Notice of Final Results of Expedited Sunset Review: Sulfanilic Acid from India, 65 FR 6171, 6174 (February 8, 2000).

The written descriptions remain dispositive.

Organizational Background

The Borusan Group includes the following companies involved in the production and/or export of the subject merchandise: BBBF, Dagitim, Kartal Boru Ticaret ve Sanayi (Kartal Boru), and Mannesmann Boru A.S. (Mannesmann Boru) (collectively, ''Borusan Group''). BBBF manufactured steel pipes and tubes that were both sold in Turkey and exported to the United States during the period of review (POR). Exports are carried out through Dagitim, which handles the international marketing of goods produced by BBBF and other Borusan Group companies. Kartal Boru manufactures standard pipe products sold mainly domestically; it did not export standard pipe to the United States. On September 11, 1998, Borusan Holding purchased a stake in Mannesmann-Sumerbank Boru Endustrisi T.A.S. On December 22, 1998, Borusan Holding partnered with Mannesmannrohren-Werke A.G. to establish a joint venture named Borusan Mannesmann Boru Yatirim Holding (Borusan Mannesmann), which itself purchased a majority of BBBF's shares on the same day. Also on December 22, 1998, Borusan Mannesmann purchased a majority of Mannesmann-Sumerbank Boru Endustrisi T.A.S. Mannesmann Boru Endustrisi T.A.S. was renamed Mannesmann Boru A.S. (Mannesmann Boru) in early 1999. Mannesmann Boru did not export subject merchandise to the United States during the POR.

Treatment of Trading Company

During the POR, BBBF exported subject merchandise to the United States through Dagitim, a trading company. Dagitim is affiliated with BBBF within the meaning of section 771(33)(F) of the Act since both companies are under common ownership. The responses provided by the Borusan Group indicated that, during the POR, Dagitim did not receive any countervailable subsidies. A questionnaire response was required from the trading company because the subject merchandise may be subsidized by means of subsidies provided to both the producer and the exporter. All subsidies conferred on the production and exportation of subject merchandise benefit the subject merchandise even if it is exported to the United States by an unaffiliated trading company rather than by the producer itself. Therefore, the Department calculates countervailable subsidy rates on the subject merchandise by cumulating subsidies provided to the producer, with those provided to the exporter. *See* 19 CFR 351.525.

Under section 351.107 of the Department's Regulations, when the subject merchandise is exported to the United States by a company that is not the producer of the merchandise, the Department may establish a ''combination'' rate for each combination of an exporter and supplying producer. However, as noted in the ''Explanation of the Final Rules'' (the Preamble to the Department's Regulations), there may be situations in which it is not appropriate or practicable to establish combination rates when the subject merchandise is exported by a trading company. In such situations, the Department will make exceptions to its combination rate approach on a case-by-case basis. *See Antidumping Duties; Countervailing Duties; Final Rule,* 62 FR 27296; 27303 (May 19, 1997).

In this review, we preliminarily determine that it is not appropriate to establish combination rates. This preliminary determination is based on the fact that the subsidies conferred upon the subject merchandise were received by the producer only. Therefore, combination rates would serve no practical purpose because the calculated subsidy rate for BBBF and Dagitim would effectively be the same rate. For these reasons we are not calculating combination rates in this review. Instead, we have only calculated one rate for BBBF, the producer of the subject merchandise, which will also be the rate for Dagitim.

Calculation of Benefits

Despite a persistently high rate of inflation in Turkey, Turkish companies do not index any of the figures (other than fixed assets) in their financial statements to account for inflation. During the POR, the inflation rate in Turkey was 41 percent, as published in the 1998 Quarterly Bulletin by the Central Bank of Turkey. Indexing the benefit and the sales figures will neutralize any potential distortion in our subsidy calculations caused by high inflation and the timing of the receipt of the subsidy.

Therefore, to calculate the *ad valorem* subsidy rates, we indexed the benefits (numerator) in the month of receipt and indexed the monthly sales (denominator) for each program, as we did in *Certain Welded Carbon Steel Pipes and Tubes and Welded Carbon Steel Line Pipe from Turkey; Final Results of Countervailing Duty Administrative Reviews,* 64 FR 44496 (August 16, 1999) (*1997 Final Results*). *See*, for discussion, *Certain Welded Carbon Steel Pipes and Tubes and Welded Carbon Steel Line Pipe from Turkey*; *Preliminary Results of Countervailing Duty Administrative Reviews*, 64 FR 16924 (April 7, 1999) (*1997 Preliminary Results*). We indexed the sales values and the benefits using the Wholesale Price Index (WPI) for manufacturing companies in 1998, as reported by the Central Bank of Turkey.

The subsidies which we preliminarily determine to have provided benefits during the POR were an export subsidy and an import substitution subsidy. Since BBBF is the only company from which subject merchandise was exported, the export subsidy is attributable solely to BBBF's export sales. Similarly, since the benefit from the import substitution subsidy was tied to BBBF's purchase of equipment used in the production of subject merchandise, the benefit from this subsidy is attributable solely to BBBF's sales of subject merchandise.

Consolidation of BBBF and Mannesmann Boru under the Borusan Group ''umbrella'' occurred late in the POR. Additionally, only BBBF's production of subject merchandise was exported to the United States during the POR. Therefore, for purposes of this administrative review, we are not addressing whether BBBF and Mannesmann need to be collapsed. However, we will reexamine this issue in a future administrative review should one be requested.

Analysis of Programs

I. Programs Conferring Subsidies

A. Programs Previously Determined to Confer Subsidies

1. Pre-Shipment Export Credit

The Export Credit Bank of Turkey provides short-term pre-shipment export loans to exporters through intermediary commercial banks. The program is designed to support export-related industries. Loans are made to exporters who commit to export within a specified period of time. Generally, loans are extended for a period of up to 180 days, and cover up to 100 percent of the FOB export value. These loans are denominated in Turkish Lira (TL) and repaid in TL. The interest rate charged on these pre-shipment loans is established by the Turk Eximbank and is tied to the Central Bank's rediscount rate. In several previous determinations, including the *1997 Final Results*, and the *Final Affirmative Countervailing Duty Determination: Certain Pasta from Turkey*, 61 FR 30366 (June 14, 1996) (*Pasta from Turkey*), the Department

found this program to be countervailable because receipt of the loans is contingent upon export performance and the interest rates paid on these loans is less than the amount the recipient would pay on comparable commercial loans.

In the *1997 Final Results*, we found these loans to be untied and available for exported merchandise because the exporter has to only show that an export has taken place and provide the foreign currency exchange receipts from the commercial bank to close out the loan with Turk Eximbank. Because the loans are not specifically tied to a particular destination at the time of approval, we determined that the pre-shipment loan program is an untied export loan program. *See* 64 FR 44496, 44497. In this review, no new information or evidence of changed circumstances has been submitted to warrant reconsideration of the Department's prior findings.

Pursuant to section 771(5)(E)(ii) of the Act, a benefit shall be treated as conferred ''in the case of a loan, if there is a difference between the amount the recipient of the loan pays on the loan and the amount the recipient would pay on a comparable commercial loan that the recipient could actually obtain on the market.'' To calculate the rate the recipient would pay on a comparable commercial loan that could actually be obtained by it (*i.e.*, the benchmark interest rate), we are using company-specific interest rates on comparable commercial loans for all pre-shipment loans that were taken out by BBBF in 1997 and 1998, and repaid in 1998, with the exception of two pre-shipment export loans taken out in the third quarter of 1997, as discussed below. The rates on commercial loans provided to BBBF, which we have used as benchmarks, include the following customary fees: Bank Insurance and Services Tax (BIST), which is equal to five percent of the interest amount paid; the Resource Utilization Support Fund (RUSF) fee, equal to six percent of the interest paid; and a stamp tax equal to 0.6 percent of the principal.

In addition, because the Department continues to consider Turkey to have high inflation, we also preliminarily determine that it is appropriate to use quarterly average short-term interest rates where available, since BBBF pays interest quarterly on its short-term borrowings. Therefore, we have used as our benchmark interest rates, for all but two pre-shipment export loans, the quarterly rates paid on short-term commercial financing contracted by BBBF. This is consistent with the Department's practice in *Certain Welded Carbon Steel Pipe and Tube and Welded Carbon Steel Line Pipe From Turkey*; *Final Results and Partial Rescission of Countervailing Duty Administrative Reviews*, 63 FR 18885 (April 16, 1998) (*1996 Final Results*). *See*, for discussion, *Certain Welded Carbon Steel Pipes and Tubes and Welded Carbon Steel Line Pipe From Turkey*; *Preliminary Results and Partial Recission of Countervailing Duty Administrative Reviews,* 62 FR 64808 (December 9, 1997) (*1996 Preliminary Results*).

As mentioned, two pre-shipment export loans were contracted by BBBF during the third quarter of 1997. Since we do not have company-specific loan information for the third quarter of 1997 to use as a benchmark, we are using a simple average of the weekly short-term interest rates for Turkey for July through September, 1997, as published in *The Economist*. Use of *The Economist* for comprising a benchmark is consistent with the *1997 Final Results*, (*see Preliminary Results*, for discussion, 64 FR 16924, 16926). Using these benchmark rates, we continue to find these pre-shipment export loans countervailable because the interest rate charged is less than the rate for comparable commercial loans that the company could actually obtain in the market. Therefore, this program provides both a financial contribution under section 771(5)(D)(i), and confers a benefit under section 771(5)(E)(ii) of the Act.

Resolution No. 94/5782, Article 4, effective June 13, 1994, allows for the exemption of certain fees that are normally charged on loans, provided that the loans are used in financing exportation and other foreign exchange earning activities. For pre-shipment loans, which are denominated in TL, the fees that are exempted are the customary BIST, RUSF, and the stamp tax, all of which have been described above. The Department's current practice is normally to compare effective interest rates rather than nominal rates. ''Effective'' interest rates are intended to take account of the actual cost of the loan, including the amount of any fees, commissions, compensating balances, government charges or penalties paid in addition to the ''nominal'' interest rate. We have added the exempted customary banking fees to the benchmark interest rates, including those rates taken from *The Economist*, because we have previously determined exempted fees to be countervailable. *See e.g.*, *Certain Iron-Metal Castings from India: Final Results of Countervailing Duty Administrative Review,* 60 FR 44843 (August 29, 1995) (*Indian Castings*), and *1997 Preliminary Results*, 64 FR 16924, 16926.

To determine the benefit, we calculated the countervailable subsidy as the difference between actual interest paid on pre-shipment loans during the POR and the interest that would have been paid using the benchmark interest rates. This difference was indexed for inflation (as described above), and the result divided by the company's total export sales, which we also indexed for inflation. On this basis, we preliminarily determine the countervailable subsidy under this program to be 0.12 percent *ad valorem* for BBBF.

2. VAT Support Program (Incentive Premium on Domestically Obtained Goods)

The General Incentives Program (GIP) was established by the Government of the Republic of Turkey (GRT) and is designed to increase investment in Turkey and to expand the Turkish economy. Companies can apply to the GRT's Undersecretariat of the Treasury for investment encouragement certificates under the GIP, which entitle holders to specific benefits relating to the investment project. Companies holding investment certificates under the GIP have been eligible for the VAT Support Program, formerly known as the Incentive Premium on Domestically Obtained Goods, which provided a rebate of the 15 percent value added tax (VAT) paid on domestically-sourced machinery and equipment. In 1996, the GRT modified this program by providing an additional 10 percent of the rebated VAT amount to eligible companies, as a further investment incentive. Until August 1, 1998, imported machinery and equipment were subject to the VAT, but were not eligible for the rebate. However, General Comunique No. 69, dated August 14, 1998, states that as of August 1, 1998, all machinery and equipment, whether imported or locally-sourced, will be eligible for the VAT rebate when an investment certificate issued on or after August 1, 1998 is used for the purchase.

The Department determined in *Pasta from Turkey* (*see* 61 FR 30366, 30369), and in the *1996 Final Results* (*see 1996 Preliminary Results* for discussion, 62 FR 64808, 64811), that these VAT rebates are countervailable subsidies within the meaning of section 771(5)(D)(ii) of the Act because the rebates constitute revenue foregone by the GRT, and they provide a benefit in the amount of the VAT savings to the company. In this current review, we preliminarily determine that the savings is not only the VAT, but the additional

10 percent of the VAT that is added on to the rebate. Also, BBBF's benefits under this program are specific under section 771(5A)(C) because BBBF's receipt of benefits was contingent upon the use of domestic goods rather than imported goods during the POR. While the program was changed as of August 1, 1998 to include VAT exemptions on imported machinery and equipment, BBBF's investment certificates were issued prior to that date, therefore BBBF continued to receive the VAT rebate plus 10 percent only for its purchases of domestically-sourced machinery and equipment. Therefore, for purposes of this administrative review, we continue to find benefits under this program specific. Further, the Department determined that the benefits under the VAT Support Program are ''recurring,'' because once a company has received an investment incentive certificate it becomes eligible for the VAT Support Program benefits. The receipt of benefits is automatic; companies do not have to apply for new investment incentive certificates each year.

BBBF received six separate VAT rebates, plus 10 percent, under two different investment certificates as part of this program during the POR, for machinery and equipment purchases associated solely with the production of subject merchandise. In order to determine the net countervailable subsidy rate, we divided the amount received (indexed for inflation) by the company's sales of subject merchandise during the POR (indexed for inflation). On this basis, we preliminarily determine the net countervailable subsidy under this program to be 0.08 percent *ad valorem* for BBBF.

II. Program Preliminarily Determined To Be Not Countervailable

Special Importance Sector Under Investment Allowances

During the POR, BBBF was entitled to receive a 100 percent investment allowance on its corporate tax return because it modernized an existing facility under an investment certificate issued under the GIP. According to the GIP, modernization is considered to be a ''special importance sector'' investment. The special importance sector is a provision under the Investment Allowance program that allows companies a 100 percent corporate tax deduction of their fixed investment, regardless of the region in which the investment is made.

In order to determine whether the ''special importance sector'' benefits are specific, in law or in fact, to an enterprise or industry, as per section 771(5A)(D), we examined the following:

1. Whether the enabling legislation expressly limits access to the subsidy to an enterprise or industry;
2. Whether the actual recipients of the subsidy, whether considered on an enterprise or industry basis, are limited in number;
3. Whether an enterprise or industry is a predominant user of the subsidy;
4. Whether an enterprise or industry receives a disproportionately large amount of the subsidy; and
5. The manner in which the authority providing the subsidy has exercised discretion in the decision to grant the subsidy indicates that an enterprise or industry is favored over others.

An analysis of the first factor shows that the enabling legislation does not expressly limit access to an enterprise or industry; therefore, the subsidy is not *de jure* specific (specific as a matter of law).

In determining whether this program is specific in practice (*de facto* specificity), we examined information supplied by the GRT, including a breakdown of the number of companies within each industry and region that received special importance sector investment certificates in 1996, the year in which the GIP certificate issued to BBBF was used to claim the benefit on the tax return filed during the POR. This data shows that more than 4,500 certificates were issued to different companies in numerous and varied industries and regions throughout Turkey. The data also shows that the iron and steel industry was not a predominant user, nor has it received a disproportionate share of the benefits. Therefore, we preliminarily determine that this program is not specific, and therefore, is not countervailable.

III. Programs Preliminarily Determined To Be Not Used

We examined the following programs and preliminarily determined that the producers and/or exporters of the subject merchandise did not apply for or receive benefits under these programs during the POR:

A. Freight Program
B. Foreign Exchange Loan Assistance
C. Resource Utilization Support Fund
D. State Aid for Exports Program
E. Advance Refunds of Tax Savings
F. Export Credit Through the Foreign Trade Corporate Companies Rediscount Credit Facility (Eximbank)
G. Past Performance Related Foreign Currency Export Loans (Eximbank)
H. Export Credit Insurance (Eximbank)
I. Subsidized Turkish Lira Credit Facilities
J. Subsidized Credit for Proportion of Fixed Expenditures
K. Fund Based Credit
L. Investment Allowances (in excess of 30 percent minimum)
M. Resource Utilization Support Premium (RUSP)
N. Deduction from Taxable Income for Export Revenues
O. Regional Subsidies
   1. Additional Refunds of VAT (VAT + 10 percent)
   2. Postponement of VAT on Imported Goods
   3. Land Allocation (GIP)
   4. Taxes, Fees (Duties), Charge Exemption (GIP)

Preliminary Results of Review

In accordance with section 777A(e)(1) of the Act, we calculated an individual *ad valorem* subsidy rate for each producer/exporter subject to this administrative review. For the period January 1, 1998 through December 31, 1998, we preliminarily determine the net subsidy for BBBF and Dagitim to be 0.20 percent *ad valorem,* which is *de minimis.*

As provided for in 19 CFR 351.106(c)(1), any rate less than 0.5 percent *ad valorem* in an administrative review is *de minimis.* Accordingly, no countervailing duties will be assessed. If the final results of this review remain the same as these preliminary results, the Department intends to instruct the U.S. Customs Service to liquidate, without regard to countervailing duties, shipments of the subject merchandise from BBBF and Dagitim exported on or after January 1, 1998, and on or before December 31, 1998. Also, the cash deposit required for these companies will be zero.

Because the URAA replaced the general rule in favor of a country-wide rate with a general rule in favor of individual rates for investigated and reviewed companies, the procedures for establishing countervailing duty rates, including those for non-reviewed companies, are now essentially the same as those in antidumping cases, except as provided for in section 777A(e)(2)(B) of the Act. The requested review will normally cover only those companies specifically named. *See* 19 CFR 351.213(b). Pursuant to 19 CFR 351.212(c), for all companies for which a review was not requested, duties must be assessed at the cash deposit rate, and cash deposits must continue to be collected, at the rate previously ordered. As such, the countervailing duty cash deposit rate applicable to a company can no longer change, except pursuant to a request for a review of that company. *See Federal-Mogul*

Corporation and The Torrington Company v. *United States,* 822 F. Supp. 782 (CIT 1993) and *Floral Trade Council* v. *United States,* 822 F. Supp. 766 (CIT 1993). Therefore, the cash deposit rates for all companies except those covered by this review will be unchanged by the results of this review.

We will instruct Customs to continue to collect cash deposits for non-reviewed companies at the most recent company-specific or country-wide rate applicable to the company. Accordingly, the cash deposit rates that will be applied to non-reviewed companies covered by this order will be the rate for that company established in the most recently completed segment of this administrative proceeding under the Act, as amended by the URAA. If such a review has not been conducted, the rate established in the most recently completed administrative proceeding conducted pursuant to the statutory provisions that were in effect prior to the URAA amendments is applicable. *See Certain Welded Carbon Steel Pipe and Tube Products from Turkey; Final Results of Countervailing Duty Administrative Review,* 53 FR 9791 (March 25, 1988). These rates shall apply to all non-reviewed companies until a review is requested. In addition, for the period January 1, 1998 through December 31, 1998, the assessment rates applicable to all non-reviewed companies covered by this order are the cash deposit rates in effect at the time of entry.

Public Comment

Pursuant to 19 CFR 351.224(b), the Department will disclose to parties to the proceeding any calculations performed in connection with these preliminary results within five days after the date of publication of this notice. Pursuant to 19 CFR 351.309, interested parties may submit written comments in response to these preliminary results. Case briefs must be submitted within 30 days after the date of publication of this notice, and rebuttal briefs, limited to arguments raised in case briefs, must be submitted no later than five days after the time limit for filing case briefs. Parties who submit argument in this proceeding are requested to submit with the argument: (1) A statement of the issues, and (2) a brief summary of the argument. Case and rebuttal briefs must be served on interested parties in accordance with 19 CFR 351.303(f). Also, pursuant to 19 CFR 351.310, within 30 days of the date of publication of this notice, interested parties may request a public hearing on arguments to be raised in the case and rebuttal briefs. Unless the Secretary specifies otherwise, the hearing, if requested, will be held two days after the date for submission of rebuttal briefs. The Department will publish the final results of this administrative review, including the results of its analysis of issues raised in any case or rebuttal brief or at a hearing.

This notice serves as a preliminary reminder to importers of their responsibility to file a certificate regarding the reimbursement of countervailing duties prior to liquidation of the relevant entries during this review period. Failure to comply with this requirement could result in the Secretary's presumption that reimbursement of countervailing duties occurred and the subsequent assessment of double countervailing duties.

This administrative review is issued and published in accordance with section 751(a)(1) and 777(i)(1) of the Act (19 U.S.C. 1675(a)(1) and 19 U.S.C. 1677f(i)(1)).

Dated: March 30, 2000.

Robert S. LaRussa,

Assistant Secretary for Import Administration.

[FR Doc. 00–8572 Filed 4–5–00; 8:45 am]

BILLING CODE 3510–DS–P

DEPARTMENT OF COMMERCE

National Oceanic and Atmospheric Administration

[I.D. 032800D]

Groundfish Fisheries of the Bering Sea/Aleutian Islands Area and the Gulf of Alaska

AGENCY: National Marine Fisheries Service (NMFS), National Oceanic and Atmospheric Administration (NOAA), Commerce.

ACTION: Notice of availability; request for comments.

SUMMARY: NMFS is publishing a report summarizing the results of the scoping process used to initiate a programmatic supplemental environmental impact statement (SEIS) on Federal groundfish fishery management in the Exclusive Economic Zone (EEZ) off Alaska. The Scoping Report summarizes the scoping process, identifies issues raised during scoping, and describes the SEIS structure and content including alternatives for analysis that resulted from scoping.

DATES: Comments on the Scoping Report may be submitted until May 1, 2000.

ADDRESSES: Copies of the Scoping Report may be obtained from Steven K. Davis, phone or e-mail: 907–271–3523, or from steven.k.davis@noaa.gov or write to: NMFS, 222 West 7th Street, Room 517, Anchorage, AK 99508, or Carol Tocco, phone or e-mail: 907–586–7032 or carol.tocco@noaa.gov or write to: NMFS, Alaska Region, 709 West 9th Street, P.O. Box 21668, Juneau, AK 99802. The Scoping Report also is available on the NMFS, Alaska Region's World Wide Web site at www.fakr.noaa.gov.

Written comments on the scoping summary report should be submitted to Lori Gravel, National Marine Fisheries Service, Alaska Region, P.O. Box 21668, Juneau, AK 99802. Comments also may be hand delivered to Room 443–5, in the Federal Office Building, 907 West 9th Street, Juneau, AK, or sent via facsimile (fax) to 907–586–7255. Comments will not be accepted if submitted via e-mail or Internet.

FOR FURTHER INFORMATION CONTACT: Steven K. Davis, NMFS, 907–271–3523 or steven.k.davis@noaa.gov.

SUPPLEMENTARY INFORMATION:

(1) *Alternative 1* (no action), continue with existing management policy;

(2) *Alternative 2*, adopt a new management policy framework that emphasizes increased protection for marine mammals and seabirds;

(3) *Alternative 3*, adopt a new management policy framework that emphasizes increased protection for target groundfish species;

(4) *Alternative 4*, adopt a new management policy framework that emphasizes increased protection for non-target and forage fish species;

(5) *Alternative 5*, adopt a new management policy framework that emphasizes increased protection for fish habitat; and

(6) *Alternative 6*, adopt a new management policy framework that emphasizes an increase in long-term socioeconomic benefits.

Dated: March 31, 2000.

Bruce Morehead,

Director, Office of Sustainable Fisheries, National Marine Fisheries Service.

[FR Doc. 00–8397 Filed 3–31–00; 4:37 pm]

BILLING CODE 3510–22–F

CONSUMER PRODUCT SAFETY COMMISSION

Sunshine Act Meeting

AGENCY: U.S. Consumer Product Safety Commission, Washington, DC 20207.

TIME AND DATE: Thursday, April 13, 2000, 2 p.m.

LOCATION: Room 410, East West Towers, 4330 East West highway, Behtesda, Maryland.

STATUS: Closed to the Public.

MATTER TO BE CONSIDERED: Compliance Status Report.

The staff will brief the Commission on the status of various compliance matters.

For a recorded message containing the latest agenda information, call (301) 504–0709.

CONTACT PERSON FOR ADDITIONAL INFORMATION: Sadye E. Dunn, Office of the Secretary, 4330 East West Highway, Bethesda, MD 20207, (301) 504–0800.

Dated: April 3, 2000.

Sadye E. Dunn,

Secretary.

[FR Doc. 00–8585 Filed 4–3–00; 4:29 pm]

BILLING CODE 6355–01–M

DEPARTMENT OF EDUCATION

Notice of Proposed Information Collection Requests

AGENCY: Department of Education.

SUMMARY: The Leader, Information Management Group, Office of the Chief Information Officer, invites comments on the proposed information collection requests as required by the Paperwork Reduction Act of 1995.

DATES: Interested persons are invited to submit comments on or before June 5, 2000.

SUPPLEMENTARY INFORMATION: Section 3506 of the Paperwork Reduction Act of 1995 (44 U.S.C. Chapter 35) requires that the Office of Management and Budget (OMB) provide interested Federal agencies and the public an early opportunity to comment on information collection requests. OMB may amend or waive the requirement for public consultation to the extent that public participation in the approval process would defeat the purpose of the information collection, violate State or Federal law, or substantially interfere with any agency's ability to perform its statutory obligations. The Leader, Information Management Group, Office of the Chief Information Officer, publishes that notice containing proposed information collection requests prior to submission of these requests to OMB. Each proposed information collection, grouped by office, contains the following: (1) Type of review requested, *e.g.* new, revision, extension, existing or reinstatement; (2) Title; (3) Summary of the collection; (4) Description of the need for, and proposed use of, the information; (5) Respondents and frequency of collection; and (6) Reporting and/or Recordkeeping burden. OMB invites public comment.

The Department of Education is especially interested in public comment addressing the following issues: (1) Is this collection necessary to the proper functions of the Department; (2) will this information be processed and used in a timely manner; (3) is the estimate of burden accurate; (4) how might the Department enhance the quality, utility, and clarity of the information to be collected; and (5) how might the Department minimize the burden of this collection on the respondents, including through the use of information technology.

Dated: March 31, 2000.

William Burrow,

Leader, Information Management Group, Office of the Chief Information Officer.

Office of Postsecondary Education

Type of Review: New.

Title: The Evaluation of Exchange, Language, International and Area Studies (EELIAS), National Resource Centers (NRC), Foreign Language and Area Studies (FLAS) and Institute for International Public Policy (IIPP).

Frequency: Annually.

Affected Public: Not-for-profit institutions; Individuals or households.

Reporting and Recordkeeping Hour Burden:

Responses: 1,246.

Burden Hours: 9,932.

Abstract: Information collection assists the Office of International Education and Graduate Programs Servcie (IEGPS) in meeting program planning and evaluation requirements. Program officers require performance information to justify continuation funding, and grantees use this information for self evaluations and to request continuation funding from ED.

Requests for copies of the proposed information collection request may be accessed from *http://edicsweb.ed.gov,* or should be addressed to Vivian Reese, Department of Education, 400 Maryland Avenue, SW, Room 5624, Regional Office Building 3, Washington, D.C. 20202–4651. Requests may also be electronically mailed to the internet address OCIO IMG Issues@ed.gov or faxed to 202–708–9346. **Please specify the complete title of the information collection when making your request.**

Comments regarding burden and/or the collection activity requirements should be directed to Joseph Schubart at (202) 708–9266 or via his internet address Joe Schubart@ed.gov. Individuals who use a telecommunications device for the deaf (TDD) may call the Federal Information Relay Service (FIRS) at 1–800–877–8339.

[FR Doc. 00–8410 Filed 4–5–00; 8:45 am]

BILLING CODE 4000–01–U

DEPARTMENT OF EDUCATION

[CFDA No. 84.336]

Teacher Quality Enhancement Grants Program

AGENCY: Office of Postsecondary Education, Department of Education.

ACTION: Notice of pre-application technical assistance workshops.

SUMMARY: The Department of Education has scheduled four regional technical assistance workshops between April 13, 2000 and April 25, 2000, to help prospective applicants better understand the Department's approach to implementing the competitive grant process to be held in Spring 2000 under the Teacher Quality Enhancement Grants Program, authorized by Title II, sections 202–204 of the Higher Education Act of 1965, as amended (HEA). During 2000, the Department will be making awards under the State Grant and Partnership Grant components of the Program. For further information on these competitions, please refer to the U.S. Department of Education, Teacher Quality website at: http://www.ed.gov/offices/OPE/heatqp/index.html

SUPPLEMENTARY INFORMATION: At these workshops, the public will learn more about the purposes and requirements of this program, how to apply for funds, program eligibility requirements, and considerations that might help them to improve the quality of their grant applications. Department of Education staff with expertise on these and other issues related to the Teacher Quality Enhancement Grants Program will be available to answer any questions on these topics.

Dates, Times, and Locations

The dates, times, and locations of the technical assistance workshops are as follows:

1. April 13, 2000, 8:30 a.m. to 1 p.m., Arizona State University, Payne Bldg., Room 129, Tempe, Arizona (Registration: 8:30 to 9 a.m.) Contact Person: Kathy Langerman, (480) 965–3146 or kllang@asu.edu

2. April 18, 2000, 8:30 a.m. to 1 p.m., Boston College, Lower Dining Hall, Heights Room, 140 Commonwealth Avenue, Chestnut Hill, Massachusetts

(Registration: 8:30 to 9 a.m.) Contact Person: Pamela Herrup, (617) 552–0763 or herrup@bc.edu

3. April 20, 2000, 8:30 a.m. to 1 p.m., University of Wisconsin-Milwaukee, University Center for Continuing Education (UCCE), 161 W. Wisconsin Avenue, Room 7970, Milwaukee, Wisconsin (Registration: 8:30 to 9 a.m.) Contact Person: Linda Post, (414) 229–4884 or lpost@uwm.edu

4. April 25, 2000, 8:30 a.m. to 1 p.m., University of Miami, University Center, Section A, Flamingo Ballroom, 1306 Stanford Drive, Coral Gables, Florida (Registration: 8:30 to 9 a.m.) Contact Person: Martha Kairuz, (305) 284–5937 or mkairuz@umiami.ir.miami.edu.

Any interested parties are invited to attend these workshops.

Assistance to Individuals With Disabilities at the Technical Assistance Workshops

The meeting sites are accessible to individuals with disabilities. The Department will provide a sign language interpreter at each of the scheduled workshops. An individual with a disability who will need an auxiliary aid or service other than an interpreter to participate in the meeting (*e.g.,* assistive listening device, or materials in alternate format) should notify the contact person listed in the **FOR FURTHER INFORMATION CONTACT** section at least two weeks before the scheduled workshop date. Although we will attempt to meet a request received after this date, the requested auxiliary aid or service may not be available because of insufficient time to arrange it.

There is no pre-registration for these workshops. For additional workshop information, you may visit the Teacher Quality website at: http://www.ed.gov/offices/OPE/heatqp/index.html or contact the person designated as contact for each workshop site listed.

FOR FURTHER INFORMATION CONTACT: Brenda Shade, Teacher Quality Program Office: Department of Education, Office of Postsecondary Education; 1990 K Street NW; Washington, DC 20006. Inquiries may be sent by e-mail to Brenda /Shade@ed.gov (please type in the subject line:

PRE-APPLICATION WORKSHOP) or by fax to: (202) 502–7775. If you use a telecommunications device for the deaf (TDD), you may call the Federal Information Relay Service (FIRS) at 1–800–877–8339.

Individuals with disabilities may obtain this document in an alternate format (*e.g.,* Braille, large print, audiotape, or computer diskette) on request to the contact person cited in the preceding paragraph.

Electronic Access to This Document

You may view this document, as well as all other Department of Education documents published in the **Federal Register,** in text or Adobe Portable Document Format (PDF)) on the Internet at either of the following sites:

http://ocfo.ed.gov/fedreg.htm
http://www.ed.gov/news.html

To use the PDF you must have the Adobe Acrobat Reader Program with Search, which is available free at either of the previous sites. If you have questions about using the PDF, call the U.S. Government Printing Office (GPO) toll free at 1–888–293–6498; or in the Washington, DC area at (202) 512–1530.

Note: The official version of this document is the document published in the **Federal Register.** Free Internet access to the official edition of the **Federal Register** and the Code of Federal Regulations is available on GPO Access at: http://www.access.gpo.gov/nara/index.html

Dated: April 3, 2000.

Claudio R. Prieto,

Acting Assistant Secretary, Office of Postsecondary Education.

[FR Doc. 00–8522 Filed 4–5–00; 8:45 am]

BILLING CODE 4000–01–M

DEPARTMENT OF EDUCATION

President's Board of Advisors on Historically Black Colleges and Universities Meeting

AGENCY: President's Board of Advisors on Historically Black Colleges and Universities, U.S. Department of Education.

ACTION: Notice of meeting.

SUMMARY: This notice sets forth the schedule and agenda of the meeting of the President's Board of Advisors on Historically Black Colleges and Universities. This notice also describes the functions of the Board. Notice of this meeting is required under section 10(a)(2) of the Federal Advisory Committee Act. Individuals who will need accommodations for a disability in order to attend the meeting (*i.e.* interpreting services, assistive listening devices, materials in alternative format) should notify Treopia Washington at 202–502–7900 by no later than Tuesday, April 11, 2000.

DATE AND TIME: Tuesday, April 18, 2000 from 9 a.m. to 5 p.m.

ADDRESSES: The meeting will be held at Morgan State University, located at Cold Spring Lane and Hillen Road, Truth Hall, 4th Floor, Baltimore, MD 21239.

FOR FURTHER INFORMATION CONTACT: Ms. Treopia Washington, White House Initiative on Historically Black Colleges and Universities, U.S. Department of Education, 1990 K Street, NW, Suite 8108, Washington, DC 20006–5120. Telephone: (202) 502–7900.

SUPPLEMENTARY INFORMATION: The President's Board of Advisors on Historically Black Colleges and Universities was established under Executive Order 12876 of November 1, 1993. The Board was established to advise on federal policies that impact upon Historically Black Colleges and Universities, to advise on strategies to increase participation of Historically Black Colleges and Universities in federally sponsored programs and funding opportunities, and to advise on strategies to increase private sector support for these colleges.

The meeting of the Board is open to the public. The meeting will focus on the status and future of federal agency support for Historically Black Colleges and Universities. Records are kept of all Board procedures and are available for public inspection at the White House Initiative on Historically Black Colleges and Universities located at 1990 K. Street, NW, Suite 8099, Washington, DC, 20006, from the hours of 8:30 a.m. to 5 p.m.

Claudio R. Prieto,

Acting Assistant Secretary for Postsecondary Education.

[FR Doc. 00–8435 Filed 4–5–00; 8:45 am]

BILLING CODE 4000–01–P

DEPARTMENT OF ENERGY

Federal Energy Regulatory Commission

[Docket No. ER00–1975–000]

American Energy Savings, Inc.; Notice of Filing

March 31, 2000.

Take notice that on March 15, 2000, American Energy Savings, Inc. (AES) filed a petition for acceptance of AES Rate Schedule FERC No. 1; the granting of certain blanket approvals, including the authority to sell electricity at market-based rates; and the waiver of certain Commission Regulations.

AES intends to engage in wholesale electric power and energy purchases and sales as a marketer. AES is not in the business of generating or transmitting electric power. AES is a wholly-owned subsidiary of American Energy Savings, Inc.

Any person desiring to be heard or to protest such filing should file a motion to intervene or protest with the Federal Energy Regulatory Commission, 888

First Street, NE, Washington, DC 20426, in accordance with Rules 211 and 214 of the Commission's Rules of Practice and Procedure (18 CFR 385.211 and 385.214). All such motions and protests should be filed on or before April 10, 2000. Protests will be considered by the Commission to determine the appropriate action to be taken, but will not serve to make protestants parties to the proceedings. Any person wishing to become a party must file a motion to intervene. Copies of this filing are on file with the Commission and are available for public inspection. This filing may be viewed on the Internet at http://www.ferc.fed.us/online/rims.htm (call 202 208–2222 for assistance).

Linwood A. Watson, Jr.,

Acting Secretary.

[FR Doc. 00–8463 Filed 4–5–00; 8:45 am]

BILLING CODE 6717–01–M

DEPARTMENT OF ENERGY

Federal Energy Regulatory Commission

[Docket No. CP00–140–000]

Black Marlin Pipeline Company, WBI Offshore Pipeline, Inc.; MCNIC Black Marlin Offshore Company; Notice of Joint Application

March 31, 2000.

Take notice that on March 28, 2000, Black Marlin Pipeline Company (Black Marlin), 801 Travis, Suite 2100, Houston, Texas 77002, WBI Offshore Pipeline, Inc. (WBI), 1250 West Century Avenue, Bismarck, North Dakota 58501, and MCNIC Black Marlin Offshore Company (MCNIC), 1360 Post Oak Blvd., Suite 1500, Houston, Texas 77056 filed in Docket No. CP00–140–000 a joint application pursuant to Sections 7(c) and 7(b) of the Natural Gas Act (NGA) and Part 157 of the Commission's regulations for a certificate of public convenience and necessity reflecting WBI's and MCNIC's acquisition of one-sixth and one-third, respectively, of the undivided assets of the previously certificated Black Marlin facilities, and authorizing WBI and MCNIC to continue to use the facilities to transport natural gas under Black Marlin's existing tariff and authorizing Black Marlin to abandon by transfer the aforementioned interests to WBI and MCNIC all as more fully set forth in the application which is on file with the Commission and open to public inspection. The filing may be viewed at *http://www.ferc.fed.us/online/rims.htm* (call 202–208–2222 for assistance).

Any questions regarding the application should be directed to Robert T. Hall, Thelen Reid & Priest LLP, 701 Pennsylvania Avenue, NW, Washington, DC 20004, (202) 508–4000.

The applicants state that on March 1, 1999, Blue Dolphin Energy Company, through its wholly-owned subsidiary Black Marlin Energy Company, acquired 100% of the issued and outstanding stock of Black Marlin from Enron Pipeline Company. They aver that the transaction was a stock transfer not subject to Commission approval under Section of the NGA.

They also state that on March 1, 1999, WBI Southern, Inc., acquired from Black Marlin a one-sixth undivided interest in the Black Marlin Pipeline assets for a cash purchase price of $916,212. WBI Southern, Inc., has since created a wholly owned subsidiary, WBI Offshore Pipeline, Inc., and effective March 1, 1999, contemporaneous with the acquisition of the Black Marlin Pipeline assets, has assigned the Black Marlin Pipeline assets to WBI Offshore Pipeline, Inc.

In a concurrent transaction, the applicants state that MCNIC Offshore Pipeline & Processing Company acquired from Black Marlin a one-third undivided interest in the Black Marlin Pipeline assets for a cash purchase price of $1,801,424, plus the reimbursement to Black Marlin of certain out-of-pocket expenses in the amount of $31,000. MCNIC Offhore Pipeline & Processing Company has since created a wholly owned subsidiary, MCNIC Black Marlin Offshore Company, and effective March 1, 1999, contemporaneous with the acquisition of the Black Marlin Pipeline assets, has assigned those assets to MCNIC Black Marlin Offshore Company.

Finally, the applicants state that simultaneously with the transactions described above, Black Marlin, MCNIC, and WBI entered into (i) an Operating Agreement concerning the operation of the Black Marlin Pipeline pursuant to which Black Marlin was appointed the operator, and (ii) a Purchase Rights and Participation Agreement restricting the assignability of an interest in the assets of the Black Marlin Pipeline and the stock of the parties.

The applicants state that approval of the application will have no affect on the rates, operations, or tariff of Black Marlin. They aver that the sole purpose of the application is to have authorized by abandonment the transfer of an undivided interest in assets from Black Marlin to WBI and MCNIC.

Any person desiring to participate in the hearing process or to make any protest with reference to said application should on or before April 21, 2000, file with the Federal Energy Regulatory Commission, Washington, DC 20426, a motion to intervene or a protest in accordance with the requirements of the Commission's Rules of Practice and Procedure (18 CFR 385.214 or 385.211) and the Regulations under the NGA (18 CFR 157.10). All protests filed with the Commission will be considered by it in determining the appropriate action to be taken but will not serve to make the protestants parties to the proceeding. The Commission's rules require that protestors provide copies of their protests to the party or parties directly involved. Any person wishing to become a party to a proceeding or to participate as a party in any hearing therein must file a motion to intervene in accordance with the Commission's Rules.

Take further notice that, pursuant to the authority contained in and subject to the jurisdiction conferred upon the Federal Energy Regulatory Commission by Sections 7 and 15 of the NGA and the Commission's Rules of Practice and Procedure, a hearing will be held without further notice before the Commission or its designee on this application if no motion to intervene is filed within the time required herein, if the Commission on its own review of the matter finds that a grant of the certificate is required by the public convenience and necessity. If a motion for leave to intervene is timely filed, or if the Commission on its own motion believes that a formal hearing is required, further notice of such hearing will be duly given.

Under the procedure provided for, unless otherwise advised, it will be unnecessary for Black Marlin, WBI, or MCNIC to appear or be represented at the hearing.

Linwood A. Watson, Jr.,

Acting Secretary.

[FR Doc. 00–8468 Filed 4–5–00; 8:45 am]

BILLING CODE 6717–01–M

DEPARTMENT OF ENERGY

Federal Energy Regulatory Commission

[Docket No. RP98–54–030]

Colorado Interstate Gas Company; Notice of Offer of Settlement

March 31, 2000.

Take notice that on March 21, 2000, the Kansas Independent Oil and Gas Association (KIOGA), filed an Offer of Settlement relating to Kansas ad valorem taxes under Rule 602 of the

Commission's Rules of Practice and Procedure. KIOGA's Offer of Settlement is intended to provide appropriate relief for the royalty owners and the smaller working interest owners from the requirements of *Public Service Company of Colorado* v. *FERC*[1] and the Commission's subsequent orders. A copy of the Offer of Settlement is on file with the Commission and is available for public inspection in the Public Reference Room. The Offer of Settlement may be viewed on the web at *http://www.ferc.fed.us/online/rims.htm* (call 202–208–2222 for assistance).

KIOGA asserts that the public interest in eliminating claims against royalty owners and the smaller producers is manifest. Accordingly, KIOGA's Offer of Settlement, would:

(1) Eliminate all claims for the royalty portion of any refunds and interest with a credit of 25% of the total claim;

(2) Provide an additional $75,000 credit for each working interest in each claim; and

(3) Limit the claims to the total amount filed by each pipeline in November of 1997.

In accordance with section 385.602(f), initial comments on the Offer of Settlement are due on April 10, 2000 and any reply comments are due on April 20, 2000.

Linwood A. Watson, Jr.,

Acting Secretary.

[FR Doc. 00–8478 Filed 4–5–00; 8:45 am]

BILLING CODE 6717–01–M

[1] 91 F.3d 1478 (D.C. Cir., 1996), cert. denied 520 U.S. 1227 (1997).

DEPARTMENT OF ENERGY

Federal Energy Regulatory Commission

[Docket No. RP00–225–000]

Equitrans, L.P.; Notice of Proposed Changes in FERC Gas Tariff

March 30, 2000.

Take notice that on March 28, 2000, Equitrans, L.P. (Equitrans) tendered for filing as part of its FERC Gas Tariff, Original Volume No. 1, revised tariff sheets shown on Appendix A to the filing, with a proposed effective date of May 1, 2000.

Equitrans states that the purpose of this filing is correct typographical, grammatical errors, implement consistency in designation of Tariff Sheet Number and Section Number, and change of address, phone number, and facsimile number. Also, Equitrans is reinstating a line from a sentence in Section 6.7 in Rate Schedule 10SS that was inadvertently removed in Docket No. RP96–147.

Any person desiring to be heard or to protest said filing should file a motion to intervene or a protest with the Federal Energy Regulatory Commission, 888 First Street, NE, Washington, DC 20426, in accordance with sections 385.214 or 385.211 of the Commission's Rules and Regulations. All such motions or protests must be filed in accordance with section 154.210 of the Commission's Regulations. Protests will be considered by the Commission in determining the appropriate action to be taken, but will not serve to make protestants parties to the proceedings. Any person wishing to become a party must file a motion to intervene. Copies of this filing are on file with the Commission and are available for public inspection in the Public Reference Room. This filing may be viewed on the web at http://www.ferc.fed.us/online/rims.htm (call 202–208–2222 for assistance).

Linwood A. Watson, Jr.,

Acting Secretary.

[FR Doc. 00–8460 Filed 4–5–00; 8:45 am]

BILLING CODE 6717–01–M

DEPARTMENT OF ENERGY

Federal Energy Regulatory Commission

[Docket No. RP99–363–003]

Equitrans, L.P.; Notice of Proposed Changes in FERC Gas Tariff

March 31, 2000.

Take notice that on March 28, 2000, Equitrans, L.P. (Equitrans) tendered for filing as part of its FERC Gas Tariff, Original Volume No. 1, revised tariff sheet a proposed effective date of April 1, 2000.

First Revised Sheet No. 308

Equitrans states that the purpose of this filing is to comply with the Commission's Order issued on March 20, 2000. The order granted Equitrans a waiver of the GISB Standards (Version 1.3): Nomination Standards 1.4.1 through 1.4.7, Flowing Gas Standards 2.4.1 through 2.4.6, Invoicing Standards 3.4.1 through 3.4.4, EDM Standards 4.3.1 through 4.3.3, and to the extent applicable to EDI transactions, 4.3.9 through 4.3.15, Capacity Release Standards 5.4.1 through 5.4.17 until December 31, 2000. Equitrans is incorporating this waiver into its FERC Gas Tariff, Original Volume No. 1.

Any person desiring to protest this filing should file a protest with the Federal Energy Regulatory Commission, 888 First Street, NE, Washington, DC 20426, in accordance with Section 385.211 of the Commission's Rules and Regulations. All such protests must be filed as provided in Section 154.210 of the Commission's Regulations. Protests will be considered by the Commission in determining the appropriate action to be taken, but will not serve to make protestants parties to the proceedings. Copies of this filing are on file with the Commission and are available for public inspection in the Public Reference Room. This filing may be viewed on the web at http://www.ferc.fed.us/online/rims.htm (call 202–208–2222 for assistance).

Linwood A. Watson, Jr.,

Acting Secretary.

[FR Doc. 00–8474 Filed 4–5–00; 8:45 am]

BILLING CODE 6717–01–M

DEPARTMENT OF ENERGY

Federal Energy Regulatory Commission

[Docket Nos. CP00–129–000, CP00–130–000, and CP00–131–000]

Horizon Pipeline Company, L.L.C.; Notice of Applications for Certificates

March 31, 2000.

Take notice that on March 23, 2000, Horizon Pipeline Company, L.L.C. (Horizon or applicant), 747 E. 22nd Street, Lombard, Illinois 60148—5072, filed applications pursuant to and in accordance with section 7(c) of the Natural Act (NGA). In Docket No. CP00–129–000, Horizon seeks a certificate of public convenience and necessity to construct and operate approximately 28.5 miles of new 36-inch interstate natural gas pipeline and compression facilities, lease 380 MDth per day of firm capacity from Natural Gas Pipeline Company of America (Natural)[1] on 42 miles of its existing pipeline, and provide firm compression service for Natural. Further, in Docket No. CP00–130–000, Horizon requests a blanket certificate pursuant to Subpart F of Part 157 of the Commission's Regulations to perform certain routine activities and operations. In addition, in Docket No. CP00–131–000, Horizon seeks a blanket certificate pursuant to Subpart G of Part 284 of the Commission's Regulations to provide open-access transportation of

[1] Natural has filed simultaneously an application in Docket No. CP00–132–000 to abandon by lease to Horizon firm capacity and to construct and operate certain facilities.

natural gas for others. Horizon also seeks approval of its initial rates and pro forma tariff provisions included in its certificate application, all as more fully set forth in the applications which are on file with the Commission and open to public inspection. This filing may be viewed on the web at *http://www.herc.us/online/rims.htm* (call 202–208–2222).

Horizon is a limited liability company organized and existing under the laws of the State of Delaware. Horizon states that the two members of Horizon are Natural and Nicor-Horizon, Inc., a subsidiary of Nicor Inc. Horizon does not currently own any pipeline facilities and is not engaged in any natural gas transportation operations. Upon approval of the subject applications, Horizon will be a new interstate pipeline company subject to Commission jurisdiction under the NGA. Horizon proposes to provide gas transportation service from near Joliet, Illinois to near McHenry, Illinois. Horizon's proposed in-service date in April, 2002. Horizon requests that the Commission issue a preliminary determination on the non-environmental aspects of this proposal by September 15, 2000, and a final order granting the authorizations requested herein by March 1, 2001.

Horizon states that its natural gas pipeline project (''Horizon Project'' or the ''Project'') will accommodate the continued growth and increasing need for additional gas supply in northern Illinois. The Horizon Project will consist of 71 miles of high pressure pipeline, of which, Horizon will construct 28.5 miles of 36-inch pipe [2] and will use leased capacity from Natural along approximately 42 miles of Natural's existing pipe, a new compressor station with approximately 8,900 horsepower located at Natural's existing Compressor Station No. 113 (CS 113), meter stations, and mainline taps and valves along the new pipeline. Horizon's proposed compressor station will not only create the 380 MDth/d of leased capacity, but it will also provide Natural with the compression service needed to maintain Natural's current capacity along its south-to-north pipeline terminating near Volo, Illinois. Horizon will provide compression sufficient to allow Natural to move up to 170 MDth/d of its shipper customer's gas to Volo.

Horizon states that by leasing the 380 MDth per day of firm capacity from Natural, it will avoid the construction of 42 miles of new pipeline in a mostly congested area. Horizon has contacted with Natural for the leased capacity for an initial term of 20 years at $0.015 per Dth. According to Horizon, the lease payment will compensate Natural for its related costs in providing the lease capacity, including Natural's pro rata share of the fuel cost of Horizon's compression at CS 113 that it pays for the compression service provided by Horizon. Horizon states that Natural and its customers will not subsidize Horizon. Natural's capacity will not be decreased by the lease. Nor will Natural's customers suffer any economic detriment, because the revenues received by Natural will exceed the costs. Natural will continue to offer the same amount of capacity to its customers and they will continue to receive the same service at the same rates. Finally Horizon states that any costs that Natural incurs as a result of the Lease Agreement will be recovered through the lease payment from Horizon.

Horizon estimates that the total cost of the Project will be $75,411,000, excluding AFUDC. Horizon is proposing a 60/40 debt to equity capital structure. Currently, Horizon has been financed by equity furnished by its members, after certificate authority is obtained, the project will be financed primarily with debt during the construction phase, and at the in-service date the construction debt will be replaced with long-term debt (10-year).

Horizon held an open season between May 27 and June 25, 1999, as a result, Horizon has executed precedent agreements with two shippers for a total volume of 346 MDth/d firm service. According to Horizon, both shippers elected negotiated rates and a term of ten years. Horizon claims that one of the precedent agreements was executed with Nicor Gas, an affiliate of Nicor-Horizon, Inc., for the shipment of 300 MDth/d on Horizon. Horizon contends that Nicor Gas selected Horizon to serve the growing needs of its service territory, where about 30,000 customers are added each year. Horizon assert that there is a continuous increase in demand for natural gas in the northern counties of Illinois and the existing transportation service providers in the area are fully utilized, therefore there is a need for additional pipeline facilities. Horizon states that the second precedent agreement with Shipper A has been drafted to maintain its confidentiality because of the competitive nature of the electric power business. Horizon asserts that Shipper A is not affiliated with either of the Horizon members and that it has executed the precedent agreement for 46 MDth/d.

Horizon is proposing to lease and construct as part of this project an additional 34 MDth/d of capacity that will be used to serve projected near term demand growth in either the residential or power generation markets. Horizon recognizes that it will be at risk for any non-utilization of such capacity, given the fact that its rates are based on the project's design capacity of 380 MDth/d. Horizon will offer firm transportation service under Rate Schedule FTS and interruptible transportation service under Rate Schedule ITS on an open access, nondiscriminatory basis pursuant to Part 284 of the Commission's Regulations, and in accordance with its pro forma FERC Gas Tariff included with the application. Horizon states that its rates under Rate Schedule FTS are traditional cost-of-service based rates, designed under the Straight Fixed Variable (SFV) rate design methodology. These cost-of-service rates are Horizon's recourse rates. Horizon's states that its pro forma tariff provides for the negotiation, on a nondiscriminatory basis, of rates that differ from Horizon's generally applicable recourse rates. Horizon states that the shippers will have access to alternative receipt and delivery points and may use a capacity release mechanism.

Any questions regarding this application should be directed to James J. McElligott, Senior Vice President for Horizon, 747 East 22nd, Lombard, Illinois 60148 at (603) 691–3525, or Philip R. Telleen, Esquire, 747 East 22nd, Lombard, Illinois 60148 at (630) 691–3749.

Any person desiring to be heard or to make protest with reference to said application should on or before April 21, 2000, file with the Federal Energy Regulatory Commission, 888 First Street, NW, Washington, DC 20426, a motion to intervene or a protest in accordance with the requirements of the Commission's Rules of Practice and Procedure (18 CFR 385.211 or 385.214) and the regulations under the Natural Gas Act (18 CFR 157.10). All protests filed with the Commission will be considered by it in determining the appropriate action to be taken but will not serve to make the protestants parties to the proceeding. The Commission's rules require that protestors provide copies of their protests to the party or parties directly involved. Any person wishing to become a party to a proceeding or to participate as a party in any hearing therein must file a

[2] Horizon states that less than 2 miles of the total 28.5 miles will involve greenfield right-of-way; about 22 miles of the total 28.5 miles will use existing electric transmission right-of-way; 2 miles will be adjacent to existing pipeline right-of-way; and about 3 miles will be adjacent to existing pipeline right-of-way.

motion to intervene in accordance with the Commission's rules.

A person obtaining intervenor status will be placed on the service list maintained by the Commission and will receive copies of all documents filed by the Applicant and by every one of the intervenors. An intervenor can file for rehearing of any Commission order and can petition for court review of any such order. However, an intervenor must submit copies of comments or any other filing it makes with the Commission to every other intervenor in the proceeding, as well as 14 copies with the Commission.

A person does not have to intervene, however, in order to have comments considered. A person, instead, may submit two copies of comments to the Secretary of the Commission. Commenters will be placed on the Commission's environmental mailing list, will receive copies of environmental documents and will be able to participate in meetings associated with the Commission's environmental review process. Commenters will not be required to serve copies of filed documents on all other parties. However, commenters will not receive copies of all documents filed by other parties or issued by the Commission and will not have the right to seek rehearing or appeal the Commission's final order to a federal court.

The Commission will consider all comments and concerns equally, whether filed by commenters or those requesting intervenor status.

Take further notice that, pursuant to the authority contained in and subject to jurisdiction conferred upon the Commission by Sections 7 and 15 of the NGA and the Commission's Rules of Practice and Procedure, a hearing will be held without further notice before the Commission or its designee on this application if no motion to intervene is filed within the time required herein, if the Commission on its own review of the matter finds that a grant of the certificate is required by the public convenience and necessity. If a motion for leave to intervene is timely filed, or if the Commission on its own motion believes that a formal hearing is required, further notice of such hearing will be duly given.

Under the procedure herein provided for, unless otherwise advised, it will be unnecessary for Horizon to appear or be represented at the hearing.

Linwood A. Watson, Jr.,

Acting Secretary.

[FR Doc. 00–8461 Filed 4–5–00; 8:45 am]

BILLING CODE 6717–01–M

DEPARTMENT OF ENERGY

Federal Energy Regulatory Commission

[Project No. 2454–042; New York]

Minnesota Power, Inc.; Notice of Availability of Environmental Assessment

March 31, 2000.

An Environmental Assessment (EA) is available for public review. The EA analyzes the environmental effects of proposed changes to the project boundary for the Sylvan Hydroelectric Project located on the Crow Wing and Gull Rivers in Cass, Crow Wing, and Morrison Counties, Minnesota. The proposed boundary changes would result in the removal of a total of 20.42 acres of land from the project.

The EA was written by staff in the Office of Energy Projects, Federal Energy Regulatory Commission. Based on the environmental analyses presented in the EA, the Commission's staff finds that the proposed project boundary changes would not constitute a major federal action significantly affecting the quality of the human environment.

The EA has been attached to and made a part of an Order Amending License, issued March 21, 2000, for the Sylvan Hydroelectric Project (FERC No. 2454–042). The EA is available for inspection and reproduction at the Commission's Public Reference Room located at 888 First Street, NE, Room 2A, Washington DC 20426. Copies of the EA also may be obtained by calling (202) 208–1371, or by email at *Public.ReferenceRoom@ferc.fed.us.* The EA also may be viewed on the Commission's web site at *http://www.ferc.fed.us/online/rims.htm* (call (202) 208–2222 for assistance).

Linwood A. Watson, Jr.,

Acting Secretary.

[FR Doc. 00–8472 Filed 4–5–00; 8:45 am]

BILLING CODE 6717–01–M

DEPARTMENT OF ENERGY

Federal Energy Regulatory Commission

[Docket No. CP00–139–000]

National Fuel Gas Supply Corporation; Notice of Application

March 31, 2000.

Take notice that on March 29, 2000, National Fuel Gas Supply Corporation (National Fuel), 10 Lafayette Square, Buffalo, New York 14203, filed an application in Docket No. CP00–139–000 pursuant to Section 7(b) of the Natural Gas Act and Part 157 of the Commission's Regulations, for authority to abandon certain minor underground natural gas storage facilities, all as more fully set forth in the application on file with the Commission and open to public inspection. This filing may be viewed on the web at http://www.ferc.fed.us/online/rims.htm (call 202–208–2222 for assistance).

In its filing, National Fuel proposes to abandon facilities in Hebron Storage Field, jointly owned with Tennessee Gas Pipeline Company, in Potter County, Pennsylvania. National Fuel proposes to abandon Wells 4895 and 4960 and to abandon the associated well lines Y–W4895 and Y–W4960. The wells are no longer useful due to poor injection performance and poor deliverability and need to be reconditioned or plugged due to deterioration of well casings. The lines will serve no purpose once the wells are plugged and abandoned.

The two well lines total approximately 1,099 feet of 4-inch, 6-inch and 8-inch pipeline. Line Y–W4859 consists of 4-inch (16 feet), 6-inch (796 feet), and 8-inch (134 feet) line, totaling 946 feet in length and is connected to Well 4859. National Fuel proposes to abandon Line Y–W4859 in place, except for a 16 foot section starting at the well which will be removed in order to make room for the rig used in plugging the well. Line Y–W4960 consists of 4-inch and 6-inch line, totaling approximately 153 feet in length, and is connected to Well 4960. National Fuel proposes to remove Line YW–4960 in accordance with the procedures in the Environmental Report submitted as a part of National Fuel's application.

National Fuel avers that there will be no decrease in field performance, nor will there be any abandonment or decrease in service to customers as a result of the proposed abandonment of facilities. The cost of the project will be approximately $316,000, 86.1% of which shall be borne by Tennessee Gas Pipeline Company pursuant to the Hebron Storage Agreement.

National Fuel has contacted the affected landowners regarding this project. National Fuel certifies that all affected landowners will be notified as required by § 157.6(d) and Order No. 609.

Any questions regarding this application should be directed to David W. Reitz, Assistant General Counsel for National Fuel, 10 Lafayette Square, Buffalo, New York 14203 at (716) 857–7949.

Any person desiring to be heard or to make a protest with reference to said application should on or before April 21, 2000, file with the Federal Energy Regulatory Commission, 888 First Street, NE, Washington, DC 20426, a motion to intervene or protest in accordance with the requirements of the Commission's Rules of Practice and Procedure (18 CFR 385.214 or 385.211) and the Regulations under the Natural Gas Act (18 CFR 157.10). All protests filed with the Commission will be considered by it in determining the appropriate action to be taken but will not serve to make the protestant a party to the proceeding. Any person wishing to become a party to a proceeding or to participate as a party in any hearing therein must file a motion to intervene in accordance with the Commission's Rules.

A person obtaining intervener status will be placed on the service list maintained by the Secretary of the Commission and will receive copies of all documents filed by the applicant and by every one of the intervener. An intervener can file for rehearing of any Commission order and can petition for court review of any such order. However, an intervener must submit copies of comments or any other filings it makes with the Commission to every intervener in the proceeding, as well as an original and 14 copies with the Commission.

A person does not have to intervene, however, in order to have environmental comments considered. A person, instead, may submit two copies of comments to the Secretary of the Commission. Commenters will be placed on the Commission's environmental mailing list, will receive copies of environmental documents and will be able to participate in meetings associated with the Commission's environmental review process. Commenters will not be required to serve copies of filed documents on all other parties. However, commenters will not receive copies of all documents filed by other parties or issued by the Commission and will not have the right to seek rehearing or appeal the Commission's final order to a federal court. The Commission will consider all comments and concerns equally, whether filed by commenters or those requesting intervener status.

Take further notice that, pursuant to the authority contained in and subject to the jurisdiction conferred upon the Commission by Sections 7 and 15 of the Natural Gas Act and the Commission's Rules of Practice and Procedure, a hearing will be held without further review before the Commission or its designee on this application if no motion to intervene is filed within the time required herein, if the Commission on its own review of the matter finds that permission and approval for the proposed abandonment are required by the public convenience and necessity. If a motion for leave to intervene is timely filed, or if the Commission on its own motion believes that a formal hearing is required, further notice of such hearing will be duly given. Under the procedures herein provide for, unless otherwise advised, it will be unnecessary for National Fuel to appear or to be represented at the hearing.

Linwood A. Watson, Jr.,

Acting Secretary.

[FR Doc. 00–8466 Filed 4–5–00; 8:45 am]

BILLING CODE 6717–01–M

DEPARTMENT OF ENERGY

Federal Energy Regulatory Commission

[Docket No. CP00–132–000]

Natural Gas Pipeline Company of America; Notice of Application for Certificate

March 31, 2000.

Take notice that on March 23, 2000, Natural Gas Pipeline Company of America (Natural or Applicant), 747 E. 22nd Street, Lombard, Illinois 60148–5072, filed in Docket No. CP00–132–000 an application pursuant to sections 7(b) and 7(c) of the Natural Gas Act (NGA) for permission and approval to abandon, by operating lease to Horizon Pipeline Company, L.L.C. (Horizon),[1] firm capacity on its system, and for certificate authority to construct and operate certain facilities, all as more fully set forth in the application which are on file with the Commission and open to public inspection. This filing may be viewed on the web at *http://www.ferc.us/online/rims.htm* (call 202–208–2222).

Natural is seeking authority to abandon 380 MDth/d of firm capacity on its system by lease to Horizon pursuant to the terms of a Lease Agreement, dated January 18, 2000. Horizon will incorporate the leased capacity as part of its interstate pipeline system, thereby avoiding the need of building duplicate facilities. The leased capacity will run for a total of 42 miles, from an interconnection between Alliance Pipeline L.P. (Alliance) and Natural's Gulf Coast mainline (at a point approximately 9 miles south of Natural's Compressor Station 113 (CS 113) to the interconnection between Horizon's new pipeline and an existing 36-inch line of Natural (at a point approximately 33-miles north of CS 113). Central to the lease agreement is the construction and ownership by Horizon of a new 8,900 horsepower compressor at CS 113, which will have the effect of creating the 380 MDth/d of leased capacity.

The capacity lease, will also require Natural to construct certain new facilities and the rearrangement of certain existing Natural facilities. Specifically, Natural is seeking certificate authority to increase the horsepower of each of its nine 1,040 horsepower compressor units, totaling 9,360 horsepower, at CS 113, so that the new total will be 13,050 horsepower. Natural is also seeking to rearrange its 20-inch line that runs 63 miles north to Volo, Illinois and one of its 36-inch lines that runs north to Natural's Howard Street Lines[2] so that in the future the Howard Street Lines will be served by a 20-inch line and a 36-inch line, in conjunction with the nine Natural compressors at CS 113.[3] Natural seeks certificate authority for a tap at the interconnection with the new Horizon pipeline and a second tap at the point where the northern terminus of Horizon meets an existing west-to-east line of Natural. Natural also seeks certificate authority for revisions at its Streamwood meter station, which is at the start of the Howard Street Lines.

Natural states that neither Natural nor its customers will subsidize Horizon, because any costs to Natural will be more than offset by the lease payments it will receive from Horizon. Under the Lease Agreement, Horizon has contracted with Natural for an initial term of 20 years to lease capacity at $0.015 per Dth within a 42-mile section of Natural's pipeline system in Grundy, Will and DuPage Counties, Illinois. This lease payment compensates Natural for its related costs in providing the leased capacity, primarily the $7.8 million in facilities proposed by Natural in this application, but also the fuel associated with the maintenance of Natural's service to its customers.

Any questions regarding this application should be directed to James

[1] Horizon has simultaneously filed applications in Docket Nos. CP00–129–000, CP00–130–000, and CP00–131–000 to construct, own, lease, operate and maintain a new natural gas pipeline (Horizon Project) from Joliet, Illinois to McHenry, Illinois.

[2] A west-to-east system providing delivery capability to both Chicago and its northwestern suburbs.

[3] This arrangement will provide Howard Street Lines with service that is substantially the same as that is provided currently under the current facility arrangement.

J. McElligott, Senior Vice President for Natural, 747 East 22nd, Lombard, Illinois 60148 at (630) 691–3525, or Philip R. Telleen, Attorney for Natural, 747 East 22nd, Lombard, Illinois 60148 at (630) 691–3749.

Any person desiring to be heard or to make protest with reference to said application should on or before April 21, 2000, file with the Federal Energy Regulatory Commission, 888 First Street, NE., Washington, DC 20426, a motion to intervene or a protest in accordance with the requirements of the Commission's Rules of Practice and Procedure (18 CFR 385.211 or 385.214) and the regulations under the Natural Gas Act (18 CFR 157.10). All protests filed with the Commission will be considered by it in determining the appropriate action to be taken but will not serve to make the protestants parties to the proceeding. The Commission's rules require that protestors provide copies of their protests to the party or parties directly involved. Any person wishing to become a party to a proceeding or to practicipate as a party in any hearing therein must file a motion to intervene in accordance with the Commission's rules.

A person obtaining intervenor status will be placed on the service list maintained by the Commission and will receive copies of all documents filed by the Applicant and by every one of the intervenors. An intervenor can file for rehearing of any Commission order and can petition for court review of any such order. However, an intervenor must submit copies of comments or any other filing it makes with the Commission to every other intervenor in the proceeding, as well as 14 copies with the Commission.

A person does not have to intervene, however, in order to have comments considered. A person, instead, may submit two copies of comments to the Secretary of the Commission. Commenters will be placed on the Commission's environmental mailing list, will receive copies of environmental documents and will be able to participate in meetings associated with the Commission's environmental review process. Commenters will not be required to serve copies of filed documents on all other parties. However, commenters will not receive copies of all documents filed by other parties or issued by the Commission and will not have the right to seek rehearing or appeal the Commission's final order to a federal court.

The Commission will consider all comments and concerns equally, whether filed by commenters or those requesting intervenor status.

Take further notice that, pursuant to the authority contained in and subject to jurisdiction conferred upon the Commission by Sections 7 and 15 of the NGA and the Commission's Rules of Practice and Procedure, a hearing will be held without further notice before the Commission or its designee on this application if no motion to intervene is filed within the time required herein, if the Commission on its own review of the matter finds that a grant of the certificate is required by the public convenience and necessity. If a motion for leave to intervene is timely filed, or if the Commission on its own motion believes that a formal hearing is required, further notice of such hearing will be duly given.

Under the procedure herein provided for, unless otherwise advised, it will be unnecessary for Natural to appear or be represented at the hearing.

Linwood A. Watson, Jr.,

Acting Secretary.

[FR Doc. 00–8462 Filed 4–5–00; 8:45 am]

BILLING CODE 6717–01–M

DEPARTMENT OF ENERGY

Federal Energy Regulatory Commission

[Docket No. RP00–222–000]

Northern Natural Gas Company; Notice of Proposed Changes in FERC Gas Tariff

March 31, 2000.

Take notice that on March 27, 2000, Northern Natural Gas Company (Northern), tendered for filing in its FERC Gas Tariff, Fifth Revised Volume No. 1, the following tariff sheets proposed to be effective March 27, 2000:

Fifth Revised Sheet No. 286
Seventh Revised Sheet No. 287
Fourth Revised Sheet No. 288

Northern states that the purpose of this filing is to comply with Order No. 637 issued on February 9, 2000. Pursuant to Order No. 637 and redesignated Section 284.8(i), Northern is filing revised tariff sheets to remove the maximum rate for capacity release transactions of less than one year.

Northern further states that copies of the filing have been mailed to each of its customers and interested State Commissions.

Any person desiring to be heard or to protest said filing should file a motion to intervene or a protest with the Federal Energy Regulatory Commission, 888 First Street, NE, Washington, DC 20426, in accordance with sections 385.214 or 385.211 of the Commission's Rules and Regulations. All such motions or protests must be filed in accordance with section 154.210 of the Commission's Regulations. Protests will be considered by the Commission in determining the appropriate action to be taken, but will not serve to make protestants parties to the proceedings. Any person wishing to become a party must file a motion to intervene. Copies of this filing are on file with the Commission and are available for public inspection in the Public Reference Room. This filing may be viewed on the web at http://www.ferc.fed.us/online/rims.htm (call 202–208–2222 for assistance).

Linwood A. Watson, Jr.,

Acting Secretary.

[FR Doc. 00–8475 Filed 4–5–00; 8:45 am]

BILLING CODE 6717–01–M

DEPARTMENT OF ENERGY

Federal Energy Regulatory Commission

[Docket No. RP00–223–000]

Northern Natural Gas Company; Notice of Proposed Changes in FERC Gas Tariff

March 31, 2000.

Take notice that on March 27, 2000, Northern Natural Gas Company (Northern) tendered for filing to become part of Northern's FERC Gas Tariff, Fifth Revised Volume No. 1, the following tariff sheets to become effective April 27, 2000:

Fourth Revised Sheet No. 1
Fifth Revised Sheet No. 2
52 Revised Sheet No. 51
48 Revised Sheet No. 53
Third Revised Sheet No. 115
First Revised Sheet No. 125A
Original Sheet No. 125B
Original Sheet No. 125C
Original Sheet No. 125D
Original Sheet No. 125E
Original Sheet No. 125F
Third Revised Sheet No. 143
Eighth Revised Sheet No. 144
Second Revised Sheet No. 145
Fifth Revised Sheet No. 206
Fourth Revised Sheet No. 220
First Revised Sheet No. 251
Third Revised Sheet No. 252
Fourth Revised Sheet No. 225
Second Revised Sheet No. 261
Fifth Revised Sheet No. 263A
Third Revised Sheet No. 264
Fifth Revised Sheet No. 265
First Revised Sheet No. 271
Second Revised Sheet No. 290
Third Revised Sheet No. 300
Third Revised Sheet No. 302

Third Revised Sheet No. 414
Second Revised Sheet No. 415
Second Revised Sheet No. 416

Northern states that it is submitting these tariff sheets to implement a Limited Firm Throughput Service under new Rate Schedule LFT. Under this Rate Schedule, firm transportation service would be available subject to Northern's right to not schedule service in whole or in part on any day (a Limited Day), but not more than a maximum number of Limited Days per month (not to exceed ten) agreed to by Northern and Shipper in the LFT Service Agreement. Northern is proposing this service to offer greatly flexibility to shippers, and to address the needs of shippers that generally require firm service but are able to accommodate periodic interruption of service.

Northern states that copies of the filing were served upon Northern's customers and interested State Commissions.

Any person desiring to be heard or to protest said filing should file a motion to intervene or a protest with the Federal Energy Regulatory Commission, 888 First Street, NE., Washington, DC 20426, in accordance with sections 385.214 or 385.211 of the Commission's Rules and Regulations. All such motions or protests must be filed in accordance with section 154.210 of the Commission's Regulations. Protests will be considered by the Commission in determining the appropriate action to be taken, but will not serve to make protestants parties to the proceedings. Any person wishing to become a party must file motion to intervene. Copies of this filing are on file with the Commission and are available for public inspection in the Public Reference Room. This filing may be viewed on the web at http://www.ferc.fed.us/online/rims.htm (call 202–208–2222 for assistance).

Linwood A. Watson, Jr.,
Acting Secretary.
[FR Doc. 00–8476 Filed 4–5–00; 8:45 am]
BILLING CODE 6717–01–M

DEPARTMENT OF ENERGY

Federal Energy Regulatory Commission

[Docket No. ER00–536–000]

Southwestern Public Service Company; Notice of Informal Settlement Conference

March 31, 2000.

Take notice that an informal settlement conference will be convened in this proceeding on Tuesday, April 11, 2000, at 9:00 a.m., at the offices of the Federal Energy Regulatory Commission, 888 First Street, NE, Washington, DC, for the purpose of exploring settlement in the above-referenced docket.

Any party, as defined by 18 CFR 385.102(c), or any participant, as defined by 18 CFR 385.102(b), is invited to attend. Persons wishing to become a party must move to intervene and receive intervenor status pursuant to the Commission's regulations (18 CFR 385.214.

For additional information, contact J. Carmen Gastilo at (202) 208–2182 or Anja M. Clark at (202) 208–2034.

Linwood A. Watson, Jr.,
Acting Secretary.
[FR Doc. 00–8469 Filed 4–5–00; 8:45 am]
BILLING CODE 6717–01–M

DEPARTMENT OF ENERGY

Federal Energy Regulatory Commission

[Docket No. CP00–135–000]

Texas Gas Transmission Corporation, Tennessee Gas Pipeline Company; Notice of Application

March 31, 2000.

Take notice that on March 23, 2000, Texas Gas Transmission Corporation (Texas Gas), P.O. Box 20008, Owensboro, Kentucky 42304, and Tennessee Gas Pipeline Company (Tennessee), 1001 Louisiana, P.O. Box 2511, Houston, Texas 77252–2511, filed in Docket No. CP00–135–000 an application pursuant to Sections 7(b) and 7(c) of the Natural Gas Act for permission and approval for Texas Gas to abandon by sale its interest in certain jointly owned supply lateral facilities in offshore Louisiana and for Tennessee to acquire and own these facilities, all as more fully set forth in the application which is on file with the Commission and open to public inspection. This filing may be viewed on the web at http://www.ferc.fed.us/online/rims.htm (call 202–208–2222; for assistance).

The joint application requests authorization for (1) Texas Gas to abandon by sale to Tennessee its interest in certain jointly owned supply lateral facilities and appurtenances in the Eugene Island and ship Shoal areas, offshore Louisiana, and (2) Tennessee to acquire and own Texas Gas' interest in such facilities.

Texas Gas declares that these facilities are no longer integral to their current role as an open access transporter and abandonment of its interest in the subject facilities will enable Texas Gas to streamline its transmission operations. Tennessee states that after approval is granted for the acquisition by Tennessee of Texas Gas' interest in these facilities, any shippers desiring access to the supplies attached to these laterals will be able to obtain transportation service from Tennessee pursuant to its Commission-approved tariff, thus none of the interruptible shippers currently utilizing Texas Gas' capacity in these facilities will be subject to a diminution or termination of service.

Tennessee declares that it will pay $102,870.79 for Texas Gas' interest in the identified supply lateral facilities. Texas Gas states that it has agreed to reimburse Tennessee for actual costs incurred by Tennessee not to exceed $100,000 for reconditioning the Eugene Island 342C pipeline in return for Tennessee's assumption of all retirement and abandonment costs associated with the facilities.

Any questions regarding the application should be directed to David N. Roberts, Manager of Certificates and Tariffs, at (270) 688–6712, Texas Gas Transmission Corporation, P.O. Box 20008, Owensboro, Kentucky 42304.

Any person desiring to be heard or to make any protest with reference to said Application should on or before April 21, 2000, file with the Federal Energy Regulatory Commission, 888 First Street, NE, Washington, DC 20426, a motion to intervene or a protest in accordance with the requirements of the Commission's Rules of Practice and Procedure (18 CFR 385.211 or 18 CFR 385.214) and the Regulations under the Natural Gas Act (18 CFR 157.10). All protests filed with the Commission will be considered by it in determining the appropriate action to be taken but will not serve to make the protestants parties to the proceeding. Any person wishing to become a party to a proceeding or to participate as a party in any hearing therein must file a motion to intervene in accordance with the Commission's Rules.

Take further notice that pursuant to the authority contained in and subject to the jurisdiction conferred upon the Commission by Sections 7 and 15 of the Natural Gas Act and the Commission's Rules of Practice and Procedure, a hearing will be held without further notice before the Commission or its designee on this Application if no petition to intervene is filed within the time required herein, if the Commission on its own review of the matter finds that a grant of the abandonment is required by the public convenience and necessity. If a petition for leave to

intervene is timely filed, or if the Commission, on its own motion believes that a formal hearing is required, further notice of such hearing will be duly given.

Under the procedure herein provided for, unless otherwise advised, it will be unnecessary for Applicant to appear or be represented at the hearing.

Linwood A. Watson, Jr.,

Acting Secretary.

[FR Doc. 00–8467 Filed 4–5–00; 8:45 am]

BILLING CODE 6717–01–M

DEPARTMENT OF ENERGY

Federal Energy Regulatory Commission

[Docket No. CP99–392–000; Docket No. CP00–17–000]

Transcontinental Gas Pipe Line Corp.; South Carolina Public Service Authority; Notice of Availability of the Environmental Assessment for the Proposed Southcoast Expansion Project and Santee Cooper Natural Gas Pipeline Project

March 31, 2000.

The staff of the Federal Energy Regulatory Commission (FERC or Commission) has prepared an environmental assessment (EA) on the natural gas pipeline facilities proposed by Transcontinental Gas Pipe Line Corporation (Transco) and the South Carolina Public Service Authority (Santee Cooper) in the above-referenced dockets.

The EA was prepared to satisfy the requirements of the National Environmental Policy Act. The staff concludes that approval of the proposed project, with appropriate mitigating measures, would not constitute a major Federal action significantly affecting the quality of the human environment.

The EA assesses the potential environmental effects of the construction and operation of the proposed underground gas pipeline loops and aboveground facilities including:

- About 11.3 miles of a 42-inch-diameter pipeline loop (designated as Loop E) in Choctaw and Marengo Counties, Alabama; installation of a pig launcher upstream of the loop in Choctaw County; and installation of a pig receiver and liquid scrubber at Station 90 in Marengo County;
- About 13.9 miles of a 48-inch-diameter pipeline loop (designated as Loop E) in Marengo, Perry and Dallas Counties, Alabama; and relocation of an existing pig receiver currently at the origin of the loop in Marengo County to the ending point in Dallas County;
- About 19 miles of a 24-inch-diameter pipeline loop (designated as the North Georgia Extension Loop) in Walton and Gwinnett Counties, Georgia; installation of a new pig launcher and valve at Station 125 in Walton County; and installation of a new pig receiver and valve at the terminus of the loop in Gwinnett County;
- About 2.1 miles of a 16-inch-diameter pipeline (designated as the Santee Cooper pipeline) to connect the planned Rainey Generating Station in Anderson County, South Carolina, to the Transco system at a new delivery tap and meter station in Hart County, Georgia;
- Addition of a new 15,000 horsepower (hp) gas turbine-powered compressor unit at Compressor Station 105 in Coosa County, Alabama;
- Addition of a new 16,500 hp electric motor driven compressor unit and gas coolers at Compressor Station 115 in Coweta County, Georgia;
- Rewheeling of Compressor Unit 16 at Compressor Station 120 in Henry County, Georgia; and
- Installation of new suction piping at Compressor Station 100 in Chilton County, Alabama, to allow sufficient gas to flow to Compressor Unit 10.

The purpose of the proposed facilities would be to provide about 204,099 dekatherms per day of new firm transportation capacity on Transco's existing system, and to provide up to 80,000 dt/day to Santee Cooper's planned Rainey Generating Station. Transco is proposing the project in order to meet projected growth needs of twelve of its natural gas customers in the southeastern market. The proposed Rainey Generating Station is needed to meet current and future growth in Santee Cooper's marketing area while maintaining adequate reserve of electric power.

The EA has been placed in the public files of the FERC. A limited number of copies of the EA are available for distribution and public inspection at: Federal Energy Regulatory Commission, Public Reference and Files Maintenance Branch, 888 First Street, N.E., Room 2A, Washington, DC 20426, (202) 208–1371.

Copies of the EA have been mailed to Federal, state and local agencies, public interest groups, interested individuals, newspapers, and parties to this proceeding.

Any person wishing to comment on the EA may do so. To ensure consideration prior to a Commission decision on the proposal, it is important that we receive your comments before the date specified below. Please carefully follow these instructions to ensure that your comments are received in time and properly recorded:

- Send two copies of your comments to: Secretary, Federal Energy Regulatory Commission, 888 First St., N.E., Room 1A, Washington, DC 20426;
- Label one copy of the comments for the attention of the Environmental Review and Compliance Branch, PJ–11.2;
- Reference Docket Nos. CP99–392–000 and CP00–17–000; and
- Mail your comments so that they will be received in Washington, DC on or before May 1, 2000.

Comments will be considered by the Commission but will not serve to make the commenter a party to the proceeding. Any person seeking to become a party to the proceeding must file a motion to intervene pursuant to Rule 214 of the Commission's Rules of Practice and Procedures (18 CFR 385.214).

The date for filing timely motions to intervene in this proceeding has passed. Therefore, parties now seeking to file late interventions must show good cause, as required by section 385.214(b)(3), why this time limitation should be waived. Environmental issues have been viewed as good cause for late intervention. You do not need intervenor status to have your comments considered.

Linwood A. Watson, Jr.,

Acting Secretary.

[FR Doc. 00–8464 Filed 4–5–00; 8:45 am]

BILLING CODE 6717–01–M

DEPARTMENT OF ENERGY

Federal Energy Regulatory Commission

[Docket No. RP00–224–000]

Transwestern Pipeline Company; Notice of Proposed Changes in FERC Gas Tariff

March 31, 2000.

Take notice that on March 27, 2000, Transwestern Pipeline Company (Transwestern), tendered for filing in its FERC Gas Tariff, Second Revised Volume No. 1, the following tariff sheets proposed to be effective March 27, 2000:

Third Revised Sheet No. 18
Seventh Revised Sheet No. 19
Third Revised Sheet No. 27
Seventh Revised Sheet No. 95A
Sixth Revised Sheet No. 95E
Sixth Revised Sheet No. 95F
Third Revised Sheet No. 951
Third Revised Sheet No. 95J
Fifth Revised Sheet No. 95K

Transwestern states that the purpose of this filing is to comply with Order No. 637 issued on February 9, 2000. Pursuant to Order No. 637, Transwestern is filing revised tariff sheets to: (1) Remove the maximum price cap for capacity release transactions of less than one year; and(2) Modify the Right of First Refusal provisions to apply only to maximum rate contracts as of March 27, 2000 with twelve or more consecutive months of service. Transwestern is also modifying its capacity release provisions to relabel the posting and bidding procedure for pre-arranged deals.

Transwestern further states that copies of the filing have mailed to each of its customers and interested State Commissions.

Any person desiring to be heard or to protest said filing should file a motion to intervene or a protest with the Federal Energy Regulatory Commission, 888 First Street, N.E., Washington, D.C. 20426, in accordance with Sections 85.214 or 385.211 of the Commission's Rules and Regulations. All such motions or protests must be filed in accordance with section 154.210 of the Commission's Regulations. Protests will be considered by the Commission in determining the appropriate action to be taken, but will not serve to make protestants parties to the proceedings. Any person wishing to become a party must file a motion to intervene. Copies of this filing are on file with the Commission and are available for public inspection in the Public Reference Room. This filing may be viewed on the web at http://www.ferc.fed.us/online/rims.htm (call 202–208–2222 for assistance).

Linwood A. Watson, Jr.,

Acting Secretary.

[FR Doc. 00–8477 Filed 4–5–00; 8:45 am]

BILLING CODE 6717–01–M

DEPARTMENT OF ENERGY

Federal Energy Regulatory Commission

[Docket No. CP00–48–000]

Tennessee Gas Pipeline Company; Notice of Intent To Prepare an Environmental Assessment for the Proposed Londonderry Replacement Project and Request for Comments on Environmental Issues

March 31, 2000.

The staff of the Federal Energy Regulatory Commission (FERC of Commission) will prepare an environmental assessment (EA) that will discuss the environmental impacts of the Londonderry Replacement Project involving construction and operation of facilities by Tennessee Gas Pipeline company (Tennessee Gas) in Middlesex County, Massachusetts, and Hillsborough and Rockingham Counties, New Hampshire.[1] These facilities would consist of about 19.3 miles of 20-inch-diameter pipeline replacing 8-inch-diameter pipeline. Tennessee Gas proposes to locate the new pipeline in the same right-of-way occupied by the replaced pipeline and a 12-inch-diameter pipeline that would remain in place. This EA will be used by the Commission in its decision-making process to determine whether the project is in the public convenience and necessity.

If you are a landowner receiving this notice, you may be contacted by a pipeline company representative about the replacement of the pipeline or acquisition of an easement to construct, operate, and maintain the proposed facilities. The pipeline company would seek to negotiate a mutually acceptable agreement. However, if the project is approved by the Commission, that approval conveys with it the right of eminent domain. Therefore, if easement negotiations fail to produce an agreement, the pipeline company could initiate condemnation proceedings in accordance with state law.

A fact sheet prepared by the FERC entitled ''An Interstate Natural Gas Facility On My Land? What Do I Need To Know?'' was attached to the project notice Tennessee Gas provided to landowners. This fact sheet addresses a number of typically asked questions, including the use of eminent domain and how to participate in the Commission's proceedings. It is available for viewing on the FERC Internet website (www.ferc.fed.us).

Summary of the Proposed Project

Tennessee Gas wants to expand the capacity of its facilities in Massachusetts and New Hampshire to transport 130,000 dekatherms per day (dthd) of natural gas to the AES–Londonderry Project proposed by AES Enterprises (AES). The AES–Londonderry Project is a 720-megawatt, natural gas-fired combined cycle power plant. Tennessee Gas seeks authority to construct and operate

- 19.3 miles of 20-inch-diameter pipeline in Middlesex County, Massachusetts, and Hillsborough and Rockingham Counties, New Hampshire;
- A new 130,000 dthd meter site adjacent to the existing Londonderry Meter Station in Rockingham County, New Hampshire; and
- Four new mainline valves.

The 20-inch-diameter pipeline and three of the mainline valves will replace 19.3 miles of the existing 8-inch-diameter Concord #1 Lateral (270B–100) from Valve 270B—103 in Dracut, Massachusetts, to the Londonderry Meter Station in Londonderry, New Hampshire, and three associated 8-inch mainline valves.

The location of the project facilities is shown in appendix 1.[2]

Land Requirements for Construction

Construction of the proposed facilities would require about 182.2 acres of land. Following construction, about 92.5 acres would be maintained for the new facility sites, however, all of this area would be within the existing right-of-way. The remaining 89.7 acres of land would be restored and allowed to revert to its former use.

The EA Process

The National Environmental Policy Act (NEPA) requires the Commission to take into account the environmental impacts that could result from an action whenever it considers the issuance of a Certificate of Public Convenience and Necessity. NEPA also requires us to discover and address concerns the public may have about proposals. We call this ''scoping''. The main goal of the scoping process is to focus the analysis in the EA on the important environmental issues. By this Notice of Intent, the Commission requests public comments on the scope of the issues it will address in the EA. All comments received are considered during the preparation of the EA. State and local government representatives are encouraged to notify their constituents of this proposed action and encourage them to comment on their areas of concern.

The EA will discuss impacts that could occur as a result of the construction and operation of the proposed project under these general headings:

- geology and soils
- water resources, fisheries, and wetlands

[1] Tennessee Gas's application was filed with the Commission under Section 7 of the Natural Gas Act and Part 157 of the Commission's regulations.

[2] The appendices referenced in this notice are not being printed in the **Federal Register**. Copies are available on the Commission's website at the ''RIMS'' link or from the Commission's Public Reference and Files Maintenance Branch, 888 First Street, NE., Washington, DC 20426, or call (202) 208–1371. For instructions on connecting to RIMS refer to the last page of this notice. Copies of the appendices were sent to all those receiving this notice in the mail.

- vegetation and wildlife
- public safety
- land use
- cultural resources
- endangered and threatened species

We will also evaluate possible alternatives to the proposed project or portions of the project, and make recommendations on how to lessen or avoid impacts on the various resource areas.

Our independent analysis of the issues will be in the EA. Depending on the comments received during the scoping process, the EA may be published and mailed to Federal, state, and local agencies, public interest groups, interested individuals, affected landowners, newspapers, libraries, and the Commission's official service list for this proceeding. A comment period will be allotted for review if the EA is published. We will consider all comments on the EA before we make our recommendations to the Commission.

To ensure your comments are considered, please carefully follow the instructions in the public participation section below.

Currently Identified Environmental Issues

We have already identified several issues that we think deserve attention based on a preliminary review of the proposed facilities and the environmental information and comments provided by Tennessee Gas and intervenors. This preliminary list of issues may be changed based on your additional comments and our analysis.

- Eight federally listed endangered or threatened species may occur in the proposed project area.
- A total of about 46 acres of wetlands would be crossed.
- At least 52 residences and 4 apartment complexes would be located within 50 feet of the proposed construction work area.
- Two school properties would be crossed.

Also, we have made a preliminary decision to not address the impacts of the nonjurisdictional facilities since the AES-Londonderry Project has been approved by the state and has received all necessary Federal permits. We will briefly describe their location and status in the EA.

Public Participation

You can make a difference by providing us with your specific comments or concerns about the project. By becoming a commentor, your concerns will be addressed in the EA and considered by the Commission. You should focus on the potential environmental effects of the proposal, alternatives to the proposal (including alternative routes), and measures to avoid or lessen environmental impact. The more specific your comments, the more useful they will be. Please carefully follow these instructions to ensure that your comments are received in time and properly recorded.

- Send two copies of your letter to: David P. Boergers, Secretary, Federal Energy Regulatory Commission, 888 First St., NE, Room 1A, Washington, DC 20426.
- Label one copy of the comments for the attention of OEP-Gas 2.
- Reference Docket No. CP00–48–000.
- Mail your comments so that they will be received in Washington, DC on or before May 1, 2000.

If you do not want to send comments at this time but still want to remain on our mailing list, please return the Information Request (appendix 3). If you do not return the Information Request, you will be taken off the mailing list.

Becoming an Intervenor

In addition to involvement in the EA scoping process, you may want to become an official party to the proceeding known as an ''intervenor''. Intervenors play a more formal role in the process. Among other things, intervenors have the right to receive copies of case-related Commission documents and filings by other intervenors. Likewise, each intervenor must provide 14 copies of its filings to the Secretary of the Commission and must send a copy of its filings to all other parties on the Commission's service list for this proceeding. If you want to become an intervenor you must file a motion to intervene according to Rule 214 of the Commission's Rules of Practice and Procedure (18 CFR 385.214) (see appendix 2). Only intervenors have the right to seek rehearing of the Commission's decision.

Affected landowners and parties with environmental concerns may be granted intervenor status upon showing good cause by stating that they have a clear and direct interest in this proceeding which would not be adequately represented by any other parties. You do not need intervenor status to have your environmental comments considered.

Additional information about the proposed project is available from Mr. Paul McKee of the Commission's Office of External Affairs at (202) 208–1088 or on the FERC website (www.ferc.fed.us) using the ''RIMS'' link to information in this docket number. Click on the ''RIMS'' link, select ''Docket#'' from the RIMS Menu, and follow the instructions. For assistance with access to RIMS, the RIMS helpline can be reached at (202) 208–2222.

Similarly, the ''CIPS'' link on the FERC Internet website provides access to the texts of formal documents issued by the Commission, such as orders, notices, and rulemakings. From the FERC Internet website, click on the ''CIPS'' link, select ''Docket #'' from the CIPS menu, and follow the instructions. For assistance with access to CIPS, the CIPS helpline can be reached at (202) 208–2474.

Linwood A. Watson, Jr.,

Acting Secretary.

[FR Doc. 00–8465 Filed 4–5–00; 8:45 am]

BILLING CODE 6717–01–M

DEPARTMENT OF ENERGY

Federal Energy Regulatory Commission

Notice of Non-Project Use of Project Lands

March 31, 2000.

Take notice that the following hydroelectric application has been filed with the Commission and is available for public inspection:

a. *Application Type:* Non-Project Use of Project Lands.

b. *Project No.:* 1494–197.

c. *Date Filed:* October 22, 1999; supplemented March 23, 2000.

d. *Applicant:* Grand River Dam Authority.

e. *Name of Project:* Pensacola Hydroelectric Project.

f. *Location:* The Pensacola Project is located on the Grand (Neosho) River in Craig, Delaware, Mayes, and Ottawa Counties, Oklahoma. This project does not occupy Federal or Tribal lands.

g. *Filed Pursuant to:* Federal Power Act, 16 U.S.C. 791(a)–825(r).

h. *Applicant Contact:* Mary E. Von Drehle, Grand River Dam Authority, P.O. Box 409, Vinita, OK 74301 (918) 256–5545.

i. *FERC Contact:* Any questions about this notice should be addressed to Steve Hocking at *steve.hockingferc.fed.us.* or telephone (202) 219–2656. The Commission cannot accept comments, recommendations, motions to intervene or protests sent by e-mail; these documents must be filed as described below.

j. *Deadline for filing comments, recommendations, motions to intervene and protests:* May 4, 2000.

All documents (original and eight copies) should be filed with: David P. Boergers, Secretary, Federal Energy

Regulatory Commission, 888 First Street, NE, Washington, DC 20426. Please include the project number (1494–197) on any documents filed with the Commission.

k. *Description of the Application:* Grand River Dam Authority (GRDA), licensee for the Pensacola Project, requests Commission approval to issue a permit to John W. Mayes to dredge about 33,357 cubic yards of sediment and install 9 docks with a total of 84 boat slips for owners of lots in Vintage on Grand Lake subdivision.

l. *Location of the application:* A copy of the application is available for inspection and reproduction at the Commission's Public Reference Room at 888 First Street NE, Room 2A, Washington, DC 20426, or by calling (202) 208–1371. The application may be viewed on the web at *http://www.ferc.fed.us/online/rims.htm.* Call (202) 208–2222 for assistance.

m. Individuals who want their name and address put on the Commission's mailing list for this project should so indicate by writing to the Secretary of the Commission.

Comments, Protests, or Motions to Intervene—Anyone may submit comments, a protest, or a motion to intervene in accordance with the requirements of Rules of Practice and Procedure, 18 CFR 385.210, 385.211, 385.214. In determining the appropriate action to take, the Commission will consider all protests or other comments filed, but only those who file a motion to intervene in accordance with the Commission's Rules may become a party the proceeding. Any comments, protests, or motions to intervene must be received on or before the specified comment date for the particular application.

Filing and Service of Responsive Documents—Any filings must bear in all capital letters the title ''COMMENTS,'' ''RECOMMENDATIONS FOR TERMS AND CONDITIONS,'' ''PROTEST,'' or ''MOTION TO INTERVENE,'' as applicable, and the Project Number of the particular application to which the filing refers. Any of the above-named documents must be filed by providing the original and the number of copies provided by the Commission's regulations to: The Secretary, Federal Energy Regulatory Commission, 888 First Street, NE, Washington, DC 20426. A copy of any motion to intervene must also be served upon each representative of the Applicant specified in the particular application.

Agency Comments—Federal, state, and local agencies are invited to file comments on the described application. A copy of the application may be obtained by agencies directly from the applicant. If an agency does not file comments within the time specified for filing comments, it will be presumed to have no comments. One copy of an agency's comments must also be sent to the Applicant's representatives.

Linwood A. Watson, Jr.,

Acting Secretary.

[FR Doc. 00–8470 Filed 4–5–00; 8:45 am]

BILLING CODE 6717–01–M

DEPARTMENT OF ENERGY

Federal Energy Regulatory Commission

Notice of Application for Amendment of License and Soliciting Comments, Motions To Intervene, and Protests

March 31, 2000.

Take notice that the following hydroelectric application has been filed with the Commission and is available for public inspection:

a. *Application Type:* Amendment of License.

b. *Project No.:* 2101–068.

c. *Date Filed:* March 6, 2000.

d. *Applicant:* Sacramento Municipal Utility District (SMUD).

e. *Name of Project:* Upper American River Hydroelectric Project (Camino Development).

f. *Location:* The Camino Development is located on the South Fork American River in El Dorado County, California.

g. *Filed Pursuant to:* Federal Power Act, 16 U.S.C. 791(a)–825(r).

h. *Applicant's Contact:* Lon Maier, 6201 S Street, Sacramento, CA, 95817, (916) 732–6566.

i. *FERC Contact:* Any questions on this notice should be addressed to Doan Pham at (202) 219–2851 or e-mail address *doan.pham@ferc.fed.us.*

j. *Deadline for filing comments, motions to intervene, or protests:* May 10, 2000.

All documents (original and eight copies) should be filed with: David P. Boergers, Secretary, Federal Energy Regulatory Commission, 888 First Street, NE, Washington, DC 20426.

Please include the Project Number (2101–068) on any comments, protests, or motions filed.

k. *Description of Amendment:* SMUD requests approval to construct at the Camino Powerhouse, a concrete deflection wall to protect the powerhouse from damage sustained from boulders and debris in the river during high flow events. The deflection wall, with a maximum height of 22 feet from bedrock, will extend about 96 feet from the powerhouse.

l. *Locations of the Application:* A copy of the application is available for inspection and reproduction at the Commission's Public Reference Room, located at 888 First Street NE, Room 2A, Washington, DC, 20426, or by calling (202) 208–1371. This filing may be viewed on http://www.ferc.fed.us/online/rims.htm (call (202) 208–2222 for assistance). A copy is also available for inspection and reproduction at the addresses in item h above.

m. Individuals desiring to be included on the Commission's mailing list should so indicate by writing to the Secretary of the Commission.

Comments, Protests, or Motions to Intervene—Anyone may submit comments, a protest, or a motion to intervene in accordance with the requirements of Rules of Practice and Procedure, 18 CFR 385.210, .211, .214. In determining the appropriate action to take, the Commission will consider all protests or other comments filed, but only those who file a motion to intervene in accordance with the Commission's Rules may become a party to the proceeding. Any comments, protests, or motions to intervene must be received on or before the specified comment date for the particular application.

Filing and Service of Responsive Documents—Any filings must bear in all capital letters the title ''COMMENTS'', ''RECOMMENDATIONS FOR TERMS AND CONDITIONS'', ''PROTEST'', OR ''MOTION TO INTERVENE'', as applicable, and the Project Number of the particular application to which the filing refers. Any of the above-named documents must be filed by providing the original and the number of copies provided by the Commission's regulations to: The Secretary, Federal Energy Regulatory Commission, 888 First Street, NE, Washington, DC 20426. A copy of any motion to intervene must also be served upon each representative of the Applicant specified in the particular application.

Agency Comments—Federal, state, and local agencies are invited to file comments on the described application. A copy of the application may be obtained by agencies directly from the Applicant. If an agency does not file comments within the time specified for filing comments, it will be presumed to have no comments. One copy of an

agency's comments must also be sent to the Applicant's representatives.

Linwood A. Watson, Jr.,

Acting Secretary.

[FR Doc. 00–8471 Filed 4–5–00; 8:45 am]

BILLING CODE 6717–01–M

DEPARTMENT OF ENERGY

Federal Energy Regulatory Commission

Notice of Application Accepted for Filing and Soliciting Motions To Intervene, Protests, Comments, Recommendations, and Terms and Conditions

March 31, 2000.

a. *Type of Application:* Conduit Exemption.

b. *Project No.:* 11836–000.

c. *Date filed:* February 23, 2000.

d. *Applicant:* Mark R. Hutchings.

e. *Name of Project:* Pinesdale Project.

f. *Location:* At the Sheafman Creek Canyon, in Ravalli County, Montana. Project has no Federal lands.

g. *Filed Pursuant to:* Federal Power Act 16 USC 791(a)–825(r).

h. *Applicant Contact:* Mark R. Hutchings, BMB Enterprises, 268 South Moss Hill Road, Bountiful, Utah 84010–1322, (801) 292–5014.

i. *FERC Contact:* Robert W. Bell (202) 219–2806.

j. *Status of Environmental Analysis:* This application is ready for environmental analysis at this time—see attached paragraph D–4.

k. *Deadline for filing motions to intervene, protests and comments:* June 10, 2000.

All documents (original and eight copies) should be filed with: David P. Boergers, Secretary, Federal Energy Regulatory Commission, 888 First Street, NE, Washington, DC 20426.

The Commission's Rules of Practice and Procedure require all interveners filing documents with the Commission to serve a copy of that document on each person in the official service list for the project. Further, if an intervener files comments or documents with the Commission relating to the merits of an issue that may affect the responsibilities of a particular resource agency, they must also serve a copy of the document on that resource agency.

l. *Description of Project:* The proposed project consists of an existing powerhouse on the 12–inch–diameter steel Pinesdale pipeline with one new generating unit having an installed capacity of 150–kW. The applicant would sell all the power generated to Ravalli County Electric Cooperative. The average annual generation would be 705, 782 kWh.

n. *Available Locations of Application:* A copy of the application is available for inspection and reproduction at the Commission's Public Reference and Files Maintenance Branch, located at 888 First Street, NE., Room 2A, Washington, DC 20426, or by calling (202) 208–1371. This filing maybe viewed on *http://www.ferc.fed.us/online/rims.htm* (call (202) 208–2222 for assistance). A copy is also available for inspection and reproduction at the address shown in item h above.

All documents (original and eight copies should be filed with: David P. Boergers, secretary, Federal Energy Regulatory Commission, Mail Code: DHAC, PJ–12, 888 First Street NE, Washington DC 20426.

Please include the Project Number 11836–000 on any comments, protests, or motions filed.

Development Application—Any qualified applicant desiring to file a competing application must submit to the Commission, on or before the specified deadline date for the particular application, a competing development application, or a notice of intent to file such an application. Submission of a timely notice of intent allows an interested person to file the competing development application no later than 120 days after the specified deadline date for the particular application. Applications for preliminary permits will not be accepted in response to this notice.

Notice of intent—A notice of intent must specify the exact name, business address, and telephone number of the prospective applicant, and must include an unequivocal statement of intent to submit, if such an application may be filed, either a preliminary permit application or a development application (specify which type of application). A notice of intent must be served on the applicant(s) named in this public notice.

Protests or Motions to Intervene—Anyone may submit a protest or a motion to interevene in accordance with the requirements of Rules of Practice and Procedure, 18 CFR 385.210, 385.211, and 385.214. In determining the appropriate action to take, the Commission will consider all protests filed, but only those who file a motion to intervene in accordance with the Commission's Rules may become a party to the proceeding. Any protests or motions to intervene must be received on or before the specified deadline date for the particular application.

Filing and Service of Responsive Documents—The application is ready for environmental analysis at this time, and the Commission is requesting comments, reply comments, recommendations, terms and conditions, and prescriptions.

The Commission directs, pursuant to Section 4.34(b) of the Regulations (see Order No. 533 issued May 8, 1991, 56 FR 23108, May 20, 1991) that all comments, recommendations, terms and conditions and prescriptions concerning the application be filed with the Commission within 60 days from the issuance date of this notice. All reply comments must be filed with the Commission within 105 days from the date of this notice.

Anyone may obtain an extension of time for these deadlines from the Commission only upon a showing of good cause or extraordinary circumstances in accordance with 18 CFR 385.2008.

All filings must (1) bear in all capital letters the title ''PROTEST'', ''MOTION TO INTERVENE'', ''NOTICE OF INTENT TO FILE COMPETING APPLICATION,'' ''COMPETING APPLICATION,'' ''COMMENTS,'' ''REPLY COMMENTS,'' ''RECOMMENDATIONS,'' ''TERMS AND CONDITIONS,'' or ''PRESCRIPTIONS;'' (2) set forth in the heading the name of the applicant and the project number of the application to which the filing responds; (3) furnish the name, address, and telephone number of the person protesting or intervening; and (4) otherwise comply with the requirements of 18 CFR 385.2001 through 385.2005. All comments, recommendations, terms and conditions or prescriptions must set forth their evidentiary basis and otherwise comply with the requirements of 18 CFR 4.34(b). Agencies may obtain copies of the application directly from the applicant. Any of these documents must be filed by providing the original and the number of copies required by the Commission's regulations to: The Secretary, Federal Energy Regulatory Commission, 888 First Street, NE, Washington, DC 20426. An additional copy must be sent to Director, Division of Project Review, Office of Hydropower Licensing, Federal Energy Regulatory Commission, at the above address. A copy of any protest or motion to intervene must be served upon each representative of the applicant specified in the particular application. A copy of all other filings in reference to this application must be accompanied by proof of service on all persons listed in the service list prepared by the Commission in this proceeding, in

accordance with 18 CFR 4.34(b) and 385.2010.

Linwood A. Watson, Jr.,

Acting Secretary.

[FR Doc. 00–8473 Filed 4–5–00; 8:45 am]

BILLING CODE 6717–01–M

DEPARTMENT OF ENERGY

Office of Hearings and Appeals

Implementation of Special Refund Procedures

AGENCY: Office of Hearings and Appeals, Department of Energy.

ACTION: Notice of implementation of special refund procedures.

SUMMARY: The Office of Hearings and Appeals (OHA) of the Department of Energy (DOE) announces the final procedures for disbursement of more than $12,000,000, including accrued interest, in alleged crude oil overcharges obtained by the DOE under the terms of Consent Orders and Remedial Orders entered into with ARGO Petroleum Corp. and 16 other firms, Case Nos. VEF–0031, *et al.* The OHA has tentatively determined that the funds obtained from these 17 firms plus accrued interest, will be distributed in accordance with the DOE's Modified Statement of Restitutionary Policy Concerning Crude Oil Overcharges.

FOR FURTHER INFORMATION CONTACT: Thomas L. Wieker, Deputy Director, Office of Hearings and Appeals, 1000 Independence Avenue, SW, Washington, DC 20585–0107, (202) 426–1527.

SUPPLEMENTARY INFORMATION: In accordance with 10 CFR 205.282(b), notice is hereby given of the issuance of the Final Decision and Order set out below. The Decision and Order sets forth the procedures that the DOE has formulated to distribute more than $12,000,000, including interest, obtained by the DOE under the terms of Consent Orders and Remedial Orders entered into with ARGO Petroleum Corp. and 16 other firms. The funds were paid towards the settlement of violations and alleged violations of the DOE price and allocation regulations involving the sale of crude oil during the period August 1973 through January 1981.

The OHA will distribute the Consent Order funds in the manner stated in an October 29, 1999 Proposed Decision and Order. The monies will be divided between the federal government, the states, and injured purchasers of refined petroleum products. Since the period for filing claims for crude oil overcharge refunds has closed, no new refund applications will be accepted for the funds involved in this decision and order.

Dated: March 28, 2000.

George B. Breznay,

Director, Office of Hearings and Appeals.

APPENDIX A

Name of firm	OHA case No.	Consent order tracking system No. (COTS)	Amount	
			Principal	With interest through 9/30/99
ARGO Petroleum Corp	VEF–0031	940C0089W	$60,835.18	$86,841.36
Don E. Pratt Oil Co	VEF–0036	740C01204W	235,000.00	394,878.05
Beta Energy Corp	VEF–0034	6C0X00260W	32,818.34	45,037.34
AWECO, Inc. & Hargis, Billy K	VEF–0032	6A0X00231W	665,908.68	968,874.23
B.M. Hester	VEF–0033	660C00647W	25,000.00	36,649.53
General Altantic Petrl & General Klotz	VEF–0038	650X00359W	107,790.21	123,262.93
Glen A. Martin	VEF–0039	610C000478W	13,583.80	18,560.48
Intercoastal Operating Co. & L.E. Lewis	VEF–0041	600C20082W	95,000.00	159,348.46
Kelly Trading Co & Reed, M.L	VEF–0043	650X00350W	182,000.00	265,665.83
Martin Exploration Co	VEF–0044	640C00406W	3,917.32	5,989.39
Pel-Star Energy	VEF–0047	6A0X00277W	30,263.70	51,178.22
Petro—Thermo	VEF–0048	6A0X00301W	42,772.32	75,698.67
Petroleum Mgmt., Inc	VEF–0049	422C00066W	71,319.67	117,570.09
Polaris Production Co	VEF–0050	670C00229W	71,726.16	109,151.96
Road Oil Sales	VEF–0051	N00S98090W	6,950.58	15,485.49
Tomlinson Petrl., Inc	VEF–0054	650X00318W	7,406,694.87	10,027,185.48
United Independent Oil Co. & Peter Hirshburg	VEF–0055	N00S90461W	75,000.00	159,621.07
Total			9,126,580.83	12,660,998.58

Decision and Order of the Department of Energy

Implementation of Special Refund Procedures

Name of Firm: ARGO Petroleum Corp., *et al.*
Date of Filing: October 19, 1999.
Case Number: VEF–0031, *et al.*

On October 29, 1999, the Office of Hearings and Appeals (OHA) of the Department of Energy (DOE)issued a Proposed Decision and Order (PDO) concerning a Petition for Implementation of Special Refund Procedures filed by the DOE's Office of General Counsel for Federal Litigation. The PDO is issued as Appendix B to the present determination.

In the PDO, we invited comments regarding a proposal to disburse $9,126,580.83 plus interest, received from 17 firms that sold crude oil during the period August 17, 1973 through January 1981. The names of the firms and the amounts received from each are set forth in Appendix A to this determination. The funds were remitted in order to settle actual or alleged violations of the DOE's mandatory petroleum price and allocation regulations. 10 CFR Parts 211 and 212. We allowed a 30-day period in which to provide comments regarding the manner in which these funds would be disbursed. The comment period is now closed. We received no comments regarding our proposal. We are therefore issuing final procedures for disbursing the funds.

The monies, including all additional interest that has accrued since the issuance of the October 29 PDO, will be disbursed as set forth in the appended PDO. As the PDO states, the funds will be disbursed as provided for in the DOE's Statement of Modified Restitutionary Policy in Crude Oil Cases. 51 Fed. Reg. 27899 (August 4, 1986) (the SMRP). Therefore, the funds will be divided as follows: 20 percent will be reserved for direct restitution to injured parties; the remaining 80 percent will be disbursed in equal shares to the states and the federal government for indirect restitution. As stated above, in this case, the total amount available for disbursement, not including interest, is $9,126,580.83. This fund shall be disbursed as follows: $1,825,316.16 plus 20 percent of all accrued interest as of the date of the funds transfer shall be deposited into the DOE interest-bearing account for crude oil overcharge

refund claimants; $3,650,632.33 plus 40 percent of all accrued interest as of the date of the funds transfer shall be deposited into the DOE interest bearing escrow account for the states; $3,650,632.33, plus 40 percent of all accrued interest as of the date of the funds transfer shall be deposited into the DOE interest bearing account for the federal government.

As we indicated in the PDO, the refund period for filing claims for these crude oil overcharge funds is closed. Therefore, no applications for refund for these funds may be filed. This final Decision and Order simply provides for the appropriate disposition of funds that have recently become available. It will affect only refund applications that have already been timely filed with the OHA. Accordingly, the Proposed Decision and Order, Appendix B to this determination, is hereby issued as a final Decision and Order of the Department of Energy.

It Is Therefore Ordered That:

(1) The Director of Special Accounts and Payroll, Office of Departmental Accounting and Financial Systems Development, Office of the Controller of the Department of Energy shall take all steps necessary to transfer the funds remitted by the 17 firms listed in Appendix A to this determination, plus accrued interest, pursuant to Paragraphs (2), (3), and (4) below.

(2) The Director of Special Accounts and Payroll shall transfer $3,650,632.33, plus 40 percent of all accrued interest on the funds referenced in Paragraph (1) above, into the subaccount denominated ''Crude Tracking—States,'' Number 999DOE003W.

(3) The Director of Special Accounts and Payroll shall transfer $3,650,632.33, plus 40 percent of all accrued interest on the funds referenced in Paragraph (1) above, into the subaccount denominated ''Crude Tracking—Federal,'' Number 999DOE002W.

(4) The Director of Special Accounts and Payroll shall transfer $1,825,316.16, plus 20 percent of all accrued interest on the funds referenced in Paragraph (1) above, into the subaccount denominated ''Crude Tracking—Claimants 4,'' Number 999DOE010Z.

(5) No Applications for Refund may be submitted in connection with this Decision and Order.

(6) This is a final Order of the Department of Energy.

Dated: March 28, 2000.

George B. Breznay,

Director, Office of Hearings and Appeals.

APPENDIX A

Name of firm	OHA case No.	Consent order tracking system No. (COTS)	Amount	
			Principal	With interest through 9/30/99
ARGO Petroleum Corp	VEF–0031	940C0089W	$60,835.18	$86,841.36
Don E. Pratt Oil Co	VEF–0036	740C01204W	235,000.00	394,878.05
Beta Energy Corp	VEF–0034	6C0X00260W	32,818.34	45,037.34
AWECO, Inc. & Hargis, Billy K	VEF–0032	6A0X00231W	665,908.68	968,874.23
B.M. Hester	VEF–0033	660C00646W	25,000.00	36,649.53
General Atlantic Petrl & General Klotz	VEF–0038	650X00359W	107,790.21	123,262.93
Glen A. Martin	VEF–0039	610C000478W	13,583.80	18,560.48
Intercoastal Operating Co. & L.E. Lewis	VEF–0041	600C20082W	95,000.00	159,348.46
Kelly Trading Co. & Reed, M.L	VEF–0043	650X00350W	182,000.00	265,665.83
Martin Exploration Co	VEF–0044	640C00406W	3,917.32	5,989.39
Pel-Star Energy	VEF–0047	6A0X00277W	30,263.70	51,178.22
Petro-Thermo	VEF–0048	6A0X00301W	42,772.32	75,698.67
Petroleum Mgmt., Inc	VEF–0049	422C00066W	71,319.67	117,570.09
Polaris Production Co	VEF–0050	670C00229W	71,726.16	109,151.96
Road Oil Sales	VEF–0051	N00S9809W	6,950.58	15,485.49
Tominson Petrl., Inc	VEF–0054	65X00318W	7,406,694.87	10,027,185.48
United Independent Oil Co. & Peter Hirshburg	VEF–0055	N00S90461W	75,000.00	159,621.07
Total			9,126,580.83	12,660,998.58

Appendix B

Proposed Decision and Order of the Department of Energy

Implementation of Special Refund Procedures

Name of Firm: ARGO Petroleum Corp., *et al.*

Date of Filing: October 19, 1999.

Case Number: VEF–0031, *et al.*

In accordance with the procedural regulation of the Department of Energy (DOE), a DOE enforcement official may file a request that the Office of Hearings and Appeals (OHA) formulate and implement special refund procedures. 10 CFR 205.281. These procedures are used to refund monies to those injured by actual or alleged violations of the DOE price regulations.

In this Decision and Order, we consider a Petition for Implementation of Special Refund Procedures filed by the DOE's Office of General Counsel for Federal Litigation (OGC) on October 19, 1999. The funds at issue in this case were obtained from 17 firms that sold crude oil during the period August 1973 through January 1981. These firms remitted moneys to the DOE to settle actual or alleged violations of the DOE's mandatory petroleum price and allocation regulations set forth at 10 CFR Parts 211 and 212. The sums submitted by each firm, including accrued interest are set forth in the Appendix to this Decision. The total amount remitted, including interest through September 30, 1999, is $12,660,998.58. This Decision and Order sets out the OHA's proposed procedures to distribute those funds.

The general guidelines which the OHA may use to formulate and implement a plan to distribute refunds are set forth in 10 CFR Part 205, Subpart V. The Subpart V process may be used in situations where the DOE cannot readily identify the persons who may have been injured as a result of actual or alleged violations of the regulations or ascertain the amount of the refund each person should receive. For a more detailed discussion of Subpart V and the authority of the OHA to fashion procedures to distribute refunds, *see Office of Enforcement,* 9 DOE ¶ 82,508 (1981), and *Office of Enforcement,* 8 DOE ¶ 82,597 (1981). We have considered the OGC's request to implement Subpart V procedures with respect to the monies received from the 17 firms named in the Appendix and have determined that such procedures are appropriate.

On July 28, 1986, the DOE issued a *Statement of Modified Restitutionary Policy in Crude Oil Cases,* 51 Fed. Reg. 27899 (August 4, 1986) (the SMRP). The SMRP, issued as a result of a court-approved Settlement Agreement In re: *The Department of Energy Stripper Well*

Exemption Litigation, M.D.L. No. 378 (D. Kan. 1986), reprinted in 6 Fed. Energy Guidelines ¶ 90,501 (The Stripper Well Agreement), provides that crude oil overcharge funds will be divided among the states, the federal government, and injured purchasers of refined petroleum products. Eighty percent of the funds, and any monies remaining after all valid claims are paid, are to be disbursed equally to the states and federal government for indirect restitution. Twenty percent of the funds will be used for direct restitution to claimants who were injured by actual or alleged crude oil violations.

The OHA has applied these procedures in numerous cases. *E.g., New York Petroleum Inc.,* 18 DOE ¶ 85,435 (1988); *Shell Oil Co.,* 17 DOE ¶ 85,204 (1988); *Ernest A. Allerkamp,* 17 DOE ¶ 85,079 (1988). The procedures have been approved by the United States District Court for the District of Kansas, as well as the Temporary Emergency Court of Appeals. We will not reiterate those procedures here. They are by now well known and, further, the period for filing refund claims for crude oil overcharge funds closed on June 30, 1995. 60 Fed. Reg. 19914–15 (April 21, 1995).

Accordingly, we propose to reserve the full twenty percent of the available alleged crude oil violation amounts, $2,532,199.72, for direct refunds to claimants, in order to ensure that sufficient funds will be available for refunds to injured parties. As stated above, no new applications for refund for those monies will be accepted, since the claims period has closed. The funds will be added to the general crude oil overcharge pool available for direct restitution.

Under the terms of the SMRP, we propose that the remaining eighty percent of the alleged crude oil violation amounts subject to this Decision, or $10,128,798.86, should be disbursed in equal shares to the states and federal government for indirect restitution. The share or ratio of the funds which each state will receive is contained in Exhibit H of the Stripper Well Agreement. When disbursed, these funds will be subject to the same limitations and reporting requirements as all other crude oil monies received by the states under the Stripper Well Agreement.

It Is Therefore Ordered That: The refund amounts remitted to the Department of Energy by the firms listed in the Appendix to this Decision and Order will be distributed in accordance with the foregoing Decisions.

APPENDIX

Name of firm	OHA case No.	Consent order tracking system No. (COTS)	Amount	
			Principal	With interest through 9/30/99
ARGO Petroleum Corp	VEF–0031	940C0089W	$60,835.18	$86,841.36
Don E. Pratt Oil Co	VEF–0036	740C01204W	235,000.00	394,878.05
Beta Energy Corp	VEF–0034	6C0X00260W	32,818.34	45,037.34
AWECO, Inc. & Hargis, Billy K	VEF–0032	6A0X00231W	665,908.68	968,874.23
B.M. Hester	VEF–0033	660C00647W	25,000.00	36,649.53
General Atlantic Petrl & General Klotz	VEF–0038	650X00359W	107,790.21	123,262.93
Glen A. Martin	VEF–0039	610C000478W	13,583.80	18,560.48
Intercoastal Operating Co. & L.E. Lewis	VEF–0041	600C20082W	95,000.00	159,348.46
Kelly Trading Co & Reed, M.L	VEF–0043	650X00350W	182,000.00	265,665.83
Martin Exploration Co	VEF–0044	640C00406W	3,917.00	5,989.39
Pel-Star Energy	VEF–0047	6A0X00277W	30,263.70	51,178.22
Petro-Thermo	VEF–0048	6A0X00301W	42,772.32	75,698.67
Petroleum Mgmt., Inc	VEF–0049	422C00066W	71,319.67	117,570.09
Polaris Production Co	VEF–0050	670C00229W	71,726.16	109,151.96
Road Oil Sales	VEF–0051	N00X98090W	6,950.58	15,485.49
Tomlinson Petrl., Inc	VEF–0054	650X00318W	7,406,694.87	10,027,185.48
United Independent Oil Co. & Peter Hirshburg	VEF–0055	N00S90461W	75,000.00	159,621.07
Total			9,126,580.83	12,660,998.58

[FR Doc. 00–8326 Filed 4–5–00; 8:45 am]
BILLING CODE 6450–01–M

ENVIRONMENTAL PROTECTION AGENCY

[FRL–6571–2]

Request for Nominations to the National Advisory Council for Environmental Policy and Technology (NACEPT)

AGENCY: Environmental Protection Agency (EPA).

ACTION: Notice of request for nominations.

SUMMARY: The Environmental Protection Agency (EPA) is inviting nominations to fill vacancies on its National Advisory Council for Environmental Policy and Technology (NACEPT). The Agency is seeking qualified senior level decision makers from diverse sectors throughout the U.S. to be considered for appointments. Nominations will be accepted until close of business April 28, 2000.

ADDRESSES: Submit nominations to: Mr. Gordon Schisler, Deputy Director, Office of Cooperative Environmental Management, U.S. Environmental Protection Agency, 1601-A, 1200 Pennsylvania Avenue, NW, Washington, DC 20460.

SUPPLEMENTARY INFORMATION: NACEPT is a federal advisory committee under the Federal Advisory Committee Act, PL 92463. NACEPT provides advice and recommendations to the Administrator and other EPA officials on a broad range of domestic and international environmental policy issues.

The Administrator of EPA has asked NACEPT to address several policy and regulatory components associated with Human Resource Development Planning, Information and Technology Planning and Strategic Planning.

NACEPT consists of a representative cross-section of EPA's partners and principle constituents who provide advice and recommendations on policy issues and serve as a sounding board for

new strategies that the Agency is developing.

Maintaining a balance and diversity of experience, knowledge, and judgement is an important consideration in the selection of members. Potential candidates should possess the following qualifications:

Occupy a senior position within their organization.

Broad experience outside of their current position.

Experience dealing with public policy issues.

Membership in broad-based networks.

Extensive experience in the environmental field.

Recognized expert in the subject matter to be addressed by NACEPT.

EPA is seeking nominees for representation from all sectors, especially, state, local and tribal agencies, industry, academia, environmental justice organizations, grassroots organizations, and NGOs.

Nominations for membership must include a resume and short biography describing the educational and professional qualifications of the nominee and the nominee's current business address and daytime telephone number.

FOR FURTHER INFORMATION CONTACT: Ms. Gwendolyn Whitt, Designated Federal Officer for NACEPT, U.S. Environmental Protection Agency, 1601–A, 1200 Pennsylvania Avenue, NW, Washington, DC 20460; telephone (202) 564–5982.

Dated: March 29, 2000.

Gwendolyn Whitt,

Designated Federal Officer.

[FR Doc. 00–8401 Filed 4–5–00; 8:45 am]

BILLING CODE 6560–50–U

ENVIRONMENTAL PROTECTION AGENCY

[OPPTS–00291; FRL–6552–4]

National Advisory Committee for Acute Exposure Guideline Levels for Hazardous Substances; Notice of Public Meeting

AGENCY: Environmental Protection Agency (EPA).

ACTION: Notice.

SUMMARY: A meeting of the National Advisory Committee for Acute Exposure Guideline Levels for Hazardous Substances (NAC/AEGL Committee) will be held on April 26–28, 2000, in Piscataway, NJ. The NAC/AEGL Committee has now instituted the development of AEGLs for 10-minute exposure periods for all chemicals scheduled for AEGL development. This 10-minute exposure period will be in addition to the current exposure periods of 30-minutes, 1 hour, 4 hours, and 8 hours. The new 10-minute numbers will be developed for all chemicals previously addressed by the NAC/AEGL Committee, as well as all future chemicals to come before the NAC/AEGL Committee. At this meeting, the NAC/AEGL Committee will address, as time permits, the various aspects of the acute toxicity and the development of AEGLs for all exposure periods for the following chemicals: Agent HD (sulfur mustard); bromine; cis- and trans-1,2-dichloroethylene; HCFC-141b; HFC-134a; hydrogen cyanide; hydrogen fluoride; hydrogen sulfide; Otto fuel II, uranium hexafluoride; phosphine; 1,1,1-trichloroethane. There will also be a discussion of and the development of 10-minute AEGL values as time permits for the following chemicals for which the other exposure periods have already been developed at the proposed level: Allyl amine; carbon tetrachloride; chlorine trifluoride; crotonaldehyde; cyclohexylamine; dimethyldichlorosilane; epichlorohydrin; ethylenediamine; ethylene oxide; ethyleneimine; hydrogen chloride; iron pentacarbonyl; methyl isocyanate; methyl mercaptan; methyltrichlorosilane; nickel carbonyl; nitric acid; peracetic acid; phosgene; phosphorus oxychloride; phosphorus trichloride; piperidine; propyleneimine; toluene; and toluene diisocyanate.

DATES: A meeting of the NAC/AEGL Committee will be held from 10 a.m. to 5 p.m. on April 26, 2000; from 8:30 a.m. to 5:30 p.m. on April 27, 2000; and from 8:30 a.m. to 12:30 p.m. on April 28, 2000.

ADDRESSES: The meeting will be held at the Environmental and Occupational Health Sciences Institute (EOHSI), 170 Frelinghuysen Rd., Piscataway, NJ. See Unit II. for visitor registration procedures, parking information, and travel directions.

FOR FURTHER INFORMATION CONTACT: *For general information contact:* Barbara Cunningham, Director, Office of Program Management and Evaluation, Office of Pollution Prevention and Toxics (7401), Ariel Rios Bldg., 1200 Pennsylvania Ave., NW., Washington, DC 20460; telephone number: (202) 554–1404; e-mail address: TSCA-Hotline@epa.gov

For technical information contact: Paul S. Tobin, Designated Federal Officer (DFO), Office of Prevention, Pesticides and Toxic Substances (7406), Ariel Rios Bldg., 1200 Pennsylvania Ave., NW., Washington, DC 20460; telephone number: (202) 260–1736; e-mail address: tobin.paul@epa.gov.

SUPPLEMENTARY INFORMATION:

I. General Information

A. Does this Action Apply to Me?

This action is directed to the public in general. This action may be of particular interest to anyone who may be affected if the AEGL values are adopted by government agencies for emergency planning, prevention, or response programs, such as EPA's Risk Management Program under the Clean Air Act and Amendments Section 112r. It is possible that other Federal agencies besides EPA, as well as State agencies and private organizations, may adopt the AEGL values for their programs. As such, the Agency has not attempted to describe all the specific entities that may be affected by this action. If you have any questions regarding the applicability of this action to a particular entity, consult the DFO listed under ''FOR FURTHER INFORMATION CONTACT.''

B. How Can I Get Additional Information, Including Copies of this Document or Other Related Documents?

1. *Electronically*. You may obtain electronic copies of this document, and certain other related documents that might be available electronically, from the EPA Internet Home Page at http://www.epa.gov/. To access this document, on the Home Page select ''Laws and Regulations'' and then look up the entry for this document under the ''**Federal Register**—Environmental Documents.'' You can also go directly to the **Federal Register** listings at http://www.epa.gov/fedrgstr/.

2. *In person*. The Agency has established an official record for this action under docket control number OPPTS–00291. The official record consists of the documents specifically referenced in this action, any public comments received during an applicable comment period, and other information related to this action, including any information claimed as Confidential Business Information (CBI). This official record includes the documents that are physically located in the docket, as well as the documents that are referenced in those documents. The public version of the official record does not include any information claimed as CBI. The public version of the official record, which includes printed, paper versions of any electronic comments submitted during an applicable comment period, is available for inspection in the TSCA Nonconfidential Information Center, North East Mall Rm. B–607, Waterside

Mall, 401 M St., SW., Washington, DC. The Center is open from noon to 4 p.m., Monday through Friday, excluding legal holidays. The telephone number of the Center is (202) 260–7099.

II. Meeting Procedures

A. Presentations

For additional information on the scheduled meeting, the agenda of the NAC/AEGL Committee, or the submission of information on chemicals to be discussed at the meeting, contact the DFO listed under ''FOR FURTHER INFORMATION CONTACT.''

The meeting of the NAC/AEGL Committee will be open to the public. Oral presentations or statements by interested parties will be limited to 10 minutes. Interested parties are encouraged to contact the DFO to schedule presentations before the NAC/AEGL Committee. Since seating for outside observers may be limited, those wishing to attend the meeting as observers are also encouraged to contact the DFO at the earliest possible date to ensure adequate seating arrangements. Inquiries regarding oral presentations and the submission of written statements or chemical-specific information should be directed to the DFO.

B. Parking and Travel Directions

1. *Parking*. Visitors should contact the DFO to have their names added to the entry list. Visitors arriving by automobile must park in the designated parking spots for the meeting in Parking Lot #54. Parking Lot #54 is between Titsworth and Taylor Rds.

2. *Travel directions*. (Approximate mileage to EOHSI from): Exit #9, Route #287 (2.5 miles); Exit #9, New Jersey (NJ) Turnpike (6 miles); New York City (40 miles); New Brunswick Train Station (3.5 mile); Newark Airport (27 miles).

a. *From Route #287*—i. *Traveling south*. Exit at sign for ''River Rd./Bound Brook/Highland Park'' (Exit 9). Turn right off the exit ramp onto River Rd. (Route #18 South). At the fourth traffic light (approximately 2.5 miles from Route #287) turn left onto Hoes Lane. Continue down Hoes Lane to the ''Y'' in the road and the golf course will be on your right-hand side.

At the ''Y'' in the road bear right onto Frelinghuysen Rd. and EOHSI will be a short distance down the road on your left. You will need to pass EOHSI and continue to Allison Rd. Make a left onto Allison Rd., at the STOP sign make a right onto Bevier Rd. and continue to Taylor Rd. (one block) and make a left. Parking Lot #54 is on the left. There will be a security guard present; mention the meeting and you will be allowed to park. You then must walk back to EOHSI the way you drove. Once at EOHSI follow the posted signs to Conference Room C.

ii. *Traveling north*. Exit at the sign for ''Bound Brook—Highland Park'' (Exit #9). Turn left off the exit ramp onto River Rd. (514 Spur). At the fourth traffic light (approximately 2.8 miles from Route #287) turn left onto Hoes Lane. Continue from ''Y'' in the road by following the directions in Unit II.B.2.a.i.

b. *From the NJ Turnpike*. Take Exit #9—New Brunswick. Take Route #18 North—New Brunswick. Approximately 4 miles from the NJ Turnpike Route #18 will cross the Raritan River. Keep to the left of the bridge. Turn left at the traffic light at the end of the bridge onto River Rd. (Route #18 North). At the second traffic light turn right onto Hoes Lane. Continue from ''Y'' in the road by following the directions in Unit II.B.2.a.i.

c. *From Route #1 traveling south*. As you near the New Brunswick area, follow signs for Route #18 North—New Brunswick, bearing right at the Exxon Station. Continue from Route #18 North by following the directions in Unit II.B.2.b.

d. *From Garden State Parkway traveling south*. Take Exit #130 to Route #1 South. Continue from Route #1 South by following the directions in Unit II.B.2.c.

e. *From New Brunswick Railroad Station*. New Jersey (NJ) Transit trains make regular stops in New Brunswick. If you are traveling from Washington, DC or Baltimore, MD, you will have to change from AMTRAK to NJ Transit at either Philadelphia, PA or Trenton, NJ. Taxis are located outside the train station.

f. *From airports*—i. Newark International Airport is approximately 35 miles from EOHSI. Taxis are located outside the baggage claim area. Dispatchers will give you the fare to Piscataway, NJ before you enter the cab.

ii. La Guardia Airport is 50 miles from Piscataway, NJ. EOHSI is located at 170 Frelinghuysen Rd. on the Busch Campus of Rutgers University.

iii. JFK Airport is 54 miles from Piscataway, NJ. EOHSI is located at 170 Frelinghuysen Rd. on the Busch Campus of Rutgers University.

III. Future Meetings

A future meeting of the NAC/AEGL Committee is tentatively scheduled for summer 2000. The final date and location of this meeting and the chemicals to be discussed will be published in a future **Federal Register** notice.

List of Subjects

Environmental protection, Chemicals, Hazardous substances, Health and safety.

Dated: March 30, 2000.

William H. Sanders III,

Director, Office of Pollution Prevention and Toxics.

[FR Doc. 00–8542 Filed 4–5–00; 8:45 am]

BILLING CODE 6560–50–F

ENVIRONMENTAL PROTECTION AGENCY

[FRL–6573–2]

Public Meeting To Discuss Infrastructure Issues Associated With Alternative-Fueled Vehicles

AGENCY: Environmental Protection Agency (EPA).

ACTION: Notice of public meeting.

SUMMARY: The Environmental Protection Agency (EPA) intends to hold a public workshop to discuss issues associated with alternative fueled vehicles (AFV's) (*i.e.* vehicles powered by fuels other than gasoline). The purpose of this workshop is to facilitate an exchange of information focusing on issues relating to infrastructure development and creating a sustainable market for AFV's. Members of the public are invited to attend as observers as well as to participate in the discussion.

DATES: The EPA Infrastructure Workshop will be held in San Diego, California on May 10, 2000, from 12:30 to 4:30 p.m. (The date and location were selected to coordinate with the Department of Energy's National Clean Cities Conference which begins May 7, in San Diego).

ADDRESSES: Questions about the workshop should be addressed to: Barry Garelick (202–564–9028; *garelick.barry@epa.gov*) 401 M Street, SW. (6406J), Washington, DC. (20460) or Sally Newstead (734–214–4474; *newstead.sally@epa.gov*) 2000 Traverwood Dr., Ann Arbor, MI (48105). The workshop will be held at the US Grant Hotel, 326 Broadway, San Diego, CA, 92101, 800–334–6957 or 619–232–3121. The workshop registration form can be down loaded from the alternative fuels website: *http://www.epa.gov/otaq/consumer/fuels/altfuels/altfuels.htm.*

FOR FURTHER INFORMATION CONTACT: Barry Garelick (202) 546–9028 or Sally Newstead (734) 214–4474.

SUPPLEMENTARY INFORMATION: As this Administration has long recognized, one

of the keys to moving forward environmentally is moving forward technologically. Progress towards sustainable reductions in emissions from the mobile source sector is inextricably linked to technological advancement. Motor vehicles are significant contributors to ground-level ozone, the principal harmful ingredient in smog. They also emit other pollutants, including particulate matter and air toxics, and motor vehicle emissions contribute to public health problems such as asthma and other respiratory problems.

The rise in vehicle sales and vehicle miles traveled each year has consistently led to increases in the aggregate emissions from the mobile source sector despite progress in reducing emissions from gasoline-powered, convention motor vehicles. This places increasing importance on technological developments, including vehicles powered by fuels other than gasoline. There are a number of types of alternative fuel vehicles (AFV's) in production and under development. In the United States, manufacturers are already selling various types of AFV's including vehicles powered by electricity, compresses natural gas, methanol and ethanol. The last year has also seen dramatic developments in hybrid-electric vehicle and fuel cell technology.

EPA has noted that the development of a sustainable market for AFV's is a key component of any plan to achieve the air quality gains that are possible from the use of AFV's; developing the infrastructure necessary for AFV's is an important part in developing that sustainable market. For example, drivers may be reluctant to purchase electric vehicles if they have concerns about the availability of recharging stations. EPA believes that the solutions to infrastructure development needs can be found by a variety of stakeholders working together to identify useful steps that might best be taken by working in partnership with each other.

At this workshop, the Agency's intent is to gather other Administration officials (both environmental and purchasing agent), auto and utility industry representatives, environmentalists, and other interested parties. In addition to providing a opportunity to briefly discuss the barriers that limit development, it will provide a forum to begin the process of defining ''next steps'' that public and private sector parties can exercise in overcoming the barriers to developing an alternative fuels infrastructure. Issues to be explored include: (1) What sectors of vehicles should be targeted for an alternative fuels infrastructure (*i.e.*, heavy-duty vs light-duty;) (2) what will be the effect of Tier 2 standards on alternative fuel vehicles; (3) what market incentives and legislative actions that have worked well and are ''transferable''. Additionally, EPA is interested in learning what programs have been successful in promoting the use of alternative fuel vehicles.

This workshop is intended to be the type of workshop that the northeastern states and the auto industry had tentatively agreed to in the ATV Agreement in the National LEV MOU that was never finalized.[1] EPA believed that the ATV agreement would have been a productive way of creating a sustainable market for AFV's through cooperative working relationships. The Agency intends that the workshop will draw on the expertise of the northeastern states and other areas (such as California). EPA also welcomes the participation by other states. Anyone with suggestions for this workshop should contact Barry Garelick at 202/546–9028.

Dated: March 30, 2000.

Margo T. Oge,

Office Director for Office of Transportation and Air Quality, Office of Air and Radiation.

[FR Doc. 00–8540 Filed 4–5–00; 8:45 am]

BILLING CODE 6560–50–P

[1] In the negotiations between the northeastern states and the auto industry on EPA's National Low Emission Vehicle (NLEV) program, the states and the auto industry had tentatively agreed to a process to facilitate discussion on the creation of a sustainable market for advanced technology vehicles (ATV Agreement). (This tentative ATV Agreement was to be included in a Memorandum of Understanding (MOU) that was to form the basis for the NLEV program, but the ATV Agreement was not intended to be included in the NLEV regulations. However, the parties ended discussions and decided not to finalize the MOU, which would have contained the ATV agreement.)

ENVIRONMENTAL PROTECTION AGENCY

[FRL–6572–1]

Meeting of the Mobile Sources Technical Review Subcommittee

AGENCY: Environmental Protection Agency (EPA).

ACTION: Notice of meeting.

SUMMARY: Pursuant to the Federal Advisory Committee Act, Public Act, Public Law 92–463, notice is hereby given that the Mobile Sources Technical Review Subcommittee of the Clean Air Act Advisory Committee will meet in a regular quarterly session. This is an open meeting. The theme will be ''Nonroad Vehicles and Engines.'' The meeting may include presentations on the impact and significance of such sources on air quality and public health from several perspectives, *e.g.*, EPA, CARB and the regulated industry, an update on EPA's computer model and a discussion of regulatory initiatives. The preliminary agenda for this meeting and draft minutes from the previous one are available from the Subcommittee's website at: http://transaq.ce.gatech.edu/epatac

DATES: Wednesday, April 12, 2000 from 9 a.m. to 3:15 p.m. Registration begins at 8:30 am.

ADDRESSES: The meeting will be held at the Radisson Hotel Old Town Alexandria, 901 N. Fairfax, Alexandria, Virginia, 22314. The facility is located less than two miles south of National Airport. The telephone number is (703) 683–6000. Space for observers is available on a first-come, first-served basis.

FOR FURTHER INFORMATION CONTACT: For technical information:, Mr. John T. White, Alternate Designated Federal Officer, Certification and Compliance Division, U.S. EPA 2000 Traverwood Drive, Ann Arbor, MI 48105, Ph: 734/214–4353, FAX: 734/214–4821 email: white.johnt@epa.gov

For logistical and administrative information: Ms. Mary F. Green, FACA Management Officer, U.S. EPA, 2000 Traverwood Drive, Ann Arbor, Michigan, Ph: 734/214–4411, Fax: 734/214–4053, email: green.mary@epa.gov

For background on the Subcommittee: http://transaq.ce.gatech.edu/epatac. Individuals or organizations wishing to provide comments to the Subcommittee should submit them to Mr. White at the address above by April 7. The Mobile Sources Technical Review Subcommittee expects that public statements presented at its meetings will not be repetitive of previously submitted oral or written statements.

SUPPLEMENTARY INFORMATION: During this meeting, the Subcommittee may also hear progress reports from some of its workgroups (including review and approval of the recommendations of the On-Board Diagnostics Workgroup prior to their submission to the CAAAC) as well as updates and announcements on activities of general interest, *e.g.*, status of relevant EPA regulations, schedule for the release of MOBILE6, and an update on the reorganization of the Office of Transportation and Air Quality.

Dated: March 30, 2000.

Donald Zinger,

Acting Director, Office of Transportation and Air Quality.

[FR Doc. 00–8408 Filed 4–5–00; 8:45 am]

BILLING CODE 6560–50–U

ENVIRONMENTAL PROTECTION AGENCY

[FRL—6571–6]

Science Advisory Board; Notification of Public Advisory Committee Meetings

Pursuant to the Federal Advisory Committee Act, Public Law 92–463, notice is hereby given that three committees of the US EPA Science Advisory Board (SAB) will meet on the dates and times noted below. All times noted are Eastern Daylight Time. All meetings are open to the public, however, seating is limited and available on a first come basis. *Important Notice:* Documents that are the subject of SAB reviews are normally available from the originating EPA office and are not available from the SAB Office—information concerning availability of documents from the relevant Program Office is included below.

1. Ecological Processes and Effects Committee (EPEC)—April 25–26, 2000

The Ecological Processes and Effects Committee (EPEC) will meet on April 25-26, 2000 in Conference Room 5530 Ariel Rios Building (North Entrance—adjacent to the entrance to the Federal Triangle Metro Stop), 1200 Pennsylvania Avenue, NW, Washington, DC. The meeting will be open to the public, with seating on a first-come, first-served basis. The meeting will convene at 9:00 am on April 25 and at 8:30 am on April 26, and will end no later than 5:30 pm on each day.

The purpose of the meeting is for the Committee to conduct a self-initiated project to offer advice to the Agency on the content and design of an ecological report card. The Committee will discuss a proposed conceptual framework for reporting on ecological condition, and will apply the framework to several Agency examples or programs. As background to the project, the Committee was briefed in July 1998 by various Agency offices on efforts to develop performance measures and environmental indicators. The output of the Committee deliberations is expected to be a report to the Agency describing a proposed framework, with illustrative case examples relevant to EPA programs.

For Further Information—The proposed meeting agenda is available from Ms. Mary Winston, Management Assistant, Committee Operations Staff, Science Advisory Board (1400A), U.S. EPA, 1200 Pennsylvania Avenue, NW, Washington DC 20460, telephone (202) 564–4538, fax (202) 501–0582, or via e-mail at: winston.mary@epa.gov.

Any member of the public wishing to submit comments must contact Ms. Stephanie Sanzone, Designated Federal Officer (DFO) for the Committee, *in writing* no later than 4:00 pm on April 17, 2000 at: EPA Science Advisory Board (1400A), 1200 Pennsylvania Avenue, NW, Washington DC 20460; fax (202) 501–0582; or e-mail at: *sanzone.stephanie@epa.gov.* The request should identify the name of the individual who will make the presentation and an outline of the issues to be addressed. Questions concerning the meeting can be directed to Ms. Sanzone at (202) 564–4561.

2. Radiation Advisory Committee (RAC)—April 25–27, 2000

The Radiation Advisory Committee (RAC) will meet on Tuesday, April 25 through Thursday, April 27, 2000. The meeting will convene at 9:00 a.m. each day in Conference Room 6530 Ariel Rios Building (North Entrance—adjacent to the entrance to the Federal Triangle Metro Stop), 1200 Pennsylvania Avenue, NW, Washington, DC and adjourn no later than 5:30 pm the first and second day, and no later than 3:30 pm the third day.

At this meeting, the RAC will: (a) Conduct an advisory on the GENII—Version 2 computer model, (b) conduct an advisory on an approach for uranium mining Technologically Enhanced Naturally Occurring Radioactive Material (TENORM), and (c) conduct a consultation on scenarios for radiological exposure to sewage sludge.

During this meeting, the RAC intends to draft its advisory on the GENII-Version 2 computer model under development by the Office of Radiation and Indoor Air (ORIA) for conducting radiation exposure and risk assessments. This model uses the FRAMES modular system. The charge questions to be answered include, but are not limited to the following:

(a) Is FRAMES a reasonable platform for supporting an integrated system of tools for meeting the diverse environmental modeling needs of ORIA?

(b) Are the GENII v.2 terrestrial transport (exposure and intake modules) and air dispersion models adequate? and

(c) Are the examples and documentation provided with the software adequate and helpful? What advice does the RAC have on ways to tabulate and present the output?

During the meeting the RAC also intends to draft its advisory on Technologically Enhanced Naturally Occurring Radioactive Material (TENORM). The Agency is asking the RAC's advice on the adequacy of EPA's proposed approach for characterizing TENORM, and whether EPA is appropriately applying this approach in the technical report for uranium mining TENORM which is under development. The charge questions to be answered include, but are not limited to the following:

(a) Is EPA's general approach for characterizing TENORM in a given technical report adequate;

(b) Has the general approach been appropriately applied for uranium mining TENORM?; and

(c) Is the risk assessment approach, as outlined, adequate for evaluating risks from uranium mining TENORM? In particular, have the key exposure scenarios been considered?

For Further Information—Members of the public wishing further information concerning the meeting, such as copies of the proposed meeting agenda, or who wish to submit written comments should contact Mrs. Diana L. Pozun at (202) 564–4544; fax (202) 501–0582, or via e-mail at: *pozun.diana@epa.gov.* Members of the public who wish to make a brief oral presentation to the Committee must contact (by letter or by fax—see contact information below) no later than 12 noon Daylight Time, Wednesday, April 19, 2000 in order to be included on the Agenda. Public comments will be normally limited to ten minutes per speaker or organization. The request should identify the name of the individual making the presentation, the organization (if any) they will represent, any requirements for audio visual equipment (*e.g.,* overhead projector, 35mm projector, chalkboard, easel, etc), and at least 35 copies of an outline of the issues to be addressed or of the presentation itself. For further information, contact Ms. Melanie Medina-Metzger, Designated Federal Officer for the Radiation Advisory Committee, Science Advisory Board (1400A), U.S. EPA, 1200 Pennsylvania Avenue, NW, Washington, DC 20460, phone (202) 564–5987; fax (202) 501–0582; or via e-mail at: medina-metzger.melanie@epa.gov.

For questions pertaining to the GENII v.2 model, please contact Dr. Anthony Wolbarst (6608J), ORIA, U.S. Environmental Protection Agency, 1200

Pennsylvania Avenue, NW, Washington, DC 20460, tel. (202) 564–9392; fax (202) 565–2042; or e-mail at: *wolbarst.anthony@epa.gov.* For questions pertaining to the advisory on uranium mining TENORM, please contact Mr. Loren W. Setlow (6608J), ORIA, U.S. Environmental Protection Agency, 1200 Pennsylvania Avenue, NW, Washington, DC 20460, tel. (202) 564–9445; fax (202) 565–2065; or e-mail at: setlow.loren@epa.gov. For questions pertaining to the consultation on sewage sludge scenarios or on any other topics discussed between the SAB's RAC and the ORIA staff, please contact Dr. Mary E. Clark, (6601J), ORIA, U.S. Environmental Protection Agency, 1200 Pennsylvania Avenue, NW, Washington, DC 20460, tel. (202) 564–9348; fax (202) 565–2043; or e-mail at: *clark.marye@epa.gov.*

3. Executive Committee (EC)—May 1, 2000

The Executive Committee (EC) of the Science Advisory Board (SAB) will conduct a public teleconference meeting on Monday, May 1, 2000 between the hours of 1:00 and 3:00 pm Eastern Daylight Time. The meeting will be coordinated through a conference call connection in Room 6013, USEPA, Ariel Rios Building (North Entrance—adjacent to the entrance to the Federal Triangle Metro Stop), 1200 Pennsylvania Avenue, NW, Washington, DC. The public is encouraged to attend the meeting in the conference room noted above, however, the public may also attend through a telephonic link, *if lines are available.* Additional instructions about how to participate in the conference call can be obtained by calling Ms. Priscilla Tillery-Gadson no later than one week prior to the meeting (by April 24, 2000) at (202) 564–4533, or via e-mail at *tillery.priscilla@epa.gov.*

Purpose of the Meeting—The EC will take action on available reports from its Committees and Subcommittees, which may include the following:

(a) Drinking Water Committee ''Comments on EPA's Draft Proposal on a Long-Term 1 Enhanced Surface Water Treatment and Filter Backwash Rule''

(b) Residual Risk Subcommittee ''Advisory on the USEPA's Analysis of the Residual Risks of Lead Smelters''

(c) Environmental Engineering Committee ''Commentary on Waste Re-Use''

Availability of Review Materials—All reports available for action by the EC will be posted on the SAB Website (http://www.epa.gov/sab) at least one week prior to the meeting.

For Further Information—Any member of the public wishing further information concerning this meeting or wishing to submit brief oral comments must contact Dr. Donald Barnes, Designated Federal Officer, Science Advisory Board (1400A), U.S. Environmental Protection Agency, 1200 Pennsylvania Avenue, NW, Washington, DC 20460; telephone (202) 564–4533; fax (202) 501–0582; or via e-mail at *barnes.don@epa.gov.* Requests for oral comments must be *in writing* (e-mail, fax or mail) and received by Dr. Barnes no later than noon Daylight Time on April 24, 2000.

Providing Oral or Written Comments at SAB Meetings

It is the policy of the Science Advisory Board to accept written public comments of any length, and to accommodate oral public comments whenever possible. The Science Advisory Board expects that public statements presented at its meetings will not be repetitive of previously submitted oral or written statements. *Oral Comments:* In general, each individual or group requesting an oral presentation at a face-to-face meeting will be limited to a total time of ten minutes. For teleconference meetings, opportunities for oral comment will usually be limited to no more than three minutes per speaker and no more than fifteen minutes total. Deadlines for getting on the public speaker list for a meeting are given above. Speakers should bring at least 35 copies of their comments and presentation slides for distribution to the reviewers and public at the meeting. *Written Comments:* Although the SAB accepts written comments until the date of the meeting (unless otherwise stated), written comments should be received in the SAB Staff Office at least one week prior to the meeting date so that the comments may be made available to the committee for their consideration. Comments should be supplied to the appropriate DFO at the address/contact information noted above in the following formats: one hard copy with original signature, and one electronic copy via e-mail (acceptable file format: WordPerfect, Word, or Rich Text files (in IBM–PC/Windows 95/98 format). Those providing written comments and who attend the meeting are also asked to bring 25 copies of their comments for public distribution.

General Information—Additional information concerning the Science Advisory Board, its structure, function, and composition, may be found on the SAB Website (*http://www.epa.gov/sab*) and in The FY1999 Annual Report of the Staff Director which is available from the SAB Publications Staff at (202) 564–4533 or via fax at (202) 501–0256. Committee rosters, draft Agendas and meeting calendars are also located on our website.

Meeting Access—Individuals requiring special accommodation at this meeting, including wheelchair access to the conference room, should contact the DFO at least five business days prior to the meeting so that appropriate arrangements can be made.

Dated: March 29, 2000.

Donald G. Barnes,

Staff Director, Science Advisory Board.

[FR Doc. 00–8403 Filed 4–5–00; 8:45 am]

BILLING CODE 6560–50–U

ENVIRONMENTAL PROTECTION AGENCY

[FRL–6572–2]

Proposed CERCLA Administrative Cost Recovery Settlement for the C&J Disposal Superfund Site, Town of Eaton, Madison County, NY

AGENCY: Environmental Protection Agency.

ACTION: Notice; request for public comment.

SUMMARY: In accordance with section 122(i) of the Comprehensive Environmental Response, Compensation, and Liability Act of 1980, as amended (''CERCLA''), 42 U.S.C. 9622(i), notice is hereby given of a proposed administrative settlement, entered into pursuant to section 122(h) of CERCLA, 42 U.S.C. 9622(h), for recovery of past response costs concerning the C & J Disposal Superfund Site (''Site'') located in the Town of Eaton, Madison County, New York, with the following settling parties: Estate of Charles Picariello, Geneso (a/k/a James) Picariello, C & J Leasing Company and The Birge Company. The settlement requires the settling parties to pay $90,000.00 to the EPA Hazardous Substance Superfund in reimbursement of past response costs incurred with respect to the Site. The settlement includes a covenant not to sue the settling party pursuant to Section 107(a) of CERCLA, 42 U.S.C. 9607(a), for all costs incurred at or in connection with the Site by the United States through the effective date of the settlement agreement. For thirty (30) days following the date of publication of this document, the U.S. Environmental Protection Agency (''EPA'' or ''Agency'') will receive written comments relating to the settlement. The Agency will consider all comments received and may modify or withdraw its consent to

the settlement if comments received disclose facts or considerations that indicate that the proposed settlement is inappropriate, improper or inadequate. The Agency's response to any comments received will be available for public inspection at the EPA, Region II, 290 Broadway, New York, New York 10007–1866.

DATES: Comments must be submitted on or before May 8, 2000.

ADDRESSES: The proposed settlement is available for public inspection at the EPA, 290 Broadway, New York, New York 10007–1866. A copy of the proposed settlement may be obtained from Lee A. Speilmann, Assistant Regional Counsel, New York/Caribbean Superfund Branch, Office of Regional Counsel, 17th Floor, 290 Broadway, New York, New York 10007–1866. Comments should reference the C & J Disposal Superfund Site located in Eaton, New York, Docket No. CERCLA–02–99–2005, and should be addressed to Lee A. Spielmann, Assistant Regional Counsel, Office of Regional Counsel, U.S. Environmental Protection Agency, 290 Broadway, 17th floor, New York, New York 10007–1866.

FOR FURTHER INFORMATION CONTACT: Lee A. Spielmann, Assistant Regional Counsel, New York/Caribbean Superfund Branch, Office of Regional Counsel, U.S. Environmental Protection Agency, 17th Floor, 290 Broadway, New York, New York 10007–1866. Telephone: 212–637–3222.

Dated: March 27, 2000.

William J. Muszynski,

Regional Administrator, Region 2.

[FR Doc. 00–8532 Filed 4–5–00; 8:45 am]

BILLING CODE 6560–50–M

ENVIRONMENTAL PROTECTION AGENCY

[OPPTS–211044A; FRL–6496–6]

TSCA Section 21 Petition; Response to Citizens' Petition

AGENCY: Environmental Protection Agency (EPA).

ACTION: Notice.

SUMMARY: On December 27, 1999, EPA received a petition under section 21 of the Toxic Substances Control Act (TSCA) from People for the Ethical Treatment of Animals (PETA) on its own behalf and on behalf of four other organizations. The petition requests that EPA initiate TSCA rulemaking proceedings with respect to all chemicals included on the HPV (High Production Volume chemical) Challenge Program list as updated through the date of initiation of the requested proceedings. Specifically, the petition requests that EPA issue a TSCA section 8(a) Preliminary Assessment Information Reporting (PAIR) rule and a Health and Safety Data Reporting rule under TSCA section 8(d). For the reasons set forth in this notice, EPA has denied the petition to initiate rulemaking.

FOR FURTHER INFORMATION CONTACT: *For general information contact:* Barbara Cunningham, Director, Office of Program Management and Evaluation, Office of Pollution Prevention and Toxics (7401), Environmental Protection Agency, Ariel Rios Bldg., 1200 Pennsylvania Ave., NW., Washington, DC 20460; telephone number: (202) 554–1404; e-mail address: TSCA-Hotline@epa.gov.

For technical information contact: Frank D. Kover, Chemical Control Division (7405), Office of Pollution Prevention and Toxics, Environmental Protection Agency, Ariel Rios Bldg., 1200 Pennsylvania Ave., NW., Washington, DC 20460; telephone number: (202) 260–8130; e-mail address: ccd.citb@epa.gov.

SUPPLEMENTARY INFORMATION:

I. General Information

A. Does this Action Apply to Me?

This action is directed to the public in general. This action may, however, be of particular interest to U.S. chemical manufacturers (defined by statute to include importers) and processors. Because other entities may also be interested, the Agency has not attempted to describe all the specific entities that may be affected by this action. If you have any questions regarding the applicability of this action to a particular entity, consult the technical person listed under ''FOR FURTHER INFORMATION CONTACT.''

B. How Can I Get Additional Information, Including Copies of this Document or Other Related Documents?

1. *Electronically.* You may obtain electronic copies of this document, and certain other related documents that might be available electronically, from the EPA Internet Home Page at http://www.epa.gov/. To access this document, on the Home Page select ''Laws and Regulations'' and then look up the entry for this document under ''**Federal Register**—Environmental Documents.'' You can also go directly to the **Federal Register** listings at http://www.epa.gov/fedrgstr/. A copy of the petition and its supplement are available on EPA's homepage at http://www.epa.gov/chemrtk/sc21main.htm.

2. *In person.* The Agency has established an official record for this action under docket control number OPPTS–211044A. The official record consists of the documents specifically referenced in this action, any public comments received during an applicable comment period, and other information related to this action, including any information claimed as Confidential Business Information (CBI). This official record includes the documents that are physically located in the docket, as well as the documents that are referenced in those documents. The public version of the official record does not include any information claimed as CBI. The public version of the official record, which includes printed, paper versions of any electronic comments submitted during an applicable comment period, is available for inspection in the TSCA Nonconfidential Information Center, North East Mall Rm. B–607, Waterside Mall, 401 M St., SW., Washington, DC. The Center is open from noon to 4 p.m., Monday through Friday, excluding legal holidays. The telephone number for the Center is (202) 260–7099.

II. Background

A. What is a TSCA Section 21 Petition?

Section 21 of TSCA allows citizens to petition EPA to initiate a proceeding for the issuance, amendment, or repeal of a rule under TSCA sections 4, 6, or 8 or an order under TSCA sections 5(e) or 6(b)(2). A section 21 petition must set forth facts which the petitioner believes establish the need for the action requested. EPA is required to grant or deny the petition within 90 days of its receipt. If EPA grants the petition, the Agency must promptly commence an appropriate proceeding. If EPA denies the petition, the Agency must publish its reasons for the denial in the **Federal Register**. Within 60 days of denial or no action, petitioners may commence a civil action in a U.S. District Court to compel initiation of the requested rulemaking. When reviewing a petition for a new rule, as in this case, the court must provide an opportunity for *de novo* review of the petition. Pursuant to TSCA section 21(b)(4)(B)(ii), ''if the petitioner demonstrates to the satisfaction of the court by a preponderance of evidence that ... there is a reasonable basis to conclude that the issuance of such [TSCA section 8 rules] is necessary to protect health or the environment against an unreasonable risk of injury to health or the environment'' the court can order EPA to initiate the requested action.

B. What Action is Requested Under This TSCA Section 21 Petition?

On December 27, 1999, EPA received a TSCA section 21 petition from PETA on its own behalf and on behalf of the Physicians Committee for Responsible Medicine (PCRM), the Doris Day Animal League (DDAL), the International Marine Mammal Project of Earth Island Institute, and the National Anti-Vivisection Society (NAVS). The petitioners supplemented their original petition with additional references in a letter, dated January 19, 2000. The petition and its supplement are in the docket and are also available at http://www.epa.gov/chemrtk/sc21main.htm.

The petition asks EPA to initiate rulemaking proceedings with respect to all chemicals included in the HPV Challenge Program as updated through the date of initiation of the requested proceedings for the issuance of :

1. A TSCA section 8(a) PAIR rule (40 CFR part 712).

2. A Health and Safety Data Reporting rule under TSCA section 8(d) (40 CFR part 716).

The petitioners further petition that ''[s]uch rule[s] should neither be limited to participants in the Challenge Program nor exclude substances or mixtures as to which a participant has enrolled in the Program.'' While the petitioners recognize that companies are obligated under TSCA section 8(e) to report to the Agency information suggesting that a chemical poses a substantial risk to health or the environment, they are asking the Agency to initiate the requested rulemakings in order to obtain essentially exculpatory information from companies that might ''exonerate'' a chemical so that additional testing would not be needed.

This request is based in part upon assertions that regulations requiring the submission of existing hazard test data provide a better approach for implementing the HPV Challenge Program and associated TSCA section 4 HPV test rule(s) than the approach currently utilized, namely, the voluntary submission of relevant existing screening-level hazard test data in connection with sponsorship of chemicals under the HPV Challenge Program or as comments on proposed HPV rule(s) under TSCA section 4. The HPV Challenge Program and associated test rule(s) are part of a broader Agency program called the ''Chemical Right-to-Know Initiative.'' See http://www.epa.gov/chemrtk/ for a description of the Chemical Right-to-Know Initiative, including the HPV Challenge Program).

III. Disposition of Petition

EPA agrees with the underlying general premise of the petition, i.e., that relevant extant hazard data on the HPV Challenge Program chemicals, both ''positive'' data that indicate an effect and ''negative'' data that do not indicate an effect, should be considered by the Agency and made publicly available before any screening-level hazard testing (animal or non-animal) under the HPV Challenge Program or associated test rule(s) is conducted. However, EPA does not believe that it is required to grant the petition under the relevant standard set forth in TSCA section 21(b)(4)(B)(ii), namely that ''there is a reasonable basis to conclude that the issuance of such a rule or order is necessary to protect health or the environment against an unreasonable risk of injury to health or the environment.'' The petition does not argue that the requested rules are necessary to protect against an unreasonable risk to health or the environment, but rather asserts that the TSCA sections 8(a) PAIR and 8(d) rules provide a more efficient and effective approach to obtaining existing screening-level hazard data on HPV Challenge Program chemicals. Regardless of the validity of this assertion, it would not compel the Agency to take the requested action under TSCA section 21.

Moreover, as a policy matter, EPA does not believe that the petitioner's approach is more efficient and effective than the approach already being pursued by the Agency under the HPV Challenge Program and associated test rule(s). It should be recognized that the presence of a chemical on the HPV Challenge Chemical List is based upon production and/or importation volume for chemicals reported under the 1990 Inventory Update Rule (IUR), see 40 CFR part 710 for the current IUR regulations, and does not imply that any additional testing or re-testing is needed. Following the guidance provided by EPA, a comprehensive search for and review of existing toxicity studies is occurring and will occur for each of the chemicals in the HPV Challenge Program and any other chemicals listed under associated HPV test rules (see EPA guidance documents on searching for chemical information and assessing adequacy of existing data at http://www.epa.gov/chemrtk/guidocs.htm). The collection of these data is already a fundamental part of both the HPV Challenge Program and associated test rule(s). EPA firmly believes that all stakeholders in the HPV Challenge Program share the goal of avoiding unnecessary testing, in particular the participants who are and will be gathering and making publicly available extant test data and only developing data where screening level data are needed. Further, considering the significant costs and resource burdens involved in animal testing EPA perceives no motivation on the part of program participants or others for re-testing where adequate data already exist.

Finally, EPA disagrees with petitioners' opinion that rules under TSCA sections 8(a) PAIR and 8(d) are necessary to fulfill the objectives of the HPV Challenge Program. The Agency bases its position on this matter on the following considerations:

A. The HPV Challenge Program Maximizes the Use of Existing Data

The concerns expressed by the petitioners regarding animal testing have been and continue to be recognized and carefully considered by EPA. Recognition of those concerns is reflected in the Agency's letter of October 14, 1999 (see http://www.epa.gov/chemrtk/ceoltr2.htm) to HPV Challenge Program participants. Specifically, the October 14 letter clearly already addresses the petitioners' concerns for maximizing the use of existing data. The second listed principle in the October 14 letter states that ''Participants shall maximize the use of existing and scientifically adequate data to minimize further testing.'' The letter also indicates that EPA is firmly committed to reducing and eliminating the use of animals during any HPV chemical testing that must be conducted. EPA works domestically within the framework of the Interagency Coordinating Committee for the Validation of Alternative Methods (ICCVAM) and internationally with the Organization for Economic Cooperation and Development (OECD) to ensure the scientific acceptability of alternative test methods for regulatory as well as international data sharing purposes.

The tenth principle listed in the October 14 letter states that ''Companies shall allow 120 days between the posting of test plans and the implementation of testing plans.'' Anyone (including companies not participating in the HPV Challenge Program as well as any other person) having relevant test data is encouraged to submit them during the 120-day review period following posting of test plans and ''robust'' (i.e., detailed) summaries of scientifically adequate extant data on the Internet. This approach, which has evolved through

interactions with stakeholders, expands the potential respondent community well beyond the domestic manufacturers (including importers) and processors who would be the only ones subject to any TSCA section 8(a) PAIR or 8(d) reporting requirements. As related in comments by an HPV Challenge Program participant ''Domestic and foreign participants in voluntary programs have agreed to include all relevant unpublished and published data in publicly available 'robust summaries.' Indeed, it is expected that more data will be available through the 'robust summaries' which will include collaborative efforts with foreign producers, than through a Section 8 rule.'' (Ref. 1)

Further, EPA's implementation of the HPV Challenge Program has involved a proactive approach to increase by collaboration participants. EPA has sent letters to apparent duplicate sponsors notifying them of other participants' commitments and encouraging them to form consortia or initiate other data sharing efforts thus potentially avoiding duplicative testing by creating further opportunity to maximize use of existing data. The Agency has established an automatic e-mail notification feature on its ChemRTK website to update HPV Challenge Program information in real time for participants, as well as the public-at-large, thus taking further steps to avoid duplicative testing when ''new'' information becomes available. EPA's approach also broadens the scope to an international level, considering that many consortia and companies participating in the HPV Challenge Program are coordinating their data collection efforts on a global basis and are obtaining studies from companies and other sources throughout the world. EPA agrees with the Environmental Defense statement in their comments (Ref. 2) that ''Even assuming *arguendo* that any appreciable quantity of unpublished exculpatory information actually exists there is every reason to believe that such information will be made available in the voluntary [HPV Challenge] program.'' EPA also agrees with HPV participant statements that they ''. . . will not initiate new testing without thoroughly evaluating the need for such testing based on review of published and unpublished data. . . . In this highly competitive market, companies cannot afford to waste limited resources in conducting unwarranted or unnecessary testing; it is too costly.'' (Ref. 1)

B. Submissions Under the Requested Regulations Would Substantially Duplicate Data that HPV Challenge Program Participants Already have an Incentive to Provide

EPA believes the requested TSCA sections 8(a) PAIR and 8(d) regulatory actions are not necessary in order to obtain relevant existing hazard test data for chemicals included in the HPV Challenge Program because these data will be submitted (to the extent they exist) by participants and others under the HPV Challenge Program and by respondents to any associated TSCA section 4 rule(s). EPA believes that for the chemicals sponsored under the HPV Challenge Program, the data obtained via the requested TSCA sections 8(a) PAIR and 8(d) regulatory actions would substantially duplicate the extant data that program participants have already committed themselves to provide voluntarily under the HPV Challenge Program (where such data exist), and thus these actions would not supplement the program in a meaningful way. EPA also is guided by TSCA section 8(a)(2) which states that ''To the extent feasible, the Administrator [EPA] shall not require . . . any reporting which is unnecessary or duplicative.'' As a further safeguard to avoid unnecessary testing, EPA encourages anyone (including companies not participating in the HPV Challenge Program as well as any other person) having relevant ''positive'' or ''negative'' hazard test data to submit such data during the 120-day review period for test plans as specified in the EPA letter of October 14, 1999.

A fundamental component of the HPV Challenge Program from its inception has been the principle that extant ''positive'' or ''negative'' test data should be submitted in order to satisfy specified program data needs and thereby obviate the need for certain testing under the program. This principle has been clearly stated from the initiation of the program (see http://www.epa.gov/chemrtk). Further, EPA developed detailed guidance for program participants to use when searching for existing hazard test data (see http://www.epa.gov/chemrtk/srchguid.htm). HPV Challenge Program participants have formally committed to prepare and make available for public inspection test plans that will include extant hazard test data in the form of ''robust'' (i.e. detailed) summaries before any needed new testing is initiated (see http://www.epa.gov/chemrtk). The content of these summaries has been accepted and adopted by the International Organization for Economic Cooperation and Development (OECD) for its Screening Information Data Set (SIDS) Program (for a description of the OECD HPV SIDS Program see http://www.oecd.org/ehs/HPV.htm).

HPV Challenge Program participants and other entities that would be subject to the associated TSCA section 4 test rule(s) have a strong incentive to provide the needed data voluntarily (if such data exist), and in particular where such data support a conclusion that some or all of the proposed testing is not necessary. Such responses have occurred with past TSCA section 4 test rules. The petitioners present no reason to support a presumption that chemical producers would not respond similarly in this case. By providing these extant hazard test data voluntarily, companies recognize that they will save themselves both money and time (see, e.g., Refs. 1, 3, 4).

EPA intends to consider including HPV chemicals that remain unsponsored in one or more TSCA section 4 test rules. Comments relating to the use of TSCA section 8 information gathering rules have been raised previously in association with developing TSCA section 4 test rules. The Agency previously responded ''. . . that these sections of TSCA have served as useful tools in the gathering of production, release, health effects, and safety information for many previous test rule candidates. . . . However, the use of the rulemaking authorities under TSCA section 8 for information gathering purposes is not required prior to conducting rulemaking pursuant to TSCA section 4. . . and conventional rulemaking would not have produced section 8(a) and (d) data on a timely basis. Furthermore, any available studies could have been submitted to EPA in response to the proposed section 4 rule'' published in the **Federal Register** of June 15, 1988 (53 FR 22300, 22304). Thus, based on its past experience in implementing TSCA section 4 rules, EPA believes that potentially regulated persons will have a strong incentive during any proposed HPV rule comment period to submit any existing data, of which the Agency may not be aware, that are relevant to the specified test rule endpoints. In so doing, these persons may demonstrate to EPA that proposed testing on a particular endpoint for a chemical is not needed, and EPA may eliminate such testing from the rule.

C. The Requested Regulations Would be a Less Effective and Efficient Means to Gather Extant Screening-level Hazard Data on HPV Chemicals than the HPV Challenge Program, which is Similar to the Internationally Accepted OECD SIDS Program

Over the past several years, EPA and the regulated community have expressed a general preference for voluntary approaches, where feasible, in data gathering under TSCA (as opposed to regulatory approaches, such as the regulations requested by this petition). The voluntary HPV Challenge Program represents one of the most successful voluntary programs to collect chemical toxicity and fate data ever developed by EPA in cooperation with industry and others. To date, the HPV Challenge Program has resulted in commitments by 437 companies, acting individually or through 155 consortia, to provide basic toxicity and fate information on 2080 HPV industrial chemicals, either by submitting extant data in the form of ''robust'' summaries, or by agreeing to conduct testing where extant data are not available. The success of the HPV Challenge Program is due to the benefits that accrue under voluntary programs that would not be available under regulatory approaches. These benefits include but are not limited to: Less resource intensive, less adversarial, needed information will be submitted sooner and will be available to the public sooner, and stakeholders are provided more effective interactive input than a similar program developed solely via regulatory means.

EPA believes that the success of the HPV Challenge Program could be undermined by the promulgation of the requested TSCA sections 8(a) PAIR and 8(d) rules, which, as described in Unit III.B. would largely duplicate data that companies have already committed to provide voluntarily under the program, and which could also delay the program significantly due to the time needed to promulgate the regulations (potentially years), permit an industry response, and allow EPA to review the information. For example, if a TSCA section 8(d) rule was promulgated for all HPV Challenge Program chemicals, the rule would require the submission of complete copies of all unpublished health and safety studies for program chemicals, rather than ''robust'' summaries of existing studies as required in the HPV Challenge Program. Given the scope of the program, the standardized format for ''robust'' summaries is a much more useful format for access and review by EPA and others, including the public-at-large for purposes of the program. By contrast, with a TSCA section 8(d) rule, the Agency would have to manage the information, complete a full review of the studies, and extract the ''robust'' summary type information on its own at substantial taxpayer cost. In addition, the data will be more quickly and easily, accessible, searchable and useable under the HPV Challenge Program because they will be submitted electronically in a standardized format, whereas they would be submitted primarily in hard copy in an unstandardized format under the requested regulation.

A regulatory approach to data collection could further delay the HPV Challenge Program information collection and review because a TSCA section 8(d) rule would require the submission of existing health and safety studies beyond those that would be useful in eliminating data needs from the HPV Challenge Program. For example, with respect to the requested TSCA section 8(d) rule, studies of mixtures that contain a substance included in the rule would generally have to be reported (40 CFR 716.10(a)(2)), and the rule would result in duplicative submissions if several manufacturers submit copies of the same study. Yet these additional studies would also need to be reviewed by the Agency even though they would not have the potential to affect the program. As a result of these and other difficulties, EPA agrees with the Chemical Manufacturers Association's (CMA's) comment that ''the requested actions would undermine industry's ability to complete the work already underway in the HPV Challenge Program'' (Ref. 3).

EPA's experience in implementing the OECD HPV SIDS Program in the United States has indicated that past efforts to bring forward extant hazard test data have been successful. Similar to the HPV Challenge Program, companies sponsoring SIDS chemicals frequently form consortia or collaborative panels and thus gain access to studies that may be held by other companies in other countries. Neither EPA nor the petitioners have identified any instance in the OECD HPV SIDS Program where proposed testing, subsequently performed, was later found to be duplicative of existing adequate test data.

Likewise, the International Council of Chemical Associations (ICCA) has demonstrated the willingness of industry to provide existing test data in order to satisfy screening-level data needs. This organization, which is also implementing a program that is similar to the HPV Challenge Program, will make existing data held by international companies available for public use (Ref. 5).

EPA believes that the HPV Challenge Program must be given an opportunity to work before regulatory requirements are imposed. This belief is shared by the HPV Challenge Program participants, some of whom have stated that ''From a time, cost and animal use perspective, the HPV Challenge Program represents the most efficient means yet devised to ensure the evaluation of existing chemical substances, and it must go forward in parallel with other similar international programs'' (Ref. 3). EPA fully anticipates that the HPV Challenge Program will result in the submission of relevant extant hazard test data on the chemicals included in the program.

The HPV Challenge Program is similar in many ways to the voluntary OECD HPV SIDS Program. The OECD HPV SIDS Program is widely acknowledged to be a successful voluntary program that is internationally supported by 29 countries, including the United States. It is considered by those countries to be fully adequate for purposes of an initial assessment of chemical hazards. Further, EPA believes that pursuing development of TSCA sections 8(a) PAIR and 8(d) rules would require reporting of little relevant information beyond that obtained under the HPV Challenge Program as it is now structured. Compelling the submission of entire studies under a section 8(d) rule would place on EPA the burden of reviewing the studies, compiling summaries and making the summaries available to the public. Such an approach could potentially take months or years to accomplish, impose substantial costs on EPA with little likely benefit accruing to the HPV Challenge Program while unnecessarily delaying the program's goal of making screening-level hazard data on HPV chemicals publicly available. EPA also believes that there should be no further unnecessary delay collecting data under the HPV Challenge Program and making the data publicly available, and that it is in the public interest to proceed expeditiously with the HPV Challenge Program.

For the foregoing reasons, EPA is denying the petitioners' request. Although the Agency has decided to deny the petition, EPA recognizes that it may in the future have a legitimate need for information that can be obtained via TSCA section 8(a) PAIR and/or TSCA section 8(d) rules, for example, e.g., in order to support the development of future test rules for chemicals for which the Agency cannot base a finding under TSCA section 4(a)

on currently available hazard or exposure-related information.

IV. Comments Received

EPA received many comments in response to the **Federal Register** notice announcing EPA's receipt of this TSCA section 21 petition. EPA considered all comments received by February 23, 2000, in determining the proper response to the petitioners' requests. The majority of the comments were from individuals, most of whom identified themselves as members of one or more of the petitioning organizations. These comments urged EPA to grant the petition, but, generally did not provide additional support for the requested action beyond the rationales expressed in the petition itself. The United States Humane Society (Ref. 6) did present some additional reasons to support granting the petition. These comments which pertain primarily to the perceived limitations of the voluntary submission of extant data and the need for EPA to collect positive as well as negative extant data prior to the conduct of testing under the HPV Challenge Program are addressed throughout Unit III. (Ref. 6).

In addition, CMA, the Chemical Specialties Manufacturers Association (CSMA), the Soap and Detergent Association (SDA), the American Petroleum Institute (API), the Great Lakes Chemical Corporation (GLCC), the Silicones Environmental, Health and Safety Council (SEHSC), the Synthetic Organic Chemicals Manufacturers Association (SOCMA), Elf Atochem(ATO) , and Environmental Defense all urged EPA to deny the petition in its entirety. These comments generally express the view that the ''Framework'' and design of the HPV Challenge Program will fulfill the need to make existing hazard test data available. CMA, CSMA, SDA, API, GLCC, SEHSC, SOCMA, ATO, and Environmental Defense presented a number of arguments in support of denying the petition.

All of the comments received by EPA on the petition are located in the official record, as described in Unit I.B.2.

V. References

1. Comments of Elf Atochem North America, Inc. February 2, 2000.

2. Comments of Environmental Defense. February 3, 2000.

3. Comments of the Chemical Manufacturers Association. February 2, 2000.

4. Comments of the Chemical Specialties Manufacturers Association. February 3, 2000.

5. International Council of Chemical Associations. Description of High Production Volume (HPV) Chemicals Initiative. http://www.icca-chem.org/hpv/. 2000.

List of Subjects

Environmental protection.

Dated: March 30, 2000.

Susan H. Wayland,

Acting Assistant Administrator, Office of Prevention, Pesticides and Toxic Substances.

[FR Doc. 00–8543 Filed 4–5–00; 8:45 am]

BILLING CODE 6560–50–F

ENVIRONMENTAL PROTECTION AGENCY

[AZ023–NOA; FRL–6573–3]

Adequacy Status of the Maricopa County, Arizona Submitted PM–10 Attainment Plan for Transportation Conformity Purposes

AGENCY: Environmental Protection Agency (EPA).

ACTION: Notice of adequacy determination.

SUMMARY: In this document, EPA is notifying the public that we have found that submitted Maricopa County (Phoenix, Arizona) serious area particulate matter (PM–10) attainment plan is adequate for transportation conformity purposes. As a result of our finding, the Maricopa Association of Governments and the Federal Highway Administration must use the PM–10 motor vehicle emissions budget from the submitted plan for future conformity determinations.

DATES: This determination is effective April 21, 2000.

FOR FURTHER INFORMATION CONTACT: The finding is available at EPA's conformity website: http://www.epa.gov/oms/traq, (once there, click on the ''Conformity'' button, then look for ''Adequacy Review of SIP Submissions for Conformity''). You may also contact Karina O'Connor, U.S. EPA, Region IX, Air Division (AIR–2), 75 Hawthorne Street, San Francisco, CA 94105; (415) 744–1247 or oconnor.karina@epa.gov.

SUPPLEMENTARY INFORMATION:

Background

This notice announces our finding that the *Revised MAG 1999 Serious Area Particulate Plan for PM–10 for the Maricopa County Nonattainment Area* (February 2000), submitted by the Arizona on February 16,2000, is adequate for transportation conformity purposes. EPA Region IX made this finding in a letter to the Arizona Department of Environmental Quality and the Maricopa Association of Governments on March 29, 2000. We are also announcing this finding on our conformity website: http://www.epa.gov/oms/transp/conform/pastsips.htm.

Transportation conformity is required by section 176(c) of the Clean Air Act. Our conformity rule requires that transportation plans, programs, and projects conform to state air quality implementation plans (SIPs) and establishes the criteria and procedures for determining whether or not they do. Conformity to a SIP means that transportation activities will not produce new air quality violations, worsen existing violations, or delay timely attainment of the national ambient air quality standards.

The criteria by which we determine whether a SIP's motor vehicle emission budgets are adequate for conformity purposes are outlined in 40 CFR 93.118(e)(4). One of these criterion is that the plan provide for attainment of the relevant ambient air quality standard by the applicable Clean Air Act attainment date. We have preliminarily determined that the Maricopa County PM–10 plan does provide for attainment of the PM–10 standards and therefore, can be found adequate.

This adequacy finding is separate from and does not affect our February 25, 2000 finding that the plan is complete under section 110(k)(1) of the Clean Air Act.

We have described our process for determining the adequacy of submitted SIP budgets in guidance (May 14, 1999 memo titled ''Conformity Guidance on Implementation of March 2, 1999 Conformity Court Decision''). We followed this guidance in making our inadequacy determination on the Maricopa County PM–10 plan.

Authority: 42 U.S.C. 7401–7671q.

Dated: March 30, 2000.

Laura Yoshii,

Acting Regional Administrator, Region IX.

[FR Doc. 00–8539 Filed 4–5–00; 8:45 am]

BILLING CODE 6560–50–P

ENVIRONMENTAL PROTECTION AGENCY

[OPPTS–59370; FRL–6552–3]

Approval of Test Marketing Exemption for a Certain New Chemical (With Comment Period)

AGENCY: Environmental Protection Agency (EPA).

ACTION: Notice.

SUMMARY: This notice announces EPA's approval of an application for test marketing exemption (TME) under section 5(h)(1) of the Toxic Substances Control Act (TSCA) and 40 CFR 720.38. EPA has designated this application as TME–00–2. The test marketing conditions are described in the TME application and in this notice.

DATES: Approval of this TME is effective on March 31, 2000. Written comments will be received until April 21, 2000.

ADDRESSES: Comments may be submitted by mail, electronically, or in person. Please follow the detailed instructions for each method as provided in Unit III of the ''SUPPLEMENTARY INFORMATION.'' To ensure proper receipt by EPA, it is imperative that you identify the docket control number ''[OPPTS–59370]'', and the TME number ''[TME 00–2]'' in the subject line on the first page of your response.

FOR FURTHER INFORMATION CONTACT: For general information contact: Barbara Cunningham, Director, Office of Program Management, and Evaluation, Office of Pollution Prevention and Toxics (7401), Environmental Protection Agency, Ariel Rios Bldg., 1200 Pennsylvania Ave., NW., Washington, DC 20460; telephone number: 202-554-1404; and e-mail address: TSCA-Hotline@epa.gov.

For technical information contact: Adella Watson, New Chemicals Notice Management Branch, Chemical Control Division (7405), Office of Pollution Prevention and Toxics, Environmental Protection Agency, Ariel Rios Bldg., 1200 Pennsylvania Ave., NW., Washington, DC 20460; telephone number: (202) 260–3752; and e-mail address: watson.adella@epa.gov.

SUPPLEMENTARY INFORMATION:

I. Does this Action Apply to Me?

This action is directed in particular to the chemical manufacturer and/or importer who submitted the TME to EPA. This action may, however, be of interest to the public in general. Since other entities may also be interested, the Agency has not attempted to describe all the specific entities that may be affected by this action. If you have any questions regarding the applicability of this action to a particular entity, consult the person listed in the ''FOR FURTHER INFORMATION CONTACT'' section.

II. How Can I Get Additional Information, Including Copies of this Document or Other Related Documents?

A. *Electronically*. You may obtain electronic copies of this document, and certain other related documents that might be available electronically, from the EPA Internet Home Page at http://www.epa.gov/. To access this document, on the Home Page select ''Laws and Regulations'' and then look up the entry for this document under the ''**Federal Register**--Environmental Documents.'' You can also go directly to the **Federal Register** listings at http://www.epa.gov/fedrgstr/.

B. *In person*. The Agency has established an official record for this action under docket control number OPPTS–59370. The official record consists of the documents specifically referenced in this action, any public comments received during an applicable comment period, and other information related to this action, including any information claimed as confidential business information (CBI). This official record includes the documents that are physically located in the docket, as well as the documents that are referenced in those documents. The public version of the official record does not include any information claimed as CBI. The public version of the official record, which includes printed, paper versions of any electronic comments submitted during an applicable comment period, is available for inspection in the TSCA Nonconfidential Information Center (NCIC), North East Mall (NEM) Rm. B–607, Waterside Mall, 401 M St., SW., Washington, DC. The Center is open from noon to 4 p.m., Monday through Friday, excluding legal holidays. The telephone number for the Center is (202) 260–7099.

III. How and to Whom Do I Submit Comments?

The notice of receipt was published late in the 45 day review period; however, an opportunity to submit comments is being offered at this time. You may submit comments through the mail, in person, or electronically. To ensure proper receipt by EPA, it is imperative that you identify docket control number OPPTS–59370 in the subject line on the first page of your response. The complete nonconfidential document is available in the TSCA NCIC at the above address in Unit II. B. between noon and 4 p.m., Monday through Friday, excluding legal holidays. EPA may modify or revoke the test marketing exemption if comments are received which cast significant doubt on its finding that the test marketing activities will not present an unreasonable risk of injury.

A. *By mail.* Submit your comments to: Document Control Office (7407), Office of Pollution Prevention and Toxics (OPPT), Environmental Protection Agency, Ariel Rios Bldg., 1200 Pennsylvania Ave., NW., Washington, DC 20460.

B. *In person or by courier*. Deliver your comments to: OPPT Document Control Office (DCO) in East Tower Rm. G–099, Waterside Mall, 401 M St., SW., Washington, DC. The DCO is open from 8 a.m. to 4 p.m., Monday through Friday, excluding legal holidays. The telephone number for the DCO is (202) 260–7093.

C. *Electronically*. You may submit your comments electronically by e-mail to: ''oppt.ncic@epa.gov,'' or mail your computer disk to the address identified above. Do not submit any information electronically that you consider to be CBI. Electronic comments must be submitted as an ASCII file avoiding the use of special characters and any form of encryption. Comments and data will also be accepted on standard disks in WordPerfect 6.1/8.1 or ASCII file format. All comments in electronic form must be identified by docket control number OPPTS–59370. Electronic comments may also be filed online at many Federal Depository Libraries

IV. How Should I Handle CBI That I Want to Submit to the Agency?

Do not submit any information electronically that you consider to be CBI. You may claim information that you submit to EPA in response to this document as CBI by marking any part or all of that information as CBI. Information so marked will not be disclosed except in accordance with procedures set forth in 40 CFR part 2. In addition to one complete version of the comment that includes any information claimed as CBI, a copy of the comment that does not contain the information claimed as CBI must be submitted for inclusion in the public version of the official record. Information not marked confidential will be included in the public version of the official record without prior notice. If you have any questions about CBI or the procedures for claiming CBI, please consult the technical person identified under ''FOR FURTHER INFORMATION CONTACT.''

V. What Should I Consider as I Prepare My Comments for EPA?

You may find the following suggestions helpful for preparing your comments:

1. Explain your views as clearly as possible.
2. Describe any assumptions that you used.
3. Provide copies of any technical information and/or data you used that support your views.
4. If you estimate potential burden or costs, explain how you arrived at the estimate that you provide.
5. Provide specific examples to illustrate your concerns.
6. Offer alternative ways to improve the proposed rule or collection activity.
7. Make sure to submit your comments by the deadline in this document.
8. To ensure proper receipt by EPA, be sure to identify the docket control number assigned to this action in the subject line on the first page of your response. You may also provide the name, date, and **Federal Register** citation.

VI. What is the Agency's Authority for Taking this Action?

Section 5(h)(1) of TSCA and 40 CFR 720.38 authorize EPA to exempt persons from premanufacture notification (PMN) requirements and permit them to manufacture or import new chemical substances for test marketing purposes, if the Agency finds that the manufacture, processing, distribution in commerce, use, and disposal of the substances for test marketing purposes will not present an unreasonable risk of injury to health or the environment. EPA may impose restrictions on test marketing activities and may modify or revoke a test marketing exemption upon receipt of new information which casts significant doubt on its finding that the test marketing activity will not present an unreasonable risk of injury.

VII. What Action is the Agency Taking?

EPA has approved the above-referenced TME. EPA has determined that test marketing the new chemical substance, under the conditions set out in the TME application and in this notice, will not present any unreasonable risk of injury to health or the environment.

VIII. What Restrictions Apply to this TME?

The test market time period, production volume, number of customers, and use must not exceed specifications in the application and this notice. All other conditions and restrictions described in the application and in this notice must also be met.

TME 00–2

Date of Receipt: February 14, 2000.

Notice of Receipt: March 23, 2000 (65 FR 15635).

Applicant: Lonza Inc.

Chemical: N, N-(2, 5-dimethyl-1, 4-phenylene)-bis-(3-oxo)-butanamide.

Use: (G) Organic intermediate.

Production Volume: CBI.

Number of Customers: 1.

Test Marketing Period: 24 months, commencing on first day of commercial manufacture.

The following additional restrictions apply to this TME. A bill of lading accompanying each shipment must state that the use of the substance is restricted to that approved in the TME. In addition, the applicant shall maintain the following records until 5 years after the date they are created, and shall make them available for inspection or copying in accordance with section 11 of TSCA:

1. Records of the quantity of the TME substance produced and the date of manufacture.

2. Records of dates of the shipments to each customer and the quantities supplied in each shipment.

3. Copies of the bill of lading that accompanies each shipment of the TME substance.

IX. What was EPA's Risk Assessment for this TME?

EPA identified no significant environmental or human health concerns for the test market substance. Therefore, the test market activities will not present any unreasonable risk of injury to human health or the environment.

X. Can EPA Change Its Decision on this TME in the Future?

Yes. The Agency reserves the right to rescind approval or modify the conditions and restrictions of an exemption should any new information that comes to its attention cast significant doubt on its finding that the test marketing activities will not present any unreasonable risk of injury to human health or the environment.

List of Subjects

Environmental protection, Test marketing exemptions.

Dated: March 31, 2000.

Flora Chow,

Chief, New Chemicals Notice Management Branch, Office of Pollution Prevention and Toxics.

[FR Doc. 00–8541 Filed 4–5–00; 8:45 am]

BILLING CODE 6560–50–F

FEDERAL COMMUNICATIONS COMMISSION

Privacy Act System of Records

AGENCY: Federal Communications Commission (FCC or Commission).

ACTION: Notice of new privacy act systems of records.

SUMMARY: Pursuant to the provisions of the Privacy Act of 1974, as amended, (5 U.S.C. 552a), the FCC is adding a new Systems of Records, OMD–9, ''Commission Registration System'' (''CORES''). The FCC will use the records contained in FCC/OMD–9 to link payments to licensing records of the Federal Communications Commission. The functions in this Systems of Records will be performed by the Office of the Managing Director (OMD), Associate Managing Director-Financial Operations (AMD–FO). This notice meets the requirement documenting the change in the Commission's system of records, and provides the public, Congress, and the Office of Management and Budget (OMB) an opportunity to comment.

DATES: Any interested person may submit written comments concerning the routine uses of this system on or before May 8, 2000. The Office of Management and Budget (OMB), which has oversight responsibility under the Privacy Act to review these systems, may submit comments on or before May 16, 2000. These proposed systems shall be effective on May 16, 2000 unless the FCC receives comments that require a contrary determination. The Commission will publish a document in the **Federal Register** notifying the public if any changes are necessary. As required by 5 U.S.C. 552a(o) of the Privacy Act, the FCC will submit reports on these two new Systems of Records to both Houses of Congress.

ADDRESSES: Address comments to Les Smith, Performance Evaluation and Record Management, Room 1–A804, Federal Communications Commission, 445 12th Street, SW, Washington, DC 20554, or via the Internet at *lesmith@fcc.gov*.

FOR FURTHER INFORMATION CONTACT: Les Smith, Performance Evaluation and Records Management, Room 1–A804, Federal Communications Commission, 445 12th Street, SW, Washington, DC 20554 or via the Internet at *lesmith@fcc.gov* or Mary Linda Norman, AMD-Financial Operations, Federal Communications Commission, at (202) 418–1936 or via the Internet at *mlnorman@fcc.gov*.

SUPPLEMENTARY INFORMATION: As required by the Privacy Act of 1974, 5 U.S.C. 552a(e)(4), this document sets forth notice of the proposed system of records maintained by the FCC. This notice is a summary of more detailed information which may be viewed at the location given in the **ADDRESSES** section above. The purpose of maintaining FCC/OMD–9, ''Commission Registration System'' (''CORES''), is to enable the Office of the Managing Director, AMD-Financial Operations, to use the records contained on the CORES form to maintain the required accounts receivable and to collect fines and debts due the Federal Communications Commission. This information also assures that the individuals, or the entities which they represent, receive any refunds due.

FCC/OMD–9 ''Commission Registration System'' (''CORES'').

SYSTEM NAME:

Commission Registration System (''CORES'').

SYSTEM LOCATION:

Financial Operations Group, Associate Managing Director-Financial Operations (AMD–FO), Office of Managing Director (OMD), Federal Communications Commission (FCC), 445 12th Street, SW, Room 1–A625, Washington, DC 20554.

CATEGORIES OF INDIVIDUALS COVERED BY THE SYSTEM:

Records in this system include information on individuals (acting on their own behalf or on behalf of a corporate entity) who are doing business with the Federal Communications Commission. The FCC Registration Number will be assigned by the Commission Registration System (CORES). The Registration Number will be required for anyone doing business with the Commission (feeable) after December 31, 2000 to ensure that they receive any refunds due, to service public inquiries, and to comply with the Debt Collection Improvement Act of 1996.

CATEGORIES OF RECORDS IN THE SYSTEM:

Records in this system include: Names; Address(es); Social Security Numbers (SSN); Taxpayer Identification Numbers (TIN); FCC Registration Numbers (FRN); Business entity type (person or company); Telephone number(s); Fax number(s); E-mail address(es); and Addresses of individuals or entities.

AUTHORITY FOR MAINTENANCE OF THE SYSTEM:

Communications Act of 1934, as amended, Sections 8 and 9 and the Debt Collection Improvement Act of 1996, Pub. L. 104–134.

PURPOSE(S):

The primary uses of the records contained on this form are to maintain required accounts receivable, and collect fines and debts due the Federal Communications Commission. This information also assures that the individuals, or the entities which they represent, receive any refunds due.

ROUTINE USES OF RECORDS MAINTAINED IN THE SYSTEM, INCLUDING CATEGORIES OF USERS AND THE PURPOSES OF SUCH USES:

1. Where there is an indication of a violation or potential violation of a statute, regulation, rule, or order, records from this system may be referred to the appropriate Federal, State, or local agency responsible for investigating or prosecuting a violation, or for enforcing or implementing the statute, rule, regulation or order.

2. A record from this system may be disclosed to request information from a Federal, State, or local agency maintaining civil, criminal, or other relevant enforcement such as licenses, if necessary, to obtain information relevant to a FCC decision concerning the hiring or retention of an employee, the issuance of a security clearance, the letting of a contract, or the issuance of a license, grant, or other benefit.

3. A record from this system may be disclosed to a Federal agency, in response to its request, in connection with the hiring or retention of an employee, the issuance of a security clearance, the reporting of an investigation of an employee, the letting of a contract, or the issuance of a license, grant or other benefit.

4. A record on an individual in this system of records may be disclosed to a Congressional office in response to an inquiry the individual has made to the Congressional office.

5. A record on an individual in this system of records may be disclosed, where pertinent, in any legal proceeding to which the Commission is a party before a court or administrative body.

6. A record from this system of records may be disclosed to the Department of Justice or in a proceeding before a court or adjudicative body when:

7. The United States, the Commission, a component of the Commission, or, when represented by the Government, an employee of the Commission is a party to litigation or anticipated litigation or has an interest in such litigation, and

8. The Commission determines that the disclosure is relevant or necessary to the litigation.

9. A record from this system of records which concerns information on past due debts to the Federal Government may be disclosed to the Department of the Treasure, Financial Management Service, other federal agencies and/or your employer to offset your salary, IRS tax refund, or other payments to collect that debt.

In each of these cases, the FCC will determine whether disclosure of the records is compatible with the purpose for which the records were collected.

POLICIES AND PRACTICES FOR STORING, RETRIEVING, ACCESSING, RETAINING, AND DISPOSING OF RECORDS IN THE SYSTEM:

STORAGE:

Records are maintained in paper files, computer printout, and magnetic tape.

RETRIEVABILITY:

By name and/or type of transaction; Processing number; Social Security Number; Taxpayer Identification Number; FCC Registration Number; Employer Identification Number; or Sequential number.

SAFEGUARDS:

Records are located in secured metal file cabinets, metal vaults, and in metal file cabinets in secured rooms or secured premises, with access limited to those individuals whose official duties required access. Electronic record files are secured by passwords which are available only to authorized personnel whose duties require access.

RETENTION AND DISPOSAL:

Retained for two years following the end of the current fiscal year; then transferred to the Federal Records Center and destroyed when 6 years and 3 months old.

SYSTEM MANAGER(S) AND ADDRESS:

Financial Management Division, Associate Managing Director—Financial Operations (AMD–FO), Office of Managing Director (OMD), Federal Communications Commission (FCC), 445 12th Street, SW, Room 1–A625, Washington, DC 20554.

NOTIFICATION PROCEDURE:

Address inquiries to the system manager.

RECORD ACCESS PROCEDURES:

Same as above.

CONTESTING RECORD PROCEDURE:

Same as above.

RECORD SOURCE CATEGORIES:

Subject individual; Federal Reserve Bank; FCC CORES forms files; and Attorney-at-Law of the subject individual.

Federal Communications Commission.

Magalie Roman Salas,

Secretary.

[FR Doc. 00–8586 Filed 4–5–00; 8:45 am]

BILLING CODE 6712–01–P

FEDERAL COMMUNICATIONS COMMISSION

Privacy Act System of Records

AGENCY: Federal Communications Commission (FCC or Commission).

ACTION: Notice of new privacy act systems of records.

SUMMARY: Pursuant to the provisions of the Privacy Act of 1974, as amended, (5 U.S.C. 552a), the FCC is adding a new Systems of Records, OMD–8, ''Revenue Accounting Management Information System'' (''RAMIS''). The FCC will use FCC/OMD–8 to account for all monies received by the FCC from the public and refunded to the public. The functions in this Systems of Records will be performed by the Office of the Managing Director (OMD), Associate Managing Director-Financial Operations (AMD–FO).

This notice meets the requirement documenting the change in the Commission's system of records, and provides the public, Congress, and the Office of Management and Budget (OMB) an opportunity to comment.

DATES: Any interested person may submit written comments concerning the routine uses of this system on or before May 8, 2000. The Office of Management and Budget (OMB), which has oversight responsibility under the Privacy Act to review these systems, may submit comments on or before May 16, 2000. These proposed systems shall be effective on May 16, 2000 unless the FCC receives comments that require a contrary determination. The Commission will publish a document in the **Federal Register** notifying the public if any changes are necessary. As required by 5 U.S.C. 552a(o) of the Privacy Act, the FCC will submit reports on these two new Systems of Records to both Houses of Congress.

ADDRESSES: Address comments to the Les Smith, Performance Evaluation and Record Management, Room 1–A804, Federal Communications Commission, 445 12th Street, S.W., Washington, D.C. 20554, or via the Internet at *lesmith@fcc.gov.*

FOR FURTHER INFORMATION CONTACT: Les Smith, Performance Evaluation and Records Management, Room 1–A804, Federal Communications Commission, 445 12th Street, S.W., Washington, D.C. 20554 or via the Internet at *lesmith@fcc.gov* or Mary Linda Norman, AMD-Financial Operations, Room 1–A813, Federal Communications Commission, at (202) 418–1936 or via the Internet at *mlnorman@fcc.gov.*

SUPPLEMENTARY INFORMATION: As required by the Privacy Act of 1974, 5 U.S.C. 552a(e)(4), this document sets forth notice of the proposed system of records maintained by the FCC. This notice is a summary of more detailed information which may be viewed at the location given in the **''ADDRESSES''** section above. The purpose of maintaining FCC/OMD–8, ''Revenue Accounting Management Information System'' (''RAMIS''), is to enable the Office of the Managing Director, AMD-Financial Operations to account for all monies received by the FCC from the public and refunded to the public under the RAMIS system.

FCC/OMD–8 ''Revenue Accounting Management Information System''(''RAMIS'')

SYSTEM NAME:

Revenue Accounting Management Information System (''RAMIS'').

SYSTEM LOCATION:

Financial Operations Center, Associate Managing Director-Financial Operations (AMD–FO), Office of Managing Director (OMD), Federal Communications Commission (FCC), 445 12th Street, S.W., Room 1–A625, Washington, D.C. 20554.

CATEGORIES OF INDIVIDUALS COVERED BY THE SYSTEM:

Records in this system include: entities (acting on their own behalf or on behalf of a corporate entity) making payments to cover forfeitures assessed, application and regulatory fees covered, services rendered, and direct loans; refunds for incorrect payments or overpayments (including application processing fees and travel advances); billing and the collection of bad debts; and miscellaneous monies received by the Commission.

CATEGORIES OF RECORDS IN THE SYSTEM:

Records in this system include the following: Names; Social Security Numbers (SSN); Taxpayer Identification Numbers (TIN); FCC Registration Numbers (FRN); Telephone numbers; Addresses of individuals; Records of services rendered; Loan payment information; Forfeitures assessed and collected; Amounts; Dates; Check numbers; Locations; Bank deposit information; Transaction type information; United States Treasury deposit numbers; Ship name and call sign; and Information substantiating fees collected, refunds issued, and interest, penalties, and administrative charges assessed to individuals.

AUTHORITY FOR MAINTENANCE OF THE SYSTEM:

Budget and Accounting Act of 1921; Budget and Accounting Procedures Act of 1950; Federal Communications Authorization Act of 1989; and 31 U.S.C. 525.

PURPOSE(S):

The primary uses of the records are to account for all monies received by the FCC from the public and refunded to the public.

ROUTINE USES OF RECORDS MAINTAINED IN THE SYSTEM, INCLUDING CATEGORIES OF USERS AND THE PURPOSES OF SUCH USES:

1. Where there is an indication of a violation or potential violation of a statute, regulation, rule, or order, records from this system may be referred to the appropriate Federal, State, or local agency responsible for investigating or prosecuting a violation, or for enforcing or implementing the statute, rule, regulation or order.

2. A record from this system may be disclosed to request information from a Federal, State, or local agency maintaining civil, criminal, or other relevant enforcement such as licenses, if necessary, to obtain information relevant to a FCC decision concerning the hiring or retention of an employee, the issuance of a security clearance, the letting of a contract, or the issuance of a license, grant, or other benefit.

3. A record from this system may be disclosed to a Federal agency, in response to its request, in connection with the hiring or retention of an employee, the issuance of a security clearance, the reporting of an investigation of an employee, the letting of a contract, or the issuance of a license, grant or other benefit.

4. A record on an individual in this system of records may be disclosed to a Congressional office in response to an inquiry the individual has made to the Congressional office.

5. A record from this system of records may be disclosed to GSA and NARA for the purpose of records management inspections conducted under authority of 44 U.S.C. 2904 and 2906. Such disclosure shall not be used to make a determination about individuals.

6. A record on an individual in this system of records may be disclosed, where pertinent, in any legal proceeding to which the Commission is a party before a court or administrative body.

7. A record from this system of records may be disclosed to the

Department of Justice or in a proceeding before a court or adjudicative body when:

8. The United States, the Commission, a component of the Commission, or, when represented by the Government, an employee of the Commission is a party to litigation or anticipated litigation or has an interest in such litigation, and

9. The Commission determines that the disclosure is relevant or necessary to the litigation.

10. A record from this system of records which concerns information on past due debts to the Federal Government may be disclosed to the Department of the Treasury, Financial Management Service, other federal agencies and/or your employer to offset your salary, IRS tax refund, or other payments to collect that debt.

11. Records from this system of records which concerns information on pay and leave, benefits, retirement deductions, and any other pertinent information may be disclosed to the Office of Personnel Management in order for it to carry out its legally authorized Government-wide functions and duties.

12. Records from this system may be disclosed to ''consumer reporting agencies'' as defined in the Fair Credit Reporting Act (15 U.S.C. 1681a(f) of the Federal Claims Collection Act of 1996 (31 U.S.C. 3701(a)(3)).

In each of these cases, the FCC will determine whether disclosure of the records is compatible with the purpose for which the records were collected.

POLICIES AND PRACTICES FOR STORING, RETRIEVING, ACCESSING, RETAINING, AND DISPOSING OF RECORDS IN THE SYSTEM:

STORAGE:

Records are maintained in paper files, computer printout, microfiche, magnetic disc, and magnetic tape.

RETRIEVABILITY:

By name and/or type of transaction, call sign, processing number, Social Security Number, Taxpayer Identification Number (TNN), FCC Registration Number, employee identification number, fee control number, payment ID number, or sequential number.

SAFEGUARDS:

Records are located in secured metal file cabinets, metal vaults, and in metal file cabinets in secured rooms or secured premises, with access limited to those individuals whose official duties required access. Electronic record files are secured by passwords which are available only to authorized personnel whose duties require access.

RETENTION AND DISPOSAL:

Retained for two years following the end of the current fiscal year; then transferred to the Federal Records Center and destroyed when 6 years and 3 months old.

SYSTEM MANAGER(S) AND ADDRESS:

Managing Director, Office of Managing Director, Federal Communications Commission (FCC), 445 12th Street, S.W., Room 1–A625, Washington, D.C. 20554.

NOTIFICATION PROCEDURE:

Address inquiries to the system manager.

RECORD ACCESS PROCEDURES:

Same as above.

CONTESTING RECORD PROCEDURE:

Same as above.

RECORD SOURCE CATEGORIES:

Subject individual; Federal Reserve Bank; FCC RAMIS forms files; Agent of subject; and Attorney-at-Law of the subject individual.

Federal Communications Commission.

Magalie Roman Salas,

Secretary.

[FR Doc. 00–8587 Filed 4–5–00; 8:45 am]

BILLING CODE 6712–01–P

FEDERAL ELECTION COMMISSION

Sunshine Act Meeting

PREVIOUSLY ANNOUNCED DATE AND TIME: Wednesday, April 5, 2000, 10:00 A.M. Meeting Open to the Public.

The following item was added to the agenda:

Report of the Audit Division on the Missouri Democratic State Committee (A97–102).

DATE AND TIME: Tuesday, April 11, 2000 at 10:00 a.m.

PLACE: 999 E Street, N.W., Washington, D.C.

STATUS: This Meeting Will be closed to the Public.

ITEMS TO BE DISCUSSED: Compliance matters pursuant to 2 U.S.C. 437g. Audits conducted pursuant to 2 U.S.C. 437g, 438(b), and Title 26, U.S.C.

Matters concerning participation in civil actions or proceedings or arbitration.

Internal personnel rules and procedures or matters affecting a particular employee.

DATE AND TIME: Thursday, April 13, 2000 at 10:00 a.m.

PLACE: 999 E Street, N.W., Washington, D.C. (Ninth Floor).

STATUS: This meeting will be open to the public.

ITEMS TO BE DISCUSSED: Correction and Approval of Minutes. Revisions to Instructions for Forms 3 and 3X.

Administrative Matters.

PERSON TO CONTACT FOR INFORMATION: Mr. Ron Harris, Press Officer, Telephone: (202) 694–1220.

Mary W. Dove,

Acting Secretary of the Commission.

[FR Doc. 00–8638 Filed 4–4–00; 11:47 am]

BILLING CODE 6715–01–M

FEDERAL EMERGENCY MANAGEMENT AGENCY

[FEMA–1322–DR]

Alabama; Major Disaster and Related Determinations

AGENCY: Federal Emergency Management Agency (FEMA).

ACTION: Notice.

SUMMARY: This is a notice of the Presidential declaration of a major disaster for the State of Alabama (FEMA–1322–DR), dated March 17, 2000, and related determinations.

EFFECTIVE DATE: March 17, 2000.

FOR FURTHER INFORMATION CONTACT: Madge Dale, Response and Recovery Directorate, Federal Emergency Management Agency, Washington, DC 20472, (202) 646–3772.

SUPPLEMENTARY INFORMATION: Notice is hereby given that, in a letter dated March 17, 2000, the President declared a major disaster under the authority of the Robert T. Stafford Disaster Relief and Emergency Assistance Act (42 U.S.C. 5121 *et seq.*), as follows:

I have determined that the damage in certain areas of the State of Alabama, resulting from severe storms and flooding on March 10–11, 2000, is of sufficient severity and magnitude to warrant a major disaster declaration under the Robert T. Stafford Disaster Relief and Emergency Assistance Act, P.L. 93–288, as amended (''the Stafford Act''). I, therefore, declare that such a major disaster exists in the State of Alabama.

In order to provide Federal assistance, you are hereby authorized to allocate from funds available for these purposes, such amounts as you find necessary for Federal disaster assistance and administrative expenses.

You are authorized to provide Individual Assistance and Hazard Mitigation in the designated areas and any other forms of assistance under the Stafford Act you may deem appropriate. Consistent with the requirement that Federal assistance be supplemental, any Federal funds provided under the Stafford Act for Hazard Mitigation will be limited to 75 percent of the total

eligible costs. If Public Assistance is later requested and determined to be warranted, Federal funds provided under that program will also be limited to 75 percent of the total eligible costs.

Further, you are authorized to make changes to this declaration to the extent allowable under the Stafford Act.

The time period prescribed for the implementation of section 310(a), Priority to Certain Applications for Public Facility and Public Housing Assistance, 42 U.S.C. 5153, shall be for a period not to exceed six months after the date of this declaration.

Notice is hereby given that pursuant to the authority vested in the Director of the Federal Emergency Management Agency under Executive Order 12148, I hereby appoint Charles M. Butler of the Federal Emergency Management Agency to act as the Federal Coordinating Officer for this declared disaster.

I do hereby determine the following areas of the State of Alabama to have been affected adversely by this declared major disaster:

Jefferson and Tuscaloosa Counties for Individual Assistance.

All counties within the State of Alabama are eligible to apply for assistance under the Hazard Mitigation Grant Program.

(The following Catalog of Federal Domestic Assistance Numbers (CFDA) are to be used for reporting and drawing funds: 83.537, Community Disaster Loans; 83.538, Cora Brown Fund Program; 83.539, Crisis Counseling; 83.540, Disaster Legal Services Program; 83.541, Disaster Unemployment Assistance (DUA); 83.542, Fire Suppression Assistance; 83.543, Individual and Family Grant (IFG) Program; 83.544, Public Assistance Grants; 83.545, Disaster Housing Program; 83.548, Hazard Mitigation Grant Program.)

James L. Witt,

Director.

[FR Doc. 00–8502 Filed 4–5–00; 8:45 am]

BILLING CODE 6718–02–P

FEDERAL EMERGENCY MANAGEMENT AGENCY

[FEMA–1315–DR]

Georgia; Amendment No. 3 to Notice of a Major Disaster Declaration

AGENCY: Federal Emergency Management Agency (FEMA).

ACTION: Notice.

SUMMARY: This notice amends the notice of a major disaster for the State of Georgia, (FEMA–1315–DR), dated February 15, 2000, and related determinations.

EFFECTIVE DATE: March 21, 2000.

FOR FURTHER INFORMATION CONTACT: Madge Dale, Response and Recovery Directorate, Federal Emergency Management Agency, Washington, DC 20472, (202) 646–3772.

SUPPLEMENTARY INFORMATION: The notice of a major disaster for the State of Georgia is hereby amended to include the following area among those areas determined to have been adversely affected by the catastrophe declared a major disaster by the President in his declaration of February 15, 2000:

Turner County for Individual Assistance.

(The following Catalog of Federal Domestic Assistance Numbers (CFDA) are to be used for reporting and drawing funds: 83.537, Community Disaster Loans; 83.538, Cora Brown Fund Program; 83.539, Crisis Counseling; 83.540, Disaster Legal Services Program; 83.541, Disaster Unemployment Assistance (DUA); 83.542, Fire Suppression Assistance; 83.543, Individual and Family Grant (IFG) Program; 83.544, Public Assistance Grants; 83.545, Disaster Housing Program; 83.548, Hazard Mitigation Grant Program.)

Laurence W. Zensinger,

Division Director, Response and Recovery Directorate.

[FR Doc. 00–8501 Filed 4–5–00; 8:45 am]

BILLING CODE 6718–02–P

FEDERAL EMERGENCY MANAGEMENT AGENCY

[FEMA–1318–DR]

Virginia; Amendment No. 4 to Notice of a Major Disaster Declaration

AGENCY: Federal Emergency Management Agency (FEMA).

ACTION: Notice.

SUMMARY: This notice amends the notice of a major disaster for the Commonwealth of Virginia, (FEMA–1318-DR), dated February 28, 2000, and related determinations.

EFFECTIVE DATE: March 28, 2000.

FOR FURTHER INFORMATION CONTACT: Madge Dale, Response and Recovery Directorate, Federal Emergency Management Agency, Washington, DC 20472, (202) 646–3772.

SUPPLEMENTARY INFORMATION: The notice of a major disaster for the Commonwealth of Virginia is hereby amended to include the following areas among those areas determined to have been adversely affected by the catastrophe declared a major disaster by the President in his declaration of February 28, 2000:

The City of Danville and Arlington County for debris removal (Category A), emergency protective measures (Category B), and utilities (Category F) under Public Assistance.

(The following Catalog of Federal Domestic Assistance Numbers (CFDA) are to be used for reporting and drawing funds: 83.537, Community Disaster Loans; 83.538, Cora Brown Fund Program; 83.539, Crisis Counseling; 83.540, Disaster Legal Services Program; 83.541, Disaster Unemployment Assistance (DUA); 83.542, Fire Suppression Assistance; 83.543, Individual and Family Grant (IFG) Program; 83.544, Public Assistance Grants; 83.545, Disaster Housing Program; 83.548, Hazard Mitigation Grant Program.)

Lacy E. Suiter,

Executive Associate Director, Response and Recovery Directorate.

[FR Doc. 00–8499 Filed 4–5–00; 8:45 am]

BILLING CODE 6718–02–P

FEDERAL EMERGENCY MANAGEMENT AGENCY

Open Meeting, Technical Mapping Advisory Council

AGENCY: Federal Emergency Management Agency (FEMA).

ACTION: Notice of teleconference meeting.

SUMMARY: In accordance with § 10(a)(2) of the Federal Advisory Committee Act, 5 U.S.C. App. 1, the Federal Emergency Management Agency gives notice that the following meeting will be held:

Name: Technical Mapping Advisory Council.

Date of Meeting: April 18, 2000.

Place: The FEMA Conference Operator in Washington, DC will administer the teleconference. Individuals interested in participating should call 1–800–320–4330 at the time of the teleconference. Individuals interested in participating should call 1–800–320–4330 at the time of the teleconference. Callers will be prompted for the conference code, #17, and they will then be connected through to the teleconference.

Time: 2 p.m. to 4 p.m., EST.

Proposed Agenda

1. Call to order.
2. Announcements.
3. Action on minutes from March 2000 meeting.
4. Review draft annual report text on privatization of Map Modernization Program objectives.
5. Review draft annual report text on cumulative effects of watershed development.
6. Discuss agenda for June and July 2000 meetings.
7. New business.
8. Adjournment.

Status: This meeting is open to the public.

FOR FURTHER INFORMATION CONTACT: Ms. Sally P. Magee, Federal Emergency Management Agency, 500 C Street SW., room 442, Washington, DC 20472, telephone (202) 646–8242 or by facsimile at (202) 646–4596.

SUPPLEMENTARY INFORMATION: Minutes of the meeting will be prepared and will be available upon request 30 days after they have been approved by the next Technical Mapping Advisory Council meeting in June 2000.

Dated: March 29, 2000.

Michael J. Armstrong,

Associate Director for Mitigation.

[FR Doc. 00–8500 Filed 4–5–00; 8:45 am]

BILLING CODE 6718–04–P

FEDERAL RESERVE SYSTEM

Change in Bank Control Notices; Acquisitions of Shares of Banks or Bank Holding Companies

The notificants listed below have applied under the Change in Bank Control Act (12 U.S.C. 1817(j)) and § 225.41 of the Board's Regulation Y (12 CFR 225.41) to acquire a bank or bank holding company. The factors that are considered in acting on the notices are set forth in paragraph 7 of the Act (12 U.S.C. 1817(j)(7)).

The notices are available for immediate inspection at the Federal Reserve Bank indicated. The notices also will be available for inspection at the offices of the Board of Governors. Interested persons may express their views in writing to the Reserve Bank indicated for that notice or to the offices of the Board of Governors. Comments must be received not later than April 20, 2000.

A. Federal Reserve Bank of San Francisco (Maria Villanueva, Consumer Regulation Group) 101 Market Street, San Francisco, California 94105–1579:

1. *John L. Gilbert,* Fairfield, Washington, to acquire additional voting shares of Lath Bancorporation, Inc., Latah, Washington, and thereby indirectly acquire voting shares of Bank of Latah, Saint Maries, Idaho.

Board of Governors of the Federal Reserve System, March 31, 2000.

Robert deV. Frierson,

Associate Secretary of the Board.

[FR Doc. 00–8412 Filed 4–5–00; 8:45 am]

BILLING CODE 6210–01–P

FEDERAL RESERVE SYSTEM

Formations of, Acquisitions by, and Mergers of Bank Holding Companies

The companies listed in this notice have applied to the Board for approval, pursuant to the Bank Holding Company Act of 1956 (12 U.S.C. 1841 *et seq.*) (BHC Act), Regulation Y (12 CFR part 225), and all other applicable statutes and regulations to become a bank holding company and/or to acquire the assets or the ownership of, control of, or the power to vote shares of a bank or bank holding company and all of the banks and nonbanking companies owned by the bank holding company, including the companies listed below.

The applications listed below, as well as other related filings required by the Board, are available for immediate inspection at the Federal Reserve Bank indicated. The application also will be available for inspection at the offices of the Board of Governors. Interested persons may express their views in writing on the standards enumerated in the BHC Act (12 U.S.C. 1842(c)). If the proposal also involves the acquisition of a nonbanking company, the review also includes whether the acquisition of the nonbanking company complies with the standards in section 4 of the BHC Act (12 U.S.C. 1843). Unless otherwise noted, nonbanking activities will be conducted throughout the United States. Additional information on all bank holding companies may be obtained from the National Information Center website at www.ffiec.gov/nic/.

Unless otherwise noted, comments regarding each of these applications must be received at the Reserve Bank indicated or the offices of the Board of Governors not later than May 1, 2000.

A. Federal Reserve Bank of Chicago (Phillip Jackson, Applications Officer) 230 South LaSalle Street, Chicago, Illinois 60690–1414:

1. Ida Grove Bancshares, Inc., Ida Grove, Iowa, and American Bancshares, Inc., Holstein, Iowa; to acquire at least 80.1 percent of the voting shares of American National Bank (in organization), Sac City, Iowa.

Board of Governors of the Federal Reserve System, March 31, 2000.

Robert deV. Frierson,

Associate Secretary of the Board.

[FR Doc. 00–8411 Filed 4–5–00; 8:45 am]

BILLING CODE 6210–01–P

DEPARTMENT OF HEALTH AND HUMAN SERVICES

Centers for Disease Control and Prevention

Board of Scientific Counselors, National Center for Infectious Diseases: Meeting

In accordance with section 10(a)(2) of the Federal Advisory Committee Act (Pub. L. 92–463), the Centers for Disease Control and Prevention (CDC) announces the following committee meeting.

Name: Board of Scientific Counselors, National Center for Infectious Diseases (NCID).

Times and Dates: 9 a.m.–5:30 p.m., May 4, 2000. 8:30 a.m.–2:30 p.m., May 5, 2000.

Place: CDC, Conference Room Building 17, 1600 Clifton Road, Atlanta, Georgia 30333.

Status: Open to the public, limited only by the space available.

Purpose: The Board of Scientific Counselors, NCID, provides advice and guidance to the Director, CDC, and Director, NCID, in the following areas: program goals and objectives; strategies; program organization and resources for infectious disease prevention and control; and program priorities.

Matters To Be Discussed: Agenda items will include:

1. NCID Update.
2. CDC Facilities Master Plan.
3. Laboratory Response Capacity.
4. Integrating Surveillance Systems—NEDSS.
5. Current Issues in Vaccine Development: GAVU, Vaccine Safety.
6. Tour of New Facility: Building 17.
7. Discussions.
8. Improving Communications.
9. Program Update: Mycotic Diseases.
10. Transfer of Interstate Quarantine Authority.
11. Late Breaker: Current Scientific Event.
12. Discussions and Recommendations.

Other agenda items include announcements/introductions; follow-up on actions recommended by the Board December 1999; consideration of future directions, goals, and recommendations.

Agenda items are subject to change as priorities dictate.

Written comments are welcome and should be received by the contact person listed below prior to the opening of the meeting.

CONTACT PERSON FOR MORE INFORMATION: Diane S. Holley, Office of the Director, NCID, CDC, Mailstop C–20, 1600 Clifton

Road, NE., Atlanta, Georgia 30333, telephone 404/639–0078.

The Director, Management Analysis and Services office has been delegated the authority to sign **Federal Register** notices pertaining to announcements of meetings and other committee management activities, for both the Centers for Disease Control and Prevention and the Agency for Toxic Substances and Disease Registry.

Dated: March 30, 2000.

Carolyn J. Russell,

Director, Management Analysis and Services Office, Centers for Disease Control and Prevention.

[FR Doc. 00–8436 Filed 4–5–00; 8:45 am]

BILLING CODE 4163–18–P

DEPARTMENT OF HEALTH AND HUMAN SERVICES

Administration for Children and Families

Submission for OMB Review; Comment Request

Title: Child Welfare Demonstration Project Information Collection.

OMB No.: New Collection.

Description: Under section 1130 of the Social Security Act, the Department of Health and Human Services is given authority to approve up to ten States for Child Welfare demonstrations in each of the five fiscal years 1998–2002. These demonstration projects involve the waiver of certain requirements of titles IV–B and IV–E, the sections of the Act that govern foster care, adoption assistance, independent living, child welfare services, promoting safe and stable families, family preservation and support, and related expenses for program administration, training, and automated systems. Child Welfare demonstration projects operating under this waiver authority are required to be consistent with the purposes of existing law, cost-neutral to the Federal government, and independently evaluated. This authority provides an opportunity for States to design and test a wide range of approaches to improve and reform child welfare. Such demonstrations should provide valuable knowledge that will lead to improvements in the delivery, effectiveness and efficiency of services.

The information collection consists of seven components, which are outlined in the Information Memorandum: (1) Application; (2) Initial Design and Implementation Report; (3) Evaluation Plan; (4) Quarterly Reports (Pre-Implementation); (5) Semi-Annual Reports (Post-Implementation); (6) Interim Evaluation Report; and (7) Final Report. The primary purpose of the demonstrations is to produce information on the outcomes for children and their families. These collections lay the information infrastructure to facilitate the dissemination of this information. If data collection is not conducted for the child welfare demonstrations, the Department relinquishes all pertinent information required to test the impact of the intervention employed in the waivers, specifically the effect of allowing the flexible use of IV–E dollars in the delivery of child welfare services. Furthermore, ensuring the safety and welfare of children is of utmost importance to CB, and if data is conducted less frequently than required by the project, interim results that could affect the well-being of children can be overlooked.

Respondents

ANNUAL BURDEN ESTIMATES

Instrument	Number of respondents	Number of responses per respondent	Average burden hours per response	Total burden hours
Application	10	1	120	1,200
Initial design	55	1	40	2,200
Evaluation plan	55	1	40	2,200
Quarterly report	55	4	24	1,320
Semi-annual reports	55	1	80	4,400
Interim evaluation report	55	1	120	6,600
Final report	55	1	160	8,800
Estimated total annual burden hours				26,720

Additional Information: Copies of the proposed collection may be obtained by writing to The Administration for Children and Families, Office of Information Services, 370 L'Enfant Promenade, S.W., Washington, D.C. 20447, Attn: ACF Reports Clearance Officer.

OMB Comment: OMB is required to make a decision concerning the collection of information between 30 and 60 days after publication of this document in the **Federal Register**. Therefore, a comment is best assured of having its full effect if OMB receives it within 30 days of publication. Written comments and recommendations for the proposed information collection should be sent directly to the following: Office of Management and Budget, Paperwork Reduction Project, 725 17th Street, N.W., Washington, D.C. 20503, Attn: Desk Officer for ACF.

Dated: March 30, 2000.

Bob Sargis,

Reports Clearance Officer.

[FR Doc. 00–8482 Filed 4–5–00; 8:45 am]

BILLING CODE 4184–01–M

DEPARTMENT OF HEALTH AND HUMAN SERVICES

Administration for Children and Families

Office of Planning, Research and Evaluation; Grant to the University of Colorado Health Sciences Center

AGENCY: Office of Planning, Research and Evaluation, ACF, DHHS.

ACTION: Award announcement.

SUMMARY: Notice is hereby given that a noncompetitive grant award is being made to the University of Colorado Health Sciences Center. Under the title of ''Economic Analysis of the Prenatal and Early Childhood Nurse Home Visitation Program,'' the project

proposes to carry out the second phase of a net-cost analysis of a program of prenatal and infancy home visiting.

This project is being funded noncompetitively, because of its uniqueness in examining cost savings to government resulting from an investment in a program of prenatal and early childhood home visitation. The duration of this project is two years, beginning April 1, 2000, for a total cost of $312,766.

FOR FURTHER INFORMATION CONTACT: K.A. Jagannathan, Administration for Children and Families, Office of Planning, Research and Evaluation, 370 L'Enfant Promenade, SW, Washington, DC 20447, Phone: 202–205–4829.

Dated: March 31, 2000.

Howard Rolston,

Director, Office of Planning, Research and Evaluation.

[FR Doc. 00–8409 Filed 4–5–00; 8:45 am]

BILLING CODE 4184–01–M

DEPARTMENT OF HEALTH AND HUMAN SERVICES

Administration for Children and Families

Senior Executive Service; Performance Review Board Members

AGENCY: Administration for Children and Families.

ACTION: Announcing appointment of Performance Review Board members.

SUMMARY: 5 U.S.C. 4314(c)(4) of the Civil Service Reform Act of 1978, Pub. L. 95–454, requires that the appointment of Performance Review Board members be published in the **Federal Register.**

The following persons will serve on the Performance Review Boards or Panels which oversee the evaluation of performance appraisals of Senior Executive Service members of the Department of Health and Human Services, Administration for Children and Families: Diann Dawson, Leon R. McCowan, Madeline Mocko.

Dated: March 29, 2000.

Elizabeth M. James Duke,

Deputy Assistant Director for Administration, Office of Administration.

[FR Doc. 00–8413 Filed 4–5–00; 8:45 am]

BILLING CODE 4184–01–M

DEPARTMENT OF HEALTH AND HUMAN SERVICES

Food and Drug Administration

[Docket No. 00N–1060]

Agency Information Collection Activities; Proposed Collection; Comment Request; Adoption of the FDA Food Code by Local, State, and Tribal Governments

AGENCY: Food and Drug Administration, HHS.

ACTION: Notice.

SUMMARY: The Food and Drug Administration (FDA) is announcing an opportunity for public comment on the proposed collection of certain information by the agency. Under the Paperwork Reduction Act of 1995 (the PRA), Federal agencies are required to publish notice in the **Federal Register** concerning each proposed collection of information, and to allow 60 days for public comment in response to the notice. This notice solicits comments on FDA's collection of information from local, State, and tribal agencies concerning their adoption of, or plans to adopt, all or portions of the FDA Food Code or its equivalent by regulation, law, or ordinance. The Association of Food and Drug Officials (AFDO) has been contracted by FDA to telephonically and/or electronically contact local, State, and tribal food program administrators to determine Food Code adoption in their respective jurisdictions.

DATES: Submit written comments on the collection of information by June 5, 2000.

ADDRESSES: Submit written comments on the collection of information to the Dockets Management Branch (HFA–305), Food and Drug Administration, 5630 Fishers Lane, rm. 1061, Rockville, MD 20852. All comments should be identified with the docket number found in brackets in the heading of this document.

FOR FURTHER INFORMATION CONTACT: JonnaLynn P. Capezzuto, Office of Information Resources Management (HFA–250), Food and Drug Administration, 5600 Fishers Lane, Rockville, MD 20857, 301–827–4659.

SUPPLEMENTARY INFORMATION: Under the PRA (44 U.S.C. 3501–3520), Federal agencies must obtain approval from the Office of Management and Budget (OMB) for each collection of information they conduct or sponsor. ''Collection of information'' is defined in 44 U.S.C. 3502(3) and 5 CFR 1320.3(c) and includes agency requests or requirements that members of the public submit reports, keep records, or provide information to a third party. Section 3506(c)(2)(A) of the PRA (44 U.S.C. 3506(c)(2)(A)) requires Federal agencies to provide a 60-day notice in the **Federal Register** concerning each proposed collection of information, before submitting the collection to OMB for approval. To comply with this requirement, FDA is publishing notice of the proposed collection of information set forth in this document.

With respect to the following collection of information, FDA invites comments on: (1) Whether the proposed collection of information is necessary for the proper performance of FDA's functions, including whether the information will have practical utility; (2) the accuracy of FDA's estimate of the burden of the proposed collection of information, including the validity of the methodology and assumptions used; (3) ways to enhance the quality, utility, and clarity of the information to be collected; and (4) ways to minimize the burden of the collection of information on respondents, including through the use of automated collection techniques, when appropriate, and other forms of information technology.

Adoption of the FDA Food Code by Local, State, and Tribal Governments

FDA has developed the model Food Code to assist and promote consistent implementation of national food safety regulatory policy among the several thousand local, State, and tribal jurisdictions that have primary responsibility for the regulation or oversight of retail level food operations. The FDA Food Code provides a scientifically sound technical and legal basis for regulating the retail segment of the food industry. Authority for providing such assistance is derived from section 311(a) of the Public Health Service Act (42 U.S.C. 243) and delegation of authority from the Public Health Service to the Commissioner of Food and Drugs relative to food protection is contained in 21 CFR 5.10(a)(2) and (a)(4). Under 31 U.S.C. 1535, FDA provides assistance to other Federal agencies such as the Indian Health Service.

Nationwide adoption of the model FDA Food Code is an important step to further the goals of the President's Council on Food Safety for consistent, scientifically sound, and risk-based food safety standards and practices and to work more effectively with partners in State, local, and tribal governments. FDA has established a site on the Internet at http://www.cfsan. fda.gov under ''Federal/State Food Programs''

and ''Retail Food Safety References'' to list jurisdictions that have reported adoptions of the FDA Food Code. Because it is self-reported, the list is incomplete and has not been evaluated to determine whether all the adopted codes are equivalent to the model Food Code. It is important to FDA to have a comprehensive, accurate, and current inventory of Food Code adoptions to help achieve the aims of the President's Council on Food Safety and the agency's Food Safety Initiative goals.

FDA has obtained the services of AFDO to develop and implement an active surveillance system to track and report on the adoption of the FDA Food Code by State and local agencies and tribal nations of native Americans. The contractor will develop and maintain an active data base to track adoptions of the Food Code; identify and periodically contact State, local, and tribal food safety program administrators to determine the current status of adoptions of the Food Code or its equivalent; evaluate the equivalency of the adopted codes with the FDA Food Code; and provide quarterly progress reports to FDA from the data base in tabular and graphic form. Reports may be placed on the Internet at http://www.fda.gov.

Initial contacts by AFDO to local, State, and tribal program administrators will be by telephone and/or e-mail to determine the Food Code status in their jurisdiction(s). Verbal responses to questions will be acceptable as will electronic or facsimile information. Followup contacts to clarify responses will be by telephone or e-mail to minimize the burden on respondents.

The types of questions to be asked will be whether or not the FDA Food Code has been adopted in the respondent's jurisdiction, which version of the Food Code is in effect, and if not, which local jurisdictions need to be contacted for Food Code adoption status. AFDO will also determine with the local/State/tribal governments that it has the latest version of the code for analysis.

FDA estimates the burden of this collection of information as follows:

TABLE 1.—ESTIMATED ANNUAL REPORTING BURDEN[1]

No. of Respondents	Annual Frequency per Response	Total Annual Responses	Hours per Response	Total Hours
500	2	1,000	1	1,000
Total Hours				1,000

[1] There are no capital costs or operating and maintenance costs associated with this collection of information.

FDA based its estimate on the number of State agencies (100) involved in Food Code-related regulatory programs, 300 local agencies with local ordinance authority that may consider Food Code adoption in any one year, and 100 tribal agencies. Estimating the number of local agencies is difficult before the start of this project because in some States, adoption by a State agency automatically applies to all local jurisdictions in that state. In other States, some metropolitan jurisdictions may adopt the FDA Food Code individually. Similar circumstances may apply to tribal nations' agencies that may be adopting the FDA Food Code. When the initial information gathering is completed, FDA will be able to identify more accurately the number of local and tribal agencies for which tracking adoption of the FDA Food Code will be necessary.

Frequency of reporting will range from once per year to quarterly for any one jurisdiction. This is because agencies that have already adopted the Food Code will require less frequent contact, perhaps only annually, than those that are in the process of adopting the Food Code. An average of two contacts in 1 year, therefore, was selected. Because most reporting will be done telephonically or electronically, reporting times often will be much less than 1 hour.

These estimates will fluctuate from year to year as agencies adopt, revise, and consider adoption of the FDA Food Code. Over the next 3 years, the frequency of contacts should decrease as jurisdictions adopt the FDA Food Code. This project will take several years to complete because the adoption process in some States can extend to 2 years or more. For example, some States have biennial legislative sessions. Others have extensive notice-and-comment administrative rulemaking procedures that can extend well beyond 1 year.

Dated: March 30, 2000.

William K. Hubbard,

Senior Associate Commissioner for Policy, Planning, and Legislation.

[FR Doc. 00–8416 Filed 4–5–00; 8:45 am]

BILLING CODE 4160–01–F

DEPARTMENT OF HEALTH AND HUMAN SERVICES

Food and Drug Administration

[Docket No. 99N–4166]

Agency Information Collection Activities; Submission for OMB Review; Comment Request; Electronic Records; Electronic Signatures

AGENCY: Food and Drug Administration, HHS.

ACTION: Notice.

SUMMARY: The Food and Drug Administration (FDA) is announcing that the proposed collection of information listed below has been submitted to the Office of Management and Budget (OMB) for review and clearance under the Paperwork Reduction Act of 1995.

DATES: Submit written comments on the collection of information by May 8, 2000.

ADDRESSES: Submit written comments on the collection of information to the Office of Information and Regulatory Affairs, OMB, New Executive Office Bldg., 725 17th St. NW., rm. 10235, Washington, DC 20503, Attn: Wendy Taylor, Desk Officer for FDA.

FOR FURTHER INFORMATION CONTACT: JonnaLynn P. Capezzuto, Office of Information Resources Management (HFA–250), Food and Drug Administration, 5600 Fishers Lane, Rockville, MD 20857, 301–827–4659.

SUPPLEMENTARY INFORMATION: In compliance with 44 U.S.C. 3507, FDA has submitted the following proposed collection of information to OMB for review and clearance.

Electronic Records; Electronic Signatures—Part 11 (21 CFR Part 11) (OMB Control Number 0910–0303)—Extension

FDA regulations in part 11 (21 CFR part 11) provide criteria for acceptance by FDA of electronic records, electronic signatures, and handwritten signatures executed to electronic records as equivalent to paper records and handwritten signatures executed on

paper. Under these regulations, records and reports may be submitted to FDA electronically, provided the agency has stated its ability to accept the records electronically in an agency-established public docket and that the other requirements of part 11 are met.

The recordkeeping provisions in part 11 (§§ 11.10, 11.30, 11.50, and 11.300) require standard operating procedures (SOP's) to ensure appropriate use of, and precautions for, systems using electronic records and signatures: (1) § 11.10 specifies procedures and controls for persons who use closed systems to create, modify, maintain, or transmit electronic records; (2) § 11.30 specifies procedures and controls for persons who use open systems to create, modify, maintain, or transmit electronic records; (3) § 11.50 specifies controls for signed electronic records; and (4) § 11.300 specifies controls to ensure the security and integrity of electronic signatures based upon use of identification codes in combination with passwords.

The burden created by the information collection provision of this regulation is a one-time burden associated with the creation of SOP's and validation. FDA anticipates the use of electronic media will substantially reduce the paperwork burden associated with maintaining FDA-required records.

The respondents will be businesses and other for-profit organizations, State or local governments, Federal agencies, and nonprofit institutions.

In the **Federal Register** of October 1, 1999 (64 FR 53392), in accordance with 5 CFR 1320.8(d), FDA announced an opportunity for public comment on the proposed collection of information on electronic records and electronic signatures. Comments from five respondents were received. In general, these comments addressed the costs of complying with the technical provisions of part 11 or used the opportunity as a forum to comment on the outcome of the final rule. Seven of these comments addressed the information collection and, in general, asserted that FDA had either underestimated the burden or had not considered all of the reporting and recordkeeping requirements. The comments on the information collection are addressed below.

(Comment 1) One comment submitted by industry stated that the creation of SOP's is not a one-time burden. It believes that the SOP's must be periodically reviewed and revised. FDA only requires the development of SOP's. FDA acknowledges that SOP's may need to be updated from time to time, but not necessarily because of an FDA requirement. If industry chooses to change their internal operations, then the associated change/update to the SOP's is a result of the company's choice to make changes, not a result of FDA requiring the change. Should SOP's need to be modified as a result of future changes to FDA regulations, FDA will consider the associated information collection burdens at the time it revises the relevant regulations.

(Comment 2) One comment asserted that the issuance of guidance documents further defines the expectations of FDA and, as such, requires industry to modify procedures and systems to reflect these new expectations. FDA recognizes that guidance documents may have additional reporting or recordkeeping requirements, however, the associated burden will be tied to the specific guidance document, and is not a part of this information collection. FDA will separately submit to OMB for review and clearance, any additional proposed collection of information associated with guidances.

(Comment 3) One comment stated that the regulation required industry to provide FDA with copies of software, as well as data. The comment added that this ''requirement'' places industry in the position of violating or renegotiating license agreements in order to comply with part 11. Part 11 does not require companies to provide FDA with copies of software.

(Comment 4) One comment asserted that FDA had ignored the burden in part 11 that requires industry to maintain records in electronic format for the full retention period. Electronic records must be retained for the same period applicable regulations require the equivalent paper records retained. The burden for retaining the records, in whatever form, is accounted for in the applicable FDA regulations.

(Comment 5) Two comments addressed the requirement for certification of electronic signatures. While reviewing these comments, FDA realized that under 5 CFR 1320.3(h)(1), ''affidavits, oaths, affirmations, certifications, receipts, changes of address, consents, or acknowledgments'' are not deemed to constitute a collection of information. Therefore, the reference to certification and the associated burden are being removed.

(Comment 6) One comment stated that its internal bureaucracy is such that it takes a long time to develop and approve a simple SOP, and therefore, FDA's estimate of cost was inaccurate. FDA has estimated the average annual burden. It will take some respondents more time and some less to develop and approve an SOP.

FDA estimates the burden of this collection of information as follows:

TABLE 1.—ESTIMATED ANNUAL RECORDKEEPING BURDEN[1]

21 CFR Section	No. of Recordkeepers	Annual Frequency per Recordkeeping	Total Annual Records	Hours per Recordkeeper	Total Hours
11.10	2,250	1	2,250	20	45,000
11.30	2,250	1	2,250	20	45,000
11.50	4,500	1	4,500	20	90,000
11.300	4,500	1	4,500	20	90,000
Total					270,000

[1] There are no capital costs or operating and maintenance costs associated with this collection of information.

The burden created by this regulation is a one-time burden associated with the creation of SOP's and validation. The numbers reflect the combination of FDA's 3 years of experience in administering the program and an anticipated increase in the number of respondents. As the opportunity to submit and maintain documents electronically becomes more available to the public, the number of participants is expected to increase.

Dated: March 30, 2000.

William K. Hubbard,

Senior Associate Commissioner for Policy, Planning, and Legislation.

[FR Doc. 00–8415 Filed 4–5–00; 8:45 am]

BILLING CODE 4160–01–F

DEPARTMENT OF HEALTH AND HUMAN SERVICES

Food and Drug Administration

Gastrointestinal Drugs Advisory Committee; Cancellation

AGENCY: Food and Drug Administration, HHS.

ACTION: Notice.

SUMMARY: The Food and Drug Administration (FDA) is canceling the meeting of the Gastrointestinal Drugs Advisory Committee scheduled for April 12, 2000. This meeting was announced in the **Federal Register** of February 17, 2000 (65 FR 8180).

FOR FURTHER INFORMATION CONTACT: Karen M. Templeton-Somers, Center for Drug Evaluation and Research (HFD–21), Food and Drug Administration, 5600 Fishers Lane, Rockville, MD 20857, 301–827–7001, or FDA Advisory Committee Information Line, 1–800–741–8138 (301–443–0572 in the Washington, DC area), code 12538.

Dated: March 28, 2000.

Linda A. Suydam,

Senior Associate Commissioner.

[FR Doc. 00–8414 Filed 4–5–00; 8:45 am]

BILLING CODE 4160–01–F

DEPARTMENT OF HEALTH AND HUMAN SERVICES

Health Resources and Services Administration

Agency Information Collection Activities: Submission for OMB Review; Comment Request

Periodically, the Health Resources and Services Administration (HRSA) publishes abstracts of information collection requests under review by the Office of Management and Budget, in compliance with the Paperwork Reduction Act of 1995 (44 U.S.C. Chapter 35). To request a copy of the clearance requests submitted to OMB for review, call the HRSA Reports Clearance Office on (301)–443–1129.

The following request has been submitted to the Office of Management and Budget for review under the Paperwork Reduction Act of 1995:

Proposed Project: Healthcare Integrity and Protection Data Bank for Final Adverse Information on Health Care Providers, Suppliers, and Practitioners—(OMB 0915–0239)—EXTENSION

Section 221(a) of the Health Insurance Portability and Accountability Act (HIPAA) of 1996 specifically directs the Secretary to establish a national health care fraud and abuse data collection program for the reporting and disclosure of certain final adverse actions taken against health care providers, suppliers, and practitioners. A final rule was published October 26, 1999 in the **Federal Register** to implement the statutory requirements of section 1128E of the Social Security Act (The Act) as added by Section 221(a) of HIPAA. The Act requires the Secretary to implement the national health care fraud and abuse data collection program. This data bank is known as the Healthcare Integrity and Protection Data Bank (HIPDB). It contains the following types of information: (1) Civil judgments against a health care provider, supplier, or practitioner in Federal or State court related to the delivery of a health care item or service; (2) Federal or State criminal convictions against a health care provider, supplier, or practitioner related to the delivery of a health care item or service; (3) Actions by Federal or State agencies responsible for the licensing and certification of health care providers, suppliers, or practitioners; (4) Exclusion of a health care provider, supplier, or practitioner from participation in Federal or State health care programs; and (5) Any other adjudicated actions or decisions that the Secretary shall establish by regulations. Access to this data bank is limited to Federal and State Government agencies and health plans.

The Estimated Response Burden Is As Follows

Regulation citation	Number of respond.	Respon. per respond.	Total respon.	Hrs. per respon.	Total burden hours
61.6 Errors & Omissions	1,200	1	1,200	25 min	500
61.6 Revisions/appeal status	1,000	1	1,000	75 min	1,250
61.7 Licensure actions:					
Disclosure by State licensing boards	1,836	22	40,400	75 min	50,500
Reporting by State Licensing Authorities	216	187	40,400	15 min	10,100
61.8 Reporting of State criminal convictions	54	13	700	75 min	875
61.9 Reporting of Civil Judgments	62	8	500	75 min	625
61.11 Reporting of adjudicated actions/decisions.	66	12	800	75 min	1,000
61.12 Access to data (queries/self queries):					
State licensure Boards	1,000	75	75,000	5 min	6,250
State certification agencies	54	3	162	5 min.	14
States/district attorneys & law enforcement	2,000	25	50,000	5 min	4,166
State Medicaid fraud units	47	50	2,350	5 min	196
Health plans	2,500	400	1,000,000	5 min	83,333
Health care providers, suppliers and practitioners (self query).	60,000	1	60,000	25 min	25,000
Entity registration	5,000	1	5,000	30 min	2,500
Entity registration update	250	1	250	15 min.	62
Authorized agent designation	100	1	100	10 min.	16
Authorized agent designation update	5	1	5	5 min	0.42
61.15 Disputed reports/secretarial review.					
Initial request	750	1	750	10 min	125
Request for secretarial review	37	1	37	480 min	296
Total	76,177		1,278,654		186,808

Other Forms Used in the Management of the HIPDB Include the Following:

Form name	Number of respond.	Respon. per respond.	Total respon.	Hrs. per respon.	Total burden hours
Account discrepancy	2,000	1	2,000	5 min	166
Electronic funds transfer authorization.	850	1	850	5 min.	70
Entity reactivation	500	1	500	15 min	125
Total	3,350		3,350		361

Written comments and recommendations concerning the proposed information collection should be sent within 30 days of this notice to: Wendy A. Taylor, Human Resources and Housing Branch, Office of Management and Budget, New Executive Office Building, Room 10235, Washington, DC 20503.

Dated: March 29, 2000.

James J. Corrigan,

Associate Administrator for Management and Program Support.

[FR Doc. 00–8479 Filed 4–5–00; 8:45 am]

BILLING CODE 4160–15–U

DEPARTMENT OF HEALTH AND HUMAN SERVICES

Health Resources and Services Administration

National Vaccine Injury Compensation Program; List of Petitions Received

AGENCY: Health Resources and Services Administration, HHS.

ACTION: Notice.

SUMMARY: The Health Resources and Services Administration (HRSA) is publishing this notice of petitions received under the National Vaccine Injury Compensation Program (''the Program''), as required by section 2112(b)(2) of the Public Health Service (PHS) Act, as amended. While the Secretary of Health and Human Services is named as the respondent in all proceedings brought by the filing of petitions for compensation under the Program, the United States Court of Federal Claims is charged by statute with responsibility for considering and acting upon the petitions.

FOR FURTHER INFORMATION CONTACT: For information about requirements for filing petitions, and the Program in general, contact the Clerk, United States Court of Federal Claims, 717 Madison Place, NW, Washington, DC 20005, (202) 219–9657. For information on HRSA's role in the Program, contact the Director, National Vaccine Injury Compensation Program, 5600 Fishers Lane, Room 8A–46, Rockville, MD 20857; (301) 443–6593.

SUPPLEMENTARY INFORMATION: The Program provides a system of no-fault compensation for certain individuals who have been injured by specified childhood vaccines. Subtitle 2 of title XXI of the PHS Act, 42 U.S.C. 300aa–10 *et seq.*, provides that those seeking compensation are to file a petition with the U.S. Court of Federal Claims and to serve a copy of the petition on the Secretary of Health and Human Services, who is named as the respondent in each proceeding. The Secretary has delegated her responsibility under the Program to HRSA. The Court is directed by statute to appoint special masters who take evidence, conduct hearings as appropriate, and make initial decisions as to eligibility for, and amount of, compensation.

A petition may be filed with respect to injuries, disabilities, illnesses, conditions, and deaths resulting from vaccines described in the Vaccine Injury Table (the Table) set forth at section 2114 of the PHS Act or as set forth at 42 CFR 100.3, as applicable. This Table lists for each covered childhood vaccine the conditions which will lead to compensation and, for each condition, the time period for occurrence of the first symptom or manifestation of onset or of significant aggravation after vaccine administration. Compensation may also be awarded for conditions not listed in the Table and for conditions that are manifested after the time periods specified in the Table, but only if the petitioner shows that the condition was caused by one of the listed vaccines.

Section 2112(b)(2) of the PHS Act, 42 U.S.C. 300aa–12(b)(2), requires that the Secretary publish in the **Federal Register** a notice of each petition filed. Set forth below is a list of petitions received by HRSA on April 1, 1999, through September 27, 1999.

Section 2112(b)(2) also provides that the special master ''shall afford all interested persons an opportunity to submit relevant, written information'' relating to the following:

1. The existence of evidence ''that there is not a preponderance of the evidence that the illness, disability, injury, condition, or death described in the petition is due to factors unrelated to the administration of the vaccine described in the petition,'' and

2. Any allegation in a petition that the petitioner either:

(a) ''Sustained, or had significantly aggravated, any illness, disability, injury, or condition not set forth in the Table but which was caused by'' one of the vaccines referred to in the Table, or

(b) ''Sustained, or had significantly aggravated, any illness, disability, injury, or condition set forth in the Table the first symptom or manifestation of the onset or significant aggravation of which did not occur within the time period set forth in the Table but which was caused by a vaccine'' referred to in the Table.

This notice will also serve as the special master's invitation to all interested persons to submit written information relevant to the issues described above in the case of the petitions listed below. Any person choosing to do so should file an original and three (3) copies of the information with the Clerk of the U.S. Court of Federal Claims at the address listed above (under the heading ''For Further Information Contact''), with a copy to HRSA addressed to Director, Bureau of Health Professions, 5600 Fishers Lane, Room 8–05, Rockville, MD 20857. The Court's caption (Petitioner's Name v. Secretary of Health and Human Services) and the docket number assigned to the petition should be used as the caption for the written submission.

Chapter 35 of title 44, United States Code, related to paperwork reduction, does not apply to information required for purposes of carrying out the Program.

List of Petitions

1. Anita Szpotowicz on behalf of Andrew Szpotowicz, Cleveland, Ohio,

Court of Federal Claims Number 99–0192V
2. Jan Malloy on behalf of Laura Malloy, Hazelton, Pennsylvania, Court of Federal Claims Number 99–0193V
3. Lisa A. Lippa, Henderson, Kentucky, Court of Federal Claims Number 99–0202V
4. O. Lisa Persinger, Forsyth, Missouri, Court of Federal Claims Number 99–0204V
5. Marilyn Kirschner on behalf of Lindsay Kirschner, Vienna, Virginia, Court of Federal Claims Number 99–0206V
6. Phyllis Noe, Vienna, Virginia, Court of Federal Claims Number 99–0207V
7. April Oakes on behalf of Cassie Oakes, Vienna, Virginia, Court of Federal Claims Number 99–0208V
8. Roy Pearl on behalf of Traci Pearl, Vienna, Virginia, Court of Federal Claims Number 99–0209V
9. Scott Pearl, Vienna, Virginia, Court of Federal Claims Number 99–0210V
10. Nahla and Babekir Ahmed on behalf of Mohamed Babekir Ahmed, Alexandria, Virginia, Court of Federal Claims Number 99–0211V
11. Kim and Lamar Visarraga on behalf of Monica Marie Visarraga, Deceased, Sacramento, California, Court of Federal Claims Number 99–0212V
12. Terry Withers on behalf of Parker Withers, Las Vegas, Nevada, Court of Federal Claims Number 99–0213V
13. Mary and Vernon Johnson on behalf of Hillary Johnson, Worcester, Massachusetts, Court of Federal Claims Number 99–0219V
14. Sherry and Michael Battisti on behalf of Anthony Battisti, Rochester, New York, Court of Federal Claims Number 99–0223V
15. Laurie Mabee, White Cloud, Michigan, Court of Federal Claims Number 99–0230V
16. Victoria and Scott Shelton on behalf of Taylor V. Shelton, Vienna, Virginia, Court of Federal Claims Number 99–0234V
17. Elizabeth Hyla, Buffalo, New York, Court of Federal Claims Number 99–0238V
18. Kalena Woolf on behalf of Tala Dawn Woolf, Deceased, Texarkana, Texas, Court of Federal Claims Number 99–0259V
19. Tyler Hartman, Fairfield, Ohio, Court of Federal Claims Number 99–0261V
20. Jessie Mae Williams, San Antonio, Texas, Court of Federal Claims Number 99–0263V
21. Annette Nelson on behalf of Trevian Devante Nelson, Baton Rouge, Louisiana, Court of Federal Claims Number 99–0263V
22. George Guzman, Kirkland, Washington, Court of Federal Claims Number 99–0264V
23. Melissa Silva on behalf of Angelo Silva, Ruidoso, New Mexico, Court of Federal Claims Number 99–0270V
24. Serita L. Smith on behalf of Hunter James Smith, Camp Pendleton, California, Court of Federal Claims Number 99–0271V
25. Elidia Chuatle on behalf of Argenis Herrera, Bronx, New York, Court of Federal Claims Number 99–0278V
26. Martin Brausewetter, Staten Island, New York, Court of Federal Claims Number 99–0278V
27. Kimberly and Thomas Francis on behalf of Victoria Francis, West Chester, Pennsylvania, Court of Federal Claims Number 99–0286V
28. Kelly and John Sanford on behalf of Arden Christina Sanford, West Palm Beach, Florida, Court of Federal Claims Number 99–0287V
29. Carole E. Rudd on behalf of David A. Rudd, Newburyport, Massachusetts, Court of Federal Claims Number 99–0291V
30. Michele and John Jenkins on behalf of Jesse Lee Jenkins, Bedford, Indiana, Court of Federal Claims Number 99–0295V
31. Gerald Doffing, Frederic, Wisconsin, Court of Federal Claims Number 99–0304V
32. Michelle Green on behalf of Chelsey Green, Amarillo, Texas, Court of Federal Claims Number 99–0305V
33. Michael Hroncich on behalf of Brianna Nicole Hroncich, Deceased, Westfield, New Jersey, Court of Federal Claims Number 99–0306V
34. Patricia Rodriguez, Vienna, Virginia, Court of Federal Claims Number 99–0307V
35. Nicole Hamelin-Garcia, Vienna, Virginia, Court of Federal Claims Number 99–0308V
36. Mike Morrill, Vienna, Virginia, Court of Federal Claims Number 99–0309V
37. Onelia Valdes, Vienna, Virginia, Court of Federal Claims Number 99–0310V
38. Jennifer Garland, Indianapolis, Indiana, Court of Federal Claims Number 99–0313V
39. Cary Vhugen and Ellen Hermanns on behalf of Erik H. Vhugen, Santa Monica, California, Court of Federal Claims Number 99–0314V
40. Dorothy Werderitsh, Indianapolis, Indiana, Court of Federal Claims Number 99–0319V
41. Debra May, Indianapolis, Indiana, Court of Federal Claims Number 99–0320V
42. Betty Fluck, Indianapolis, Indiana, Court of Federal claims Number 99–0321V
43. Diana and Kerry D. Smith on behalf of Michael Randall Smith, Miami, Florida, Court of Federal Claims Number 99–0325V
44. Courtney M. Lambert, Aliquippa, Pennsylvania, Court of Federal Claims Number 99–0327V
45. Judy Saari, Vienna, Virginia, Court of Federal Claims Number 99–0328V
46. Monique Kanadanian, Vienna, Virginia, Court of Federal Claims Number 99–0329V
47. Kristen Jennings on behalf of Dylan Jennings, Vienna, Virginia, Court of Federal Claims Number 99–0330V
48. Kim and Kenneth Smith on behalf of Bridget Smith, Edina, Minnesota, Court of Federal Claims Number 99–0331V
49. Laura Lichoff, Columbus, Ohio, Court of Federal Claims Number 99–0332V
50. Kelly and Ruben Lujan on behalf of Dominic A. Lujan, Las Vegas, Nevada, Court of Federal Claims Number 99–0333V
51. Sharon and Robert Tersen on behalf of Gregory Tersen, Fort Myers, Florida, Court of Federal Claims Number 99–0341V
52. Deborah Burns, Fort Worth, Texas, Court of Federal Claims Number 99–0353V
53. Debbie Kaye Hunt, Vienna, Virginia, Court of Federal Claims Number 99–0356V
54. Carla and Parke Gramm on behalf of Parke Gramm, Irvington, New Jersey, Court of Federal Claims Number 99–0359V
55. Sue and Stuart Carter on behalf of Corey Carter, Vienna, Virginia, Court of Federal Claims Number 99–0362V
56. Tamra and Curtis Poll on behalf of Nathan Curtis Poll, Ogden, Utah, Court of Federal Claims Number 99–0371V
57. Patricia and Brian Strickland on behalf of Justin Brian Strickland, Deceased, Laurel, Mississippi Court of Federal claims Number 99–0374V
58. Linda and Larrie Collura on behalf of Larrie S. Collura, North Brunswick, New Jersey, Court of Federal Claims Number 99–0377V
59. Joanne Griffin, Vienna, Virginia, Court of Federal Claims Number 99–0378V
60. Sharon Durham, Vienna, Virginia, Court of Federal Claims Number 99–0379V
61. Kari Andersen, Vienna, Virginia, Court of Federal Claims Number 99–0380V
62. Pat Gerard, Vienna, Virginia, Court of Federal Claims Number 99–0381V
63. Quinton O. Riggins, Jr., Vienna, Virginia, Court of Federal Claims Number 99–0382V

64. Tammie and Thomas Houston on behalf of Thomas Matthew Houston, Higginsville, Missouri, Court of Federal Claims Number 99–0391V
65. Anna Nicolas on behalf of Nathaniel Nicolas, Beach Haven, New Jersey, Court of Federal Claims Number 99–0393V
66. Amy and Dennis Ostermeier on behalf of Katelyn Ostermeier, Grand Forks, North Dakota, Court of Federal Claims Number 99–0394V
67. Natalie and David Hay on behalf of Trevor Hay, Orlando, Florida, Court of Federal Claims Number 99–0398V
68. Dorothy and Hugh Benson on behalf of Shekinah Benson, Boston, Massachusetts, Court of Federal Claims Number 99–0399V
69. Rebecca S. Baker, Indianapolis, Indiana, Court of Federal Claims Number 99–0404V
70. Janet and Gregory Brooks on behalf of Kelly Brooks, Henrietta, New York, Court of Federal Claims Number 99–0405V
71. Nathan House, Vienna, Virginia, Court of Federal Claims Number 99–0406V
72. Linda and Joseph Goss on behalf of Jessica Goss, Vienna, Virginia, Court of Federal Claims Number 99–0407V
73. Lori Barillaro, Vienna, Virginia, Court of Federal Claims Number 99–0408V
74. Cheryl and Rick Butcher on behalf of Taylor Butcher, Deceased, Vienna, Virginia, Court of Federal Claims Number 99–0409V
75. Sue Cruz, Vienna, Virginia, Court of Federal Claims Number 99–0410V
76. Cheryl A. Castagna, Vienna, Virginia, Court of Federal Claims Number 99–0411V
77. Sonya and David Morris on behalf of Taylor Morris, Vienna, Virginia, Court of Federal Claims Number 99–0412V
78. Gordon F. McCammon, Vienna, Virginia, Court of Federal Claims Number 99–0423V
79. Jill Anne Stiefel, Vienna, Virginia, Court of Federal Claims Number 99–0424V
80. Linda Lenahan, Vienna, Virginia, Court of Federal Claims Number 99–0425V
81. Susan Kreider, Vienna, Virginia, Court of Federal Claims Number 99–0426V
82. Sarah Ann Willie, Vienna, Virginia, Court of Federal Claims Number 99–0427V
83. Barbara-Jean Cramer, Vienna, Virginia, Court of Federal Claims Number 99–0428V
84. Matthew Z. Larive, Vienna, Virginia, Court of Federal Claims Number 99–0429V
85. Ronnie D. Sanders, Sr., Vienna, Virginia, Court of Federal Claims Number 99–0430V
86. Rebecca S. McCauley, Vienna, Virginia, Court of Federal Claims Number 99–0431V
87. Jacinda S. Fisher, Vienna, Virginia, Court of Federal Claims Number 99–0432V
88. Deborah Diana Butler, Vienna, Virginia, Court of Federal Claims Number 99–0433V
89. Dana Imlay on behalf of Breanna Barber, Vienna, Virginia, Court of Federal Claims Number 99–0434V
90. Stephanie Phippen, Vienna, Virginia, Court of Federal Claims Number 99–0435V
91. Bonnie and Jamie Thompson on behalf of Katherine A. Thompson, Vienna, Virginia, Court of Federal Claims Number 99–0436V
92. Shawn and John Klorczyk on behalf of Zachary Klorczyk, Vienna, Virginia, Court of Federal Claims Number 99–0437V
93. Jodi Lynn Kabat, Vienna, Virginia, Court of Federal Claims Number 99–0438V
94. Jane and Gregory Westfall on behalf of Luke Westfall, Vienna, Virginia, Court of Federal Claims Number 99–0439V
95. Rosemary and Francis Adelizzi on behalf of Francis Matthew Adelizzi, III, Cape May, New Jersey, Court of Federal Claims Number 99–0444V
96. Sharon Johnson on behalf of Kari Johnson, Vienna, Virginia, Court of Federal Claims Number 99–0450V
97. Kimberly Gabbard, Vienna, Virginia, Court of Federal Claims Number 99–0451V
98. Sheldon D. Wexler, Vienna, Virginia, Court of Federal Claims Number 99–0452V
99. Pedora and Jack Sexton on behalf of Nicholas Zachary Sexton, Deceased, Vienna, Virginia, Court of Federal Claims Number 99–0453V
100. Vili Kraljevic, Vienna, Virginia, Court of Federal Claims Number 99–0454V
101. Stacey and Carl Duncan on behalf of Carly Iris Duncan, Vienna, Virginia, Court of Federal Claims Number 99–0455V
102. Rosita Belone and Terry Singer on behalf of Summer K. Belone, Winslow, Arizona, Court of Federal Claims Number 99–0457V
103. Jose Guerrero, Dallas, Texas, Court of Federal Claims Number 99–0458V
104. Rachel Sting, Mobridge, South Dakota, Court of Federal Claims Number 99–0459V
105. Debbie Silver, Vienna, Virginia, Court of Federal Claims Number 99–0462V 21
106. Timothy James Carpenter, Vienna, Virginia, Court of Federal Claims Number 99–0463V
107. Candace Marie Kort, Vienna, Virginia, Court of Federal Claims Number 99–0464V
108. Timothy James Carpenter, II, Vienna, Virginia, Court of Federal Claims Number 99–0465V
109. Harvey Gruber, Vienna, Virginia, Court of Federal Claims Number 99–0466V
110. Charlene Pagac on behalf of Lucas Paul Pagac, Vienna, Virginia, Court of Federal Claims Number 99–0467V
111. Charlene Pagac on behalf of Isaak Alvin Pagac, Vienna, Virginia, Court of Federal Claims Number 99–0468V
112. Jennifer L. Ziegler, Vienna, Virginia, Court of Federal Claims Number 99–0469V
113. Kimberly Dixon on behalf of Dymetria Knight, Vienna, Virginia, Court of Federal Claims Number 99–0470V
114. Sandra and Castro Juncal on behalf of Natasha Juncal, North Miami, Florida, Court of Federal Claims Number 99–0475V
115. Teresa Ann Helton on behalf of Ashley Elizabeth Ransom, Deceased, Austell, Georgia, Court of Federal Claims Number 99–0478V
116. Nancy Gardner-Cook, Lancaster, Pennsylvania, Court of Federal Claims Number 99–0480V
117. Amber Borin on behalf of Trey Borin, Cincinnati, Ohio, Court of Federal Claims Number 99–0491V
118. Alina Cusati on behalf of Eric Fernandez, Bronx, New York, Court of Federal Claims Number 99–0492V
119. Laili Aly on behalf of Shadi Wadie, Vienna, Virginia, Court of Federal Claims Number 99–0493V
120. Maryann and Michael Zezulak on behalf of Michael Scott Zezulak, Jr, Vienna, Virginia, Court of Federal Claims Number 99–0494V
121. Tammy Carrington on behalf of Jonathan Carrington, Vienna, Virginia, Court of Federal Claims Number 99–0495V
122. Debi and Howard Kaplan on behalf of Ashley Elysa Kaplan, Vienna, Virginia, Court of Federal Claims Number 99–0496V
123. Richard Abbott, Sr. on behalf of Richard Abbott, Jr., Vienna, Virginia, Court of Federal Claims Number 99–0497V
124. Jaime Dejesus Rezzonico, Vienna, Virginia, Court of Federal Claims Number 99–0498V
125. Laurie Vidaver, Vienna, Virginia, Court of Federal Claims Number 99–0499V
126. Jay Nussman, Vienna, Virginia, Court of Federal Claims. Number 99–0500V

127. Laura L. Cosby, Vienna, Virginia, Court of Federal Claims Number 99–0501V
128. Julianna Hodgman, Vienna, Virginia, Court of Federal Claims Number 99–0502V
129. Leslie J. Klauss, Vienna, Virginia, Court of Federal Claims Number 99–0503V
130. Janet and Ronald Allen on behalf of Ronald Allen, III, Vienna, Virginia, Court of Federal Claims Number 99–0504V
131. Barbara and Roland Stipe on behalf of Landon Cole Stipe, Vienna, Virginia, Court of Federal Claims Number 99–0505V
133. Theresa and Frank Picciotti on behalf of Frank C. Picciotti, Vienna, Virginia, Court of Federal Claims Number 99–0506V
133. Anthony Lamberti, Vienna, Virginia, Court of Federal Claims Number 99–0507V
134. Kenneth Teknus on behalf of Paul Michael Teknus, Port Charlotte, Florida, Court of Federal Claims Number 99–0508V
135. Karen and Michael Hochniuk on behalf of Heather Hochniuk, Vienna, Virginia, Court of Federal Claims Number 99–0509V
136. Barbara Davis, Vienna, Virginia, Court of Federal Claims Number 99–0510V
137. Traci McGowan on behalf of Alexander W. McGowan, Bethesda, Maryland, Court of Federal Claims Number 99–0511V
138. Hong (Heather) Tabatchnick on behalf of Nina H. Tabatchnick, Vienna, Virginia, Court of Federal Claims Number 99–0512V
139. Kathy and Richard Richards on behalf of David William Richards, Deceased, Vienna, Virginia, Court of Federal Claims Number 99–0517V
140. Carol Clemens, Vienna, Virginia, Court of Federal Claims Number 99–0518V
141. Anne E. Oftenweller, Vienna, Virginia, Court of Federal Claims Number 99–0519V
142. Deborah Van Burch on behalf of Khadija Aaliyah Francis, Vienna, Virginia, Court of Federal Claims Number 99–0520V
143. Sanford H. Alper, Vienna, Virginia, Court of Federal Claims Number 99–0521V
144. Christina and Kenneth Robinson on behalf of Kenneth Robinson, Vienna, Virginia, Court of Federal Claims Number 99–0522V
145. Cheryl Lombardi, Vienna, Virginia, Court of Federal Claims Number 99–0523V
146. Eva and Daniel Ricci on behalf of Thomas Walter Ricci, Downers Grove, Illinois, Court of Federal Claims Number 99–0524V
147. Robert Lasch, Vienna, Virginia, Court of Federal Claims Number 99–0525V
148. Laura Cannizzario, Boca Raton, Florida, Court of Federal Claims Number 99–0526V
149. Paige Howard on behalf of Hayden Howard, Austin, Texas, Court of Federal Claims Number 99–0527V
150. Reginald Hailey, Waldwick, New Jersey, Court of Federal Claims Number 99–0532V
151. Casey Hocraffer, Eagle Grove, Iowa, Court of Federal Claims Number 99–0533V
152. Julie Mulac on behalf of Marco Torres, Youngstown, Ohio, Court of Federal Claims Number 99–0534V
153. Laura Elizabeth Turpin, Vienna, Virginia, Court of Federal Claims Number 99–0535V
154. Jennifer Villasenor, Vienna, Virginia, Court of Federal Claims Number 99–0536V
155. Laura Savin on behalf of Bruce Thomas Savin, Vienna, Virginia, Court of Federal Claims Number 99–0537V
156. Martha and Bill Noel on behalf of Rachel Anne Noel, Vienna, Virginia, Court of Federal Claims Number 99–0538V
157. Myra and Richard Brown on behalf of Laura Brown, Vienna, Virginia, Court of Federal Claims Number 99–0539V
158. Karen Davis, Vienna, Virginia, Court of Federal Claims Number 99–0540V
159. Lynn Miller, Vienna, Virginia, Court of Federal Claims Number 99–0541V
160. Adael Shinn on behalf of Paul Stami, Vienna, Virginia, Court of Federal Claims Number 99–0542V
161. Nancy Turner on behalf of Natalie Turner, Vienna, Virginia, Court of Federal Claims Number 99–0543V
162. Nancy Turner on behalf of Brandon Turner, Vienna, Virginia, Court of Federal Claims Number 99–0544V
163. Barbara Murray, Vienna, Virginia, Court of Federal Claims Number 99–0545V
164. Donald Simmons, Pascagoula, Mississippi, Court of Federal Claims Number 99–0546V
165. Karen and Manfred Glaeser on behalf of Katie Glaeser, South Elgin, Illinois, Court of Federal Claims Number 99–0548V
166. Elvin J. Looney, Bakersfield, California, Court of Federal Claims Number 99–0549V
167. Jeffrey F. Miller, Baltimore, Maryland, Court of Federal Claims Number 99–0551V
168. Elizabeth Shapiro, Baltimore, Maryland, Court of Federal Claims Number 99–0552V
169. Alan P. Emmendorfer on behalf of Michael J. Emmendorfer, Baltimore, Maryland, Court of Federal Claims Number 99–0553V
170. Janet Pfistrer and Christopher Cole on behalf of Caroline Isabel Cole, Fort Collins, Colorado, Court of Federal Claims Number 99–0554V
171. Sherri A. Ballam, Canandaigua, New York, Court of Federal Claims Number 99–0555V
172. Carl Loizzi on behalf of Michael Loizzi, Sylmar, California, Court of Federal Claims Number 99–0559V
173. Sharon L. McLenon, Grosse Ile, Michigan, Court of Federal Claims Number 99–560V
174. Joyce Diane Keenan, Jacksonville, Florida, Court of Federal Claims Number 99–0561V
175. Laurie Perrin, Stephentown, New York, Court of Federal Claims Number 99–0562V
176. Mary Silva on behalf of Carmen M. Silva, Lighthouse Point, Florida, Court of Federal Claims Number 99–0563V
177. Laura Turpin on behalf of Conor Allen Turpin, Falls Church, Virginia, Court of Federal Claims Number 99–0564V
178. Robin Button on behalf of Jamie P. Button, Hudson, Ohio, Court of Federal Claims Number 99–0565V
179. Barbara A. Smith, St. Louis, Missouri, Court of Federal Claims Number 99–0568V
180. Marilyn L. Wheatley on behalf of Deneka Noelani Wheatley, Moreno Valley, California, Court of Federal Claims Number 99–0569V
181. Anthony Kent on behalf of Anthony Gordon Kent, II, San Jose, California, Court of Federal Claims Number 99–0570V
182. Joanna H. Rydzewski, Seffner, Florida, Court of Federal Claims Number 99–0571V
183. John Theadore Weber on behalf of John Thomas Weber, Northport, New York, Court of Federal Claims Number 99–0572V
184. James Perrodin, Pearland, Texas, Court of Federal Claims Number 99–0573V
185. Mai and William Herbison on behalf of David Francis Herbison, Deceased, Secaucus, New Jersey, Court of Federal Claims Number 99–0574V
186. Tonya and Gerald Nelson on behalf of Abigail Nelson, Deceased, Vienna, Virginia, Court of Federal Claims Number 99–0575V
187. Judith and Christopher Converse on behalf of Benjamin Peter Converse,

Vienna, Virginia, Court of Federal Claims Number 99–0576V
188. Charlotte A. Mann, Vienna, Virginia, Court of Federal Claims Number 99–0577V
189. Joseph Michael D'Angioloni, Vienna, Virginia, Court of Federal Claims Number 99–0578V
190. Shari Sand on behalf of Andrew Joseph Sand, Vienna, Virginia, Court of Federal Claims Number 99–0579V
191. Diane M. Sohn, Vienna, Virginia, Court of Federal Claims Number 99–0580V
192. Maura J. Fisk on behalf of Jonathan M. Fisk, Vienna, Virginia, Court of Federal Claims Number 99–0581V
193. Nancy and Wayne Fitzpatrick on behalf of Thomas W. Fitzpatrick, Vienna Virginia, Court of Federal Claims Number 99–0582V
194. Tyeka Lamar on behalf of Donnovan Lamar, Vienna, Virginia, Court of Federal Claims Number 99–0583V
195. Tyeka Lamar on behalf of Desmond Lamar, Vienna, Virginia, Court of Federal Claims Number 99–0584V
196. Janine West on behalf of David West, Vienna, Virginia, Court of Federal Claims Number 99–0585V
197. Lee Ann Cherpak on behalf of Christine E. Cherpak, Vienna, Virginia, Court of Federal Claims Number 99–0586V
198. Diane Adams on behalf of Sonic Rehrig, Vienna, Virginia, Court of Federal Claims Number 99–0587V
199. Summer Erin Densmore, Vienna, Virginia, Court of Federal Claims Number 99–0588V
200. Diane Locane on behalf of Jennifer Locane, Vienna, Virginia, Court of Federal Claims Number 99–0589V
201. Marianne Fraschilla, Vienna, Virginia, Court of Federal Claims Number 99–0590V
202. Ann Marie Ryman, Boston, Massachusetts, Court of Federal Claims Number 99–0591
203. Eileen Schwankl, Boston, Massachusetts, Court of Federal Claims Number 99–0592V
204. Ralph Sizemore on behalf of Amanda Sizemore, Boston, Massachusetts, Court of Federal Claims Number 99–0593V
205. Jane Stevens, Boston, Massachusetts, Court of Federal Claims Number 99–0594V
206. Elizabeth Topp on behalf of Robert Topp, Boston, Massachusetts, Court of Federal Claims Number 99–0595V
207. Charlene Vanluvender on behalf of Amber Vanluvender, Boston, Massachusetts, Court of Federal Claims Number 99–0596V
208. Mary Vaughn, Boston, Massachusetts, Court of Federal Claims Number 99–0597V
209. Kathy Vernier, Boston, Massachusetts, Court of Federal Claims Number 99–0598V
210. Sara Vogel, Boston, Massachusetts, Court of Federal Claims Number 99–0599V
211. Angelia Wile on behalf of Cailin Wile, Boston, Massachusetts, Court of Federal Claims Number 99–0600V
212. James Youngblood, Boston, Massachusetts, Court of Federal Claims Number 99–0601V
213. Nicole Washam on behalf of Baylie Washam, Deceased, Boston, Massachusetts, Court of Federal Claims Number 99–0602V
214. Priya Parmar, Boston, Massachusetts, Court of Federal Claims Number 99–0603V
215. Josie and James Powell on behalf of Emma Powell, Boston, Massachusetts, Court of Federal Claims Number 99–0604V
216. Susan Flynn on behalf of Anthony Flynn, Boston, Massachusetts, Court of Federal Claims Number 99–0605V
217. Linda Leva, Boston, Massachusetts Court of Federal Claims Number 99–0606V
218. Benedict Nkeng, Boston, Massachusetts, Court of Federal Claims Number 99–0607V
219. Harilyn Adler, Boston, Massachusetts, Court of Federal Claims Number 99–0608V
220. Vera Analla, Boston, Massachusetts, Court of Federal Claims Number 99–0609V
221. Loreen Artz, Boston, Massachusetts, Court of Federal Claims Number 99–0610V
222. Walter Augustynski, Boston, Massachusetts, Court of Federal Claims Number 99–0611V
223. Karen Batignani, Boston, Massachusetts, Court of Federal Claims Number 99–0612V
224. Teresa Boschee, Boston, Massachusetts, Court of Federal Claims Number 99–0613V
225. Raymond Bulman, Boston, Massachusetts, Court of Federal Claims Number 99–0614V
226. Kimberly Camerlin on behalf of Alexander Camerlin, Boston, Massachusetts, Court of Federal Claims Number 99–0615V
227. David Clark, Boston, Massachusetts, Court of Federal Claims Number 99–0616V
228. Cheryl Eichelkraut, Boston, Massachusetts, Court of Federal Claims Number 99–0617V
229. David Eklund, Boston, Massachusetts, Court of Federal Claims Number 99–0618V
230. Aly and Faten El-Kadi on behalf of Enjy El-Kadi, Boston, Massachusetts, Court of Federal Claims Number 99–0619V
231. Shereen El-Kadi, Boston, Massachusetts, Court of Federal Claims Number 99–0620V
232. Kristine Goodwin, Boston, Massachusetts, Court of Federal Claims Number 99–0621V
233. Lynn Herklots, Boston, Massachusetts, Court of Federal Claims Number 99–0622V
234. Glen Kerkovich, Boston, Massachusetts, Court of Federal Claims Number 99–0623V
235. Teri Kincaid on behalf of Lisa Kincaid, Boston, Massachusetts, Court of Federal Claims Number 99–0624V
236. Cathy and Jeffrey Kolakowski on behalf of Thomas Kolakowski, Deceased, Boston, Massachusetts, Court of Federal Claims Number 99–0625V
237. Lorraine LeBlanc, Boston, Massachusetts, Court of Federal Claims Number 99–0626V
238. Adam Lipsky, Boston, Massachusetts, Court of Federal Claims Number 99–0627V
239. Nancy Manvillin, Boston, Massachusetts, Court of Federal Claims Number 99–0628V
240. Brenda McMillin, Boston, Massachusetts, Court of Federal Claims Number 99–0629V
241. James Musarra on behalf of Franklin Musarra, Boston, Massachusetts, Court of Federal Claims Number 99–0630V
242. David Myers, Boston, Massachusetts, Court of Federal Claims Number 99–0631V
243. Elizabeth Fleming, Boston, Massachusetts, Court of Federal Claims Number 99–0632V
244. Robinette Giacolo, Boston, Massachusetts, Court of Federal Claims Number 99–0633V
245. Julienne Jack on behalf of Brandon Jack, Deceased, Boston, Massachusetts, Court of Federal Claims Number 99–0634V
246. Tammy Oppy, Boston, Massachusetts, Court of Federal Claims Number 99–0635V
247. John Owen, Jr., Boston, Massachusetts, Court of Federal Claims Number 99–0636V
248. Patricia Petet, Boston, Massachusetts, Court of Federal Claims Number 99–0637V
249. Justin Peugh, Boston, Massachusetts, Court of Federal Claims Number 99–0638V
250. Mona Porter, Boston, Massachusetts, Court of Federal Claims Number 99–0639V
251. Kathy and David Radosh on behalf of Tyler Radosh, Boston, Massachusetts, Court of Federal Claims Number 99–0640V
252. Lindsay Rand and Susan Braus on behalf of Emily Rand, Boston,

Massachusetts, Court of Federal Claims Number 99–0641V
253. Linda Reyes on behalf of Anthony R. Reyes, Boston, Massachusetts, Court of Federal Claims Number 99–0642V
254. Gregory Riddick, Boston, Massachusetts, Court of Federal Claims Number 99–0643V
255. Claudia J. Rotoli, Boston, Massachusetts, Court of Federal Claims Number 99–0644V
256. Caren Rubin, Boston, Massachusetts, Court of Federal Claims Number 99–0645V
257. Christopher Wiley, Baton Rouge, Louisiana, Court of Federal Claims Number 99–0646V
258. Martha Durham on behalf of Eliza Collier Durham, Vienna, Virginia, Court of Federal Claims Number 99–0648V
259. Ryan James Szekeres, Vienna, Virginia, Court of Federal Claims Number 99–0649V
260. Laurene Owen, Vienna, Virginia, Court of Federal Claims Number 99–0650V
261. Donna Guillory, Kenner, Louisiana, Court of Federal Claims Number 99–0651V
262. Simba Bakara on behalf of Aisha Bakara, Columbus, Ohio, Court of Federal Claims Number 99–0652V
263. Joanne Baker on behalf of Jonathan Baker, New York, New York, Court of Federal Claims Number 99–0653V
264. Kathryn and Peter Bordonaro on behalf of Michael Bordonaro, Boston, Massachusetts, Court of Federal Claims Number 99–0654V
265. Barbara and John Gilchrist on behalf of Joseph Gilchrist, Deceased, Boston, Massachusetts, Court of Federal Claims Number 99–0655V
266. Fidel Gonzales on behalf of Jacob Gonzales, Boston, Massachusetts, Court of Federal Claims Number 99–0656V
267. Juan Lopez and Elizabeth Birt on behalf of John Matthew Lopez, Boston, Massachusetts, Court of Federal Claims Number 99–0657V
268. Megan Theard, Boston, Massachusetts, Court of Federal Claims Number 99–0658V
269. Rhea Rolsten, Columbus, Ohio, Court of Federal Claims Number 99–0659V
270. Colleen Elizabeth Torbett, Bellevue, Kentucky, Court of Federal Claims Number 99–0660V
271. Renee Eyerman, Dallas, Pennsylvania, Court of Federal Claims Number 99–0661V
272. Craig D. Nicks on behalf of Charles Joffre Bouchard Nicks, Portage, Michigan, Court of Federal Claims Number 99–0662V
273. Craig D. Nicks on behalf of Aidan Nicks, Portage, Michigan, Court of Federal Claims Number 99–0663V
274. Sara and Joseph Barbeau on behalf of Amy Renee Barbeau, Chesterfield, Missouri, Court of Federal Claims Number 99–0664V
275. Winfred Christian, Miami, Florida, Court of Federal Claims Number 99–0665V
276. Lori Meyers, Kalispell, Montana, Court of Federal Claims Number 99–0666V
277. Patricia and James Musarra on behalf of Franklin Musarra, Miami, Florida, Court of Federal Claims Number 99–0667V
278. Tracy Charleville, Baton Rouge, Louisiana, Court of Federal Claims Number 99–0668V
279. Jacqueline and Rob Sharkey on behalf of Ryna Reid Sharkey, Fort Myers, Florida, Court of Federal Claims Number 99–0669V
280. Eric Jeffries, Cincinnati, Ohio, Court of Federal Claims Number 99–0670V
281. Lester Thornton, Tampa, Florida, Court of Federal Claims Number 99–0671V
282. Danielle Sarkine on behalf of Alexandra Logan Sarkine, Indianapolis, Indiana, Court of Federal Claims Number 99–0672V
283. Danielle Sarkine on behalf of Christian Sarkine, Indianapolis, Indiana, Court of Federal Claims Number 99–0673V
284. Shari and Patrick Sanders on behalf of Jake Sanders, Bismarck, North Dakota, Court of Federal Claims Number 99–0674V
285. James Brooks on behalf of Sean Austin Brooks, Deceased,Boston, Massachusetts, Court of Federal Claims Number 99–0675V
286. Clark Bury, Boston, Massachusetts, Court of Federal Claims Number 99–0676V
287. Christy Mitchell, Boston, Massachusetts, Court of Federal Claims Number 99–0677V
288. Robin and John Nesslage on behalf of Hannah Nesslage, Boston, Massachusetts, Court of Federal Claims Number 99–0678V
289. Ellen and James O'Brien on behalf Kevin O'Brien, Boston, Massachusetts, Court of Federal Claims Number 99–0679V
290. Leslie Yost-Schomer on behalf of Weston Daniel Schomer, Vienna, Virginia, Court of Federal Claims Number 99–0680V
291. Ronald Warren Edmunds of behalf of Ronald Christopher Edmunds, Vienna, Virginia, Court of Federal Claims Number 99–0681V
292. Janet Asbury on behalf of Amanda Asbury, Vienna, Virginia, Court of Federal Claims Number 99–0682V
293. Hoke Brock Hamrick, Vienna, Virginia, Court of Federal Claims Number 99–0683V
294. Gloria Lee McNett, Vienna, Virginia, Court of Federal Claims Number 99–0684V
295. Cynthia Gwinn on behalf of Samantha Gwinn, Vienna, Virginia, Court of Federal Claims Number 99–0685V
296. Annette and Wayne Bennett on behalf of Riley Bennett, Boston, Massachusetts, Court of Federal Claims Number 99–0686V
297. Margaret Wolpo on behalf of Maximllan Wolpo, Boston, Massachusetts, Court of Federal Claims Number 99–0687V
298. Ann and Robert Edge on behalf of Robert Bruce Edge, II, Orlando, Florida, Court of Federal Claims Number 99–0692V
299. Fia and Phillip Richmond on behalf of Palmer Richmond, Santa Barbara, California, Court of Federal Claims Number 99–0693V
300. Daniel Melbourne, Vienna, Virginia, Court of Federal Claims Number 99–0694V
301. Kathy Minet on behalf of Andrew Michael Minet, Poughkeepsie, New York, Court of Federal Claims Number 99–0695V
302. Timothy R. Laurain on behalf of Paige E. Laurain, Riverview, Michigan, Court of Federal Claims Number 99–0696V
303. Donald R. Masias, Denver, Colorado, Court of Federal Claims Number 99–0697V
304. Joseph Michael D'Angiolini, Barto, Pennsylvania, Court of Federal Claims Number 99–0698V
305. Wilbur Fletcher on behalf of Rachel Fletcher, La Mesa, California, Court of Federal Claims Number 99–0708V
306. Robin Grewe on behalf of Diane Grewe, Houston, Texas, Court of Federal Claims Number 99–0709V
307. Cheryl and Kenneth Dennison on behalf of Jacob Dennison, St. Louis, Missouri, Court of Federal Claims Number 99–0710V
308. Lowenda and Joel Towe on behalf of Hannah Michelle Towe, Virginia Beach, Virginia, Court of Federal Claims Number 99–0711V
309. Maureen Woods on behalf of Antoinne Nelson, Salina, Kansas, Court of Federal Claims Number 99–0720V
310. Mattie Gatlin on behalf of Billy Edward Gatlin, Deceased, Dallas, Texas, Court of Federal Claims Number 99–0723V
311. Denise Jean Shirley on behalf of Destiny Ann Shirley, Clintwood,

Virginia, Court of Federal Claims Number 99–0730V
312. Jorge and Bonnie Correa on behalf of Danielle R. Correa, Glens Falls, New York, Court of Federal Claims Number 99–0736V
313. Anita Y. Oplotnik on behalf of Kristen L. Oplotnik, Springfield, Missouri, Court of Federal Claims Number 99–0739V
314. Cara Byriel, Boone, Iowa, Court of Federal Claims Number 99–0741V
315. Tanzee and Scott Kallas on behalf of Shelby J. Kallas, Evanston, Wyoming, Court of Federal Claims Number 99–0743V
316. Cathryn Lutitia Gardiner, Lake Worth, Texas, Court of Federal Claims Number 99–0745V
317. Rosezella and Steve Gorby on behalf of Danielle Lucille Gorby, Indianapolis, Indiana, Court of Federal Claims Number 99–0748V
318. Georgia Marks on behalf of Brandon D. James, Houston, Texas, Court of Federal Claims Number 99–0761V
319. Jean Kefalidis on behalf of Eleni Kefalidis, Simpsonville, South Carolina, Court of Federal Claims Number 99–0772V
320. Andrea Rupert on behalf of Holden Rupert, Boston, Massachusetts, Court of Federal Claims Number 99–0774V
321. Christopher J. Priest and Rebecca A. Soden on behalf of Christopher I. Priest, Camden, New Jersey, Court of Federal Claims Number 99–0776V
322. Margaret Messeri on behalf of Julianna Messeri, Boston, Massachusetts, Court of Federal Claims Number 99–0777V
323. Leroy Stacy, Springfield, Massachusetts, Court of Federal Claims Number 99–0779V
324. Phyllis A. Fenstermacher, Allentown, Pennsylvania, Court of Federal Claims Number 99–0786V
325. Nelda Limon and Vincent Vaquera on behalf of Miranda Limon, Houston, Texas, Court of Federal Claims Number 99–0787V

March 21, 2000.

Claude Earl Fox,

Administrator.

[FR Doc. 00–8480 Filed 4–5–00; 8:45 am]

BILLING CODE 4160–15–P

DEPARTMENT OF HEALTH AND HUMAN SERVICES

Indian Health Service

Request for Public Comment: 60-Day Proposed Information Collection: Indian Health Service Customer Satisfaction Survey

SUMMARY: In compliance with section 3506(c)(2)(A) of the Paperwork Reduction Act of 1995, to provide a 60-day advance opportunity for public comment on proposed information collection projects, the Indian Health Service (IHS) is publishing for comment a summary of a proposed information collection to be submitted to the Office of Management and Budget (OMB) for review.

Proposed Collection

Title: ''Indian Health Service Customer Satisfaction Survey.''

Type of Information Collection Request: New collection.

Form Number: None.

Need and Use of the Information Collection: Executive Order 12862, ''Setting Customer Service Standards'' directs agencies ''that provide significant services directly to the public'' to ''survey customers to determine the kind and quality of services they want and their level of satisfaction with existing services.'' The proposed customer satisfaction survey is designed to assess the level of customer (patient) satisfaction with the services provided at IHS-operated health care facilities. Voluntary customer service surveys will be conducted at IHS-operated health care facilities. The information gathered will be used by agency management and staff to identify strengths and weakenesses in current service provision, to plan and redirect resources, to make improvements that are practical and feasible and, to provide vital feedback to local health officials, health boards, and community members regarding customer satisfaction or dissatisfaction with the health care and related services being provided.

Affected Public: Individuals.

Type of Respondents: Individuals.

See Table 1 below for type of data collection instrument, estimated number of respondents, number of responses per respondent, average burden hour per response, and total annual burden hour.

TABLE 1

Data collection instrument	Estimated Number of respondents	Responses per respondent	Average burden hour per response [1]	Total annual burden hrs
Customer Satisfaction Survey	7500	1	[2] 0.25	1875.0
Total	7500	1		1875.0

[1] For ease of understanding, burden hours are also provided in actual minutes.
[2] 15 minutes.

There are no Capital Costs, Operating Costs and/or Maintenance Costs to report for this information collection.

Request for Comments

Your written comments and/or suggestions are invited on one or more of the following points: (a) Whether the information collection activity is necessary to carry out an agency function; (b) whether the agency processes the information collected in a useful and timely fashion; (c) the accuracy of public burden estimate (the estimated amount of time needed for individual respondents to provide the requested information); (d) whether the methodology and assumptions used to determine the estimate are logical; (e) ways to enhance the quality, utility, and clarity of the information being collected; and (f) ways to minimize the public burden through the use of automated, electronic, mechanical, or other technological collection techniques or other forms of information technology.

Send Comments and Requests For Further Information: Send your written comments, requests for more information on the proposed collection or requests to obtain a copy of the data collection instrument(s) and instructions to: Mr. Lance Hodahkwen, Sr., M.P.H., IHS Reports Clearance Officer, 12300 Twinbrook Parkway, Suite 450, Rockville, MD 20852. 1601, call non-toll free (301) 443–5938; send via facsimile to (301) 443–1522, or send your e-mail requests, comments, and

return address to: lhodahkw@hqe.ihs.gov.

Comment Due Date: Your comments regarding this information collection are best assured of having their full effect if received on or before June 5, 2000.

Dated: March 28, 2000.

Michael E. Lincoln,

Acting Director.

[FR Doc. 00–8398 Filed 4–5–00; 8:45 am]

BILLING CODE 4160–16–M

DEPARTMENT OF THE INTERIOR

Fish and Wildlife Service

Notice of Availability of an Environmental Assessment/Habitat Conservation Plan and Receipt of an Application for a Permit for the Incidental Take of the Houston Toad (*Bufo houstonensis*) During Construction of One Single Family Residence on 0.5 Acres of the 4.55 Acres of Adjacent Lots 27 and 28 of the Pine Forest Subdivision, Unit 9, Block 2 and Lots 562 and 564 in the Tahitian Village Subdivision, Unit 2, Block 5, Bastrop County, TX

SUMMARY: Ray Don Tilley (Applicant) has applied to the U.S. Fish and Wildlife Service (Service) for an incidental take permit pursuant to Section 10(a) of the Endangered Species Act (Act). The Applicant has been assigned permit number TE–023965–0. The requested permit, which is for a period of 5 years, would authorize the incidental take of the endangered Houston toad (*Bufo houstonensis*). The proposed take would occur as a result of the construction and occupation of one single family residence on 0.5 acres of the 4.55 acres of adjacent Lots 27 and 28 of the Pine Forest Subdivision, Unit 9, Block 2 and Lots 562 and 564 of the Tahitian Village Subdivision, Unit 2, Block 5, Bastrop County, Texas.

The Service has prepared the Environmental Assessment/Habitat Conservation Plan (EA/HCP) for the incidental take application. A determination of jeopardy to the species or a Finding of No Significant Impact (FONSI) will not be made until at least 30 days from the date of publication of this notice. This notice is provided pursuant to Section 10(c) of the Act and National Environmental Policy Act regulations (40 CFR 1506.6).

DATES: Written comments on the application should be received on or before May 8, 2000.

ADDRESSES: Persons wishing to review the application may obtain a copy by writing to the Regional Director, U.S. Fish and Wildlife Service, P.O. Box 1306, Albuquerque, New Mexico 87103. Persons wishing to review the EA/HCP may obtain a copy by contacting Scott Rowin, Ecological Services Field Office, 10711 Burnet Road, Suite 200, Austin, Texas 78758 (512/490–0063). Documents will be available for public inspection by written request, by appointment only, during normal business hours (8 to 4:30) at the U.S. Fish and Wildlife Service, Austin, Texas. Written data or comments concerning the application and EA/HCP should be submitted to the Field Supervisor, Ecological Services Field Office, Austin, Texas, at the above address. Please refer to permit number TE–023965–0 when submitting comments.

FOR FURTHER INFORMATION CONTACT: Scott Rowin at the above Austin Ecological Services Field Office.

SUPPLEMENTARY INFORMATION: Section 9 of the Act prohibits the ''taking'' of endangered species such as the Houston toad. However, the Service, under limited circumstances, may issue permits to take endangered wildlife species incidental to, and not the purpose of, otherwise lawful activities. Regulations governing permits for endangered species are at 50 CFR 17.22.

Applicant: Ray Don Tilley plans to construct a single family residence on 0.5 acres of the 4.55 acres of adjacent Lots 27 and 28 of the Pine Forest Subdivision, Unit 9, Block 2 and Lots 562 and 564 of the Tahitian Village Subdivision, Unit 2, Block 5, Bastrop County, Texas. This action will eliminate 0.5 acres or less and result in indirect impacts within the lot. The applicant proposes to compensate for this incidental take of the Houston toad by providing $1,500 to the National Fish and Wildlife Foundation for the specific purpose of land acquisition and management within Houston toad habitat, as identified by the Service.

Geoffrey L. Haskett,

Regional Director, Region 2, Albuquerque, New Mexico.

[FR Doc. 00–8437 Filed 4–5–00; 8:45 am]

BILLING CODE 4510–55–P

DEPARTMENT OF THE INTERIOR

Bureau of Land Management

[WY/PL–00/012+1310]

South Baggs Area Natural Gas Development Project

AGENCY: Bureau of Land Management, Interior.

ACTION: Notice of availability of Final Environmental Impact Statement.

SUMMARY: The Bureau of Land Management (BLM) announces the availability of the Final Environmental Impact Statement (FEIS) for the South Baggs Area Natural Gas Project (Project). The FEIS analyzes the environmental consequences of Merit Energy Company's (Merit) proposal to drill up to fifty (50) additional natural gas wells in the Project area over the next 10 years. The Project area encompasses approximately 12,352 acres of Federal, State, and private lands located approximately 3 miles west of the town of Baggs in Carbon County, Wyoming, within the administrative jurisdiction of the BLM Rawlins Field Office. Approximately 43 oil and gas wells have been drilled within the Project area to date.

DATES: Written comments on the FEIS will be accepted for 30 days following the date that the Environmental Protection Agency (EPA) publishes their notice of availability of the FEIS in the **Federal Register**. The EPA notice is expected to be published April 14, 2000.

ADDRESSES: Send written comments to: Larry Jackson, Team Leader, Rawlins Field Office, Bureau of Land Management, 1300 N. Third Street, P.0. Box 2407, Rawlins, Wyoming 82301, or e-mail to: rawlins wymail@blm.gov.

FOR FURTHER INFORMATION CONTACT: Larry Jackson, phone 307–328–4231.

SUPPLEMENTARY INFORMATION: The Project FEIS analyzes the impacts of drilling from 40 (Alternative A) to 90 (Alternative B) natural gas wells, along with constructing access roads, pipelines, and other ancillary facilities (compressor station, water disposal sites, etc.) on 10,067 acres of Federal land and 2,285 acres of non-Federal lands. The exact numbers of additional wells, the locations of those wells, and the timing for drilling them are contingent upon drilling success, production technology, and economic considerations. The No Action Alternative analyzes the current level of drilling and development (43 wells) in the South Baggs Project area.

If you wish to comment on the FEIS, we request you make your comments as specific as possible. Comments will be more helpful if they include suggested changes, sources, or methodologies. Opinions or preference will not receive a formal response; however, BLM will consider them in its decision.

Comments, including names and street addresses of respondents, will be available for public review at the address listed above during regular

business hours (7:45 a.m.–4:30 p.m.) Monday through Friday, except holidays. Individual respondents may request confidentiality. If you wish to withhold your name or street address from public review or from disclosure under the Freedom of Information Act, you must state this prominently at the beginning of your written comment. Such requests will be honored to the extent allowed by law. All submissions from organizations or businesses, and from individuals identifying themselves as representatives or officials of organizations or businesses, will be made available for public inspection in their entirety.

Dated: March 30, 2000.

Alan L. Kesterke,

Associate State Director.

[FR Doc. 00–8439 Filed 4–5–00; 8:45 am]

BILLING CODE 4310–22–P

DEPARTMENT OF THE INTERIOR

Bureau of Land Management

[WY–040–00–1310–EJ]

Jonah Field Environmental Assessment, Sublette County, WY

AGENCY: Bureau of Land Management, Interior.

ACTION: Notice of availability of an Environmental Assessment (EA) addressing impacts associated with a modification to development of the Jonah Field, as approved by the Jonah II Natural Gas Project Final Environmental Impact Statement (EIS).

SUMMARY: This Environmental Assessment addresses modifications to the April 27, 1998, Record of Decision (ROD) for the Jonah Field II Natural Gas Project (EIS). In that ROD, BLM approved development of the Jonah Field at one gas well per 80 acres. Project proponents, McMurry Oil Company and Amoco Production Company, have requested BLM approval to develop the east half of the field at one well per 40 acres.

At this point, the analysis of the proposed project modification has resulted in a finding of no significant impact (FONSI). Should new or additional information be provided during the public review and comment period on the EA that would identify significant impacts resulting from the proposed project modification, the EA will become the draft supplemental EIS. Subsequently, a final EIS and ROD would be issued. The public will be notified through newspaper articles and a subsequent **Federal Register** notice, if significant impacts are identified and if the EA process will be replaced with the EIS process. If the FONSI is not reversed, the decision record for the EA will be prepared and issued.

DATES: Public comments concerning this proposed project modification will be accepted for 45 days following the date this notice is published in the **Federal Register**. Copies of the EA will have been distributed by mail to local media and known interested parties on or before the date this notice is published.

ADDRESSES: Send written comments to: Bureau of Land Management, Rock Springs Field Office, ATTN: Arlan Hiner, Project Manager, 280 Highway 191 North, Rock Springs, Wyoming 82901.

FOR FURTHER INFORMATION CONTACT: Arlan Hiner, Project Manager, Bureau of Land Management, Rock Springs Field Office, Telephone 307–352–0206. Information and a copy of the Jonah Field Natural Gas Project Modification EA can be obtained from Mr. Hiner at the above phone number or from the following BLM offices: Rock Springs Field Office, 280 Highway 191 North, Rock Springs, Wyoming 82901; Pinedale Field Office, 432 East Mill Street, P.O. Box 768, Pinedale, Wyoming 82941; and Wyoming State Office, 5353 Yellowstone Road, P.O. Box 1828, Cheyenne, Wyoming 82003.

SUPPLEMENTARY INFORMATION: The Jonah Field Natural Gas Project is located approximately 32 miles south of Pinedale, Wyoming, and 28 miles north of Farson, Wyoming, within Townships 28 and 29 North, Ranges 107, 108, and 109 West, Sublette County. The 29,200 acre project area includes 26,640 acres of Federally-owned surface and minerals, 640 acres of privately-owned surface over Federally-owned minerals, and 1,920 acres of surface and minerals owned by the State of Wyoming. Currently, 170 active gas wells, out of 497 wells approved in the Jonah II EIS ROD, have been drilled in the project area.

The project proponents would like to proceed with drilling gas wells in the east half of the project area at a 40 acre spacing (16 wells per section), beginning in the summer of 2000. They expect that drilling 497 wells will allow them to adequately extract the natural gas. There are 170 wells located within the Jonah Field, which are served by three transportation pipelines. This field development modification will not require any additional transportation pipelines. The proposed development modification would include a separator, dehydrator, production tanks, and tinhorns (for holding produced water) at each surface well location; an access road and gas gathering pipeline to each surface well location; water supply wells; and produced water disposal systems (either injection wells or surface pits).

The companies will be allowed to continue to drill wells at 80 acre spacing, as approved by the ROD for the Jonah II EIS, until the decision on the development modification is made.

Dated: March 29, 2000.

Alan R. Pierson,

State Director.

[FR Doc. 00–8438 Filed 4–5–00; 8:45 am]

BILLING CODE 4310–22–P

DEPARTMENT OF THE INTERIOR

Bureau of Land Management

[CA–160–1430–ET; CACA 7820]

Public Land Order No. 7435; Revocation of Public Land Order No. 460; California; Correction

AGENCY: Bureau of Land Management, Interior.

ACTION: Correction.

SUMMARY: In **Federal Register** document 00–7213 beginning on page 15648 in the issue of Thursday, March 23, 2000, make the following correction:

On page 15648 in the second column, the section and subdivision which reads ''Sec. 14, N½W¼'' is hereby corrected to read ''Sec. 14, N½NW¼''.

Dated: March 29, 2000.

Duane Marti,

Acting Chief, Branch of Lands (CA–931).

[FR Doc. 00–8509 Filed 4–5–00; 8:45 am]

BILLING CODE 4310–40–P

DEPARTMENT OF THE INTERIOR

National Park Service

30 Day Notice of Request for Extension of a Currently Approved Information Collection

AGENCY: National Park Service, Department of the Interior.

ACTION: Notice of submission to OMB and request for comments.

SUMMARY: In accordance with the Paperwork Reduction Act of 1995 (Public Law 104–13), this notice announces the National Park Service's (NPS) intention to request an extension for a currently approved information collection request used in the Historic Preservation Tax Incentives Program administered by the NPS.

The Primary Purpose of the Information Collection Request: Section 47 of the Internal Revenue Code requires that the Secretary of the Interior certify to the Secretary of the Treasury upon application by owners of historic properties for Federal tax benefits, (a) the historic character of the property, and (b) that the rehabilitation work is consistent with that historic character. The National Park Service administers the program in partnership with the Internal Revenue Service. The Historic Preservation Certification Application is used by the National Park Service to evaluate the condition and historic significance of buildings undergoing rehabilitation for continued use, and to evaluate whether the rehabilitation work meets the Secretary of the Interior's Standards for Rehabilitation.

DATES: Comments on this notice must be received by May 8, 2000 to be assured of consideration.

The bureau solicits public comments as to:

1. Whether the collection of information is necessary for the proper performance of the functions of the bureau, including whether the information will have practical utility;

2. The accuracy of the bureau's estimate of the burden of the collection of information, including the validity of the methodology and assumptions used;

3. The quality, utility, and clarity of the information to be collected; and,

4. How to minimize the burden of the collection of information on those who are to respond, including the use of appropriate automated electronic, mechanical, or other forms of information technology.

ADDRESSES: Send comments to: Desk Officer, Interior Department, Office of Information and Regulatory Affairs, Office of Management and Budget, Washington, DC 20503. Also send a copy of your comments to: Michael Auer, National Park Service, 1849 C St., NW, Room NC 200, Washington, DC 20240; 202–343–9578.

All comments will become a matter of public record. Copies of the proposed Information Collection Request can be obtained from Michael J. Auer, Ph.D., National Park Service, 1849 C St., NW, Room NC 200, Washington, DC 20240.

FOR FURTHER INFORMATION CONTACT: Michael Auer, 202–343–9578.

SUPPLEMENTARY INFORMATION:

1. *Title:* Historic Preservation Certification Application.

2. *Summary:* Request for an extension for a currently approved information collection request used in the Historic Preservation Tax Incentives Program administered by the National Park Service.

3. *Need for information and proposed use:* To enable the Secretary of the Interior to make certifications to the Secretary of the Treasury concerning historic buildings undergoing rehabilitation for the purposes of a Federal income tax credit.

4. Respondents are owners of historic buildings, or qualified long-term lessees. The number of respondents is estimated to be 3,000 per year. The frequency of response is on occasion, as requested by owners of buildings (one response per respondent).

5. The total annual reporting and recordkeeping burden is estimated to be 7,500 hours.

6. Comments may be submitted to the Office of Management and Budget (OMB).

Dated: March 31, 2000.

Leonard E. Stowe,

Information Collection Clearance Officer.

[FR Doc. 00–8573 Filed 4–5–00; 8:45 am]

BILLING CODE 4310–70–P

DEPARTMENT OF JUSTICE

Office of Justice Programs

Bureau of Justice Statistics; Agency Information Collection Activities; Proposed Collection; Comment Request

ACTION: Notice of information collection under review; New collection; Census of State and local law enforcement agencies.

Office of Management and Budget approval is being sought for the information collection listed below. This proposed information collection was previously published in the **Federal Register** on January 20, 2000, at 65 FR 3249 allowing for a 60-day public comment period. No comments were received by the Bureau of Justice Statistics.

The purpose of this notice is to allow an additional 30 days for public comments. Comments are encouraged and will be accepted until May 8, 2000. This process is conducted in accordance with 5 CFR part 1320.10.

Written comments and suggestions from the public and affected agencies concerning the proposed collection of information should address one or more of the following points:

(1) Evaluate whether the proposed collection of information is necessary for the proper performance of the functions of the agency, including whether the information will have practical utility;

(2) Evaluate the accuracy of the agency's estimate of the burden of the proposed collection of information, including the validity of the methodology and assumptions used;

(3) Enhance the quality, utility, and clarity of the information to be collected;

(4) Minimize the burden of the collection of information on those who are to respond through the use of appropriate automated, electronic mechanical, other technological collection techniques, or other forms of information technology that permit electronic submissions of responses.

Overview of This Information Collection

(1) *Type of information collection:* New collection.

(2) *Title of the form/collection:* 2000 Census of State and Local Law Enforcement Agencies.

(3) *Agency form numbers and the applicable component of the Department sponsoring the collection:* Forms CJ–38L and CJ–38S; Law Enforcement Statistics, Bureau of Justice statistics, Office of Justice Programs,U.S. Department of Justice.

(4) *Affected public who will be asked or required to respond, as well as a brief abstract:* State and local government agencies; The Census of State and Local Law Enforcement Agencies provides a comprehensive assessment of the characteristics of State and local law enforcement agencies in terms of functions performed, number of personnel, requirements for entry-level officers, types of equipment used, degree of computerization, special policies and programs, and community policing activities.

(5) *An estimate of the total number of respondents and the amount of time estimated for an average respondent to respond:* A total of 19,000 respondents at 44 minutes per response. This includes 3,000 respondents to from CJ–38L at 2 hours per response,and 16,000 respondents to form CJ–38S at 30 minutes per response.

(6) *An estimate of the total public burden (in hours) associated with the collection:* 14,000 annual burden hours.

If you have additional comments, suggestions, or need a copy of the proposed collection instrument with instruction, or additional information, please contact Brenda E. Dyer, Deputy Clearance Officer, U.S. Department of Justice. Information Management and Security Staff, Justice Management Division, 1331 Pennsylvania Avenue, NW, suite 1220, Washington, DC 20530.

Dated: March 31, 2000.

Brenda E. Dyer,

Deputy Clearance Officer, U.S. Department of Justice.

[FR Doc. 00–8422 Filed 4–5–00; 8:45 am]

BILLING CODE 4410–18–M

DEPARTMENT OF LABOR

Office of the Secretary

Submission for OMB Review; Comment Request

March 30, 2000.

The Department of Labor (DOL) has submitted the following public information collection requests (ICRs) to the Office of Management and Budget (OMB) for review and approval in accordance with the Paperwork Reduction Act of 1995 (Pub. L. 104–13, 44 U.S.C. Chapter 35). A copy of each individual ICR, with applicable supporting documentation, may be obtained by calling the Department of Labor. To obtain documentation for BLS, ETA, PWBA, and OASAM contact Karin Kurz ((202) 219–5096 ext. 159 or by E-mail to Kurz-Karin@dol.gov). To obtain documentation for ESA, MSHA, OSHA, and VETS contact Darrin King ((202) 219–5096 ext. 151 or by E-Mail to King-Darrin@dol.gov).

Comments should be sent to Office of Information and Regulatory Affairs, Attn: OMB Desk Officer for BLS, DM, ESA, ETA, MSHA, OSHA, PWBA, or VETS, Office of Management and Budget, Room 10235, Washington, DC 20503 ((202) 395–7316), on or before May 8, 2000.

The OMB is particularly interested in comments which:

- Evaluate whether the proposed collection of information is necessary for the proper performance of the functions of the agency, including whether the information will have practical utility;
- Evaluate the accuracy of the agency's estimate of the burden of the proposed collection of information, including the validity of the methodology and assumptions used;
- Enhance the quality, utility, and clarity of the information to be collected; and
- Minimize the burden of the collection of information on those who are to respond, including through the use of appropriate automated, electronic, mechanical, or other technological collection techniques or other forms of information technology, *e.g.,* permitting electronic submission of responses.

Agency: Occupational Safety and Health Administration.

Title: Inorganic Arsenic (29 CFR 1910.1018).

Type of Review: Extension of a currently approved collection.

OMB Number: 1218–0104.

Frequency: On occasion.

Affected Public: Business or other for-profit; Federal Government; State, Local or Tribal Government.

Respondents: 42.

Responses: 58,763.

Estimated Time Per Respondent: Time per response ranges from approximately 5 minutes for employers to maintain employee exposure monitoring and medical records to 1.67 hours for an employee to complete a medical examination.

Total Burden Hours: 7,376.

Total Annualized capital/startup: $0.

Total annual costs (operating/maintaining systems or purchasing services): $1,132,408.

Description: The information collection requirements in the Inorganic Arsenic Standard provide protection for employees from the adverse health effects associated with occupational exposure to inorganic arsenic. The Inorganic Arsenic Standard requires employers to monitor employee exposure to inorganic arsenic; monitor employee health; develop and maintain employee exposure-monitoring records; notify OSHA area office in writing of regulated areas, and changes to these areas; and provide employees with information about their exposures and the health effects of exposure to inorganic arsenic.

Agency: Occupational Safety and Health Administration.

Title: Coke Oven Emissions (29 CFR 1910.1028).

Type of Review: Extension of a currently approved collection.

OMB Number: 1218–0128.

Frequency: On occasion.

Affected Public: Business or other for-profit; Federal Government, State, Local or Tribal Government.

Respondents: 14.

Responses: 83,111.

Estimated Time Per Respondent: Time per response ranges from approximately 5 minutes for employers to maintain employee exposure monitoring and medical records to 4 hours to complete a medical examination.

Total Burden Hours: 60,664.

Total Annualized capital/startup: $0.

Total annual costs (operating/maintaining systems or purchasing services): $1,365,365.

Description: The Coke Oven Standard, and its information collection requirements, is designed to provide protection for employees from the adverse health effects associated with occupational exposure to coke oven emissions. The Coke Oven Standard requires employers to monitor employee exposure to coke oven emissions, to monitor employee health, and to provide employees with information about their exposures and the health effects of exposure to coke oven emissions.

Agency: Occupation Safety and Health Administration.

Title: 1,3-Butadiene (29 CFR 1910.1051).

Type of Review: Extension of a currently approved collection.

OMB Number: 1218–0170.

Frequency: On occasion.

Affected Public: Business or other for-profit; Federal Government; State, Local or Tribal Government.

Respondents: 115.

Responses: 335,944.

Estimated Time Per Respondent: Time per response ranges from approximately 5 minutes for employers to maintain employee exposure monitoring and medical records to 1.5 hours for an employee to complete a medical examination.

Total Burden Hours: 2,909.

Total Annualized capital/startup: $0.

Total annual costs (operating/maintaining systems or purchasing services): $82,010.

Description: The information collection requirements in the 1,3-Butadiene Standard provide protection for employees from the adverse health effects associated with occupational exposure to 1,3-Butadiene. The 1,3-Butadiene Standard requires employers to monitor employee exposure to 1,3-Butadiene; develop and maintain compliance and exposure-goal programs if employee exposures to 1,3-Butadiene are above the Standard's permissible exposure limits or action level; monitor employee health, and to provide employees with information about their exposures and the health effects of exposure to 1,3-Butadiene.

Agency: Pension and Welfare Benefits Administration.

Title: Notice of Enrollment Rights.

Type of Review: Extension of a currently approved collection.

OMB Number: 1210–0101.

Affected Public: Business or other for-profit, Not-for-profit institutions, Individuals or households.

Frequency of Response: On occasion.

Respondents: 2,600,000.

Responses: 9,602,000.

Total Estimated Burden Hours: 7,200.

Total Annualized Capital/Startup Costs: $0.

Total Annual Cost (Operating and Maintenance): $841,000.

Total Annualized Cost: $841,000.

Description: Subtitle B of Title 1 of ERISA, Part 7, section 707, added by the Health Care Portability and Accountability Act of 1996 (Pub. L. 104–191, August 31, 1996) (HIPAA) authorizes the Secretary of Labor, in coordination with the Secretary of Health and Human Services (HHS) and the Secretary of the Treasury, to promulgate such regulations as may be necessary or appropriate to carry out the provisions of the Statute. Accordingly, Interim Rules Implementing the Portability Requirement for Group Health Plans were published on April 8, 1997 (62 FR 16920 through 16923) (April 8 Interim Rules).

In order to improve participants' understanding of their rights under an employer's group health plan, HIPAA requires that a participant be provided with a description of a plan's special enrollment rules on or before the time when a participant is offered the opportunity to enroll in a group health plan. This ICR covers the disclosure of enrollment rights.

Agency: Pension and Welfare Benefits Administration.

Title: Notice of Pre-existing Condition Exclusion.

Type of Review: Extension of a currently approved collection.

OMB Number: 1210–0102.

Affected Public: Business or other for-profit, Not-for-profit institutions, Individuals or households.

Frequency of Response: On occasion.

Respondents: 1,300,000.

Responses: 8,570,000.

Total Estimated Burden Hours: 9,004.

Total Annualized Capital/Startup Costs: $0.

Total Annual Cost (Operating and Maintenance): $1,088,000.

Total Annualized Cost: $1,088,000.

Description: Subtitle B of Title 1 of ERISA, Part 7, section 707, added by the Health Care Portability and Accountability Act of 1996 (Pub. L. 104–191, August 31, 1996) (HIPAA) authorizes the Secretary of Labor, in coordination with the Secretary of Health and Human Services (HHS) and the Secretary of the Treasury, to promulgate such regulations as may be necessary or appropriate to carry out the provisions of the statute. Accordingly, Interim Rules implementing the Portability Requirement for Group Health Plans were published on April 8, 1997 (62 FR 16920 through 16923) (April 8 Interim Rules).

In order to meet HIPAA's goal of improving portability of health care coverage, participants need to understand their right to demonstrate prior creditable coverage when entering a group health plan that imposes pre-existing condition exclusion provisions. In addition, participants entering plans that use an alternative method of determining creditable coverage also need to be informed of the plan's provisions. Therefore, the Department has determined that plans that contain these provisions must disclose that fact to new participants, as well as inform individual participants of the extent to which a pre-existing condition exclusion applies to them. This ICR covers the disclosure of pre-existing condition exclusions.

Agency: Pension and Welfare Benefits Administration.

Title: Establishing Prior Creditable Coverage.

Type of Review: Extension of a currently approved collection.

OMB Number: 1210–0103.

Affected Public: Business or other for-profit, Not-for-profit institutions, Individuals or households.

Frequency of Response: On occasion.

Respondents: 2,600,000.

Reponses: 44,396,000.

Total Estimated Burden Hours: 351,150.

Total Annual Cost (Operating and Maintenance): 429,289,000.

Total Annualized Cost: $34,689,000.

Description: Subtitle B of Title 1 of ERISA, Part 7, section 707, added by the Health Care Portability and Accountability Act of 1996 (Pub. L. 104–191, August 31, 1996) (HIPAA) authorizes the Secretary of Labor, in coordination with the Secretary of Health and Human Services (HHS) and the Secretary of the Treasury, to promulgate such regulations as may be necessary or appropriate to carry out the provisions of the statute. Accordingly, Interim Rules implementing the Portability Requirement for Group Health Plans were published on April 8, 1997, (62 FR 16920 through 16923) (April 8 Interim Rules).

In order to meet HIPAA's goal of improving access to and portability of health care benefits, the statute provides that, after the submission of evidence establishing prior creditable coverage, a subsequent health insurance provider would be limited to the extent to which it could use pre-existing condition exclusions to limit coverage. This ICR covers the submission of materials sufficient to establish prior creditable coverage.

Ira L. Mills,

Department Clearance Officer.

[FR Doc. 00–8444 Filed 4–5–00; 8:45 am]

BILLING CODE 4510–29–M

DEPARTMENT OF LABOR

Employment and Training Administration

Proposed Collection of Job Corps Health Questionnaire Comment Request

ACTION: Notice.

SUMMARY: The Department of Labor, as part of its continuing effort to reduce paperwork and respondent burden conducts a preclearance consultation program to provide the general public and Federal agencies with an opportunity to comment on proposed and/or continuing collections of information in accordance with the Paperwork Reduction Act of 1995 (PRA95) [44 U.S.C. 3506(c)(2)(A)]. This program helps to ensure that requested data can be provided in the desired format, reporting burden (time and financial resources) is minimized, collection instruments are clearly understood, and the impact of collection requirements on respondents can be properly assessed. Currently, the Job Corps is soliciting comments concerning the proposed revision of the Health Questionnaire, Form ETA 6–53, a copy of which is attached to this notice.

DATES: Written comments must be submitted to the office listed; in the **ADDRESSES** section below on or before June 5, 2000.

ADDRESSES: Barbara J. Grove, RN, National Nursing Director, Job Corps, room N 4507, 200 Constitution Avenue, NW, Washington, DC 20210, 202–219–5556, ext. 121 (this is not a toll-free number), 202–219–5183 (fax).

SUPPLEMENTARY INFORMATION:

I. Background

The Job Corps program is described in its enabling legislation under Public Law 105–220, Workforce Investment Act of 1998. Section 145 establishes standards and procedures for obtaining data from each applicant relating to their needs. The Department of Labor's regulation at 20 CFR 670.410 further details the recruitment and screening of applicants.

Individuals who wish to enroll in the Job Corps program, must first be determined to be eligible and selected

for enrollment. This process is carried out by admissions agencies, including state employment services, contracted to recruit young people for the Job Corps program. The admission process ensures that applicants meet all the admission criteria as defined in the *Policy and Requirement Handbook (PRH) Chapter 1, Outreach and Admissions, October 1998*.

Nonmedical personnel in the admission's office (admission counselors) conduct the admission interview and complete the required application forms. The ETA 6–53 is completed on all applicants that have been determined to be eligible and selected for the Job Corps Program.

II. Review Focus

The Department of Labor is particularly interested in comments which:

- Evaluate whether the proposed collection of information is necessary for the proper performance of the functions of the agency, including whether the information will have practical utility;
- Evaluate the accuracy of the agency's estimate of the burden of the proposed collection of information, including the validity of the methodology and assumptions used;
- Enhance the quality, utility, and clarity of the information to be collected; and
- Minimize the burden of the collection of information on those who are to respond, including through the use of appropriate automated, electronic, mechanical, or other technological collection techniques or other forms of information technology, *e.g.,* permitting electronic submission or responses.

III. Current Actions

After the applicant has been determined to be eligible and then selected for the Job Corps Program, the applicant is assigned to a center. After being assigned to a center, the ETA 6–53 is completed on all applicants. If additional health information is needed from previous health care providers, this information is collected and the admission packet in its entirety, is sent to the center of assignment. When the application is received on center, it is reviewed; and if there are health related issues, the application is forwarded to the center's health services. After reviewing the application, if it is felt that the applicant's health needs can not be met on center, the folder is sent to the Regional Office for review. The folder is then reviewed by the Regional Health Consultant and a recommendation is made to the Regional Director. The Regional Director makes the final determination regarding enrollment of the applicant. If the application is denied, the applicant will be referred to other state and/or local agencies.

Experience throughout the Job Corps indicates that the Health Questionnaire is an excellent guide in identifying current and potential applicant health needs. Its use results in considerable savings of time, by both center health staff and regional health consultants and staff, and of money, by reducing high medical program costs due to medical separations.

Revisions of the ETA 6–53 have been made to reflect the Workforce Investment Act, and to be more sensitive to applicants with health needs.

Type of Review: Reinstatement with Change.

Agency: Employment and Training Agency.

Title: Job Corps Health Questionnaire, ETA 6–53.

OMB Number: 1205–0033.

Agency Number: ETA 653.

Recordkeeping: The applicant is not required to retain the records; admission counselors or contractor's main offices are required to retain records of applicants who are enrolled in the program for three years from the date of application.

Affected Public: Individuals or households.

Frequency: The form would be completed on each applicant.

Total Responses: 93,000.

Average Time for Responses: It takes approximately 5 minutes to complete the form. (It may take longer for some applicants.)

Estimated Total Burden Hours: 7750. [93,000 (number of applications) ÷ 12 (number of applications that can be completed in an hour) = 7750].

Total Burden Cost (capital/startup): 0.

Total Burden Cost: (operating/maintaining): Operating and maintenance services associated with these forms are contracted yearly by the Federal Government with outreach and admissions contractors, according to designated recruiting areas. This is one of the many functions the contractors perform for which precise costs cannot be identified. Based on the past experience of recruitment contractors, however, the annual cost for contractor staff and related cost is estimated to be about $771,750. An additional cost of $11,974 is added for the applicant's time, making the total $783,724. For the approximately 70 percent of the Job Corps applicants who have never worked, no value is determined. For the remaining 30 percent of applicants who have been in the work force previously for any length of time, whether full-time or less, the current minimum wage of $5.15 is used to determine the value of the applicant time.

Comments submitted in response to this comment request will be summarized and/or included in the request for Office of Management and Budget approval of the information collection request: they will also become a matter of public record.

Dated: March 31, 2000.

Jackie Roberts,

Acting Deputy Director, Job Corps.

BILLING CODE 4510–30–P

Job Corps Health Questionnaire

U.S. Department of Labor
Employment and Training Administration

OMB Approval No. 1205-0033
Expiration Date: xx/xx/xxxx

PURPOSE: To determine the health and accommodation/modification needs of the Job Corps applicant.

INSTRUCTIONS: Job Corps centers provide health care; therefore, please answer all of the questions correctly so that the center you go to can provide you with appropriate health services. The collection of this information is authorized by PL 105-220. The information is requested on a voluntary basis.

1. Name (Last, First, Middle Initial)

2. Social Security Number
___ ___ ___-___ ___-___ ___ ___ ___

3. Sex (M/F) 4. Height (in) 5. Weight (lb)

6 What is your general Health Condition (circle one): Excellent Good Fair

7. a. Are you or your family covered by health insurance? NO ☐ YES ☐
(If YES, obtain copy of health insurance card and attach to this form.)
b. Are you or your family covered by Medicaid? NO ☐ YES ☐
(If YES, obtain copy of Medicaid card and attach to this form.)

A "YES" answer to any item in questions 8, 9, or 10 requires an explanation in question 11 on the reverse of this form.

8. a. Are you currently under the care of a physician or other health professional? NO ☐ YES ☐
b. Are you currently taking any prescribed medication? NO ☐ YES ☐
c. Have you been advised to have any surgical procedure or medical treatment? NO ☐ YES ☐
d. Have you been hospitalized for a medical or mental health reason within the past 2 years? NO ☐ YES ☐
e. Have you received counseling or treatment for drug or alcohol use within the past 2 years? NO ☐ YES ☐
f. Have you ever been refused or discharged from military service for medical or mental health reasons? NO ☐ YES ☐
g. Do you wear a medical device or orthodontic braces? NO ☐ YES ☐
h. Are you allergic to any drugs, medicines, or foods? NO ☐ YES ☐
i. Have you ever attempted or seriously thought about attempting suicide? NO ☐ YES ☐

9. Have you EVER had or do you now have any of the following conditions?

	No	Yes		No	Yes
a. Anemia (including sickle cell disease)			h. Kidney, bladder, or urinary problems		
b. Asthma			i. Speech impairment (e.g., stuttering)		
c. Visual impairment			j. Tuberculosis (TB) or positive TB skin test		
d. Hearing impairment			k. Ulcer of stomach or intestines		
e. Serious dental problems			l. Epilepsy, seizures, convulsions		
f. Diabetes (sugar in urine)			m. Other health issues		
g. Heart condition or high blood pressure			n. **FEMALES:** Are you pregnant? If YES, date of last menstrual period_____		

10. Do you have any physical or mental disability which will require an accommodation or modification to participate in the Job Corps program? ☐ ☐

ETA 6-53 (rev xx/x)

11. Provide explanation below of any "YES" responses to items in questions 8, 9, or 10. If additional space is needed, attach separate sheet.

Item	Explanation

I (we) authorize the Job Corps to receive from doctors, clinics, hospitals, or other sources, a complete transcript of my (son's, daughter's, ward's) health records for the purpose of determining the health needs of the applicant. I (we) authorize release of medical information to staff with a need for that information, and to the local health department when required by law. I (we) authorize an ENTRANCE MEDICAL EXAMINATION which includes blood testing to identify conditions such as anemia, syphilis, and HIV infection; urine testing for conditions such as diabetes, nephritis, pregnancy, and for controlled substance. I (we) understand the reasons for the medical examination and health testing, and have had the opportunity to ask questions. I (we) also authorize immunizations for tetanus, diphtheria, poliomyelitis, measles, mumps, rubella, influenza, and others, if necessary; and a skin test for tuberculosis. I (we) certify that the information that has been provided on this medical form is true and complete to the best of my (our) knowledge. I (we) understand that any false statement or dishonest answers will be grounds for the dismissal for the above-named individual and may be punishable by law.

Applicant Signature	Date
Parent/Guardian Signature (if applicant is a minor)	Date

Persons are not required to respond to this collection of information unless it displays a currently valid OMB control number. Public reporting burden for this collection of information is estimated to average 5 minutes per response, including the time for reviewing instructions, searching existing data sources, gathering and maintaining the data needed, and completing and reviewing the collection of information. Send comments regarding this burden estimate or any other aspect of this collection of information, including suggestions for reducing this burden, to the U.S. Department of Labor, Room N-4507, 200 Constitution Avenue, NW, Washington, DC 20210 (1205-0033), Washington, DC 20503. (Paperwork Reduction Project 1205-0033).

ETA 6-53 (rev xx/x)

JOB CORPS HEALTH QUESTIONNAIRE, ETA 6-53

Purpose. To obtain a health history on each applicant and to determine the health and accommodation/modification needs of the Job Corps applicant.

Originator. Job Corps admissions counselor.

Frequency. Once for each student at time of application.

Distribution. This is a 2-page form. If there are "yes" answers to one or more questions on the form, the originator (admissions counselor) must obtain relevant physician/institution reports and forward the applicant's folder, including the ETA 6-53, to the Job Corps center of assignment.

General Instructions. Information is placed on the form as given by the applicant during the health interview. This information is confidential and must be so maintained by the admissions counselor. The admissions counselor must:

- Ensure that the health questionnaire is fully understood by the applicant and that all entries are completed and appropriately written or checked.
- Obtain additional information or arrange for a new health examination or evaluation for the applicant when requested by the center of assignment.

Detailed Instructions.

Item	Comments
1	Self Explanatory
2	Self Explanatory
3	Self Explanatory
4	Self Explanatory
5	Self Explanatory
6	Self Explanatory

Item	Comments

7,8 Ask questions as stated and check "NO" or "YES."

- Attach copy of insurance or Medicaid card if appropriate.
- If possible, obtain the medical diagnosis of the condition rather than the applicant's description of symptoms.
- Establish appropriate dates for the onset of the condition and date it ceased, if appropriate.
- Obtain information about all hospital stays even if several were for the same condition. List only dates that applicant was in the hospital. Do not include emergency room visits.

9 Obtain information about each condition. Explain how often the problem occurs (e.g., heart condition--cannot walk up stairs without getting short of breath). Specify whether the applicant still has the condition.

10 Record whether applicant has a physical or mental impairment that requires a reasonable accommodation to perform the essential functions of the Job Corps program.

11 Use this section to record any comments provided by the applicant for questions 8, 9, or 10. If the applicant is not sure whether he/she had one of the conditions mentioned in questions 8 or 9 or requires an accommodation (item 10), include whatever information the applicant provides.

If the applicant is reluctant to give additional information, the admissions counselor must not pressure the applicant. Indicate in this section that the applicant declined to comment.

[FR Doc. 00–8443 Filed 4–5–00; 8:45 am]
BILLING CODE 4510–30–C

DEPARTMENT OF LABOR

Employment and Training Administration

Proposed Collection; Comment Request

ACTION: Notice.

SUMMARY: The Department of Labor, as part of its continuing effort to reduce paperwork and respondent burden conducts a preclearance consultation program to provide the general public and Federal agencies with an opportunity to comment on proposed and/or continuing collections of information in accordance with the Paperwork Reduction Act of 1995 (PRA95) [44 U.S.C. 3506(c)(2)(A)]. This program helps to ensure that requested data can be provided in the desired format, reporting burden (time and financial resources) is minimized, collection instruments are clearly understood, and the impact of collection requirements on respondents can be properly assessed. Currently, the Employment and Training Administration is soliciting comments concerning the proposed renewal of Job Corps Placement and Assistance Record, ETA form 678. A copy of the proposed information collection request (ICR) can be obtained by contacting the office listed below in the **ADDRESSES** section of this notice.

DATES: Written comments must be submitted to the office listed in the addresses section below on or before June 5, 2000.

ADDRESSES: June P. Veach, Office of Job Corps, 200 Constitution Avenue NW, Room N–4507, Washington, DC 20210. Telephone: (202) 219–5556, ext. 129 (This is not a toll-free number); Fax number: (202) 219–5183 (This is not a toll-free number); E-mail Internet address: *Jvewach@doleta.gov.*

SUPPLEMENTARY INFORMATION:

I. Background

The Job Corps program is designed to serve low-income young women and men, 16 through 24, who are in need of additional vocational, educational and social skills training, and other support services in order to gain meaningful employment, return to school or enter the Armed Forces. Authorized by the Workforce Investment Act (WIA) of 1998, Job Corps is operated by the Department of Labor through a nationwide network of 118 Job Corps centers. The program is primarily residential, operating 24 hours per day, 7 days per week, with non-resident students limited by legislation to 20 percent of national enrollment. These centers presently accommodate more than 42,000 students. While students may stay in Job Corps up to two years to complete their programs, the average length of stay is eight months. Thus, more than 68,000 young people receive training in Job Corps in a year; of the number of students who separate from the program each year, 82 percent are placed in jobs, further education programs, or the Armed Forces. Seventy percent of all job placements are in areas for which students trained. The purpose of this collection is to gather information about each student's placement outcome after separation from the program. This form is critical to the placement process and measurement of placement outcomes and ultimately of program performance.

II. Review Focus

The Department of Labor is particularly interested in comments which:

- Evaluate whether the proposed collection of information is necessary for the proper performance of the functions of the agency, including whether the information will have practical utility;
- Evaluate the accuracy of the agency's estimate of the burden of the proposed collection of information, including the validity of the methodology and assumptions used;
- Enhance the quality, utility, and clarify of the information to be collected; and
- Minimize the burden of the collection of information on those who are to respond, including through the use of appropriate automated, electronic, mechanical, or other technological collection techniques or other forms of information technology, e.g., permitting electronic submissions of responses.

III. Current Actions

The form ETA 678 has expired. This form is used to evaluate program effectiveness. The introduction of the Workforce Investment Act of 1998 created a delay in the renewal process because of changes in Job Corps placement requirements mandated by the Act. Job Corps has continued to collect information because job, school, or military placements are a major indicator of program performance. The collection provides placement agencies with basic training information regarding separated students and provides the Department of Labor with information on the placement status of students subsequent to separation from the Program. No harm has been done while the form was used to collect data. No reports have been submitted and/or developed for Congress during the period. This action will effect a reduction in paperwork burden hours.

The revisions involve the addition of collecting data on program graduates as required by the Act, and a change from the use of DOT codes to O*Net codes to determine the job category and training match. In addition, with the WIA-mandated follow-up of graduates' placement status and provision of placement services for a year following separation from the program, there is no need for the item asking whether the placement is perceived as permanent or temporary.

Review: Reinstatement (with change).

Agency: Employment and Training Administration.

Title: Job Corps Placement and Assistance Record.

OMB Number: 205–0035.

Agency Number: ETA 678.

Recordkeeping: The student is not required to retain records; contractor offices and Job Corps centers are required to maintain records for 3 years.

Affected Public: Individuals who separate from Job Corps; Business or other for-profit/Not-for-profit institutions/Federal Government/State, Local or Tribal Government.

Total Respondents: 68,000.

Frequency: one per person.

Total Responses: 68,000.

Average Time per Response: 20 minutes.

Estimated Total Burden Hours: 22,666.

Total Burden Cost (capital/startup): Job Corps initiated electronic collection of placement data in 1994, with installation of 85 master placer PC units at the placement contractor headquarters. The cost was $240,000, including $170,000 for hardware, $50,000 for software and $20,000 for communications costs.

Total Burden Cost (operating/maintaining): The information on the form 678 related to the training completed on a Job Corps center is entered automatically on the form from the database. The remaining information related to the youth's placement is entered electronically by the contracted placement specialist who provides placement services. The estimated annual cost of completing the form for 68,000 separated Job Corps is estimated at $248,183. This includes $29,183 for youth and $255,000 to employers who hire them is for completing the ETA 678 for 68,000 youth is to verify the placements.

Comments submitted in response to this comment request will be

summarized and/or included in the request for Office of Management and Budget approval of the information collection request; they will also become a matter of public record.

Dated: March 31, 2000.

Jackie Roberts,

Acting Deputy Director, Office of Job Corps.

[FR Doc. 00–8445 Filed 4–5–00; 8:45 am]

BILLING CODE 4510–30–M

DEPARTMENT OF LABOR

Employment and Training Administration

Job Corps: Final Finding of No Significant Impact (FONSI) for the New Job Corps Center Located Off of Overlook Terrace Within the Charter Oak Business Park in Hartford, CT

AGENCY: Employment and Training Administration, Department of Labor.

ACTION: Final Finding of No Significant Impact (FONSI) for the New Job Corps Center to be located off of Overlook Terrace within the Charter Oak Business Park in Hartford, Connecticut.

SUMMARY: Pursuant to the Council on Environmental Quality Regulations (40 CFR part 1500–08) implementing procedural provisions of the National Environmental Policy Act (NEPA), the Department of Labor, Employment and Training Administration, Office of Job Corps gives final notice of the proposed construction of a new Job Corps Center off of Overlook Terrace within the Charter Oak Business Park in Hartford, Connecticut, and that this construction will not have a significant adverse impact on the environment. In accordance with 29 CFR 11.11(d) and 40 CFR 1501.4(e)(2), a preliminary FONSI for the new Job Corps Center was published in the October 14, 1999 **Federal Register** (64 FR 55755–55757). No comments were received regarding the preliminary FONSI. ETA has reviewed the conclusion of the environmental assessment (EA), and agrees with the finding of no significant impact. This notice serves as the Final Finding of No Significant Impact for the new Job Corps Center to be located off of Overlook Terrace within the Charter Oak Business Park in Hartford, Connecticut. The preliminary FONSI and the EA are adopted in final with no change.

EFFECTIVE DATE: April 6, 2000.

FOR FURTHER INFORMATION CONTACT: Michael O'Malley, Employment and Training Administration, Department of Labor, 200 Constitution Avenue, NW, Room N–4659, Washington, DC, 20210, (202) 219–5468 ext 115 (this is not a toll-free number).

Dated at Washington, DC, this 29th day of March, 2000.

Richard C. Trigg,

National Director of Job Corps.

[FR Doc. 00–8442 Filed 4–5–00; 8:45 am]

BILLING CODE 4510–30–P

DEPARTMENT OF LABOR

Employment and Training Administration

Job Corps: Final Finding of No Significant Impact (FONSI) for the New Job Corps Center Located at 9 Vandever Avenue, Wilmington, DE

AGENCY: Employment and Training Administration, Department of Labor.

ACTION: Final finding of No Significant Impact (FONSI) for the new Job Corps Center to be located at 9 Vandever Avenue, Wilmington, Delaware.

SUMMARY: Pursuant to the Council on Environmental Quality Regulations (40 CFR part 1500–08) implementing procedural provisions of the National Environmental Policy Act (NEPA), the Department of Labor, Employment and Training Administration, Office of Job Corps gives final notice of the proposed construction of a new Job Corps Center at 9 Vandever Avenue, Wilmington, Delaware, and that this construction will not have a significant adverse impact on the environment. In accordance with 29 CFR 11.11(d) and 40 CFR 1501.4(e)(2), a preliminary FONSI for the new Job Corps Center was published in the November 19, 1999 **Federal Register** (64 FR 63340–63342). No comments were received regarding the preliminary FONSI. ETA has reviewed the conclusion of the environmental assessment (EA), and agrees with the finding of no significant impact. This notice serves as the Final Finding of No Significant Impact for the new Job Corps Center at 9 Vandever Avenue, Wilmington, Delaware. The preliminary FONSI and the EA are adopted in final with no change

EFFECTIVE DATE: April 6, 2000.

FOR FURTHER INFORMATION CONTACT: Michael O'Malley, Employment and Training Administration, Department of Labor, 200 Constitution Avenue, NW, Room N–4659, Washington, DC, 20210, (202) 219–5468 ext 115 (this is not a toll-free number).

Dated at Washington, DC, this 29th day of March, 2000.

Richard C. Trigg,

National Director of Job Corps.

[FR Doc. 00–8441 Filed 4–5–00; 8:45 am]

BILLING CODE 4510–30–P

DEPARTMENT OF LABOR

Pension and Welfare Benefits Administration

[Prohibited Transaction Exemption 2000–15; Exemption Application No. D–10679, et al.]

Grant of Individual Exemptions; General Electric Pension Trust (the Trust)

AGENCY: Pension and Welfare Benefits Administration, Labor.

ACTION: Grant of individual exemptions.

SUMMARY: This document contains exemptions issued by the Department of Labor (the Department) from certain of the prohibited transaction restrictions of the Employee Retirement Income Security Act of 1974 (the Act) and/or the Internal Revenue Code of 1986 (the Code).

Notices were published in the **Federal Register** of the pendency before the Department of proposals to grant such exemptions. The notices set forth a summary of facts and representations contained in each application for exemption and referred interested persons to the respective applications for a complete statement of the facts and representations. The applications have been available for public inspection at the Department in Washington, DC. The notices also invited interested persons to submit comments on the requested exemptions to the Department. In addition the notices stated that any interested person might submit a written request that a public hearing be held (where appropriate). The applicants have represented that they have complied with the requirements of the notification to interested persons. No public comments and no requests for a hearing, unless otherwise stated, were received by the Department.

The notices of proposed exemption were issued and the exemptions are being granted solely by the Department because, effective December 31, 1978, section 102 of Reorganization Plan No. 4 of 1978, 5 U.S.C. App. 1 (1996), transferred the authority of the Secretary of the Treasury to issue exemptions of the type proposed to the Secretary of Labor.

Statutory Findings

In accordance with section 408(a) of the Act and/or section 4975(c)(2) of the Code and the procedures set forth in 29 CFR Part 2570, Subpart B (55 FR 32836, 32847, August 10, 1990) and based upon the entire record, the Department makes the following findings:

(a) The exemptions are administratively feasible;

(b) They are in the interests of the plans and their participants and beneficiaries; and

(c) They are protective of the rights of the participants and beneficiaries of the plans.

General Electric Pension Trust (the Trust), Located in Fairfield, Connecticut

[Prohibited Transaction Exemption 2000–15; Exemption Application Nos. D–10679 through D–10682]

Exemption

The restrictions of sections 406(a), 406(b)(1) and (b)(2) of the Act and the sanctions resulting from the application of section 4975 of the Code, by reason of section 4975(c)(1)(A) through (E) of the Code, shall not apply, as of October 1, 1998, to the lease (the Lease) by the Trust of office space in a certain commercial office building (the Property) to Transport International Pool, Inc. (TIP), a party in interest with respect to employee benefit plans of General Electric Company (GE) and/or an affiliate whose assets are held in the Trust, provided that the following conditions are satisfied:

(1) The Trust was and is represented for all purposes under the Lease by a qualified, independent fiduciary;

(2) The terms and conditions of the Lease are at least as favorable to the Trust as those the Trust could have obtained in a comparable arm's length transaction with an unrelated party;

(3) The rent paid to the Trust under the Lease is no less than the fair market rental value of the office space occupied by TIP, as established by a qualified, independent appraiser;

(4) The independent fiduciary for the Trust reviewed the terms and conditions of the Lease on behalf of the Trust and determined that the Lease was in the best interests of the Trust;

(5) The independent fiduciary monitors and enforces compliance with all of the terms and conditions of the Lease, and of the exemption, throughout the duration of the Lease; and

(6) The independent fiduciary expressly approves any renewal of the Lease, and the rental rate under such renewal is based upon an updated independent appraisal of the office space being leased to TIP (but in no event shall the rental rate be less than that for the preceding period).

EFFECTIVE DATE: The exemption is effective as of October 1, 1998.

For a more complete statement of the facts and representations supporting the Department's decision to grant this exemption, refer to the notice of proposed exemption published on August 26, 1999 at 64 FR 46728.

Written Comments

The Department received two written comments with respect to the notice of proposed exemption.

1. The first comment was submitted by a participant in the GE Pension Plan. This commenter expressed opposition to the proposed exemption on the basis of its retroactive effective date. He stated that the trustees of the Trust had a fiduciary responsibility to obtain an exemption prior to the execution of the Lease, given the conflicts of interest involved.

The applicant responded that the Department has a long-standing policy of granting retroactive exemptions ''if the safeguards necessary for the grant of a prospective exemption were in place at the time of the consummated transaction.'' (See ERISA Technical Release 85–1.) The applicant also responded that the trustees were mindful of their fiduciary responsibility with respect to the Lease. The trustees identified the potential prohibited transaction and appropriately sought legal counsel prior to the execution of the Lease. They were advised to file an exemption application with the Department and to structure the Lease in a manner such that all the necessary safeguards for the grant of an exemption would be in place, including review and approval of the Lease by a qualified, independent fiduciary. Thus, the applicant asserts that all potential conflicts of interest were adequately addressed.

2. The second comment was submitted by the applicant. The applicant wishes to correct certain representations made in the Summary of Facts and Representations (the Summary).

a. First, the applicant notes that, as of the effective date of the exemption, the assets of the Knolls Atomic Laboratories Pension Plan were no longer held in the Trust. (See the first paragraph in Item 1 of the Summary at 64 FR 46728).

b. Second, the applicant notes that the agreed upon tenant improvements in the Lease were substantially completed in November, 1998—not October, 1998, as stated in the first paragraph in Item 6 of the Summary (64 FR 46729). In addition, the third sentence in the third paragraph of Item 6 of the Summary (64 FR 46729) should be revised to read as follows (change in bold): ''In addition, TIP is responsible for any additional taxes levied or assessed that are attributable to TIP's improvements to or personal property within the leased space, its activities within the leased space, or any transactions involving the leased space.''

The Department concurs with the applicant's assertion that the standards for a retroactive exemption have been satisfied. The Department also acknowledges the applicant's corrections to the Summary. Thus, after a careful consideration of the entire record, the Department has determined to grant the exemption as proposed.

FOR FURTHER INFORMATION CONTACT: Ms. Karin Weng of the Department, telephone (202) 219–8881. (This is not a toll-free number.)

Cullen Incorporated Profit Sharing Plan and Trust (the Profit Sharing Plan), Cullen Incorporated Employees Defined Contribution Pension Plan and Trust (the Money Purchase Plan) (Collectively the Plans), Located in Fredericksburg, Virginia

[Prohibited Transaction Exemption 2000–16; Exemption Application No. D–10823 and D–10824]

Exemption

The restrictions of sections 406(a), 406(b)(1) and (b)(2) of the Act and the sanctions resulting from the application of section 4975(a) and (b) of the Code, by reason of section 4975(c)(1)(A) through (E) of the Code, shall not apply to the past sale (the Sale) by the Plan of property located in Fredericksburg, Virginia (the Property) to Robert C. O'Neill (Mr. O'Neill), the trustee of the Plans, President and sole shareholder of the Plan Sponsor, and a party in interest with respect to the Plans, provided that the following conditions are satisfied:

(a) The Sale was a one time transaction for a lump sum cash payment;

(b) The purchase price was the fair market value of the Property as of the date of the Sale;

(c) The Property has been appraised by a qualified, independent real estate appraiser; and

(d) The Plans paid no commissions or other expenses relating to the Sale.

For a more complete statement of the facts and representations supporting the Department's decision to grant this exemption, refer to the notice of proposed exemption published on February 1, 2000 at 65 FR 4851.

EFFECTIVE DATE OF EXEMPTION: The effective date of this exemption is November 6, 1998.

FOR FURTHER INFORMATION CONTACT: J. Martin Jara of the Department, telephone (202) 219–8881. (This is not a toll-free number.)

General Information

The attention of interested persons is directed to the following:

(1) The fact that a transaction is the subject of an exemption under section 408(a) of the Act and/or section 4975(c)(2) of the Code does not relieve a fiduciary or other party in interest or disqualified person from certain other provisions to which the exemptions does not apply and the general fiduciary responsibility provisions of section 404 of the Act, which among other things require a fiduciary to discharge his duties respecting the plan solely in the interest of the participants and beneficiaries of the plan and in a prudent fashion in accordance with section 404(a)(1)(B) of the Act; nor does it affect the requirement of section 401(a) of the Code that the plan must operate for the exclusive benefit of the employees of the employer maintaining the plan and their beneficiaries;

(2) These exemptions are supplemental to and not in derogation of, any other provisions of the Act and/or the Code, including statutory or administrative exemptions and transactional rules. Furthermore, the fact that a transaction is subject to an administrative or statutory exemption is not dispositive of whether the transaction is in fact a prohibited transaction; and

(3) The availability of these exemptions is subject to the express condition that the material facts and representations contained in each application accurately describes all material terms of the transaction which is the subject of the exemption.

Signed at Washington, D.C., this 30th day of March, 2000.

Ivan Strasfeld,

Director of Exemption Determination, Pension and Welfare Benefits Administration, U.S. Department of Labor.

[FR Doc. 00–8447 Filed 4–5–00; 8:45 am]

BILLING CODE 4510–29–P

FEDERAL MINE SAFETY AND HEALTH REVIEW COMMISSION

Privacy Act of 1974; System of Records

AGENCY: Federal Mine Safety and Health Review Commission.

ACTION: Notice of new, altered, and deleted systems of records.

SUMMARY: On May 14, 1998, the President directed executive departments and agencies to, among other things, review all systems of records subject to the Privacy Act of 1974, as amended, 5 U.S.C. 552a (''Privacy Act'') for accuracy, completeness and to ensure that all routine uses are needed and consistent with the purposes for which the records were collected in each system. The Federal Mine Safety and Health Review Commission (''Commission'' or ''FMSHRC'') has conducted such a review, and now publishes this notice of new, altered, and deleted systems of records.

DATES: Comments on the proposed routine uses for the systems of records included in this notice must be received by the Commission by May 8, 2000. The Commission filed a report describing the new, altered, and deleted systems of records covered by this notice with the Chair of the Committee on Governmental Affairs of the Senate, the Chair of the Committee on Government Reform of the House of Representatives, and the Administrator of the Office of Information and Regulatory Affairs, Office of Management and Budget (''OMB'') on March 30, 2000. The changes described in this notice will become effective after the 40-day period for OMB review expires on May 16, 2000, unless OMB gives specific notice within the 40 days that the changes are not approved for implementation. The new routine uses that are the subject of this notice will take effect on May 16, 2000 unless modified by a subsequent notice to incorporate comments received from the public.

ADDRESSES: All comments on the proposed routine uses should be mailed to Richard L. Baker, FMSHRC Privacy Act Officer and Executive Director, Federal Mine Safety and Health Review Commission, 1730 K Street, NW., 6th Floor, Washington DC 20006.

FOR FURTHER INFORMATION CONTACT: Richard L. Baker, FMSHRC Privacy Act Officer and Executive Director, Federal Mine Safety and Health Review Commission, 1730 K Street, NW, 6th Floor, Washington, DC 20006, telephone 202–653–5610 (202–566–2673 for TDD Relay). These are not toll-free numbers.

SUPPLEMENTARY INFORMATION: The Privacy Act applies to information about individuals that may be retrieved by a unique identifier associated with each individual, such as a name or social security number. The information about each individual is called a ''record'' and the system, whether manual or computer-driven, is called a ''system of records.'' A system is considered altered whenever certain fundamental changes are made to the system, such as whenever certain disclosures, called ''routine uses,'' are changed.

In a memorandum dated May 14, 1998, President Clinton directed executive departments and agencies to conduct a thorough review of all agency system of records for accuracy and completeness. The President specifically directed agencies to consider changes in technology, function, and organization that may have made the systems out-of-date and to review the routine uses published in the system notices to make sure they continue to be necessary and compatible with the purposes for which the information is collected. He also directed agencies to identify systems that may not have been described in a notice published in the **Federal Register** and to publish notices for any changes to the agency systems of records.

In its review, the Commission determined that two of its systems of records are no longer relevant and necessary to accomplish an agency purpose, that the remaining three systems require revision, and that three additional systems of records should be identified and included in the Commission's systems of records. The two systems of records that are no longer relevant and necessary to accomplish an agency purpose are: (1) FMSHRC–04, ''Property Management System;'' and (2) FMSHRC–05, ''Administrative Law Judge Caseload Report.'' See 49 FR 30668, 30669–70 (July 31, 1984). The property management system of records (FMSHRC–04) contained information concerning the description, value and location of furnishings and equipment. The Commission has found it unnecessary to continue to maintain such records because furnishings and equipment are no longer assigned to Commission employees and members. In addition, the Administrative Law Judge caseload report (FMSHRC–05) is no longer used by the Commission. Accordingly, the Commission is deleting these systems.

The Commission proposes revisions to the three remaining systems in order to update them. The Commission proposes changing the system name of FMSHRC–01 from ''Payroll records'' to ''Pay and leave records,'' in order to more accurately describe the records included in this system, and to revise the routine uses of records maintained in this system. In addition, the Commission proposes to change the

name of FMSHRC–02 from ''General finance and accounting records'' to ''General finance, accounting and travel records;'' to revise that system to include travel records and records pertaining to usage of Westlaw and usage of government credit cards for administrative supply purchases; to update other categories of records included in this system; and to revise the routine uses of records maintained in this system. The Commission also proposes revising FMSHRC–03 to update and more accurately describe categories of records included in this system. Finally, the Commission proposes to update its general statement of routine uses, formerly set forth in the Appendix, 49 FR at 306670.

The Commission identified three systems of records, not previously identified, in which information by individual name or identifier is relevant and necessary to an agency purpose. Specifically, those systems include: (1) Biographical data files on presidential appointees; (2) federal fare subsidy benefit program records; and (3) the Commission's official case files filed according to and retrieved by the name of an individually-named miner. As to the first and second systems, information is retrieved by using an individual's name or other identifying link. As to the third system, information is retrieved from Commission adjudicatory case files through the use of a docket number or case name. In the large majority of cases before the Commission, case names are derived from a mine operator's name or a union. In a small percentage of cases, cases are identified by an individual miner's name, such as when a miner brings a discrimination complaint in an individual capacity under 30 U.S.C. 815(c)(3), or when the Secretary of Labor takes an enforcement action against a miner under 30 U.S.C. 820(c) or 820(g). Included in the third system of records are only those official case files filed according to and retrieved by an individually named miner's name. Accordingly, the Commission proposes adding these three new systems.

In sum, the Commission proposes identifying its systems as: FMSHRC–01, Pay and leave records; FMSHRC–02, General finance, accounting, and travel records; FMSHRC–03, General informal personnel files; FMSHRC–04, Biographical data file-presidential appointees; FMSHRC–05, Federal fare subsidy benefit program records; and FMSHRC–06, Official case files filed according to and retrieved by name of individually-named miner. The systems of records are published in their entirety below.

Systems of Records

Table of Contents

FMSHRC–01 Pay and leave records
FMSHRC–02 General finance, accounting, and travel records
FMSHRC–03 General informal personnel files
FMSHRC–04 Biographical data file-presidential appointees
FMSHRC–05 Federal fare subsidy benefit program records
FMSHRC–06 Official case files filed according to and retrieved by name of individually-named miner

General Statement of Routine Uses

In addition to the disclosures generally permitted under 5 U.S.C. 552a(b), the Commission may disclose a record or information in a Privacy Act system of records under 5 U.S.C. 552a(b)(3) as provided below.

(1) Routine use for disclosure to the Department of Justice for use in litigation:

To the Department of Justice when: (a) FMSHRC or any component thereof; or (b) any employee of FMSHRC in his or her official capacity; or (c) any employee of FMSHRC in his or her individual capacity where the Department of Justice has agreed to represent the employee; or (d) the United States Government, is a party to litigation or has an interest in such litigation, and by careful review, FMSHRC determines that the records are both relevant and necessary to the litigation and the use of such records by the Department of Justice is therefore deemed by FMSHRC to be a purpose that is compatible with the purpose for which FMSHRC collected the records.

(2) Routine use for other disclosures in litigation:

To a court or adjudicative body in a proceeding when: (a) FMSHRC or any component thereof; or (b) any employee of FMSHRC in his or her official capacity; or (c) any employee of FMSHRC in his or her individual capacity where FMSHRC has agreed to represent the employee; or (d) the United States Government, is a party to litigation or has an interest in such litigation, and by careful review, FMSHRC determines that the records are both relevant and necessary to the litigation and the use of such records is therefore deemed by FMSHRC to be a purpose that is compatible with the purpose for which FMSHRC collected the records.

(3) Routine use for law enforcement purposes:

When a record on its face, or in conjunction with other records, indicates a violation or potential violation of law, whether civil, criminal or regulatory in nature, and whether arising by general statute or particular program statute, or by regulation, rule, or order issued pursuant thereto, disclosure may be made to the appropriate agency, whether federal, foreign, state, local, or tribal, or other public authority responsible for enforcing or implementing the statute, or rule, regulation, or order issued pursuant thereto, if the information disclosed is relevant to any enforcement, regulatory, investigative or prosecutive responsibility of the receiving entity.

(4) Routine use for disclosure to a member of Congress at the request of a constituent:

To a member of Congress or to a Congressional staff member in response to an inquiry of the Congressional office made at the written request of the constituent about whom the record is maintained.

(5) Routine use for records management purposes:

Records from a Privacy Act system of records may be disclosed to the National Archives and Records Administration or to the General Services Administration for records management inspections conducted under 44 U.S.C. 2904 and 2906.

(6) Routine use for disclosure to contractors under 5 U.S.C. 552a(m):

Disclosure may be made to agency contractors, grantees, or volunteers who have been engaged to assist FMSHRC in the performance of a contract service related to a Privacy Act system of records and who need to have access to the records in order to perform the activity. Recipients shall be required to comply with the requirements of the Privacy Act.

(7) Routine use to the Department of Health and Human Services (''HHS'') parent locator system for finding parents who do not pay child support:

The name and current address of record of an individual may be disclosed from a Privacy Act system of record to the parent locator service of HHS or authorized persons defined by Public Law 93–647, 42 U.S.C. 653.

(8) Routine use for use in employment, clearances, licensing, contract, grant or other benefits decisions by FMSHRC:

Disclosure may be made to federal, state, local or foreign agency maintaining civil, criminal, or other relevant enforcement records, or other pertinent records, or to another public authority or professional organization, if necessary to obtain information relevant to an investigation concerning the retention of an employee or other personnel action, the retention of a

security clearance, the letting of a contract, or the issuance or retention of a grant, or other benefit.

(9) For use in employment, clearances, licensing, contract, grant or other benefit decisions by other than FMSHRC:

Disclosure may be made to a federal, state, local, foreign, or tribal or other public authority of the fact that a Privacy Act system of records contains information relevant to the retention of an employee, the retention of a security clearance, the letting of a contract, or the issuance or retention of a license, grant, or other benefit. The other agency or licensing organization may then make a request supported by the written consent of the individual for the entire record if it so chooses. No disclosure will be made unless the information has been determined to be sufficiently reliable to support a referral to another office within FMSHRC or to another federal agency for criminal, civil, administrative, personnel, or regulatory action.

(10) For purposes of financial audit or internal control:

Disclosure may be made to a federal agency or to members of the private sector under contract with FMSHRC in the performance of a financial audit or evaluation of internal control, pursuant to 31 U.S.C. 501 *et seq.*

FMSHRC–01

SYSTEM NAME:

Pay and Leave Records

SYSTEM LOCATION:

(1) FMSHRC at 1730 K Street, NW, 6th Floor, Washington, DC 20006; (2) United States Department of Treasury's Bureau of Public Debt (''BPD'') at PESO Branch-DPM, 200 Third Street, Room 206–1, Parkersburg, WV 26106; (3) United States Department of Agriculture's National Finance Center (''NFC'') at P.O. Box 60000, New Orleans, LA 70160. BPD and NFC hold records for FMSHRC under interagency agreement.

CATEGORIES OF INDIVIDUALS COVERED BY THE SYSTEM:

Current and former employees and members of FMSHRC.

CATEGORIES OF RECORDS IN THE SYSTEM:

Various payroll and leave records including, among other documents, time and attendance cards; payment vouchers; comprehensive listing of employees; health benefit records; requests for deductions; tax forms and W–2 forms; overtime requests; leave data; and retirement records. Records are used by FMSHRC, BPD and NFC to maintain adequate payroll and leave information for FMSHRC employees, and otherwise by FMSHRC, BPD, and NFC employees who have a need for the record in the performance of their duties.

AUTHORITY FOR MAINTENANCE OF THE SYSTEM:

30 U.S.C. 823, 823a, 824; 5 U.S.C. 5501 *et seq.*; 31 U.S.C. ''Money and Finance,'' generally.

PURPOSE(S):

Information in this system is used to prepare payroll, to meet Government payroll recordkeeping and reporting requirements, and to retrieve and supply payroll and leave information as required for Commission needs.

ROUTINE USES OF RECORDS MAINTAINED IN THE SYSTEM, INCLUDING CATEGORIES OF USERS AND THE PURPOSES OF SUCH USES:

Disclosures may be made under this system:

1. To other Government agencies, commercial or credit organizations, or to prospective employers to verify employment.

2. To federal, state, and local taxing authorities concerning compensation to employees or to contractors; to Office of Personnel Management, Department of the Treasury, and other federal agencies concerning pay, benefits, and retirement of employees; to federal employees' health benefits carriers concerning health insurance of employees; to financial organizations concerning employee allotments and net pay to checking accounts; to state human resource offices administering unemployment compensation programs; and to heirs, executors, and legal representatives of beneficiaries.

3. To federal agencies or to members of the private sector under contract with FMSHRC, in the performance of financial audits or evaluation of internal control;

4. To the Office of Child Support Enforcement, Administration for Children and Families, Department of Health and Human Services Federal Parent Locator Service (''FPLS'') and Federal Tax Offset System for use in locating individuals and identifying their income sources to establish paternity, establish and modify orders of support and for enforcement action;

5. To the Office of Child Support Enforcement for release to the Social Security Administration for verifying social security numbers in connection with the operation of the FPLS by the Office of Child Support Enforcement;

6. To the Office of Child Support Enforcement for release to the Department of Treasury for purposes of administering the Earned Income Tax Credit Program (section 32, Internal Revenue Code of 1986) and verifying a claim with respect to employment in a tax return;

Additional routine uses are listed in the General Statement of Routine Uses.

DISCLOSURE TO CONSUMER REPORTING AGENCIES:

Disclosures may be made from this system to ''consumer reporting agencies'' as defined in the Fair Credit Reporting Act (15 U.S.C. 1681a(f)) or the Federal Claims Collection Act of 1966 (31 U.S.C. 3701(a)(3)) in accordance with 31 U.S.C. 3711(f).

POLICIES AND PRACTICES FOR STORING, RETRIEVING, ACCESSING, RETAINING, AND DISPOSING OF RECORDS IN THE SYSTEM:

STORAGE:

Duplicate records are stored at FMSHRC's office in Washington, DC, and at the offices of the BPD and NFC. FMSHRC's records are paper.

RETRIEVABILITY:

Social Security number, and name.

SAFEGUARDS:

Paper records in FMSHRC's office in Washington, DC are stored in locked file cabinets and are released only to authorized personnel. Access to FMSHRC's office in Washington, DC may be gained only by using an electronically keyed number, which is provided only to FMSHRC personnel and is changed on a regular basis.

RETENTION AND DISPOSAL:

Retention and disposal of records is in accordance with the National Archives and Records Administration's General Records Schedule requirements for payroll-related records.

SYSTEM MANAGER(S) AND ADDRESS:

Records Management Officer, Federal Mine Safety and Health Review Commission, Room 6033, 1730 K Street, NW, Washington, DC 20006.

NOTIFICATION PROCEDURE:

Contact Executive Director or refer to FMSHRC regulations contained in 29 CFR part 2705.

RECORD ACCESS PROCEDURES:

Contact Executive Director or refer to FMSHRC regulations contained in 29 CFR part 2705.

CONTESTING RECORD PROCEDURES:

Contact Executive Director or refer to FMSHRC regulations contained in 29 CFR part 2705.

RECORD SOURCE CATEGORIES:

The subject individual; FMSHRC.

EXEMPTIONS CLAIMED FOR THE SYSTEM:

None.

FMSHRC–02

SYSTEM NAME:

General Finance, Accounting, and Travel Records

SYSTEM LOCATION:

(1) FMSHRC at 1730 K Street, NW, Washington, DC 20006; (2) BPD at PESO Branch-DPM, 200 Third Street, Room 206–1, Parkersburg, WV 26106. BPD holds records for FMSHRC under interagency agreement.

CATEGORIES OF INDIVIDUALS COVERED BY THE SYSTEM:

Current and former employees and members of FMSHRC and persons who provide supplies or services to FMSHRC by contract or purchase order.

CATEGORIES OF RECORDS IN THE SYSTEM:

Various accounting records including, among other documents, vendor identification numbers for electronic payments, vendor registers and vendor payments; records pertaining to usage of Government credit cards for administrative supplies purchases; records pertaining to Westlaw usage; travel authorizations; travel vouchers, which include receipts, dates, expenses, amounts advanced, amounts claimed, and amounts reimbursed.

AUTHORITY FOR MAINTENANCE OF THE SYSTEM:

30 U.S.C. 823, 823a, 824; 31 U.S.C. ''Money and Finance,'' generally; 5 U.S.C. 5701 *et seq.*; 40 U.S.C. 471 *et seq.*

PURPOSE(S):

The information in this system is used to provide records of reimbursement to and collections from employees for expenses incurred while in official travel status, to provide payments to vendors and other Government agencies, to maintain control over the collection and disbursement of FMSHRC funds, to prepare reports, and to assist in any financial audits or evaluation of internal control.

ROUTINE USES OF RECORDS MAINTAINED IN THE SYSTEM, INCLUDING CATEGORIES OF USERS AND THE PURPOSES OF SUCH USES:

Disclosures may be made under this system:

1. To federal agencies or to members of the private sector under contract with FMSHRC, in the performance of financial audits or evaluation of internal control;
2. To the Internal Revenue Service for investigation;
3. To private attorneys, pursuant to power of attorney;
4. To members of Congress, to FMSHRC personnel, and to other agencies for budgetary and reporting purposes;
5. See General Statement of Routine Uses.

DISCLOSURE TO CONSUMER REPORTING AGENCIES:

Disclosures may be made from this system to ''consumer reporting agencies'' as defined in the Fair Credit Reporting Act (15 U.S.C. 1681a(f)) or the Federal Claims Collection Act of 1966 (31 U.S.C. 3701(a)(3)) in accordance with 31 U.S.C. 3711(f).

POLICIES AND PRACTICES FOR STORING, RETRIEVING, ACCESSING, RETAINING, AND DISPOSING OF RECORDS IN THE SYSTEM:

STORAGE:

Paper records are stored at FMSHRC's office in Washington, DC; some duplicate records are stored at the BPD.

RETRIEVABILITY:

Manual by name, social number, or assigned password number.

SAFEGUARDS:

Paper records in FMSHRC's office in Washington, DC are stored in locked file cabinets and are released only to authorized personnel. Access to FMSHRC's office in Washington, DC may be gained only by using an electronically keyed number, which is provided only to FMSHRC personnel and is changed on a regular basis.

RETENTION AND DISPOSAL:

In accordance with the General Records Schedules issued by the National Archives and Records Administration pertaining to accounting, procurement, and travel records.

SYSTEM MANAGER(S) AND ADDRESS:

Records Management Officer, Federal Mine Safety and Health Review Commission, Room 6033, 1730 K Street, NW, Washington, DC 20006.

NOTIFICATION PROCEDURE:

Contact Executive Director or refer to FMSHRC regulations contained in 29 CFR part 2705.

RECORD ACCESS PROCEDURES:

Contact Executive Director or refer to FMSHRC regulations contained in 29 CFR part 2705.

CONTESTING RECORD PROCEDURES:

Contact Executive Director or refer to FMSHRC regulations contained in 29 CFR part 2705.

RECORD SOURCE CATEGORIES:

The subject individual; FMSHRC.

EXEMPTIONS CLAIMED FOR THE SYSTEM:

None.

FMSHRC–03

SYSTEM NAME:

General Informal Personnel Files

SYSTEM LOCATION:

FMSHRC at 1730 K Street, NW, 6th Floor, Washington, DC 20006.

CATEGORIES OF INDIVIDUALS COVERED BY THE SYSTEM:

Current and former employees and members of FMSHRC.

CATEGORIES OF RECORDS IN THE SYSTEM:

General personnel information including position descriptions; performance appraisals; notifications of personnel action (SF–50's); employment history; home address; date of birth; grade and salary; age; social security number; resumes and SF 171's; OF 612's; letters of recommendation or for performance recognition; and other records relating to insurance coverage, health benefits, and dates service commenced and ended.

AUTHORITY FOR MAINTENANCE OF THE SYSTEM:

30 U.S.C. 823, 823a, 824; 44 U.S.C. 3101 *et seq.*; 5 U.S.C. ''Government Organization and Employees,'' generally.

PURPOSE(S):

Information in this system is used to meet Government personnel recordkeeping and reporting requirements, and to retrieve personnel information as required for FMSHRC needs.

Routine uses of records maintained in the system, including categories of users and the purposes of such uses:

1. See General Statement of Routine Uses.

DISCLOSURE TO CONSUMER REPORTING AGENCIES:

Disclosures may be made from this system to ''consumer reporting agencies'' as defined in the Fair Credit Reporting Act (15 U.S.C. 1681a(f)) or the Federal Claims Collection Act of 1966 (31 U.S.C. 3701(a)(3)) in accordance with 31 U.S.C. 3711(f).

POLICIES AND PRACTICES FOR STORING, RETRIEVING, ACCESSING, RETAINING, AND DISPOSING OF RECORDS IN THE SYSTEM:

STORAGE:

Paper records are stored at FMSHRC's office in Washington, DC.

RETRIEVABILITY:

Manual by name.

SAFEGUARDS:

Paper records in FMSHRC's office in Washington, DC are stored in locked file cabinets and are released only to

authorized personnel. Access to FMSHRC's office in Washington, DC may be gained only by using an electronically keyed number, which is provided only to FMSHRC personnel and is changed on a regular basis.

RETENTION AND DISPOSAL:

In accordance with the General Records Schedules issued by the National Archives and Records Administration and FMSHRC's Records Management Handbook.

SYSTEM MANAGER(S) AND ADDRESS:

Records Management Officer, Federal Mine Safety and Health Review Commission, Room 6033, 1730 K Street, NW, Washington, DC 20006.

NOTIFICATION PROCEDURE:

Contact Executive Director or refer to FMSHRC regulations contained in 29 CFR part 2705.

RECORD ACCESS PROCEDURES:

Contact Executive Director or refer to FMSHRC regulations contained in 29 CFR part 2705.

CONTESTING RECORD PROCEDURES:

Contact Executive Director or refer to FMSHRC regulations contained in 29 CFR part 2705.

RECORD SOURCE CATEGORIES:

The subject individual; FMSHRC.

EXEMPTIONS CLAIMED FOR THE SYSTEM:

None.

FMSHRC–04

SYSTEM NAME:

Biographical Data File—Presidential Appointees

SYSTEM LOCATION:

FMSHRC at 1730 K Street, NW, 6th Floor, Washington, DC 20006

CATEGORIES OF INDIVIDUALS COVERED BY THE SYSTEM:

Present and former Presidential appointees to FMSHRC positions.

CATEGORIES OF RECORDS IN THE SYSTEM:

Records may include biographical sketches and photographs.

AUTHORITY FOR MAINTENANCE OF THE SYSTEM:

30 U.S.C. 823; 44 U.S.C. 3101 *et seq.*

PURPOSE(S):

To document and provide information regarding pertinent aspects of the personal and professional history of FMSHRC's Commissioners.

ROUTINE USES OF RECORDS MAINTAINED IN THE SYSTEM, INCLUDING CATEGORIES OF USERS AND THE PURPOSES OF SUCH USES:

Disclosures may be made under this system:

1. To the public upon request unless it is determined that release of the specific information in the context of that particular request would constitute an unwarranted invasion of personal privacy;
2. To Congress to answer inquiries regarding Commissioners;
3. See General Statement of Routine Uses.

DISCLOSURE TO CONSUMER REPORTING AGENCIES:

None.

POLICIES AND PRACTICES FOR STORING, RETRIEVING, ACCESSING, RETAINING, AND DISPOSING OF RECORDS IN THE SYSTEM:

STORAGE:

Paper in file cabinets.

RETRIEVABILITY:

Manual by name.

SAFEGUARDS:

Maintained in file cabinets under the surveillance of office personnel. Access to FMSHRC's office in Washington, DC may be gained only by using an electronically keyed number, which is provided only to FMSHRC personnel and is changed on a regular basis.

RETENTION AND DISPOSAL:

In accordance with the General Records Schedule and FMSHRC's Records Management Handbook, records are transferred to the National Archives and Records Administration in 3-year blocks when the most recent record in a block is 3 years old. Copies are maintained permanently with FMSHRC.

SYSTEM MANAGER(S) AND ADDRESS:

Records Management Officer, Federal Mine Safety and Health Review Commission, Room 6033, 1730 K Street, NW, Washington, DC 20006.

NOTIFICATION PROCEDURE:

Contact Executive Director or refer to FMSHRC regulations contained in 29 CFR part 2705.

RECORD ACCESS PROCEDURES:

Contact Executive Director or refer to FMSHRC regulations contained in 29 CFR part 2705.

CONTESTING RECORD PROCEDURES:

Contact Executive Director or refer to FMSHRC regulations contained in 29 CFR part 2705.

RECORD SOURCE CATEGORIES:

The subject individual.

EXEMPTIONS CLAIMED FOR THE SYSTEM:

None.

FMSHRC–05

SYSTEM NAME:

Federal Fare Subsidy Benefit Program Records

SYSTEM LOCATION:

FMSHRC at 1730 K Street, NW, 6th Floor, Washington, DC 20006.

CATEGORIES OF INDIVIDUALS COVERED BY THE SYSTEM:

Employees and members of FMSHRC who participate in the federal fare subsidy benefit program.

CATEGORIES OF RECORDS IN THE SYSTEM:

Various records required to administer the federal fare subsidy benefit program, which include information regarding a participant's mode of transportation, monthly cost of transportation, and reports of disbursements.

AUTHORITY FOR MAINTENANCE OF THE SYSTEM:

The Federal Employees Clean Air Incentives Act (section 2(a) of Pub. L. 103–172, found at 5 U.S.C. 7905); the Transportation Equity Act for the 21st Century (section 9010 of Pub. L. 105–178, found at 112 Stat. 507 (1998)); 30 U.S.C. 823, 823a, 824.

PURPOSE(S):

Information in this system is used to administer the federal fare subsidy benefit program, to meet Government recordkeeping requirements, and to retrieve and supply transit information as required for FMSHRC needs.

ROUTINE USES OF RECORDS MAINTAINED IN THE SYSTEM, INCLUDING CATEGORIES OF USERS AND THE PURPOSES OF SUCH USES:

The FMSHRC does not normally disclose records from this system of records except to those FMSHRC employees who have a need for such records in the performance of their duties. However, in the event it is appropriate, records may be disclosed as provided in the General Statement of Routine Uses.

DISCLOSURE TO CONSUMER REPORTING AGENCIES:

None.

POLICIES AND PRACTICES FOR STORING, RETRIEVING, ACCESSING, RETAINING, AND DISPOSING OF RECORDS IN THE SYSTEM:

STORAGE:

Paper in locked file cabinets.

RETRIEVABILITY:

Manual by name.

SAFEGUARDS:

Transit benefit program records are stored in a locked file cabinet. Access to

FMSHRC's office in Washington, DC may be gained only by using an electronically keyed number, which is provided only to FMSHRC personnel and is changed on a regular basis.

RETENTION AND DISPOSAL:

Retention and disposal of records is in accordance with National Archives and Records Administration's General Records Schedule and FMSHRC's Records Management Handbook. System manager(s) and address: Records Management Officer, Federal Mine Safety and Health Review Commission, Room 6033, 1730 K Street, NW, Washington, DC 20006.

NOTIFICATION PROCEDURE:

Contact Executive Director or refer to FMSHRC regulations contained in 29 CFR part 2705.

RECORD ACCESS PROCEDURES:

Contact Executive Director or refer to FMSHRC regulations contained in 29 CFR part 2705.

CONTESTING RECORD PROCEDURES:

Contact Executive Director or refer to FMSHRC regulations contained in 29 CFR part 2705.

RECORD SOURCE CATEGORIES:

FMSHRC employees who are participants in the Transit Benefit Program.

EXEMPTIONS CLAIMED FOR THE SYSTEM:

None.

FMSHRC–06

SYSTEM NAME:

Official Case Files Filed according to and Retrieved by Name of Individually-Named Miner.

SYSTEM LOCATION:

FMSHRC at 1730 K Street, NW, 6th Floor, Washington, DC 20006.

CATEGORIES OF INDIVIDUALS COVERED BY THE SYSTEM:

Individually-named miners whose names are used for filing and retrieval purposes of the official case file of cases arising under the Federal Mine Safety and Health Act of 1977, 30 U.S.C. 801 *et seq.* (1994) (Mine Act). Official case files are retrieved by reference to docket number, and in some instances, by case name. In the large majority of cases before FMSHRC, case names are derived from the name of a mine operator or a union. In a small percentage of cases, cases are identified by an individual miner's name, such as when a miner brings a discrimination complaint in an individual capacity under 30 U.S.C. 815(c)(3), or when the Secretary of Labor takes an enforcement action against a miner under 30 U.S.C. 820(c) or 820(g). This system of records covers only those official case files filed according to and retrieved by an individually-named miner's name.

CATEGORIES OF RECORDS IN THE SYSTEM:

Records in this system include documents and pleadings filed by parties, hearing transcripts and exhibits, transcripts of oral argument, and decisions and orders issued by FMSHRC.

AUTHORITY FOR MAINTENANCE OF THE SYSTEM:

30 U.S.C. 823, 823a; 44 U.S.C. 3101 *et seq.*

PURPOSE(S):

FMSHRC provides trial and appellate review of cases arising under the Mine Act. Official case files store documents used by FMSHRC in its consideration and review of such cases, and provide information regarding such cases.

ROUTINE USES OF RECORDS MAINTAINED IN THE SYSTEM, INCLUDING CATEGORIES OF USERS AND THE PURPOSES OF SUCH USES:

Disclosures may be made under this system:

1. To the public pursuant to 29 CFR 2702.4 or upon request unless it is determined that the release of specific information in the context of a particular case would constitute an unwarranted invasion of personal privacy;

2. See General Statement of Routine Uses.

DISCLOSURE TO CONSUMER REPORTING AGENCIES:

None.

POLICIES AND PRACTICES FOR STORING, RETRIEVING, ACCESSING, RETAINING, AND DISPOSING OF RECORDS IN THE SYSTEM:

STORAGE:

Paper records in file folders.

RETRIEVABILITY:

By case name or docket number.

SAFEGUARDS:

File folders are maintained in file cabinets. Access to FMSHRC's office in Washington, DC may be gained only by using an electronically keyed number, which is provided only to FMSHRC personnel and is changed on a regular basis.

RETENTION AND DISPOSAL:

In accordance with the General Records Schedule and FMSHRC's Records Management Handbook, the cut-off date for files is at the close of the case. Files are retired to the Washington National Records Center 1 year after the cutoff, and destroyed 7 years after the cutoff.

SYSTEM MANAGER(S) AND ADDRESS:

Records Management Officer, Federal Mine Safety and Health Review Commission, 1730 K Street, NW, Washington, DC 20006.

NOTIFICATION PROCEDURE:

Contact Executive Director or refer to FMSHRC regulations contained in 29 CFR part 2705.

RECORD ACCESS PROCEDURES:

Contact Executive Director or refer to FMSHRC regulations contained in 29 CFR part 2705.

CONTESTING RECORD PROCEDURES:

Contact Executive Director or refer to FMSHRC regulations contained in 29 CFR part 2705.

RECORD SOURCE CATEGORIES:

The parties, their representatives, FMSHRC.

EXEMPTIONS CLAIMED FOR THE SYSTEM:

None.

Dated: March 30, 2000.

Mary Lu Jordan,

Chairman, Federal Mine Safety and Health Review Commission.

[FR Doc. 00–8507 Filed 4–5–00; 8:45 am]

BILLING CODE 6735–01–P

NATIONAL SCIENCE FOUNDATION

Special Emphasis Panel for Geosciences: Notice of Meeting

In accordance with the Federal Advisory Committee Act (Pub. L. 92–463, as amended), the National Science Foundation announces the following meeting.

Name: Special Emphasis Panel for Geosciences (1756).

Date/Time: May 8–12, 2000, 8–5 p.m.

Place: National Science Foundation, 4201 Wilson Blvd., Rooms 310, 320, 330, and 360, Arlington, VA.

Type of Meeting: Closed.

Contact Person: H. Lawrence Clark, Acting Section Head, Ocean Sciences Research Section, National Science Foundation, 4201 Wilson Blvd., Arlington, VA 22230, Telephone (703) 306–1582.

Purpose of Meeting: To provide advice and recommendations concerning proposals submitted to NSF for financial support.

Agenda: To review and evaluate the Ocean Sciences Research Programs (OSRS) as part of the selection process for awards.

Reason for Closing: The proposal being reviewed includes information of a proprietary or confidential nature, including technical information; financial data, such as salaries; and personal information concerning individuals associated with the

proposals. These matters are exempt under 5 U.S.C. 552b(c), (4) and (6) of the Government in The Sunshine Act.

Dated: April 3, 2000.

Karen J. York,

Committee Management Officer.

[FR Doc. 00–8493 Filed 4–5–00; 8:45 am]

BILLING CODE 7555–01–M

NATIONAL SCIENCE FOUNDATION

Special Emphasis Panel for Geosciences: Notice of Meeting

In accordance with the Federal Advisory Committee Act (Pub. L. 92–463, as amended), the National Science Foundation announces the following meeting.

Name: Special Emphasis Panel for Geosciences (1756).

Date/Time: April 27–28, 2000, 8 a.m.–5 p.m.

Place: National Science Foundation, 4201 Wilson Blvd., Room 340, Arlington, VA.

Type of Meeting: Closed.

Contact Person: Bilal Haq, Program Director, Marine Geology & Geophysics, Ocean Sciences Research Section, National Science Foundation, 4201 Wilson Blvd. Arlington, VA 22230. (703) 306–1587.

Purpose of Meeting: To provide advice and recommendations concerning proposals submitted to NSF for financial support.

Agenda: To review and evaluate the MARGINS Program as part of the selection process for awards.

Reason for Closing: The proposal being reviewed includes information of a proprietary or confidential nature, including technical information, financial data, such as salaries; and personal information concerning individuals associated with the proposals. These matters are exempt under 5 U.S.C. 552b(c), (4) and (6) of the Government in The Sunshine Act.

Dated: April 3, 2000.

Karen J. York,

Committee Management Officer.

[FR Doc. 00–8494 Filed 4–5–00; 8:45 am]

BILLING CODE 7555–01–M

NATIONAL SCIENCE FOUNDATION

Advisory Committee for Polar Programs; Notice of Meeting

In accordance with the Federal Advisory Committee Act (Pub. L. 92–463, as amended), the National Science foundation announces the following meeting:

Name: Advisory Committee for Polar Programs (1130).

Date/Time: May 3–5, 2000, 8:30 A.M. to 5 P.M.

Place: NSF, 4201 Wilson Blvd., Room 630/730, Arlington, VA 22230.

Type of Meeting: Closed.

Contact Persons: Dr. Michael Ledbetter, Program Manager, Arctic System Science, Room 755S, National Science Foundation, 4201 Wilson Blvd, Arlington, VA 22230. (703) 306–1029.

Purpose of Meeting: To provide advice and recommendations concerning proposals submitted to NSF for financial support.

Agenda: To review and evaluate research proposals submitted to the Surface Heat Budget Phase 3 (NSF 00–19) as part of the selection process for awards.

Reason for Closing: The proposals being reviewed include information of a proprietary or confidential nature, including technical information; financial data, such as salaries; and personal information concerning individuals associated with the proposals. These matters are exempt under 5 U.S.C. 552b(c), (4) and (6) of the Government in the Sunshine Act.

Dated: April 3, 2000.

Karen J. York,

Committee Management Officer.

[FR Doc. 00–8497 Filed 4–5–00; 8:45 am]

BILLING CODE 7555–01–M

NATIONAL SCIENCE FOUNDATION

Advisory Committee for Small Business Industrial Innovation; Notice of Meeting

In accordance with the Federal Advisory Committee Act (Pub. L. 92–463, as amended), the National Science Foundation announces the following meeting.

Name: Advisory Committee for Small Business Industrial Innovation (61).

Date/Time: April 12, 2000; 8:30 a.m. to 5 p.m.

Place: National Science Foundation, 4201 Wilson Blvd., Room 130, Arlington, VA.

Type of Meeting: Closed.

Contact person: Joseph Hennessey, Program Manager, Small Business Innovation Research and Small Business Technology Transfer Programs, Room 590, Division of Design, Manufacturing, and Industrial Innovation, National Science Foundation, 4201 Wilson Boulevard, VA 22230. Telephone (703) 306–1395 x 5283.

Purpose of Meeting: To provide advice and recommendations concerning proposals submitted to NSF for financial support.

Agenda: To review and evaluate proposals submitted to the Small Business Innovation Research (SBIR) and Small Business Technology Transfer (STTR) Programs as part of the selection process for awards.

Reason for Closing: The proposals being reviewed include information of a proprietary or confidential nature, including technical information; financial data, such as salaries, and personal information concerning individuals associated with the proposals. These matters are exempt under 5 U.S.C. 552b(c), (4) and (6) of the Government in the Sunshine Act.

Dated: April 3, 2000.

Karen J. York,

Committee Management Officer.

[FR Doc. 00–8496 Filed 4–5–00; 8:45 am]

BILLING CODE 7555–01–M

NATIONAL SCIENCE FOUNDATION

Special Emphasis Panel in Undergraduate Education; Notice of Meeting

In accordance with the Federal Advisory Committee Act (Pub. L. 92–463, as amended), the National Science Foundation announces the following meeting.

Name: Special Emphasis Panel in Undergraduate Education (1214).

Date/Time: June 21, 22 & 23, 2000; 8 AM to 5 PM.

Place: Room 330, National Science Foundation, 4201 Wilson Blvd., Arlington, VA.

Type of Meeting: Closed.

Contact person: Drs. Elizabeth J. Teles and Gerhard L. Salinger, National Science Foundation, 4201 Wilson Boulevard, VA 22230. Telephone (703) 306–1667.

Purpose of Meeting: To provide advice and recommendations concerning proposals submitted to NSF for financial support.

Agenda: To review and evaluate ATE proposals as part of the selection process for awards.

Reason for Closing: The proposals being reviewed include information of a proprietary or confidential nature, including technical information; financial data, such as salaries, and personal information concerning individual associated with the proposals. These matters are exempt under 5 U.S.C. 552b(c), (4) and (6) of the Government in the Sunshine Act.

Dated: April 3, 2000.

Karen J. York.

Committee Management Officer.

[FR Doc. 00–8495 Filed 4–5–00; 8:45 am]

BILLING CODE 7555–01–M

NATIONAL SCIENCE FOUNDATION

Special Emphasis Panel in Undergraduate Education; Notice of Meeting

In accordance with the Federal Advisory Committee Act (Pub. L. 92–463, as amended), the National Science Foundation announces the following meeting.

Name: Special Emphasis Panel in Undergraduate Education (1214).

Date/Time: May 22–25, 2000; 8 AM to 5 PM.

Place: Rooms 365, 370, 375, 380 and 390 National Science Foundation, 4201 Wilson Boulevard, Arlington, VA.

Type of Meeting: Closed.

Contact Person: Drs. Lee L. Zia and C. Dianne Martin, National Science Foundation, 4201 Wilson Boulevard, Arlington, VA 22230. Telephone: (703) 306–1667/9.

Purpose of Meeting: To provide advice and recommendations concerning proposals submitted to NSF for financial support.

Agenda: To review and evaluate NSDL proposals as part of the selection process for awards.

Reason for Closing: The proposals being reviewed include information of a proprietary or confidential nature, including technical information; financial data, such as salaries; and personal information concerning individual associated with the proposals. These matters are exempt under 5 U.S.C. 552b(c), (4) and (6) of the Government in the Sunshine Act.

Dated: April 3, 2000.

Karen J. York,

Committee Management Officer.

[FR Doc. 00–8498 Filed 4–5–00; 8:45 am]

BILLING CODE 7555–01–M

NUCLEAR REGULATORY COMMISSION

[Docket No. 72–9]

Notice of Issuance of Amendment to Materials License SNM–2504 Department of Energy; Fort St. Vrain Independent Spent Fuel Storage Installation

The U.S. Nuclear Regulatory Commission (NRC or the Commission) has issued Amendment 8 to Materials License No. SNM–2504 held by the U.S. Department of Energy (DOE) for the receipt, possession, storage, and transfer of spent fuel at the Fort St. Vrain (FSV) independent spent fuel storage installation (ISFSI), located in Weld County, Colorado. The amendment is effective as of the date of issuance.

By application dated January 18, 2000, DOE requested an amendment to its ISFSI license to revise its radiological environmental monitoring program and to revise Technical Specification 5.5.2, ''Essential Program Control Program.''

This amendment complies with the standards and requirements of the Atomic Energy Act of 1954, as amended (the Act), and the Commission's rules and regulations. The Commission has made appropriate findings as required by the Act and the Commission's rules and regulations in 10 CFR Chapter I, which are set forth in the license amendment.

In accordance with 10 CFR 72.46(b)(2), a determination has been made that the amendment does not present a genuine issue as to whether public health and safety will be significantly affected. Therefore, the publication of a notice of proposed action and an opportunity for hearing or a notice of hearing is not warranted. Notice is hereby given of the right of interested persons to request a hearing on whether the action should be rescinded or modified.

The Commission has determined that, pursuant to 10 CFR 51.22(c)(11), an environmental assessment need not be prepared in connection with issuance of the amendment.

Documents related to this action are available for public inspection at the Commission's Public Document Room located at the Gelman Building, 2120 L Street, NW, Washington, DC 20555, and accessible electronically through the ADAMS Public Electronic Reading Room link at the NRC Web site (http://www.nrc.gov).

Dated at Rockville, Maryland, this 24th day of March 2000.

For the Nuclear Regulatory Commission

M. Wayne Hodges,

Acting Director, Spent Fuel Project Office, Office of Nuclear Material Safety and Safeguards.

[FR Doc. 00–8433 Filed 3–5–00; 8:45 am]

BILLING CODE 7590–01–P

NUCLEAR REGULATORY COMMISSION

[Docket Nos. 50–259, 50–260 and 50–296]

Tennessee Valley Authority; Notice of Consideration of Issuance of Amendment to Facility Operating License, Proposed No Significant Hazards Consideration Determination, and Opportunity for a Hearing

The U.S. Nuclear Regulatory Commission (the Commission) is considering issuance of an amendment to Facility Operating Licenses Nos. DPR–33, DPR–52 and DPR–68, issued to the Tennessee Valley Authority (the licensee), for operation of the Browns Ferry Nuclear Plant Units 1, 2, and 3 located in Limestone County, Alabama.

The proposed amendment would revise the Appendix A Technical Specifications to provide for maintenance on a secondary containment access door, when the other door in the flow path is closed, when one or more units are operating.

Exigent circumstances exist due to the need to repair an air leak on a pneumatic door seal on the inner main equipment access air lock. The licensee is concerned that the air leak could worsen if not repaired soon, potentially rendering the inner equipment access door inoperable. In this case, equipment transfer into and out of the secondary containment via the main equipment lock would be prohibited thereby hindering outage activities.

Before issuance of the proposed license amendment, the Commission will have made findings required by the Atomic Energy Act of 1954, as amended (the Act) and the Commission's regulations.

Pursuant to 10 CFR 50.91(a)(6) for amendments to be granted under exigent circumstances, the NRC staff must determine that the amendment request involves no significant hazards consideration. Under the Commission's regulations in 10 CFR 50.92, this means that operation of the facility in accordance with the proposed amendment would not (1) involve a significant increase in the probability or consequences of an accident previously evaluated; or (2) create the possibility of a new or different kind of accident from any accident previously evaluated; or (3) involve a significant reduction in a margin of safety. As required by 10 CFR 50.91(a), the licensee has provided its analysis of the issue of no significant hazards consideration, which is presented below:

TVA has concluded that operation of Browns Ferry Nuclear Plant (BFN) Units 1, 2, and 3 in accordance with the proposed change to the technical specifications does not involve a significant hazards consideration. TVA's conclusion is based on its evaluation, in accordance with 10 CFR 50.91(a)(1), of the three standards set forth in 10 CFR 50.92(c).

A. The proposed amendment does not involve a significant increase in the probability or consequences of an accident previously evaluated.

The proposed change is an administrative clarification of the existing requirements. Verifying that one door in each access opening is closed ensures the infiltration of outside air of such a magnitude as to prevent the maintaining of the desired post-accident negative pressure does not occur.

Therefore the proposed amendment does not involve a significant increase in the probability or consequences of an accident previously evaluated.

B. The proposed amendment does not create the possibility of a new or different kind of accident from any accident previously evaluated.

The proposed amendment does not add any new equipment or require any existing equipment to be operated in a manner different from the present design. The proposed change is consistent with the SAR [Safety Analysis Report] analysis for design basis accidents. No operation outside of the existing design basis is introduced by the proposed amendment.

Therefore, the proposed amendment does not create the possibility of a new or different kind of accident from any accident previously evaluated.

The proposed amendment does not involve a significant reduction in a margin of safety.

The proposed change is consistent with the BFN FSAR [Final Safety Analysis Report] accident analysis. The change does not physically modify any equipment, setpoints, or equipment initiation sequences.

For these reasons, the proposed amendment does not involve a significant reduction in the margin of safety.

The NRC staff has reviewed the licensee's analysis and, based on this review, it appears that the three standards of 10 CFR 50.92(c) are satisfied. Therefore, the NRC staff proposes to determine that the amendment request involves no significant hazards consideration.

The Commission is seeking public comments on this proposed determination. Any comments received within 14 days after the date of publication of this notice will be considered in making any final determination.

Normally, the Commission will not issue the amendment until the expiration of the 14-day notice period. However, should circumstances change during the notice period, such that failure to act in a timely way would result, for example, in derating or shutdown of the facility, the Commission may issue the license amendment before the expiration of the 14-day notice period, provided that its final determination is that the amendment involves no significant hazards consideration. The final determination will consider all public and State comments received. Should the Commission take this action, it will publish in the **Federal Register** a notice of issuance. The Commission expects that the need to take this action will occur very infrequently.

Written comments may be submitted by mail to the Chief, Rules and Directives Branch, Division of Administrative Services, Office of Administration, U.S. Nuclear Regulatory Commission, Washington, DC 20555–0001, and should cite the publication date and page number of this **Federal Register** notice. Written comments may also be delivered to Room 6D59, Two White Flint North, 11545 Rockville Pike, Rockville, Maryland, from 7:30 a.m. to 4:15 p.m. Federal workdays. Copies of written comments received may be examined at the NRC Public Document Room, the Gelman Building, 2120 L Street, NW., Washington, DC.

The filing of requests for hearing and petitions for leave to intervene is discussed below.

By April 20, 2000, the licensee may file a request for a hearing with respect to issuance of the amendment to the subject facility operating license and any person whose interest may be affected by this proceeding and who wishes to participate as a party in the proceeding must file a written request for a hearing and a petition for leave to intervene. Requests for a hearing and a petition for leave to intervene shall be filed in accordance with the Commission's ''Rules of Practice for Domestic Licensing Proceedings'' in 10 CFR Part 2. Interested persons should consult a current copy of 10 CFR 2.714 which is available at the Commission's Public Document Room, the Gelman Building, 2120 L Street, NW., Washington, DC, and accessible electronically through the ADAMS Public Electronic Reading Room link at the NRC Web site (http://www.nrc.gov). If a request for a hearing or petition for leave to intervene is filed by the above date, the Commission or an Atomic Safety and Licensing Board, designated by the Commission or by the Chairman of the Atomic Safety and Licensing Board Panel, will rule on the request and/or petition; and the Secretary or the designated Atomic Safety and Licensing Board will issue a notice of hearing or an appropriate order.

As required by 10 CFR 2.714, a petition for leave to intervene shall set forth with particularity the interest of the petitioner in the proceeding, and how that interest may be affected by the results of the proceeding. The petition should specifically explain the reasons why intervention should be permitted with particular reference to the following factors: (1) The nature of the petitioner's right under the Act to be made a party to the proceeding; (2) the nature and extent of the petitioner's property, financial, or other interest in the proceeding; and (3) the possible effect of any order which may be entered in the proceeding on the petitioner's interest. The petition should also identify the specific aspect(s) of the subject matter of the proceeding as to which petitioner wishes to intervene. Any person who has filed a petition for leave to intervene or who has been admitted as a party may amend the petition without requesting leave of the Board up to 15 days prior to the first prehearing conference scheduled in the proceeding, but such an amended petition must satisfy the specificity requirements described above.

Not later than 15 days prior to the first prehearing conference scheduled in the proceeding, a petitioner shall file a supplement to the petition to intervene which must include a list of the contentions which are sought to be litigated in the matter. Each contention must consist of a specific statement of the issue of law or fact to be raised or controverted. In addition, the petitioner shall provide a brief explanation of the bases of the contention and a concise statement of the alleged facts or expert opinion which support the contention and on which the petitioner intends to rely in proving the contention at the hearing. The petitioner must also provide references to those specific sources and documents of which the petitioner is aware and on which the petitioner intends to rely to establish those facts or expert opinion. Petitioner must provide sufficient information to show that a genuine dispute exists with the applicant on a material issue of law or fact. Contentions shall be limited to matters within the scope of the amendment under consideration. The contention must be one which, if proven, would entitle the petitioner to relief. A petitioner who fails to file such a supplement which satisfies these requirements with respect to at least one contention will not be permitted to participate as a party.

Those permitted to intervene become parties to the proceeding, subject to any limitations in the order granting leave to intervene, and have the opportunity to participate fully in the conduct of the hearing, including the opportunity to present evidence and cross-examine witnesses.

If the amendment is issued before the expiration of the 30-day hearing period, the Commission will make a final determination on the issue of no significant hazards consideration. If a hearing is requested, the final determination will serve to decide when the hearing is held.

If the final determination is that the amendment request involves no significant hazards consideration, the Commission may issue the amendment and make it immediately effective, notwithstanding the request for a hearing. Any hearing held would take place after issuance of the amendment.

If the final determination is that the amendment request involves a significant hazards consideration, any hearing held would take place before the issuance of any amendment.

A request for a hearing or a petition for leave to intervene must be filed with the Secretary of the Commission, U.S. Nuclear Regulatory Commission, Washington, DC 20555–0001, Attention: Rulemakings and Adjudications Staff, or may be delivered to the Commission's Public Document Room, the Gelman Building, 2120 L Street, NW., Washington, DC, by the above date. A copy of the petition should also be sent to the Office of the General Counsel, U.S. Nuclear Regulatory Commission, Washington, DC 20555–0001, and to General Counsel, Tennessee Valley

Authority, 400 West Summit Hill Drive, ET I0H, Knoxville, Tennessee 3790.

Nontimely filings of petitions for leave to intervene, amended petitions, supplemental petitions and/or requests for hearing will not be entertained absent a determination by the Commission, the presiding officer or the presiding Atomic Safety and Licensing Board that the petition and/or request should be granted based upon a balancing of the factors specified in 10 CFR 2.714(a)(1)(i)–(v) and 2.714(d).

For further details with respect to this action, see the application for amendment dated March 29, 2000, which is available for public inspection at the Commission's Public Document Room, the Gelman Building, 2120 L Street, NW., Washington, DC, and accessible electronically through the ADAMS Public Electronic Reading Room link at the NRC Web site (http://www.nrc.gov).

Dated at Rockville, Maryland, this 31st day of March 2000.

For the Nuclear Regulatory Commission.

William O. Long,

Project Manager, Section 2, Project Directorate II, Division of Licensing Project Management, Office of Nuclear Reactor Regulation.

[FR Doc. 00–8434 Filed 4–5–00; 8:45 am]

BILLING CODE 7590–01–P

OFFICE OF PERSONNEL MANAGEMENT

Proposed Collection; Comment Request for Review of a New Information Collection; OPM Form 1644

AGENCY: Office of Personnel Management.

ACTION: Notice.

SUMMARY: In accordance with the Paperwork Reduction Act of 1995 (Public Law 104–13, May 22, 1995), this notice announces that the Office of Personnel Management (OPM) intends to submit to the Office of Management and Budget a request for review of a new information collection. OPM Form 1644, Child Care Provider Information: Care Tuition Assistance Program for Federal Employees, is used to verify that child care providers are licensed and/or regulated by local and/or State authorities. Agencies need to know that child care providers to whom they make disbursements in the form of tuition assistance subsidies, are licensed and/or regulated by local and/or State authorities.

Pub. L. 106–58, passed by Congress on September 29, 1999, permits Federal agencies to use appropriated funds to help their lower income employees with their costs for child care. It is up to the agencies to decide on whether to implement this law. This is a new law and the extent to which it will be implemented, including the number of providers that will be involved, cannot be easily predicted. The form will take approximately 10 minutes to complete by each provider. The annual estimated burden is 83.5 hours.

Comments are particularly invited on:

—Whether the form adequately captures the information needed to verify child care provider State and/or local licensure and regulation.

—Whether our estimate of the public burden of this collection is accurate, and based on valid assumptions and methodology; and

—Ways in which we can minimize the burden of the collection of information on those who are to respond, through use of the appropriate technological collection techniques or other forms of information technology.

For copies of this proposal, contact Mary Beth Smith-Toomey on 202–606–8358, or e-mail to mbtoomey@opm.gov.

DATES: Comments on this proposal should be received on or before April 16, 2000.

ADDRESSES: Send or deliver comments to:

Anice V. Nelson, Director, Family-Friendly Workplace Advocacy Office, U.S. Office of Personnel Management, 1900 E St. NW, Washington, DC 20415.

And

Joseph Lackey, Agency Desk Officer, Office of Management and Budget, 725 17th St. NW Room 10235, Washington, DC 20503.

FOR INFORMATION REGARDING ADMINISTRATION COORDINATION CONTACT: PAT KINNEY, WORK/LIFE TEAM LEADER, FAMILY-FRIENDLY WORKPLACE ADVOCACY OFFICE, (202) 606–1313.

U.S. Office of Personnel Management.

Janice R. Lachance,

Director.

[FR Doc. 00–8399 Filed 4–5–00; 8:45 am]

BILLING CODE 6325–01–P

SOCIAL SECURITY ADMINISTRATION

Rescission of Social Security Acquiescence Ruling 88–1(11)

AGENCY: Social Security Administration.

ACTION: Notice of rescission of Social Security Acquiescence Ruling 88–1(11)—*Patterson* v. *Bowen,* 799 F.2d 1455 (11th Cir. 1986), reh'g denied, (February 12, 1987).

SUMMARY: In accordance with 20 CFR 402.35(b)(2), 404.985(e) and 416.1485(e) the Commissioner of Social Security gives notice of the rescission of Social Security Acquiescence Ruling 88–1(11).

EFFECTIVE DATE: The rescission of the Acquiescence Ruling will be effective May 8, 2000.

FOR FURTHER INFORMATION CONTACT: Gary Sargent, Litigation Staff, Social Security Administration, 6401 Security Boulevard, Baltimore, MD 21235, (410) 965–1695.

SUPPLEMENTARY INFORMATION: A Social Security Acquiescence Ruling explains how we will apply a holding in a decision of a United States Court of Appeals that we determine conflicts with our interpretation of a provision of the Social Security Act or regulations when the Government has decided not to seek further review of the case or is unsuccessful on further review.

As provided by 20 CFR 404.985(e)(4) and 416.1485(e)(4), a Social Security Acquiescence Ruling may be rescinded as obsolete if we subsequently clarify, modify or revoke the regulation or ruling that was the subject of the circuit court holding for which the Acquiescence Ruling was issued.

On January 29, 1988, we issued Acquiescence Ruling 88–1(11) to reflect the holding in *Patterson* v. *Bowen,* 799 F.2d 1455 (11th Cir. 1986), reh'g denied, (February 12, 1987), regarding the consideration of a claimant's age as a vocational factor at the last step of the sequential evaluation process for determining disability. Acquiescence Ruling 88–1(11), Social Security Rulings (Cumulative Edition 1988, p. 123). The Eleventh Circuit interpreted 20 CFR 404.1563 and 416.963 to permit a claimant to offer evidence of his or her physical or mental impairments as proof that his or her ability to adapt to other work in terms of age alone is less than the level established under the medical-vocational guidelines for claimants of that age. The court held that such evidence, which the Social Security Administration (SSA) [1] already considers in assessing a claimant's residual functional capacity, is relevant

[1] Under the Social Security Independence and Program Improvements Act of 1994, Pub. L. No. 103–296, effective March 31, 1995, SSA became an independent Agency in the Executive Branch of the United States Government and was provided ultimate responsibility for administering the Social Security and Supplemental Security Income programs under titles II and XVI of the Act. Prior to March 31, 1995, the Secretary of Health and Human Services had such responsibility.

to the question of a claimant's ability to adapt to a new work environment, and that SSA must reevaluate such evidence when considering the effect of age on a claimant's ability to adapt to a new work environment.

We indicated in the Acquiescence Ruling that we intended to clarify the regulations at issue in this case through the rulemaking process and that the Ruling would continue to apply until such clarification was made. On August 4, 1999, we published proposed rules with a notice of proposed rulemaking in the **Federal Register** (64 FR 42310) to clarify our regulations on the consideration of age as a vocational factor. We are now publishing final rules in this issue of the **Federal Register**.

We are publishing this notice of rescission of Acquiescence Ruling 88–1(11) concurrently with our publication of final rules which revise 20 CFR 404.1563 and 416.963. The final rules remove the provision contained in existing sections 404.1563(a) and 416.963(a) that states, in part, that ''Age refers to how old you are * * * and the extent to which your age affects your ability to adapt to a new work situation and to do work in competition with others.'' The final rules revise sections 404.1563(a) and 416.963(a) to state explicitly that ''age'' means a claimant's ''chronological age.'' In addition, sections 404.1563(a) and 416.963(a) of the final rules explain that when we determine whether an individual is disabled at the last step of the sequential evaluation, we consider the individual's chronological age in combination with his or her residual functional capacity, education, and work experience to determine whether the individual is able to adjust to other work. The final rules will go into effect May 8, 2000.

Because the final rules clarify the regulations at issue in Patterson and explain that ''age'' means a claimant's ''chronological age,'' we are rescinding Acquiescence Ruling 88–1(11) effective May 8, 2000, the date the final rules go into effect. By revising our regulations and rescinding the Acquiescence Ruling, we are restoring uniformity to our nationwide system of rules in accordance with our commitment to the goal of administering our programs through uniform national standards as discussed in the preamble to the 1998 acquiescence regulations, 63 FR 24927 (May 6, 1998).

(Catalog of Federal Domestic Assistance Program Nos. 96.001 Social Security—Disability Insurance; 96.002 Social Security—Retirement Insurance; 96.004 Social Security—Survivors Insurance; 96.005 Special Benefits for Disabled Coal Miners; 96.006 Supplemental Security Income.)

Dated: March 17, 2000.

Kenneth S. Apfel,

Commissioner of Social Security.

[FR Doc. 00–8358 Filed 4–5–00; 8:45 am]

BILLING CODE 4191–02–U

SOCIAL SECURITY ADMINISTRATION

Rescission of Social Security Acquiescence Rulings 95–1(6), 99–2(8) and 99–3(5)

AGENCY: Social Security Administration.

ACTION: Notice of rescission of Social Security Acquiescence Rulings 95–1(6)—*Preslar* v. *Secretary of Health and Human Services,* 14 F.3d 1107 (6th Cir. 1994); 99–2(8)—*Kerns* v. *Apfel,* 160 F.3d 464 (8th Cir. 1998); 99–3(5)—*McQueen* v. *Apfel,* 168 F.3d 152 (5th Cir. 1999).

SUMMARY: In accordance with 20 CFR 402.35(b)(2), 404.985(e) and 416.1485(e) the Commissioner of Social Security gives notice of the rescission of Social Security Acquiescence Rulings 95–1(6), 99–2(8) and 99–3(5).

EFFECTIVE DATE: The rescission of these Acquiescence Rulings will be effective May 8, 2000.

FOR FURTHER INFORMATION CONTACT: Gary Sargent, Litigation Staff, Social Security Administration, 6401 Security Boulevard, Baltimore, MD 21235, (410) 965–1695.

SUPPLEMENTARY INFORMATION: A Social Security Acquiescence Ruling explains how we will apply a holding in a decision of a United States Court of Appeals that we determine conflicts with our interpretation of a provision of the Social Security Act or regulations when the Government has decided not to seek further review of the case or is unsuccessful on further review.

As provided by 20 CFR 404.985(e)(4) and 416.1485(e)(4), a Social Security Acquiescence Ruling may be rescinded as obsolete if we subsequently clarify, modify or revoke the regulation or ruling that was the subject of the circuit court holding for which the Acquiescence Ruling was issued.

On May 4, 1995, we issued Acquiescence Ruling 95–1(6) (60 FR 22091) to reflect the holding in *Preslar* v. *Secretary of Health and Human Services,* 14 F.3d 1107 (6th Cir. 1994). On March 11, 1999, we issued Acquiescence Ruling 99–2(8) (64 FR 12205) to reflect the holding in *Kerns* v. *Apfel*, 160 F.3d 464 (8th Cir. 1998). On May 27, 1999, we issued Acquiescence Ruling 99–3(5) (64 FR 28853) to reflect the holding in *McQueen* v. *Apfel,* 168 F.3d 152 (5th Cir. 1999). These circuit court holdings interpreted 20 CFR 404.1563(d) to require the Social Security Administration (SSA) [1] to make an additional finding regarding the marketability of a claimant's skills in order to determine whether the skills of a claimant close to retirement age (age 60–64) are transferable to sedentary or light work. These courts held that in the absence of a finding by SSA that the skills of such an individual are ''highly marketable,'' SSA may not conclude that the claimant possesses transferable skills and is not disabled.

We indicated in each of the Acquiescence Rulings that we intended to clarify the regulations at issue in the court decisions, 20 CFR 404.1563 and 416.963, through the rulemaking process, and that we may rescind the Acquiescence Rulings once we revise the regulations. On August 4, 1999, we published proposed rules with a notice of proposed rulemaking in the **Federal Register** (64 FR 42310) to clarify the regulations that were the subject of the circuit court holdings. We are now publishing final rules in this issue of the **Federal Register**.

We are publishing this notice of rescission of the Acquiescence Rulings concurrently with our publication of final rules which revise 20 CFR 404.1563 and 416.963. The final rules remove the reference to ''highly marketable'' skills contained in existing sections 404.1563(d) and 416.963(d). The final rules also add new sections 404.1568(d)(4) and 416.968(d)(4) to clarify our original intent to apply the standard in sections 201.00(f) and 202.00(f) of the medical-vocational guidelines (20 CFR part 404, subpart P, appendix 2) to determine whether an individual who is age 60–64 and limited to sedentary or light work possesses transferable skills and, therefore, is able to make an adjustment to other work. The final rules will go into effect May 8, 2000.

Because the final rules eliminate the regulatory provision upon which the holdings in *Preslar, Kerns* and *McQueen* are based and clarify how we evaluate the transferability of skills for older workers, including those close to retirement age (age 60–64), we are rescinding Acquiescence Rulings 95–1(6), 99–2(8) and 99–3(5). We are

[1] Under the Social Security Independence and Program Improvements Act of 1994, Pub. L. No. 103–296, effective March 31, 1995, SSA became an independent Agency in the Executive Branch of the United States Government and was provided ultimate responsibility for administering the Social Security and Supplemental Security Income programs under titles II and XVI of the Act. Prior to March 31, 1995, the Secretary of Health and Human Services had such responsibility.

rescinding these Acquiescence Rulings effective May 8, 2000, the date the final rules go into effect. By revising our regulations and rescinding these Acquiescence Rulings, we are restoring uniformity to our nationwide system of rules in accordance with our commitment to the goal of administering our programs through uniform national standards as discussed in the preamble to the 1998 acquiescence regulations, 63 FR 24927 (May 6, 1998).

(Catalog of Federal Domestic Assistance Program Nos. 96.001 Social Security—Disability Insurance; 96.002 Social Security—Retirement Insurance; 96.004 Social Security—Survivors Insurance; 96.005 Special Benefits for Disabled Coal Miners; 96.006 Supplemental Security Income.)

Dated: March 17, 2000.

Kenneth S. Apfel,

Commissioner of Social Security.

[FR Doc. 00–8357 Filed 4–5–00; 8:45 am]

BILLING CODE 4191–02–U

DEPARTMENT OF STATE

[Public Notice 3274]

Culturally Significant Objects Imported for Exhibition Determinations: ''1900: Art at the Crossroads''

AGENCY: U.S. Department of State.

ACTION: Notice.

SUMMARY: Notice is hereby given of the following determinations:

Pursuant to the authority vested in me by the Act of October 19, 1965 [79 Stat. 985, 22 U.S.C. 2459], the Foreign Affairs Reform and Restructuring Act of 1998 [112 Stat. 2681 *et seq.*], Delegation of Authority No. 234 of October 1, 1999 [64 FR 56014], and Delegation of Authority No. 236 of October 19, 1999, as amended by Delegation of Authority No. 236–1 of November 9, 1999, I hereby determine that the objects to be included in the exhibit, ''1900: Art at the Crossroads,'' imported from abroad for the temporary exhibition without profit within the United States, are of cultural significance. These objects are imported pursuant to loan agreements with foreign lenders. I also determine that the temporary exhibition or display of the exhibit objects at the Guggenheim Museum, New York, NY, from on or about May 18, 2000, to on or about September 10, 2000, is in the national interest. Public Notice of these determinations is ordered to be published in the **Federal Register**.

FOR FURTHER INFORMATION CONTACT: For further information, including a list of exhibit objects, contact Paul W. Manning, Attorney-Adviser, Office of the Legal Adviser, 202/619–5997, and the address is Room 700, United States Department of State, 301 4th Street, SW, Washington, DC 20547–0001.

Dated: March 31, 2000.

William B. Bader,

Assistant Secretary for Educational and Cultural Affairs, United States Department of State.

[FR Doc. 00–8511 Filed 4–5–00; 8:45 am]

BILLING CODE 4710–08–P

DEPARTMENT OF TRANSPORTATION

Federal Highway Administration

Environmental Impact Statement; Douglas and Franklin Counties, KS

AGENCY: Federal Highway Administration (FHWA), DOT.

ACTION: Notice of intent.

SUMMARY: The FHWA is issuing this notice to advise the public that an environmental impact statement will be prepared for a proposed highway project on U.S. Highway 59 in Douglas and Franklin Counties, Kansas.

FOR FURTHER INFORMATION CONTACT: Kurt C. Dunn, P.E., Engineering Services Team Leader, Federal Highway Administration, 3300 South Topeka Boulevard, Suite 1, Topeka, Kansas 66611–2237, Telephone: (785) 267–7281; Warren L. Sick, Assistant Secretary and State Transportation Engineer, Kansas Department of Transportation, 915 Harrison, Topeka, Kansas 66612, Telephone (785) 296–3285.

SUPPLEMENTARY INFORMATION:

Electronic Access

An electronic copy of this document may be downloaded using a modem and suitable communications software from the Government Printing Office's Electronic Bulletin Board Service at (202) 512–1661. Internet users may reach the Federal Register home page at: *http://www.nara.gov/fedreg* and the Government Printing Office's database at: *http://www.access.gpo.gov/nara.*

Background

The FHWA, in cooperation with the Kansas Department of Transportation (KDOT), will prepare an environmental impact statement (EIS) on a proposal to improve U.S. Highway 59 in Douglas and Franklin Counties, Kansas. The proposed project would involve the improvement of the existing U.S. 59 corridor between the cities of Lawrence and Ottawa, a distance of about 27.2 kilometers (17 miles) in length. The KDOT has held three public information meetings on proposed improvements to U.S. 59. An environmental assessment was prepared for a proposed limited access facility on new alignment. The high level of public concern expressed and the potential for significant impacts has led to the decision to prepare an EIS.

Improvements to the corridor are considered necessary to provide for the existing and projected traffic demands and to improve safety. Also, under consideration in this proposal is a new connection with the existing Interstate Highway 35 near Ottawa. Alternatives under consideration include (1) taking no action; (2) improving the existing alignment; and (3) construction on a new alignment.

Comments are being solicited from appropriate Federal, State, and local agencies, and from private organizations and citizens who have interest in this proposal. A public hearing will be held once the draft EIS is completed. Public notice will be given of the time and place of the hearing. The draft EIS will be available for public and agency review and comment prior to the public hearing. The FHWA has determined that a formal scoping meeting is not necessary.

Comments and/or suggestions from all interested parties are requested to ensure that the full page of issues related to this proposed action, and significant environmental issues in particular, are identified and reviewed. Comments or questions concerning this proposed action and the EIS should be directed to the FHWA or the KDOT at the address provided above.

Authority: 23 U.S.C. 315; 49 CFR 1.48.

Issued on March 16, 2000.

David R. Geiger,

Division Administrator, Kansas Division, Federal Highway Administration, Topeka, Kansas.

[FR Doc. 00–8427 Filed 4–5–00; 8:45 am]

BILLING CODE 4910–22–M

DEPARTMENT OF TRANSPORTATION

Maritime Administration

[Docket Number: MARAD–2000–7166]

Requested Administrative Waiver of the Coastwise Trade Laws

AGENCY: Maritime Administration, Department of Transportation.

ACTION: Invitation for public comments on a requested administrative waiver of the Coastwise Trade Laws for the vessel HAGGAI.

SUMMARY: As authorized by Public Law 105–383, the Secretary of Transportation, as represented by the Maritime Administration (MARAD), is authorized to grant waivers of the U.S. build requirement of the coastwise laws under certain circumstances. A request for such a waiver has been received by MARAD. The vessel, and a description of the proposed service, is listed below. Interested parties may comment on the effect this action may have on U.S. vessel builders or businesses in the U.S. that use U.S.-flag vessels. If MARAD determines that in accordance with Pub. L. 105–383 and MARAD's regulations at 46 CFR 388 (65 FR 6905; February 11, 2000) that the issuance of the waiver will have an unduly adverse effect on a U.S.-vessel builder or a business that uses U.S.-flag vessels, a waiver will not be granted.

DATES: Submit comments on or before May 8, 2000.

ADDRESSES: Comments should refer to docket number MARAD–2000–7166. Written comments may be submitted by hand or by mail to the Docket Clerk, U.S. DOT Dockets, Room PL–401, Department of Transportation, 400 7th St., SW, Washington, DC 20590–0001. You may also send comments electronically via the Internet at http://dmses.dot.gov/submit/. All comments will become part of this docket and will be available for inspection and copying at the above address between 10 a.m. and 5 p.m., E.T., Monday through Friday, except federal holidays. An electronic version of this document and all documents entered into this docket is available on the World Wide Web at http://dms.dot.gov.

FOR FURTHER INFORMATION CONTACT: Michael Hokana, U.S. Department of Transportation, Maritime Administration, MAR 832 Room 7201, 400 Seventh Street, SW, Washington, DC 20590. Telephone 202–366–0760.

SUPPLEMENTARY INFORMATION: Title V of Pub. L. 105–383 provides authority to the Secretary of Transportation to administratively waive the U.S.-build requirements of the Jones Act, and other statutes, for small commercial passenger vessels (less than 12 passengers). This authority has been delegated to the Maritime Administration per 49 CFR 1.66, Delegations to the Maritime Administrator, as amended. By this notice, MARAD is publishing information on a vessel for which a request for a U.S.-build waiver has been received, and for which MARAD requests comments from interested parties. Comments should refer to the docket number of this notice and the vessel name in order for MARAD to properly consider the comments. Comments should also state the commentor's interest in the waiver application, and address the waiver criteria given in § 388.4 of MARAD'S regulations at 46 CFR part 388.

Vessel Proposed for Waiver of the U.S.-Build Requirement

(1) Name of vessel and owner for which waiver is requested:

Name of vessel: HAGGAI Owner: Jeffrey White

(2) Size, capacity and tonnage of vessel: According to the Applicant ''HAGGAI is 33.5 feet long with a breadth of 11.7 feet and a depth of 6.2 feet. Her gross tonnage is 13 tons. Tonnage was measured pursuant to 46 U.S.C. 14502 specifications.''

(3) Intended use for vessel, including geographic region of intended operation and trade. According to the applicant: ''I intend to use this vessel to conduct evening, 1-day, or weekend charters which will simply involve sunset viewing, exploring local harbors and islands, and occasionally trolling a fishing line. It is not my intention to conduct a fishing charter business. The region in which I would like to operate is the coastal waters of Massachusetts, specifically between Gloucester and Boston.''

(4) Date and place of construction and (if applicable) rebuilding. Date of construction: 1979, place of construction: Taiwan, Republic of China.

(5) A statement on the impact this waiver will have on other commercial passenger vessel operators. According to the applicant: ''Considering the type of activities I intend to conduct, and the area in which I intend to conduct them, I am confident that if this waiver is granted it will have no adverse effects upon commercial passenger vessel operators. The vessels operating in my area are: large whale watch vessels, commercial fishing vessels, large fishing charter vessels, and sport-fishing charter vessels.''

(6) A statement on the impact this waiver will have on U.S. shipyards. According to the applicant: ''The granting of this waiver will not affect the business of U.S. shipbuilders adversely. Ultimately, not granting this waiver will however, because it is my intention to start my operation using HAGGAI and use the profits to help fund the eventual purchase of a U.S. built sailing vessel to conduct my business. Considering the activities I plan to pursue, a U.S. built sailing vessel would best suit my needs, however, my current financial situation is impeding my goal. I see the use of HAGGAI to begin this endeavor as my only viable option. As stated, the granting of this waiver will have only a positive affect on U.S. shipbuilders. To my knowledge, there is no business operating in my area which will be affected by the granting of this waiver.''

Dated: March 31, 2000.

By Order of the Maritime Administrator.

Joel C. Richard,

Secretary, Maritime Administration.

[FR Doc. 00–8423 Filed 4–5–00; 8:45 am]

BILLING CODE 4910–81–P

DEPARTMENT OF THE TREASURY

Submission for OMB Review; Comment Request

March 28, 2000.

The Department of Treasury has submitted the following public information collection requirement(s) to OMB for review and clearance under the Paperwork Reduction Act of 1995, Public Law 104–13. Copies of the submission(s) may be obtained by calling the Treasury Bureau Clearance Officer listed. Comments regarding this information collection should be addressed to the OMB reviewer listed and to the Treasury Department Clearance Officer, Department of the Treasury, Room 2110, 1425 New York Avenue, NW., Washington, DC 20220.

DATES: Written comments should be received on or before May 8, 2000 to be assured of consideration.

Internal Revenue Service (IRS)

OMB Number: 1545–1671.

Regulation Project Number: REG–209709–94 Final.

Type of Review: Extension.

Title: Amortization of Intangible Property.

Description: The information is required by the IRS to aid it in administering the law and to implement the election provided by section 197(f)(9)(B) of the Internal Revenue Code. The information will be used to verify that a taxpayer is properly reporting its amortization and income taxes.

Estimated Number of Respondents: 500.

Estimated Burden Hours Per Respondent: 3 hours.

Frequency of Response: Annually.

Estimated Total Reporting Burden: 1,500 hours.

Clearance Officer: Garrick Shear, Internal Revenue Service, Room 5244, 1111 Constitution Avenue, NW, Washington, DC 20224.

OMB Reviewer: Alexander T. Hunt (202) 395–7860, Office of Management

and Budget, Room 10202, New Executive Office Building, Washington, DC 20503.

Lois K. Holland,

Departmental Reports Management Officer.

[FR Doc. 00–8417 Filed 4–5–00; 8:45 am]

BILLING CODE 4830–01–P

DEPARTMENT OF THE TREASURY

Submission for OMB Review; Comment Request

March 28, 2000.

The Department of Treasury has submitted the following public information collection requirement(s) to OMB for review and clearance under the Paperwork Reduction Act of 1995, Public Law 104–13. Copies of the submission(s) may be obtained by calling the Treasury Bureau Clearance Officer listed. Comments regarding this information collection should be addressed to the OMB reviewer listed and to the Treasury Department Clearance Officer, Department of the Treasury, Room 2110, 1425 New York Avenue, NW., Washington, DC 20220.

DATES: Written comments should be received on or before May 8, 2000 to be assured of consideration.

Internal Revenue Service (IRS)

OMB Number: 1545–0714.

Form Number: IRS Forms 8027 and 8027–T.

Type of Review: Extension.

Title: Employer's Annual Information Return of Tip Income and Allocated Tips (Form 8027); and Transmittal of Employer's Annual Information Return of Tip Income and Allocated Tips (Form 8027–T).

Description: To help IRS in its examination of return filed by tipped employees, large food or beverage establishments are required to report annually information concerning food or beverage operations receipts, tips reported by employees, and in certain cases, the employer must allocate tips to certain employees.

Respondents: Business or other for-profit, Individuals or households, Not-for-profit institutions, State, Local or Tribal Government

Estimated Number of Respondents/Recordkeepers: 52,050.

Estimated Burden Hours Per Respondent/Recordkeeper:

Form	Recordkeeping	Learning about the law or the form	Preparing, and sending the form to the IRS
8027	5 hr., 59 min	53 min	1 hr., 2 min.
8027–T	43 min	0 min	1 min.

Frequency of Response: Annually.

Estimated Total Reporting/Recordkeeping Burden: 392,986 hours.

OMB Number: 1545–1666.

Regulation Project Number: REG–116048–99 NPRM and Temporary.

Type of Review: Extension.

Title: Stock Transfer Rules, Supplemental Rules.

Description: These regulations provide rules governing income recognition upon the occurrence of a section 367(b) transaction. Specifically, they provide certain elections for a taxpayer to limit its income inclusion.

Respondents: Business or other for-profit, Farms.

Estimated Number of Respondents: 20.

Estimated Burden Hours Per Respondent: 4 hours, 15 minutes.

Frequency of Response: Annually.

Estimated Total Reporting Burden: 85 hours.

Clearance Officer: Garrick Shear, Internal Revenue Service, Room 5244, 1111 Constitution Avenue, NW., Washington, DC 20224.

OMB Reviewer: Alexander T. Hunt (202) 395–7860, Office of Management and Budget, Room 10202, New Executive Office Building, Washington, DC 20503.

Lois K. Holland,

Departmental Reports, Management Officer.

[FR Doc. 00–8418 Filed 4–5–00; 8:45 am]

BILLING CODE 4830–01–P

DEPARTMENT OF THE TREASURY

Submission for OMB Review; Comment Request

March 30, 2000.

The Department of Treasury has submitted the following public information collection requirement(s) to OMB for review and clearance under the Paperwork Reduction Act of 1995, Public Law 104–13. Copies of the submission(s) may be obtained by calling the Treasury Bureau Clearance Officer listed. Comments regarding this information collection should be addressed to the OMB reviewer listed and to the Treasury Department Clearance Officer, Department of the Treasury, Room 2110, 1425 New York Avenue, NW., Washington, DC 20220.

DATES: Written comments should be received on or before May 8, 2000 to be assured of consideration.

Internal Revenue Service (IRS)

OMB Number: 1545–0166.

Form Number: IRS Form 4255.

Type of Review: Extension.

Title: Recapture of Investment Credit.

Description: Internal Revenue Code (IRC) section 50(a) and Regulation section 1.47 require that taxpayers attach a statement to their return showing the computation of the recapture tax when investment credit property is disposed of before the end of the recapture period used in the original computation of the investment credit.

Estimated Number of Respondents/Recordkeepers: 20,000.

Estimated Burden Hours Per Respondent/Recordkeeper:

Recordkeeping—6 hr., 28 min.
Learning about the law or the form—1 hr., 35 min.
Preparing, copying, assembling, and sending the form to the IRS—1 hr., 46 min.

Frequency of Response: On occasion.

Estimated Total Reporting/Recordkeeping Burden: 196,400 hours.

OMB Number: 1545–0233.

Form Number: IRS Form 7004.

Type of Review: Extension.

Title: Application for Automatic Extension of Time to File Corporation Income Tax Return.

Description: Form 7004 is used by corporations and certain non-profit institutions to request an automatic 6-month extension of time to file their income tax returns. The information is needed by IRS to determine whether Form 7004 was timely filed so as not to impose a late filing penalty in error and also to insure that a proper amount of tax was computed and deposited.

Estimated Number of Respondents/Recordkeepers: 1,097,748.

Estimated Burden Hours Per Respondent/Recordkeeper:

Recordkeeping—5 hr., 44 min.
Learning about the law or the form—1 hr., 22 min.
Preparing the form—2 hr., 27 min.
Copying, assembling, and sending the form to the IRS—16 min.

Frequency of Response: Annually.

Estimated Total Reporting/ Recordkeeping Burden: 10,790,863 hours.

OMB Number: 1545–0387.

Form Number: IRS Form 4419.

Type of Review: Extension.

Title: Application for Filing Information Returns Magnetically/ Electronically.

Description: Under section 601(e)(2)(a) of the Internal Revenue Code, any person, including corporations, partnerships, individuals, estates and trusts, who is required to file 250 or more information returns magnetically/electronically. Payers required to file on magnetic media or electronically must complete Form 4419 to receive authorization to file.

Estimated Number of Respondents: 15,000.

Estimated Burden Hours Per Respondent: 26 minutes.

Frequency of Response: On occasion.

Estimated Total Reporting Burden: 6,500 hours.

OMB Number: 1545–1412.

Regulation Project Number: FI–54–93 Final.

Type of Review: Extension.

Title: Clear Reflection of Income in the Case of Hedging Transactions.

Description: This information is required by the Internal Revenue Service to verify with section 446 of the Internal Revenue Code. This information will be used to determine that the amount of tax has been computed correctly.

Estimated Number of Recordkeepers: 110,000.

Estimated Burden Hours Per Recordkeeper: 12 minutes.

Estimated Total Recordkeeping Burden: 22,000 hours.

OMB Number: 1545–1434.

Regulation Project Number: CO–26–96 Final.

Type of Review: Extension.

Title: Regulations Under Section 382 of the Internal Revenue Code of 1986; Application of Section 382 in Short Taxable Years and With Respect to Controlled Groups.

Description: Section 382 limits the amount of income that can be offset by loss carryovers after an ownership change. These regulations provide rules for applying section 382 in the case of short taxable years and with respect to controlled groups.

Estimated Number of Respondents: 3,500.

Estimated Burden Hours Per Respondent: 15 minutes.

Frequency of Response: Annually.

Estimated Total Reporting Burden: 875 hours.

OMB Number: 1545–1520.

Revenue Procedure Number: Revenue Procedures 2000–4, 2000–5, 2000–6, 2000–8 (Formerly Revenue Procedures 99–4, 99–5, 99–6, and 99–8).

Type of Review: Extension.

Title: Letter Rulings (2000–4); Technical Advice (2000–5); Determination Letters (2000–6); User Fees (2000–8).

Description: The information requested in Revenue Procedure 2000–4, Revenue Procedure 2000–5, Revenue Procedure 2000–6 and Revenue Procedure 2000–8 is required to enable the Office of the Assistant Commissioner (Employee Plans and Exempt Organizations) of the Internal Revenue Service to give advice on filing letter ruling, determination letter, and technical advice requests, to process such requests, and to determine the amount of any user fees.

Estimated Number of Respondents: 83,068.

Estimated Burden Hours Per Respondent: 2 hours, 8 minutes.

Frequency of Response: On occasion.

Estimated Total Reporting Burden: 177,986 hours.

OMB Number: 1545–1522.

Regulation Project Number: Revenue Procedures 2000–1 and 2000–3.

Type of Review: Extension.

Title: 26 CFR 601.201—Rulings and Determination Letters.

Description: The information requested in Revenue Procedure 2000–1 under sections 5.05, 6.07, 8.01, 8.02, 8.03, 8.04, 8.05, 8.07, 9.01, 10.06, 10.07, 10.09, 11.01, 11.06, 11.07, 12.11, 13.02, 15.02, 15.07, 15.08, 15.09, and 15.11, paragraph (B)(1) of Appendix A, and Appendix C, and question 35 of Appendix C, and in Revenue Procedure 2000–3 under sections 3.01(22), (24), (25), (27), and (28), 3.02(1) and (3), 4.01(26), and 4.02(1) and (7)(b) is required to enable the Internal Revenue Service to give advice on filing letter ruling and determination letter requests and to process such requests.

Estimated Number of Respondents: 3,800.

Estimated Burden Hours Per Respondent: 80 hours, 19 minutes.

Frequency of Response: On occasion.

Estimated Total Reporting Burden: 305,230 hours.

Clearance Officer: Garrick Shear, Internal Revenue Service, Room 5244, 1111 Constitution Avenue, NW, Washington, DC 20224.

OMB Reviewer: Alexander T. Hunt (202) 395–7860, Office of Management and Budget, Room 10202, New Executive Office Building, Washington, DC 20503.

Lois K. Holland,

Departmental Reports, Management Officer.

[FR Doc. 00–8419 Filed 4–5–00; 8:45 am]

BILLING CODE 4830–01–P

DEPARTMENT OF THE TREASURY

Office of the Comptroller of the Currency

Proposed Renewal of Information Collection; Comment Request

AGENCY: Office of the Comptroller of the Currency (OCC), Treasury.

ACTION: Notice and request for comment.

SUMMARY: The OCC, as part of its continuing effort to reduce paperwork and respondent burden, invites the general public and other Federal agencies to take this opportunity to comment on a continuing information collection, as required by the Paperwork Reduction Act of 1995. Currently, the OCC is soliciting comment concerning its extension, without change, of an information collection titled, ''Investment Securities—12 CFR 1.''

DATES: You should submit written comments by June 5, 2000.

ADDRESSES: You should direct all written comments to the Communications Division, Attention: 1557–0205, Third Floor, Office of the Comptroller of the Currency, 250 E Street, SW, Washington, DC 20219. In addition, you may send comments by facsimile transmission to (202) 874–5274, or by electronic mail to regs.comments@occ.treas.gov.

FOR FURTHER INFORMATION CONTACT: You can request additional information or a copy of the collection from Jessie Dunaway or Camille Dixon, (202) 874–5090, Legislative and Regulatory Activities Division (1557–0205), Office of the Comptroller of the Currency, 250 E Street, SW, Washington, DC 20219. You can inspect and photocopy the comments at the OCC's Public Reference Room, 250 E Street, SW, Washington, DC, between 9:00 a.m. and 5:00 p.m. on business days. You can make an appointment to inspect the comments by calling (202)874–5043.

SUPPLEMENTARY INFORMATION: The OCC is proposing to extend OMB approval of the following information collection:

Title: Investment Securities—12 CFR 1.

OMB Number: 1557–0205.

Form Number: None.

Abstract: This submission covers an existing regulation and involves no

change to the regulation or to the information collections embodied in the regulation. The OCC requests only that OMB renew its approval of the information collections in the current regulation.

The information requirements in 12 CFR part 1 are located as follows:

Under 12 CFR 1.3(h)(2), a national bank may request an OCC determination that it may invest in an entity that is exempt from registration under section 3(c)(1) of the Investment Company Act of 1940 if the portfolio of the entity consists exclusively of assets that a national bank may purchase and sell for its own account. The OCC uses the information contained in the request as a basis for determining that the bank's investment is consistent with its investment authority under applicable law and does not pose unacceptable risk.

Under 12 CFR 1.7(b), a national bank may request OCC approval to extend the five-year holding period of securities held in satisfaction of debts previously contracted (DPC) for up to an additional five years. The bank must provide a clearly convincing demonstration of why any additional holding period is needed. The OCC uses the information in the request to ensure, on a case-by-case basis, that the bank's purpose in retaining the securities is not speculative and that the bank's reasons for requesting the extension are adequate, and to evaluate the risks to the bank of extending the holding period, including potential effects on bank safety and soundness.

Type of Review: Extension, without change, of a currently approved collection.

Affected Public: Businesses or other for-profit; individuals.

Estimated Number of Respondents: 25.

Estimated Total Annual Responses: 25.

Frequency of Response: On occasion.

Estimated Total Annual Burden: 460 burden hours.

Comments

Comments submitted in response to this notice will be summarized and included in the request for OMB approval. All comments will become a matter of public record. Comments are invited on:

(a) Whether the collection of information is necessary for the proper performance of the functions of the agency, including whether the information has practical utility;

(b) The accuracy of the agency's estimate of the burden of the collection of information;

(c) Ways to enhance the quality, utility, and clarity of the information to be collected;

(d) Ways to minimize the burden of the collection on respondents, including through the use of automated collection techniques or other forms of information technology; and

(e) Estimates of capital or startup costs and costs of operation, maintenance, and purchase of services to provide information.

Dated: March 31, 2000.

Mark J. Tenhundfeld,

Assistant Director, Legislative & Regulatory Activities Division.

[FR Doc. 00–8503 Filed 4–5–00; 8:45 am]

BILLING CODE 4810–33–P

DEPARTMENT OF THE TREASURY

Internal Revenue Service

[CO–8–91]

Proposed Collection; Comment Request for Regulation Project

AGENCY: Internal Revenue Service (IRS), Treasury.

ACTION: Notice and request for comments.

SUMMARY: The Department of the Treasury, as part of its continuing effort to reduce paperwork and respondent burden, invites the general public and other Federal agencies to take this opportunity to comment on proposed and/or continuing information collections, as required by the Paperwork Reduction Act of 1995, Public Law 104–13 (44 U.S.C. 3506(c)(2)(A)). Currently, the IRS is soliciting comments concerning an existing final regulation, CO–8–91 (TD 8643), Distributions of Stock and Stock Rights (Section 1.305–5(b)(5)).

DATES: Written comments should be received on or before June 5, 2000 to be assured of consideration.

ADDRESSES: Direct all written comments to Garrick R. Shear, Internal Revenue Service, room 5244, 1111 Constitution Avenue NW., Washington, DC 20224.

FOR FURTHER INFORMATION CONTACT: Requests for additional information or copies of the regulation should be directed to Martha R. Brinson, (202) 622–3869, Internal Revenue Service, room 5244, 1111 Constitution Avenue NW., Washington, DC 20224.

SUPPLEMENTARY INFORMATION:

Title: Distributions of Stock and Stock Rights.

OMB Number: 1545–1438.

Regulation Project Number: CO–8–91.

Abstract: The requested information is required to notify the Service that a holder of preferred stock callable at a premium by the issuer has made a determination regarding the likelihood of exercise of the right to call that is different from the issuer's determination.

Current Actions: There is no change to this existing regulation.

Type of Review: Extension of a currently approved collection.

Affected Public: Individuals or households, and business or other for-profit organizations.

Estimated Number of Respondents: 2,000.

Estimated Time Per Respondent: 10 minutes.

Estimated Total Annual Burden Hours: 333.

The following paragraph applies to all of the collections of information covered by this notice:

An agency may not conduct or sponsor, and a person is not required to respond to, a collection of information unless the collection of information displays a valid OMB control number. Books or records relating to a collection of information must be retained as long as their contents may become material in the administration of any internal revenue law. Generally, tax returns and tax return information are confidential, as required by 26 U.S.C. 6103.

Request for Comments

Comments submitted in response to this notice will be summarized and/or included in the request for OMB approval. All comments will become a matter of public record. Comments are invited on: (a) Whether the collection of information is necessary for the proper performance of the functions of the agency, including whether the information shall have practical utility; (b) the accuracy of the agency's estimate of the burden of the collection of information; (c) ways to enhance the quality, utility, and clarity of the information to be collected; (d) ways to minimize the burden of the collection of information on respondents, including through the use of automated collection techniques or other forms of information technology; and (e) estimates of capital or start-up costs and costs of operation, maintenance, and purchase of services to provide information.

Approved: March 27, 2000.

Garrick R. Shear,

IRS Reports Clearance Officer.

[FR Doc. 00–8577 Filed 4–5–00; 8:45 am]

BILLING CODE 4830–01–U

DEPARTMENT OF VETERANS AFFAIRS

[OMB Control No. 2900–0113]

Proposed Information Collection Activity: Proposed Collection; Comment Request

AGENCY: Veterans Benefits Administration, Department of Veterans Affairs.

ACTION: Notice.

SUMMARY: The Veterans Benefits Administration (VBA), Department of Veterans Affairs (VA), is announcing an opportunity for public comment on the proposed collection of certain information by the agency. Under the Paperwork Reduction Act (PRA) of 1995, Federal agencies are required to publish notice in the **Federal Register** concerning each proposed collection of information, including each proposed revision of a currently approved collection, and allow 60 days for public comment in response to the notice. This notice solicits comments on applicants' qualifications to become a fee basis appraiser to appraise residential real estate.

DATES: Written comments and recommendations on the proposed collection of information should be received on or before June 5, 2000.

ADDRESSES: Submit written comments on the collection of information to Nancy J. Kessinger, Veterans Benefits Administration (20S52), Department of Veterans Affairs, 810 Vermont Avenue, NW, Washington, DC 20420. Please refer to ''OMB Control No. 2900–0113'' in any correspondence.

FOR FURTHER INFORMATION CONTACT: Nancy J. Kessinger at (202) 273–7079 or FAX (202) 275–5947.

SUPPLEMENTARY INFORMATION: Under the PRA of 1995 (Public Law 104–13; 44 U.S.C., 3501–3520), Federal agencies must obtain approval from the Office of Management and Budget (OMB) for each collection of information they conduct or sponsor. This request for comment is being made pursuant to Section 3506(c)(2)(A) of the PRA.

With respect to the following collection of information, VBA invites comments on: (1) Whether the proposed collection of information is necessary for the proper performance of VBA's functions, including whether the information will have practical utility; (2) the accuracy of VBA's estimate of the burden of the proposed collection of information; (3) ways to enhance the quality, utility, and clarity of the information to be collected; and (4) ways to minimize the burden of the collection of information on respondents, including through the use of automated collection techniques or the use of other forms of information technology.

Title: Application for Fee Personnel Designation, VA Form 26–6681.

OMB Control Number: 2900–0113.

Type of Review: Revision of a currently approved collection.

Abstract: The form solicits information on the fee personnel applicant's background and experience in the real estate valuation field. VA regional offices and centers use the information contained on the form to evaluate applicants' experience for the purpose of designating qualified individuals to serve on the fee roster for their stations.

Affected Public: Individuals or households.

Estimated Annual Burden: 3,100 hours.

Estimated Average Burden Per Respondent: 30 minutes.

Frequency of Response: On occasion.

Estimated Number of Respondents: 6,200.

Dated: March 15, 2000.

Sandra McIntyre,

Management Analyst, Information Management Service.

[FR Doc. 00–8424 Filed 4–5–00; 8:45 am]

BILLING CODE 8320–01–P

Corrections

Federal Register

Vol. 65, No. 67

Thursday, April 6, 2000

This section of the FEDERAL REGISTER contains editorial corrections of previously published Presidential, Rule, Proposed Rule, and Notice documents. These corrections are prepared by the Office of the Federal Register. Agency prepared corrections are issued as signed documents and appear in the appropriate document categories elsewhere in the issue.

DEPARTMENT OF DEFENSE DEPARTMENT OF VETERANS AFFAIRS

38 CFR Part 21

RIN 2900–AJ87

Veterans Education: Increased Allowances for the Educational Test Program

Correction

In rule document 00–6216 beginning on page 13693 in the issue of Tuesday, March 14, 2000, make the following corrections:

§21.5820 [Corrected]

1. On page 13694, in the first column, in §21.5820(b)(2)(ii)(C), in the fourth line, the ''4'' should read ''4¢''.

2. On the same page, in the same column, in the same section, in the fifth line, the ''2'' should read ''2¢''.

[FR Doc. C0–6216 Filed 4–5–00; 8:45 am]

BILLING CODE 1505–01–D

DEPARTMENT OF THE TREASURY

Customs Service

[T.D. 00-18]

Geographic Boundaries of Customs Brokerage, Cartage, and Lighterage Districts

Correction

In the issue of Thursday, March 23, 2000, on page 15687, in the correction of notice document number 00-6263, in the third column, in the ''Ports of entry'' column, under the heading ''Missouri'', ''St. Wichita'' should read,''Wichita, KS''.

[FR Doc. C0–6263A Filed 4–5–00; 8:45 am]

BILLING CODE 1505–01–D

Federal Register

Thursday,
April 6, 2000

Part II

Department of Commerce

U.S. Patent and Trademark Office

37 CFR Part 1

Rules To Implement Optional Inter Partes Reexamination Proceedings; Proposed Rule

DEPARTMENT OF COMMERCE

U.S. Patent and Trademark Office

37 CFR Part 1

[Docket No. 000308064–0064–01]

RIN 0651–AB04

Rules To Implement Optional Inter Partes Reexamination Proceedings

AGENCY: U.S. Patent and Trademark Office, Commerce.

ACTION: Notice of proposed rulemaking.

SUMMARY: The U. S. Patent and Trademark Office (the Office) is proposing to amend its rules of practice in patent cases to provide revised procedures for the reexamination of patents and thereby implement certain provisions of ''the American Inventors Protection Act of 1999.'' ''The American Inventors Protection Act of 1999'' included an amendment to the Patent Act to authorize the extension of reexamination proceedings via an optional *inter partes* reexamination procedure in addition to the present *ex parte* reexamination procedure as a means for improving the quality of United States patents. The Office intends, through this amendment of its rules, to provide patent owners and the public with guidance on the procedures that the Office will follow in conducting optional inter partes reexamination proceedings in addition to the present *ex parte* reexamination proceedings.

The American Inventors Protection Act of 1999'' also made other miscellaneous changes to the Patent Act which relate to reexamination, and it is intended that this amendment of the Office's rules will implement those changes relating to reexamination.

DATES: *Comment Deadline Date:* To ensure consideration of written comments, they must be received at the Office no later than June 12, 2000. While comments may be submitted after this date, the Office cannot ensure that consideration will be given to such comments. No public hearing will be held.

Public Inspection of Comments: Written comments will be available for public inspection on or about June 20, 2000.

ADDRESSES: Those interested in submitting written comments should send their written comments to the attention of Kenneth M. Schor, Senior Legal Advisor, by electronic mail message over the Internet addressed to reexam.rules@uspto.gov and titled *''Inter Partes* Reexamination.'' Written comments may also be submitted by mail addressed to U.S. Patent and Trademark Office, Box Comments—Patents, Commissioner for Patents, Washington, DC 20231, marked to the attention of Kenneth M. Schor; or by facsimile transmission to (703) 872–9408, marked to the attention of Kenneth M. Schor. Although comments may be submitted by e-mail, mail, or facsimile, the Office prefers to receive comments via e-mail over the Internet. Where comments are submitted by mail, the Office would prefer that the comments be submitted on a DOS formatted 3¼ inch disk accompanied by a paper copy.

Written comments will be available for public inspection at the Patent Examination Policy Law Office, Office of the Deputy Assistant Commissioner for Patent Policy and Projects, located at Crystal Plaza Four, Room 3C23 (receptionist), 2201 South Clark Place, Arlington, Virginia. In addition, written comments in electronic form may be made available via the Office's World Wide Web site at http://www.uspto.gov.

FOR FURTHER INFORMATION CONTACT: Kenneth M. Schor or Gerald A. Dost, Senior Legal Advisors. Kenneth M. Schor may be contacted (a) by telephone at (703) 305–1616; (b) by mail addressed to: U.S. Patent and Trademark Office, Box Comments—Patents, Commissioner for Patents, Washington, DC 20231, marked to the attention of Kenneth M. Schor; (c) by facsimile transmission to (703) 872–9408, marked to the attention of Kenneth M. Schor; or (d) by electronic mail message over the Internet addressed to reexam.rules@uspto.gov and titled *''Inter Partes Reexamination.''*

Gerald A. Dost may be contacted (a) by telephone at (703) 305–1616; (b) by mail addressed to: U.S. Patent and Trademark Office, Box Comments—Patents, Commissioner for Patents, Washington, DC 20231, marked to the attention of Gerald A. Dost; (c) by facsimile transmission to (703) 308–6916, marked to the attention of Gerald A. Dost; or (d) by electronic mail message over the Internet addressed to reexam.rules@uspto.gov and titled *''Inter Partes* Reexamination.''

SUPPLEMENTARY INFORMATION:

Background

This proposed rulemaking sets forth distinct procedures directed toward determining and improving the quality and reliability of United States patents. The procedures provide for the optional *inter partes* reexamination procedures in addition to the present *ex parte* reexamination procedures for the reexamination of patents as provided for by the American Inventors Protection Act of 1999 as part of the conference report (H. Rep. 106–479) on H.R. 3194, Consolidated Appropriations Act, Fiscal Year 2000. The text of the American Inventors Protection Act of 1999, is contained in Title IV of S. 1948, the Intellectual Property and Communications Omnibus Reform Act of 1999 (Pub. L. 106–113), the Act which is incorporated by reference in Division B of the conference report. The procedures also provide for implementation of other miscellaneous changes to the reexamination of patents also provided for in Public Law 106–113.

In 1995, the Office published proposed rules in anticipation of H.R. 1732, 104th Cong., 1st Sess. (1995), a predecessor for the present *inter partes* reexamination statute. H.R. 1732 did not, however, mature into a statute. H.R. 1732 resulted from suggestions and comments to the Administration by the public, bar groups, and the August 1992 Advisory Commission on Patent Law Reform suggesting more participation in the reexamination proceeding by third-party requesters. In response to H.R. 1732, the Office issued a Notice of Proposed Rulemaking entitled ''Rules of Practice in Patent Cases; Reexamination Proceedings,'' which Notice was published in the **Federal Register** at 60 FR 41035 (August 11, 1995) and in the *Official Gazette* at 1177 Off. Gaz. Pat. Office 130 (August 22, 1995). Sixteen written comments were received in response to the August 1995 Notice of Proposed Rulemaking. A public hearing was held at 9:30 a.m. on September 20, 1995. Eight individuals offered oral comments at the hearing. The sixteen written comments and a transcript of the hearing are available for public inspection in the Patent Examination Policy Law Office, Office of the Deputy Commissioner for Patent Examination Policy, located at Crystal Plaza Four, Room 3C23 (receptionist), 2201 South Clark Place, Arlington, Virginia. The present proposed rulemaking addresses, and takes into consideration, the comments received in response to the 1995 proposed rules.

Discussion of General Issues Involved

This proposed rulemaking is in response to Public Law 106–113, the Act which resulted from suggestions and comments to the Administration by the public, bar groups, and the August 1992 Advisory Commission on Patent Law Reform suggesting more participation in the reexamination proceeding by third-party requesters. Under the *inter partes* reexamination rules proposed herein, third-party

requesters will have greater opportunity to participate in reexamination proceedings in keeping with the spirit and intent of the new law. At the same time, participation will be limited to minimize the costs and other effects of reexamination requests on patentees, especially individuals and small businesses.

Ex parte reexamination proceedings filed under Chapter 30 of 35 U.S.C. (both before and after the effective date, November 29, 1999, of the new law) will continue to be governed by 37 CFR 1.501–1.570. The proposed rules for optional *inter partes* reexaminations under Chapter 31 of 35 U.S.C. have been numbered 37 CFR 1.902–1.997.

The effective date of the statute with respect to the optional *inter partes* reexamination proceedings as well as to the existing *ex parte* reexamination proceedings is complex. With the exception of the amendments to 35 U.S.C. 41(a)(7) directed to the revival of terminated *ex parte* and *inter partes* reexamination proceedings, the new statute and the conforming amendments to the present statute take effect on the date of enactment, November 29, 1999. The changes, however, only apply to a reexamination of a patent that issues from an original application which was filed in the United States on or after November 29, 1999. Thus, for i*nter partes* reexaminations, the effective date language (in section 4608 of S. 1948) limits the applicability of the new *inter partes* reexamination Chapter 31 of 35 U.S.C., and that of the conforming amendments to 35 U.S.C. 134, 141, 143 and 145, to any patent that issues from an original application filed in the United States on or after November 29, 1999, the effective date of Public Law 106–113. For *ex parte* reexaminations filed under Chapter 30 of 35 U.S.C., the conforming amendments to 35 U.S.C. 134, 141, 143 and 145, only apply to those *ex parte* reexamination proceedings filed under § 1.510 for patents that issue from an original application that is filed in the United States on or after November 29, 1999. The conforming amendments to 35 U.S.C. 134, 141, 143 and 145, correspondingly, will not apply to *ex parte* reexamination proceedings filed under § 1.510 for patents that issue from an original application filed in the United States prior to November 29, 1999.

The conforming amendments also amend 35 U.S.C. 41(a)(7) to include the words ''any reexamination proceeding'' under the ''unintentional'' revival provisions of the statute for an unintentionally delayed response by the patent owner in any reexamination proceeding. These words ''any reexamination proceeding'' clearly make this section applicable to both *ex parte* reexaminations and *inter partes* reexaminations. The effective date of the amendment to 35 U.S.C. 41(a)(7), however, is one year after the date of enactment of the Act, or November 29, 2000. See section 4608 of S. 1948. Thus, as of November 29, 2000, any *ex parte* or *inter partes* reexamination filed before, on, or after November 29, 2000, is subject to the ''unintentional'' revival provisions of the statute.

Regarding the reexamination fee, 35 U.S.C. 41(d) requires the Director of the United States Patent and Trademark Office (the Director) to set the fee for the new optional *inter partes* reexamination at a level which will recover the estimated average cost of the reexamination proceeding to the Office. The estimated average cost is $8,800 for an *inter partes* reexamination proceeding. The difference in price between an *ex parte* reexamination ($2,520) and an *inter partes* reexamination ($8,800) takes into account that the Office will expend substantially more resources for examination, supervision, training, etc., where the third-party requester participates in an *inter partes* reexamination proceeding, and for the additional processing steps that are expected during an *inter partes* reexamination proceeding.

Considerations of the Comments Responding to the August 1995 Notice of Proposed Rulemaking

In 1995 the Office published proposed rules in anticipation of a predecessor bill to the present *inter partes* reexamination statute, which bill did not mature into a statute. The Office issued a notice of proposed rulemaking entitled ''Rules of Practice in Patent Cases; Reexamination Proceedings,'' which was published in the **Federal Register** at 60 FR 41035 (August 11, 1995) and in the *Official Gazette* at 1177 Off. Gaz. Pat. Office 121 (August 22, 1995). Sixteen written comments were received in response to the August 1995 notice. Also, a public hearing was held on September 20, 1995, during which eight individuals offered oral comments. The following 28 issues summarize the comments, and the Office response.

Issue 1

Eleven comments addressed the issue of the reexamination filing fees set in the August 11, 1995, Notice of Proposed Rulemaking. The fees set in 1995 were $4,500 for a request by a patent owner and $11,000 for a request by a third-party requester. The discussion below relates to the 1995 proposed fees. The current proposed $8,800 *inter partes* reexamination fee is the result of a reevaluation of the *inter partes* reexamination parameters, and how *inter partes* reexamination will be conducted in view of the comments.

A first comment questioned why the reexamination filing fees set in the August 11, 1995, Notice of Proposed Rulemaking were many times those for original and reissue applications. A second comment questioned the disparity between fees for the patent owner and the third-party requester, suggesting that more reasonable fees be set initially until actual costs become known, since higher fees will discourage reexaminations. Further, it was urged that the distinction in the fees was inappropriately being based upon the legal positions of the parties (upholding or striking down a patent). Even further, it was pointed out that the fee structure provides a possibility of a windfall of $15,500 should both a patent owner and a third-party requester file a request for reexamination. A third comment asserted that the disparity was greater than a factor of two, whereas the reason given was that it would entail twice the effort. A fourth comment supported the fees, suggesting that the fee of $11,000 will discourage inappropriate requests and the harassing of individual inventors and small businesses. A fifth comment suggested that the cost of the reexamination proceedings be subsidized by fees collected from other services offered by the Office, that the fees should be apportioned in stages and charged as the reexamination progresses (*e.g.,* higher fees for appeals), and that there should be legislation to permit small entity discounts for reexamination fees. A sixth comment also suggested that the fees should be apportioned and charged as the reexamination progresses. The sixth comment additionally suggested that if the higher fees are warranted, there should be a more thorough examination of all cited and searched prior art by an independent supervisory examiner or a board of three examiners. A seventh comment asserted that since no new search is required of the examiner in the reexamination proceeding, the time and effort expended in a reexamination do not warrant a fee that is 14 times that of a regular application, which is not consistent with Congressional intent to provide a low cost alternative to litigation, and in view of the alternative to prepare and file another patent application and where appropriate initiate a more costly interference

proceeding. An eighth comment suggested that there should be a special reduced fee for reexamination requested within a short period (*e.g.,* six months) following the issuance of a patent, since the reexamination could be assigned to an examiner already familiar with the case, which fee should be the same as a continuing application for patent owners and double for third-party requesters. The ninth and tenth comments were directed to the impact of the $11,000 fee on independent inventors and small companies. The ninth comment suggested that the fees favored large businesses. The tenth comment suggested that a fee waiver system similar to that for Freedom of Information Act (FOIA) requests be adopted. In contrast, the eleventh comment stated that the fee was not a pivotal issue with respect to third parties participating in reexaminations, rather the pivotal issue is the perception today (under current rules) that the reexamination proceeding is not a level playing field. Accordingly, the fee should not be subsidized.

Response to Issue 1

Initially, it is noted that the *inter partes* reexamination fee structure has been reevaluated by the Office. The estimated average cost is $8,800 for an *inter partes* reexamination. Accordingly, § 1.20, as proposed in the present rule making, will require a filing fee of $8,800 for an *inter partes* reexamination under § 1.915(a).

As to the first and seventh comments asserting the disparity between costs for a regular patent application and an *inter partes* reexamination, it is not appropriate to compare these figures. Fees for filing an application are set by statute under 35 U.S.C. 41(a) and are not set at a cost recovery level. In fact, the statutory filing fee for an application is much lower than the average cost of the examination of the application. In contrast, the statutory patent maintenance fees set forth in 35 U.S.C. 41(b) are a significant source of income to the Office for very little actual work, which are, in effect, an offset for the application filing fee. On the other hand, the reexamination fees under 35 U.S.C. 41(d) must fully recover the cost of the reexamination. The submissions will be numerous in an *inter partes* reexamination proceeding, e.g., multiple responses and comments by the patent owner and third-party requester responsive to the Office and to each other. Further, these responses and comments are expected to be thorough and extensive which in turn must be analyzed by the examiner, requiring the expenditure of substantial time and resources. The additional examination hours, supervisory oversight, and other processing steps unique to *inter partes* reexamination have to be factored into the fees. The *inter partes* examination process is expected to require close policy oversight by legal advisors in the Patent Examination Policy Law Office, in addition to the extra resources needed to handle the anticipated increased number of submissions by the parties. The reexamination filing fee being set in the present rule package is $8,800 for filing a request for an *inter partes* reexamination under proposed § 1.913(a). This fee is considered to be appropriate based on the Office projections of the amount of work that will be required.

As to the second and third comments, directed to the disparity between fees for the patent owner and the third-party requester, it is noted that the current statute retains the current *ex parte* reexamination statute and provides an optional *inter partes* reexamination. It is anticipated that the expense of an *inter partes* reexamination will be substantially more than the expense of an *ex parte* reexamination and, consequently, the fees reflect this. Generally speaking, during the examination of an *ex parte* reexamination, the examiner applies the best art and normally limits the number of rejections made for a given claim to the best grounds. When responding to a third-party requester of an *inter partes* reexamination, the Office's preparation of an Office action will include responding to all of the multiple alleged grounds for rejections put forward (proposed) by the third-party requester. All of the grounds proposed by the third-party requester must be addressed by the examiner, because any proposed ground of rejection not adopted is a decision favorable to patentability which is subject to appeal by the third-party requester to the Board of Patent Appeals and Interferences. Thus, the extra effort needed for an *inter partes* reexamination entails not merely responding to amendments and arguments of the patent owner, but the substantially higher burden of responding to the arguments of the third-party requester and the many multiple decisions as to why a particular rejection is or is not an appropriate one to make. As to the second comment in particular, the difference in the amount of the fees is based on these projected costs and not on the legal position of the parties. As to the fourth comment regarding the discouragement of inappropriate requests, the setting of the filing fees is strictly based on cost expectations and not for the purpose of discouraging inappropriate reexamination requests.

Subsidizing of the cost of the reexamination proceedings (as suggested by the fifth comment and opposed by the eleventh comment) through increased costs to users of other services offered by the Office (as an alternative to pricing based on cost recovery) would naturally be viewed with disfavor by the users of other services. Also, the Office is not authorized to permit small entity reductions in reexamination filing fees. As to the suggestion regarding the apportionment of costs in stages as the proceeding evolves (e.g., higher fees at the appeal stage) (mentioned in the fifth and sixth comments), this is not practical since there would be no way to guarantee recovery of the total cost of reexamination. A third-party requester may decide to drop out of the reexamination and not pay the next required fee. The reexamination, however, would have to continue to resolve issues that had been raised. Moreover, appeal fees are set by statute under 35 U.S.C. 41(a)(6) and are not part of the reexamination filing fee. As to the utilization of a team of examiners to facilitate a review by a panel prior to forwarding the reexamination to the Board of Patent Appeals and Interferences, it is anticipated that appeal conferences will be made mandatory so that all work of an examiner will be thoroughly reviewed prior to the filing of an examiner's answer. Implementation of such review is better set by Office policy rather than by rule making.

As to the suggestion in the eighth comment that the fees be reduced for filing a request for reexamination within a short period (e.g., six months) following the issuance of a patent, reexaminations are generally based upon new prior art raising new issues so that the benefits (if any) of filing a reexamination within a short time after issuance of a patent would not warrant a reduction in fees. The ninth and tenth comments were directed to the impact the $11,000 fee required in the August 11, 1995, Notice of Proposed Rulemaking (for all reexaminations) will have on independent inventors and small companies. With respect to this, it should be noted that, as the statute has now been drafted and passed into law (Pub. L. 106–113), the filing of an *ex parte* reexamination is still available to a third-party requester, and the filing fee for such is $2,520. Thus, a less costly *ex parte* reexamination will be available to members of the public who may not be able to afford a full scale *inter partes*

reexamination which has a currently proposed filing fee of $8,800.

Issue 2

Two comments in response to the August 11, 1995, Notice of Proposed Rulemaking suggested that the Office reconsider the refund provisions. One comment suggested that the 75% refund of the fee should be reduced, since third parties who file unjustified requests should not be rewarded by so great a refund. Another comment suggested that the difference between the fees for a patent owner and a third-party requester varied by more than a factor of two and that it was difficult to rationalize why a refund of 75% would be provided for both instead of charging a flat fee of $1500 if the Director decides not to institute a reexamination proceeding (since the amount of work done in both cases should not differ).

Response to Issue 2

The comments have been adopted. Section 1.26(c), as currently proposed, sets the amount of refund to provide for the retention of a uniform fee of $830, with the remainder of the filing fee being refunded, for all reexamination requests where the Director decides not to institute a reexamination proceeding. For the *ex parte* reexamination fee of $2,520, an amount of $1,690 will be returned, thus resulting in a retention of $830. For the *inter partes* reexamination fee of $8,800, an amount of $7,970 will be returned, again resulting in a retention of $830. The amount of $830 being retained by the Office is based on projected cost expectations and is not for the purposes of penalizing unwarranted requests, since it is neither desirable nor appropriate to penalize parties for whom requests for reexamination are denied.

Issue 3

One comment in response to the August 11, 1995, Notice of Proposed Rulemaking suggested that the third-party requester should be required to certify that the request for reexamination contains all information that the requester regards as materially adverse to the patentability of the patent.

Response to Issue 3

This suggestion has not been adopted since it is in the third-party requester's best interests to submit all information that the requester regards as materially adverse to patentability with the request for reexamination in order to increase the possibility of the request for reexamination being granted. Moreover, proposed § 1.948 of the present rule package now provides that prior art submissions by the third-party requester filed after the *inter partes* reexamination order shall be limited to: (1) Any prior art which is necessary to rebut a finding of fact by the examiner or a response of the patent owner; or (2) any prior art which became known or available to the third-party requester after the filing of the *inter partes* reexamination proceeding. This is additional incentive to submit all known (and available) material prior art with the request.

Issue 4

Four comments in response to the August 11, 1995, Notice of Proposed Rulemaking were directed to the selection of the examiner and/or number of examiners. A first comment opined that it was Office practice to assign the reexamination to the examiner who originally examined and issued the patent and not on the basis of the classification of the art. The comment further noted the assignment to the same examiner defeats the underlying purpose of reexamination and petitioning for a transfer to a different art unit based on the classification of the art can also be unsuccessful, despite the ''Transfer Procedure'' in MPEP Section 2237 for those times when a reexamination request should be assigned to a different group art unit. The comment suggested that if a third-party requester requests a reexamination, it should be conducted by a different examiner, and further, if appropriate, assigned to a different art unit. A second comment noted that § 1.931(b) of the August 11, 1995, Notice of Proposed Rulemaking provides the only limitation placed on the selection of the examiner, namely that an examiner whose decision refusing reexamination has been reversed will not ordinarily conduct the reexamination. The comment suggested reevaluating the practice of assigning the same examiner who prosecuted the application which issued as a patent to conduct the reexamination, since many practitioners feel that the original examiner may have a bias against fully considering prior art during a reexamination proceeding. A third comment stated that since an *inter partes* reexamination proceeding is more complicated to manage than an *ex parte* reexamination proceeding, the *inter partes* reexamination proceeding is likely to require a higher degree of technical and legal competence in making a determination of patentability than is normally required in an *ex parte* reexamination proceeding. An examiner in an *inter partes* reexamination proceeding will be required to weigh and assess the credibility of often conflicting arguments, theories of operation, and evidence when making a determination of patentability. Although statistics appear to indicate that there is no inherent bias in the conduct of a reexamination proceeding when the proceeding is assigned to the same examiner who issued the patent, many perceive a bias (in favor of the patent owner) when the reexamination proceeding is assigned to the same examiner. The comment advocated assigning the reexamination proceeding to the best qualified examiner available, given the technical, legal, and procedural complexities that are likely to arise in the reexamination proceeding. The comment also suggested the formation of a separate unit of examiners to handle the new reexamination proceedings, or at least those which involve a third-party requester. The fourth comment suggested that the number of examiners be increased from one to three, including a supervisory primary examiner and a Group Director, in order to increase the probability of a ''correct'' decision and develop a higher degree of confidence in the reexamination process, and avoid situations where a third-party requester feels the examiner did not understand the prior art, the interview, or the declarations, etc. The comment suggested that the small increase in Office costs, and fees to be charged to participants, will probably be offset by having fewer appeals (and law suits) filed (which is of benefit to the public), and will still be a cost-effective means of resolving patent disputes, as compared to litigation. The fifth comment suggested that more than one examiner be responsible for issuing the Right of Appeal Notice, similar to the European Patent Office. Modification of the proposed rules to allow a decision from a panel of three capable examiners, would result in a higher degree of quality in the reexamination process and less ancillary issues later being raised (such as examiner bias or an examiner's lack of understanding of the relevant art or law). The comment suggested that the panel could include, for example, a legal specialist within the Examining Group, the original examiner of the application, and a primary examiner having knowledge of the relevant technical field and the record would reflect when a panel member concurs or dissents.

Response to Issue 4

As to the selection of the examiner, studies conducted by the Office have not discovered any bias irrespective of whether the same or a different

examiner handles the reexamination. The same examiner should not be biased toward confirming patentability, because a reexamination is not a rehash of old issues, but rather, a new question of patentability. In spite of the above, the Office is, for the most part, adopting the comment suggesting assignment of the reexamination to an examiner other than the one who originally examined and issued the patent. The comment is being adopted in order to eliminate public perception of bias by the original examiner who handled the patent. The comment will be implemented as a matter of policy, rather than by rule change. The MPEP will be revised to set policy that unless a Group Director needs to make an exception, a reexamination will not be assigned to a Supervisory Patent Examiner, a primary examiner, or a junior examiner who was actually involved (by preparing/signing an action on the merits) in the examination and issuance of the patent undergoing reexamination.

As to the Office personnel to be involved in the reexamination proceedings, the Office is considering the creation of a special group/unit having legal advisors trained in *inter partes* reexamination procedures to oversee the examination of the *inter partes* reexamination by the patent examiner in the examining group. For technical expertise, an examiner selected from the groups will be assigned the reexamination. The advantage of such a special group/unit is that it will include the examiner most familiar with the technology to make the patentability decisions and legal advisors to provide uniformity of the reexamination practice and procedure.

As to the comment suggesting that the number of examiners handling a reexamination proceeding be increased from one to three, the following is to be noted. In order to provide a thorough review by a team of examiners, a practice is being considered to hold a panel review just prior to the decision on the request for reexamination (order/denial) is issued and at the close of prosecution (i.e., just prior to ''allowance'' of the reexamination or just prior to issuing a right of appeal notice and final rejection). The panel review will be similar to the appeal conference review done in an application on appeal. It should further be noted that appeal conferences are already mandatory before a reexamination leaves the examiner for a decision by the Board of Patent Appeals and Interferences. If adopted, this will be implemented as a matter of policy, rather than by rule change.

Issue 5

One comment responding to the August 11, 1995, Notice of Proposed Rulemaking suggested that the content of the ''prior art'' made available for review by the Office should also include *inter partes* sworn testimony of the inventor(s) and others associated with the implementation of the invention and any patent work thereon covering their knowledge of the known prior art, related industry practices, and the like, which evidence may also impeach the inventor(s) and others in the sense of withholding known prior art from the Office.

Response to Issue 5

The Advisory Commission on Patent Law Reform: A Report to the Secretary of Commerce, August 1992, at page 117, recommended limitations on the scope of documentary prior art evidence and cautioned against reliance on testimonial evidence in light of the abuses of the process which occurred in the reissue protest proceedings under the Dann Amendments. The Commission found the Office to be an inappropriate forum for addressing all issues of validity. Affidavits or declarations which merely explain the contents or pertinent dates of prior patents or printed publications in more detail may be considered during reexamination, but any rejection must be in accordance with proposed § 1.906(a) (Scope of reexamination in reexamination proceeding). Proposed § 1.906(a) limits the scope of reexamination in that claims in an *inter partes* reexamination proceeding will be examined on the basis of patents or printed publications and, with respect to subject matter added or deleted in the reexamination proceeding, on the basis of the requirements of 35 U.S.C. 112.

Issue 6

One comment in response to the August 11, 1995, Notice of Proposed Rulemaking suggested that when an examiner allows a claim, the decision of the examiner should be supported by a well-reasoned opinion establishing the examiner's reasons for allowance. The comment stated that although § 1.109 provides that the examiner ''may set forth such reasoning'' for the allowance, this is rarely done and often with only a brief note. It was pointed out that well-reasoned opinions are critically important in inter partes reexamination procedure to third-party requesters (or patent owners) who are actively participating and who need the reasons for allowance (or for final rejection) in deciding whether to appeal.

Response to Issue 6

Office policy will direct the examiner to make a complete record of the reasons for allowing or rejecting a claim at various stages during the proceeding. Note further that, according to currently proposed § 1.953 (Examiner's Right of Appeal Notice), the Right of Appeal Notice is required to include ''an identification of the status of each claim, and the reasons for patentability and/or the grounds of rejection for each claim.'' Thus, the examiner's reasons for patentability and/or the grounds of rejection will be available in *inter partes* reexamination procedure to the third-party requesters (and patent owners) who are actively participating and who need the reasons for allowance (or the grounds for final rejection) in deciding whether to appeal.

Issue 7

One comment in responding to the August 11, 1995, Notice of Proposed Rulemaking questioned whether in view of the new fee structure, the examiner will be required to do a new search of the prior art.

Response to Issue 7

The Office has chosen to rely upon the examiner's judgment and expertise in determining how much searching should be done in the reexamination proceeding. If the examiner believes that additional prior art patents and publications can be readily obtained by searching to supply any deficiencies in the prior art cited in a request, the examiner has the option of performing an additional search. The examiner is not required to, and will not routinely, make a full search.

Comments Directed to Specific Rules

Issue 8

One comment stated the belief that § 1.901 of the August 11, 1995, Notice of Proposed Rulemaking (which relates to the submission of prior art) places an unnecessary burden on a person to cite art to be placed in the file of an issued patent. A patentee who obtains prior art as a result of a foreign search report or by a competitor may believe it to be irrelevant and should be encouraged to file it without any statement that the art is pertinent, since it may turn out to be relevant when combined with other unknown prior art.

Response to Issue 8

Current § 1.501 is being retained, and thus there is no need for proposed § 1.901 of the August 11, 1995, Notice of Proposed Rulemaking which was to track and replace § 1.501. Section 1.501

provides a system for citation of patents and printed publications to the Office for placement in the patent file by any person during the period of enforceability of the patent in accordance with 35 U.S.C. 301. Section 1.501 requires the citation to state the pertinency and applicability of the cited documents to the patent and the bearing the documents have on the patentability of at least one claim of the patent pursuant to the same statutory requirement set forth in 35 U.S.C. 301.

Issue 9

Two comments suggested clarification of the language of the third-party estoppel provisions proscribed by §§ 1.907 and 1.909 of the August 11, 1995, Notice of Proposed Rulemaking, specifically the language ''could have raised'' used in both rules. One comment recommended that the third-party requester have the same obligation to raise issues known to him as the patent owner has. Another comment opined that the phrase ''or could have raised during the prior reexamination proceeding'' could be construed broadly, so as to stop a third-party requester from challenging the invalidity of a claim based on prior art which was in the possession of the third-party requester at the time of a prior reexamination proceeding, but which was not discovered at that time. Thus, depending on how the expression ''could have'' is interpreted, this could place a substantial burden on a large corporation. It was also suggested that the duty of individuals to disclose information known to them to be material to patentability is another difficult provision, particularly the phrase ''and every other individual who is substantively involved on behalf of the patent owner in a reexamination proceeding.''

Response to Issue 9

35 U.S.C. 315(c) and 317(b) of the Act use the phraseology ''could have raised'' with respect to issues of the third-party. The Office, as the sole agency that administers the patent statute, properly interprets statutory language in the first instance, subject to review by the courts. The question of whether an issue could have been raised must be decided on a case-by-case basis, evaluating all the facts and circumstances of each individual situation. It would not be appropriate at this time to provide an ''all encompassing'' definition, that might not account for facts which could arise in the future which cannot be anticipated. As to the duty of disclosure, proposed § 1.933 is substantially unchanged from existing § 1.555, which was formulated to balance the interests of the patent owner with the benefits to the public interest of the disclosure of material prior art.

Issue 10

One comment suggested that § 1.915(b)(7) of the August 11, 1995, Notice of Proposed Rulemaking be amended to specifically refer to reexaminations under the newly proposed regulations. As § 1.915(b)(7) was drafted, the required certification that the person filing an additional reexamination during the pendency of an ongoing reexamination is not a privy of the patent owner or of the third-party requester of the ongoing reexamination would include an ongoing reexamination proceeding ordered under the old regulations. Since one of the purposes of the new reexamination legislation is to permit participation by a third-party requester, no useful or public purpose would be served by precluding a third-party requester from filing a request for reexamination under the new regulations where there was a pending reexamination initiated under the old regulations.

Response to Issue 10

The language of proposed § 1.915(b)(7) has been drafted to specifically refer to an *inter partes* reexamination; this should accurately track the statutory prohibition of a third-party requester of an ongoing (pending) *inter partes* reexamination from requesting another inter partes reexamination. Note, however, that the current proposed rules do not preclude an *ex parte* third-party requester from filing an *inter partes* reexamination request.

Issue 11

Two comments responding to the August 11, 1995, Notice of Proposed Rulemaking were directed to the identification of the real party in interest. One comment suggested that as to the identification of the real party in interest, § 1.915(b)(10) of the August 11, 1995, Notice needs to be clarified on the question of whether a third-party requester filing in the name of an attorney must be identified. A second comment suggested that the real party in interest should be identified at least by the time of filing of the notice of appeal to the Court of Appeals for the Federal Circuit.

Response to Issue 11

The real party in interest must be set out in the request. 35 U.S.C. 311(b)(1) requires that the request ''include the identity of the real party in interest.'' Proposed § 1.915(b)(8) (previously § 1.915(b)(10) in the 1995 rule package) tracks this provision of the statute and requires the requester to identify the real party in interest at the time of filing the request. If an attorney is filing a request for *inter partes* reexamination on behalf of another party, that other party must be identified. Thus, the third-party requester will be identified. As to the patent owner, proposed § 1.965(c)(1) requires the identification of the real party in interest at the time of the filing of the appellant brief, and proposed § 1.967(b)(1) requires the identification of the real party in interest at the filing of the respondent brief. Accordingly, the real parties in interest, for both the third-party requester and the patent owner, should be identified prior to an appeal to the Court of Appeals for the Federal Circuit by the patent owner (the current statute prohibits the third-party requester from appealing to the courts).

Issue 12

One comment responding to the August 11, 1995, Notice of Proposed Rulemaking was concerned that active third-party requesters representing large businesses could mount a series of attacks through ''fourth parties'' and ''tie up'' the invention of a small inventor for years.

Response to Issue 12

The statute is structured to balance the interests of the patent owners (to reduce costs and prevent harassment) and the public interest in promoting the validity of patents. Proposed § 1.907 tracks 35 U.S.C. 317 and is intended to prevent repeated challenges to the patent by third parties and their privies. In accordance with 35 U.S.C. 317(a), proposed § 1.907(a) prohibits the filing of a subsequent *inter partes* request for reexamination of the patent by the third-party requester or its privies until a reexamination certificate has been issued. In accordance with 35 U.S.C. 317(b), § 1.907(c) provides that if a final decision in an *inter partes* reexamination proceeding instituted by a third-party requester is favorable to patentability of a claim, the third-party requester and its privies may not later request another *inter partes* reexamination of any such patent claim on the basis of issues which that party, or its privies, raised or could have raised in such *inter partes* reexamination proceeding. Moreover, proposed § 1.915(b)(8) (previously § 1.915(b)(10) in the 1995 rule package) tracks 35 U.S.C. 311(b)(1) and requires the requester to identify the real party

in interest at the time of filing of the *inter partes* request.

Issue 13

One comment suggested that in regard to §§ 1.921 and 1.945 of the August 11, 1995, Notice of Proposed Rulemaking, supplemental responses and new prior art submissions should be permitted by the patent owner in order to substantiate certain points at issue (e.g., secondary considerations). It was further suggested that supplementation of responses be permitted. It was also suggested that submission of new publications by the third-party requester should be permitted in response to any amendment made by the patent owner which reduces the scope of the original claims.

Response to Issue 13

Proposed § 1.945 permits the patent owner to respond to any Office action, which response may include arguments and proposed amendments. There is no proscription regarding the submission of evidence relating to secondary considerations. As to third-party requesters, proposed § 1.948 provides that prior art submissions by the third-party requester filed after the *inter partes* reexamination order shall be limited to: (1) Any prior art which is necessary to rebut a finding of fact by the examiner or a response of the patent owner; or (2) any prior art which became known or available to the third-party requester after the filing of the *inter partes* reexamination proceeding. Accordingly, submission of new publications by the third-party requester in response to an amendment made by the patent owner which reduces the scope of the original claims would be permitted as a rebuttal of a ''response of the patent owner.''

Issue 14

One comment stated that as to § 1.927 of the August 11, 1995, Notice of Proposed Rulemaking, a determination by the Director refusing to initiate reexamination is final and nonappealable by a third-party. The rule should be amended to allow the third-party to appeal, since without an opportunity to appeal, a third-party's interests would be seriously jeopardized.

Response to Issue 14

Proposed § 1.927 of the present rule package (petition to review denial of the request for reexamination) has been drafted to track 35 U.S.C. 312(c). Proposed § 1.927 provides that ''[t]he third-party requester may seek review by a petition to the Director under § 1.181 within one month of the mailing date of the examiner's determination refusing reexamination. Any such petition must comply with § 1.181(b). If no petition is timely filed or if the decision on petition affirms that no substantial new question of patentability has been raised, the determination shall be final and nonappealable.'' Thus, although the third-party requester does not have an appeal right, it may obtain a review of the decision of the examiner refusing reexamination by filing a petition. If the decision on the petition, however, affirms that no substantial new question of patentability has been raised, the determination is final and nonappealable, as is statutorily required by 35 U.S.C. 312(c).

Issue 15

Two comments were directed to the length of briefs specified in § 1.943 of the August 11, 1995, Notice of Proposed Rulemaking. One comment suggested that the length of briefs would be more meaningful if the size of the paper and the type font were specified. A second comment stated that the page limitation on briefs in § 1.943 is too restrictive, especially for patent owners, since there is no limitation on the number of issues which a third-party can raise, which may require a longer response from the patent owner. It was suggested that the rule should permit longer briefs upon a showing of good cause.

Response to Issue 15

As to the first comment, this comment is being adopted. Section 1.943, as proposed in the present rule package, has been drafted to set forth (by reference to § 1.530(d)(5)) the requirements for responses, amendments, briefs, appendices and other documents including the size of the paper, the minimum size of the type font (11-point), the line spacing and the margin requirements.

As to the second comment, the 50-page limit for amendments proposed to be set in § 1.943 is considered to be sufficient to deal with the third-party requester's comments. Note that the 50-page limit excludes reference materials such as prior art references. Where an extraordinary situation arises where justice requires the 50-page limit to be exceeded, the patent owner may petition under § 1.183 to suspend the page limit requirement of § 1.943.

The page limit set in proposed § 1.943 of the present rule package for briefs is such that appellant briefs shall not exceed 30 pages or 14,000 words in length (excluding appendices of claims and reference materials), and all other briefs by any party shall not exceed 15 pages or 7,000 words in length. These numbers of pages are in line with procedural rules of the Federal Courts; see for example Rule 32(a)(7)(A) of the Federal Rules of Appellate Procedure or Rule 33 of the Rules of the Supreme Court of the United States (Practice & Procedure).

Issue 16

Several comments were concerned with the time periods for response and extensions of time. Two comments suggested that the time periods for response for § 1.945 (patent owner) and § 1.947 (third-party requester) of the August 11, 1995, Notice of Proposed Rulemaking should be a minimum of two months for each party. A third comment suggested only that the patent owner be given two months to respond. The first comment suggested that the first month extension should be available upon payment of a fee (as in regular patent applications), with further requests requiring justification or cause. The second comment suggested that §§ 1.945 and 1.947 should be made consistent with each other (30 days versus one month) to alleviate any confusion by stating the number in months. The second comment further suggested that the extension of time procedure is unworkable since the Office could not act on the request for an extension of time (if filed within the one-month period of time) before the deadline for the response. Instead, the usual extension of time procedure used for regular patent applications should be available. The fourth comment stated that the time periods for submitting a response, a written comment, an appeal brief, and a respondent brief and for appealing or cross-appealing (§§ 1.945, 1.947, 1.951, 1.953, 1.959, 1.963, 1.971, 1.973, 1.979, 1.983, and 1.993) are too short, especially for residents outside of the United States (due to mailing delay).

Response to Issue 16

Proposed § 1.947 of the present rule package has been drafted to provide for a 30-day response period (from service of the patent owner's response on the third-party requester) for third-party requester comments. This tracks the requirement of 35 U.S.C. 314 that third-party requester comments be filed ''within 30 days after the date of service of the patent owner's response.'' Proposed § 1.945 has been drafted to provide for an ''at least 30 days'' response period for the patent owner. This tracks the requirement of 35 U.S.C. 133 that the time for response to an Office action shall be ''not less than 30

days.'' A shortened statutory period of two months will generally be set for patent owner responses to Office actions on the merits; however, where litigation has been suspended pending a determination in the reexamination proceeding, or for a like reason, the period will be shortened to one month or 30 days as is appropriate.

The suggestion that §§ 1.945 and 1.947 be made consistent with each other has been adopted to the extent that the currently proposed rules (§§ 1.945 and 1.947) recite both time periods in terms of days rather than months. The period for the patent owner response to an Office action will not, however, be made 30 days to correspond to the third-party comment period mandated by statute. While the statute limits the third-party requester to 30 days to comment on patent owner responses, a longer period for the patent owner to respond is appropriate in view of the potential need for counsel to consult with the patent owner, consider amendments, etc.

As to extensions of time, 35 U.S.C. 305 provides that all reexamination proceedings will be conducted with special dispatch within the Office. Section 1.956 provides that extensions of time will be available to the patent owner upon a showing of sufficient cause. Third-party requester's 30-day time period for comments is statutory; thus, it cannot be extended. This is consistent with the recommendation (VII–B) of *The Advisory Commission on Patent Law Reform: A Report to the Secretary of Commerce, August 1992* to provide for the opportunity for the third-party requester to submit written comments ''within strict time deadlines.''

Issue 17

One comment suggested that, as to § 1.949 of the August 11, 1995, Notice of Proposed Rulemaking, a more flexible policy on closing prosecution be adopted in a reexamination proceeding than is currently applied by the Office in its final action practice. Specifically, this proposed section indicates that prosecution will not normally close if there is a new ground of rejection (not previously addressed by the patent owner) which was not necessitated by an amendment to the claims by the patent owner. There was particular concern in the comments about a situation where new prior art is relied on even if it was necessitated by an amendment to the claims. It was noted that the proposed practice may serve a useful purpose in the normal examination of patent applications, where an applicant always has the opportunity to file a continuing application to make any further amendments to the claims that may be desirable to address the new ground of rejection; however, in a reexamination proceeding, where the patent owner is precluded from having any right to amend the claims to address the new ground of rejection or to file another request for reexamination, the patent owner may be trapped with no effective way to address new prior art that has been introduced for the first time in the Office action that simultaneously closes the prosecution. It was urged that this could be fundamentally unfair to the patent owner. Where new prior art is asserted by the examiner, the patent owner should have the opportunity to amend the claims.

Response to Issue 17

By weighing and balancing the interests of the parties, it is believed the rule as proposed is fair and reasonable. A rule which would prohibit an Office action from closing prosecution following a new art rejection responsive to a patent owner amendment would conceivably be subject to abuse, since patent owners could purposely add an amendment in each response to thus necessitate a new art rejection and thereby preclude the closing of prosecution for an unlimited number of cycles.

Issue 18

Eight comments were directed to interviews (provided for in § 1.955 of the August 11, 1995, Notice of Proposed Rulemaking). One comment suggested the need for a more accurate statement of why claims were found to be allowable as the result of an interview. A second comment suggested that the Office rules be modified to specifically require a means for more accurately recording what transpires at interviews, regardless of which party requests the interviews or whether all parties are present. The comment further stated that ''recording'' did not imply physical recording by electronic means or by a court reporter, but by a more thorough method of reporting by an examiner as to what transpired at the interview (which would be particularly effective with a multi-examiner review system). The comment indicated that the reporting of the ''minutes'' should be done to all parties, including a brief, non-binding, and informal opinion by the examiner on the resolution of the issues presented, so as to give all parties the opportunity to respond to the issues raised at the interview. A third comment suggested that the proposed rules should be modified to achieve two objectives. The first objective would be to provide an opportunity to better communicate issues to examiners (particularly those issues which are difficult to express on paper and might be better demonstrated; e.g., by charts, tables, or physical demonstration) of what is purported to be the main technical aspect of an invention, and how that technical aspect is or is not suggested by the prior art, either before or after the formal submission, so that they will have a better understanding of what the data represents. A second objective should be to provide a complete record for later review for a judge or an attorney who reviews the file history for a decision on patentability or infringement assessment. The proposed § 1.955 was stated to benefit the patent owner, who is the only party allowed to request an interview, thereby providing a tremendous advantage and, therefore, the rule should be modified to allow a third-party requester the opportunity to initiate an interview. The comment further criticized the lack of a specific requirement for recording what transpires at interviews, on the basis that an Examiner Interview Summary Record would be of little value in an *inter partes* reexamination proceeding, since the record is too abbreviated to be of any real value in subsequent proceedings and it is unlikely that much detail could be put into any interview record if more than one party, as well as a senior level official (whose presence would be required under the proposed rule) are all present and are relying upon an examiner to hurriedly write a summary of the interview. The comment suggested modification of § 1.955 to include an effective procedure for recording the details of what transpired at an interview. A fourth comment suggested that, in view of the criticality of the content of interviews in subsequent litigation, a mechanism should be made available for recording statements made at substantive interviews that occur during reexamination, whereby any party to a reexamination should be permitted to have a transcript of the substantive interviews made of record at their own expense. The comment further suggested that requesting parties would both supply the means for transcription and would bear the costs associated therewith. A fifth comment suggested that the third-party requester be allowed not only to participate but also initiate an interview, and that the third-party requester be provided, at a sufficient time prior to the interview, the particulars of the claim at issue at the

interview, the objective of the interview, and the specific data to be used at the interview, so that the third-party requester would be able to take substantial part in the discussion at the interview. A sixth comment was in favor of the third-party requesters having the right to participate in interviews but opposed giving third parties the right to initiate them. The reason given was that the rules need to balance the right to encourage third parties to participate with the need to keep reexamination quick and inexpensive. The comment further stated that in view of the expense, including the time required to review the transcript and the continuing attempts to make corrections and clarifications, a rule change to permit or require transcription of interviews is not recommended. Such a rule would make reexaminations more like court proceedings. A seventh comment suggested that § 1.955 should be changed to permit the third-party requester to request an interview because the third-party requester, like the patent owner, may have experts and/or documentary evidence that is not suitable for written declarations. An eighth comment suggested that if interviews are to be recorded, consideration should be given as to whether participants would be under oath.

Response to Issue 18

The Office has reconsidered its initial position (taken in the August 11, 1995, Notice of Proposed Rulemaking) to permit owner-initiated interviews in which the patent owner and the third-party requester participate. The presence of a third-party requester will complicate the reexamination proceeding and delay it. There is no reason to further complicate and delay the proceeding with *inter partes* interviews, which past history has shown to be not only resource intensive, but unwieldy. *Inter partes* interviews are difficult to arrange, control, and conduct. There would be interaction between the patent owner's representative and its experts, the third-party's representative and its experts, the examiner, and the ''senior level official'' which would be difficult to regulate and control. It is difficult to record what happened, and cross-transcripts would result in delay and complications. In addition, the time to arrange and conduct the interview would greatly extend the *inter partes* proceeding time line, and this is clearly contrary to the ''special dispatch'' required by 35 U.S.C. 314(c) for the *inter partes* reexamination proceeding. As to the comments suggesting that the third-party should be permitted to initiate interviews, this would even further complicate the proceeding, adding undue cost to the parties and the Office and further delay to the proceeding.

Accordingly, the Office has decided that the third-party requester of the *inter partes* reexamination should neither be permitted to initiate nor be permitted to participate in an interview which addresses the merits of the proceeding. If, however, the patent owner is permitted to initiate and participate in an interview which addresses the merits of the proceeding while the third-party requester is not, this will create an advantage to the patent owner which is contrary to the intent and purpose of the *inter partes* reexamination addition to the statute. Thus, to ''level the playing field'' in the Office, in accordance with the intent and purpose of the statute, the patent owner will neither be permitted to initiate nor be permitted to participate in an interview which addresses the merits of the proceeding. In other words, no interviews which address the merits of the proceeding will be permitted (or held) in an *inter partes* reexamination proceeding. This offers the additional advantage of further shortening the proceeding, pursuant to the dictates of ''special dispatch'' in 35 U.S.C. 314(c). Even further, this deals with the comments which argued that the content of the *inter partes* interview cannot be adequately captured without the use of expensive and complex transcripts. Anything stated or decided in the proceeding will be on the record, in writing.

As to the comments regarding improving the record of what transpired at interviews, clarity of the record is a concern to the Office. Accordingly, in § 1.560(b) (Interviews in *ex parte* reexamination proceedings), it is required for interviews in *ex parte* reexamination proceedings that ''[i]n every instance of an interview with an examiner, a complete written statement of the reasons presented at the interview as warranting favorable action must be filed by the patent owner.'' (Emphasis added). The written statement must be filed as a separate part of a response to an Office action outstanding at the time of the *ex parte* reexamination interview, or as a separate paper within one month from the date of the *ex parte* reexamination interview, whichever is later. Regarding *inter partes* reexamination proceedings, there will be no interviews at all which address the merits of the *inter partes* reexamination proceeding, as discussed in the previous paragraph, thus the comments regarding improving the record of what transpired at interviews are moot as to *inter partes* reexamination proceedings.

With respect to the suggestion of prior notice of what issues will be discussed (the specific objective of the interview and the materials to be presented), patent owners requesting interviews in *ex parte* reexamination proceedings are in fact expected to submit such materials prior to the interview with ample time for review. As to whether participants at recorded interviews (which are only permitted in special circumstances in *ex parte* reexamination proceedings) should be under oath, this is believed to be unnecessary in view of 18 U.S.C. 1001, which provides ''[w]hoever, in any matter within the jurisdiction of any department or agency of the United States knowingly and willfully falsifies, conceals or covers up by any trick, scheme, or device a material fact, or makes any false, fictitious or fraudulent statements or representations, or makes or uses any false writing or document knowing the same to contain any false, fictitious or fraudulent statement or entry, shall be fined not more than $10,000 or imprisoned not more than five years, or both.''

Issue 19

One comment stated that, as to § 1.959(a)(2) of the August 11, 1995, Notice of Proposed Rulemaking, the introduction of a right to appeal by a third-party requester who is dissatisfied with an examiner's favorable consideration of a claim is an important and beneficial aspect of the new reexamination proceedings. However, the apparent unqualified opportunity to file an appeal at this advanced stage in the proceedings raises a concern that the appeal procedure could be used to compromise the patent owner's ability to address the reasons and the evidence that the third-party requester might use in its appeal and to add (perhaps intentionally) considerable length to a proceeding that is to be conducted with special dispatch. The comment was concerned that the likelihood exists that the first time the patent owner will be made aware of the grounds of rejection to be relied upon by the third-party requester will be upon receiving the third-party's appeal brief, adding complexity and length to the proceeding. In spite of this, the provisions in § 1.967(b) relating to the respondent brief apparently do not contemplate any opportunity for the patent owner to offer an amendment or material appropriate to the new ground of rejection, as is permitted when an

examiner makes a new ground of rejection in the examiner's answer (see proposed § 1.971(b)). The comment suggested that consideration must be given to setting appropriate limits on the grounds of rejection that the third-party requester can rely upon in its appeal; including consideration to requiring the third party requester who files a notice of appeal under proposed § 1.959(a)(2) to identify in this notice the grounds of rejection that it will rely upon in its appeal.

Response to Issue 19

Third-party requester's prior art submissions in an *inter partes* reexamination (after reexamination is ordered) are limited by the currently proposed § 1.948 to prior art: (1) Which is necessary to rebut a finding of fact by the examiner; (2) which is necessary to rebut a response of the patent owner; or (3) which became known or available to the third-party requester after the filing of the *inter partes* reexamination proceeding. Under § 1.947 (Response by third-party requester to patent owner's response), the third-party requester's comments shall be limited to issues raised by the action of the Office or the patent owner's response. Accordingly, the third-party requester could not advance a new ground of rejection based upon new prior art at the appeal stage. Although the notice of appeal does not require specific identification of the issues, the appellant's brief does. See currently proposed §§ 1.965(c)(6) (appellant brief), 1.967(b)(6) (respondent brief) and 1.971 (rebuttal brief), all of which specifically prohibit the third-party from introducing new grounds of rejection at each respective stage of the appeal.

Issue 20

One comment submitted in response to the August 11, 1995, Notice of Proposed Rulemaking suggested that the enforcement role of the Office should be such that the examiner is obligated to issue an examiner's answer in every reexamination proceeding. The comment noted that present (1995) rules provide that an examiner may issue an examiner's answer. It was urged that when the Office decides that an invention is unpatentable, it is incumbent that the Office not rely upon the third-party requester exclusively, and therefore, examiner's answers should be mandatory.

Response to Issue 20

Although the currently proposed § 1.969(a) (and § 1.193(a)(1)) indicates that an examiner's answer may be furnished, common practice is to furnish an examiner's answer. This practice is implemented through procedures set forth in the MPEP. Moreover, the examiner cannot be obligated to issue an examiner's answer in every instance, since, in rare instances, it will become necessary to reopen prosecution for consideration of a recently discovered new ground of rejection or reason for patentability.

Issue 21

One comment responding to the August 11, 1995, Notice of Proposed Rulemaking suggested that appellant should be given the opportunity to reply to both the opening brief of the respondent and the examiner's answer, either by filing briefs in response to each, or by a single reply brief after the examiner's answer.

Response to Issue 21

The second option of the comment has been adopted. The currently proposed § 1.971 (Rebuttal Brief) provides that, following the examiner's answer, any appellant may once submit a rebuttal brief. The rebuttal brief of the patent owner may be directed to the examiner's answer and/or any respondent brief. The rebuttal brief of any third-party requester may be directed to the examiner's answer and/or the respondent brief of the patent owner. The rebuttal brief of a third-party requester may not be directed to the respondent brief of any other third-party requester. No new ground of rejection can be proposed by a third-party requester appellant.

Issue 22

One comment responsive to the August 11, 1995, Notice of Proposed Rulemaking suggested that because both the request for oral argument and the briefs replying to the examiner's answer are due within one month, the parties will likely not be able to consider each other's final written submissions before requesting oral argument and, therefore, the period for requesting an oral hearing be lengthened to 45 days, thus giving the parties 15 days to consider each other's final written submissions.

Response to Issue 22

This comment has been adopted as follows. Section 1.973(b) (Oral Hearing) as proposed provides that the parties have two months after the date of the examiner's answer to file a written request for oral hearing.

Issue 23

One comment suggested that proposed § 1.979(b) of the August 11, 1995, Notice of Proposed Rulemaking provides an opportunity for each party to file a single request for rehearing (referred to as ''request for reconsideration'' in the comment) of the decision of the Board of Patent Appeals and Interferences. However, there is no apparent opportunity for the other party to provide comments on that request. The lack of this opportunity is not consistent with the general approach in the new reexamination process of providing an opportunity for both parties to provide comments before any action is taken by the Office, and it was suggested once a request for rehearing has been filed by either or both parties, that the other party have a one-month period to offer comments on the request for rehearing.

Response to Issue 23

This comment has been adopted. The third-party requester, by virtue of the statute, has no opportunity to appeal the decision of the Board of Patent Appeals and Interferences to the U.S. Court of Appeals for the Federal Circuit. In addition, § 1.979(d), as presently proposed, permits the party requesting rehearing (in addition to stating ''the points believed to have been misapprehended or overlooked in rendering the decision'') to also state ''all other grounds upon which rehearing is sought.'' It is only fair to give the third-party requester an opportunity to comment on newly provided ''other grounds upon which rehearing is sought.'' The patent owner should likewise be given the same opportunity to comment in order to create a level ''playing field'' in the Office. Accordingly, currently proposed § 1.979(b) has been drafted to give both the patent owner and the third-party requester a right to comment on each other's request for rehearing of the decision of the Board of Patent Appeals and Interferences.

Issue 24

One comment suggested that § 1.985 of the August 11, 1995, Notice of Proposed Rulemaking, which permits any person to advise the Office about a concurrent proceeding involving the patent being reexamined, should be changed to require the patent owner to advise the Office (and therefore any third-party requester) of any concurrent proceeding involving the patent being reexamined. The comment also stated that similar mandatory requirements are contained in § 1.660 relating to the conduct of an interference proceeding involving an application or a patent.

Response to Issue 24

The suggestion has been adopted. Currently proposed § 1.985(a) (Notification of prior or concurrent proceedings) is drafted to direct that in any *inter partes* reexamination proceeding, the patent owner shall call the attention of the Office to any prior or concurrent proceedings in which the patent is or was involved such as interferences, reissue, reexaminations, or litigation and the results of such proceeding.

Issue 25

Regarding § 1.989 of the August 11, 1995, Notice of Proposed Rulemaking, one comment stated that the merger of multiple reexamination proceedings on unrelated issues by unrelated parties will result in undue complications of the proceedings, particularly during interviews and hearings.

Response to Issue 25

As pointed out above in the response to Comment 18, the Office has reconsidered its initial position (taken in the August 11, 1995, Notice of Proposed Rulemaking) and will not permit any interview which addresses the merits in an *inter partes* reexamination proceeding. Thus, the comment is moot as to complications caused by an *inter partes* interview. Although multiple parties can, to some degree, increase the complexity of the proceeding even in areas other than the interviews focused upon by the commenter, the general policy of the Office is that concurrent reexamination proceedings will not be conducted separately at the same time on the same patent. The reasons for this policy is to prevent inconsistent, and possibly conflicting, amendments from being introduced into the two proceedings on behalf of the patent owner. Normally the proceedings will be merged whenever it is desirable to do so in the interest of expediting the prosecution of all proceedings.

Issue 26

One comment responding to the August 11, 1995, Notice of Proposed Rulemaking suggested that it would be beneficial for the rules to provide specific procedures for consolidating multiple reexamination requests of the same patent, since the procedure is too complicated for the public to simply rely upon internal Office policy.

Response to Issue 26

Section 1.989, as proposed in the present rule package, provides for the merging of multiple reexaminations. As to the details of the merger procedure, it is believed to be more appropriate to incorporate same in the MPEP, because it is less cumbersome and easier to revise the details via the MPEP as needed to react to input as the practice evolves, than it would be to revise the rules. Further, where it becomes known that an area of the merger procedure is not being understood by the public, it will be easier to add more explanation to the MPEP, than to make the rules more comprehensive. Accordingly, the MPEP will contain the detailed discussion of the merger procedure.

Issue 27

One comment stated that as to § 1.991 of the August 11, 1995, Notice of Proposed Rulemaking, a merged reissue/reexamination proceeding will be conducted according to provisions applicable to the reissue application except that the participation by a third-party requester shall be limited to issues within the scope of reexamination. Since a third-party requester has a right to inspect a reissue application and file a protest involving any issue considered in a reissue application, consideration should be given to permitting participation by a third-party requester in the full scope of issues addressed under the reissue statute. It was urged that the right of appeal and participation in the appeal process by the third-party requester should be limited to the scope permitted under the reexamination statute. The comment further questioned how the third-party requester will be notified of its right to appeal within the scope of the reexamination proceeding, since typically there would be no separate action closing prosecution and right to appeal in a reissue proceeding.

Response to Issue 27

When an *inter partes* reexamination proceeding is merged with a reissue application, the participation by the third-party requester shall be limited to issues within the scope of the *inter partes* reexamination. This is consistent with the recommendations of *The Advisory Commission on Patent Law Reform: A Report to the Secretary of Commerce, August 1992* at page 117, ''that a full *inter partes* proceeding, even with certain restrictions, would lead to abuses of the process much as occurred in the reissue protests under the Dann amendments * * * [and] the USPTO is not an appropriate forum for an *inter partes* adversarial proceeding addressing all potential issues of validity.'' [Emphasis added]

As to how the third-party requester will be notified (in the merged proceeding) of its right to appeal within the scope of the reexamination proceeding, since there is no provision in the reissue rules for a separate action closing prosecution and right to appeal, currently proposed § 1.995 provides that when a third-party requester is involved in one or more proceedings including an *inter partes* reexamination proceeding, the merger of such proceedings will be accomplished so as to preserve a third-party requester's right to participate to the extent specifically provided for in these regulations. Due to the complexity of the merged reissue/reexamination proceedings and the varying issues presented as a result of the merger, the decision merging the reissue and reexamination proceedings will set forth the framework for various courses of action by the parties, including appeal notification and rights.

Issue 28

One comment asked what relationship will there be between the § 1.993 request to stay an interference (of the August 11, 1995, Notice of Proposed Rulemaking) and the § 1.644(a) petition in interference, since the § 1.993 ''request to stay an interference'' is really a form of a petition and should be covered or cross-referenced in § 1.644(a).

Response to Issue 28

The request to stay an interference under § 1.993 as currently proposed, and under present § 1.565(e) is not an exact fit under any of subsections (1)-(3) of § 1.644(a); thus, it provides an additional aspect of relief to the public. While subsection (2) of § 1.644(a) might appear to overlap the § 1.565(e) and § 1.993 request to stay an interference, § 1.644(b) states that ''[a] petition under paragraph (a)(2) of this section shall not be filed prior to the party's brief for final hearing (see § 1.656).'' Just as petitions under § 1.644 are decided by the Chief Administrative Patent Judge of the Board of Patent Appeals and Interferences, a request to stay an interference under § 1.565(e) and § 1.993 will likewise be decided by the Chief Administrative Patent Judge of the Board of Patent Appeals and Interferences. The decision of *Shaked* v. *Taniguchi*, 21 USPQ2d 1289 (Comm'r Pat. 1991) should be noted, where it was pointed out that neither the reexamination nor the interference will ordinarily be stayed in this situation.

Discussion of the Major Specific Issues Involved (1999 Statute)

The proposed rules relating to *inter partes* reexamination proceedings are directed to the provisions set forth in Chapter 31 of Title 35 of the United

States Code (35 U.S.C. 311–318). This Chapter provides for the filing of requests for *inter partes* reexamination, decisions on such requests, *inter partes* reexamination, appeal from *inter partes* reexamination decisions, and the issuance of a certificate at the termination of the *inter partes* reexamination proceedings.

Discussion of Specific Rules

Section 1.4 is proposed to be amended so that paragraph (a)(2) includes the *inter partes* reexamination under §§ 1.902—1.997.

Section 1.6 is proposed to be amended so that paragraph (d)(5) includes filing a request for *inter partes* reexamination under § 1.913 as an exception to the use of facsimile transmission.

Section 1.17 is proposed to be amended so that the title includes a reference to reexamination to clearly indicate that the enumerated fees may apply to reexaminations as well as to patent applications. Section 1.17 is proposed to be amended so that paragraph (l) reflects the fact that in the case of reexaminations, petitions for revival of a reexamination proceeding terminated for an unavoidable failure of the patent owner to respond will require the fees of $55 for a small entity and $110 for a large entity. Also, § 1.17 is proposed to be amended so that paragraph (m) reflects the fact that in the case of reexaminations, petitions for revival of a reexamination proceeding terminated for an unintentional failure to respond will require the fees of $605 for a small entity and $1,210 for a large entity. Note, however, that the unintentional revival provisions of the statute are not effective in any reexamination until November 29, 2000.

Section 1.20 is proposed to be amended so that paragraph (c) reflects the fact that a request for an *ex parte* reexamination under § 1.510(a) will require a filing fee of $2,520; and that a request for an *inter partes* reexamination under § 1.915(a) will require a filing fee of $8,800.

Section 1.25, which provides for charging fees to deposit accounts, is proposed to be amended so that paragraph (b) includes a reference to *inter partes* reexaminations under § 1.913.

Section 1.26 is proposed to be amended so as to reflect the refund to the reexamination requester where the Director decides not to institute a reexamination proceeding. For *ex parte* reexaminations filed under § 1.510, a refund of $1,690 will be made to the reexamination requester. For *inter partes* reexaminations filed under § 1.913, a refund of $7,970 will be made to the reexamination requester. In both cases $830 of the filing fee will be retained, which amount reflects the cost of the reexamination proceeding through the denial of the reexamination request.

Section 1.112 is proposed to be amended so that the last sentence reflects the fact that in the case of *inter partes* reexaminations, the right to reply may be limited by an action closing prosecution under § 1.949 (prior to the final action) or by a right of appeal notice under § 1.953 (which is a final action).

Section 1.113, which provides for a final rejection or action, is proposed to be amended to limit its applicability to applications and *ex parte* reexaminations filed under § 1.510. For final rejections or actions in an *inter partes* reexamination filed under § 1.913, new § 1.953 will control.

Section 1.116 is proposed to be amended so that the title includes a reference to an action closing prosecution and a right of appeal notice in *inter partes* reexaminations. Paragraph (a), which provides for amendments after final action, is proposed to be amended to apply to amendments after an action closing prosecution by patent owners in *inter partes* reexaminations filed under § 1.913. Also § 1.116(a) is proposed to be amended to preclude amendments after the right of appeal notice under § 1.953 except as provided for in § 1.116(c). Paragraph (c), which provides for amendments after the decision on appeal, is proposed to be amended to provide for amendments after the decision on appeal in an *inter partes* reexamination.

Section 1.121(c), which provides for the manner of making amendments to the description and claims in reexamination proceedings, is proposed to be amended to specify that such amendments are made in accordance with § 1.530(d) in both *ex parte* reexaminations filed under § 1.510 and *inter partes* reexaminations filed under § 1.913.

Parts (a)(2) and (b) of § 1.136, which provide for filing of timely replies with petitions for extensions of time, are proposed to be amended to make it clear that § 1.956 is controlling for extensions of time in *inter partes* reexaminations.

Section 1.137, which provides for revival of abandoned applications or lapsed patents, is proposed to be amended to provide for revival of *ex parte* reexamination proceedings terminated under § 1.550(d), for revival of *inter partes* reexamination proceedings terminated under § 1.957(b), or for revival of rejected claims terminated under § 1.957(c) in an *inter partes* reexamination proceeding where further prosecution has been limited to claims found allowable at the time of the failure to respond. The title is being amended to include a terminated reexamination proceeding. Paragraph (a) is being amended to include revival of unavoidably terminated reexamination proceedings. The unavoidable delay provisions of 35 U.S.C. 133 are imported into and are applicable to reexamination proceedings by 35 U.S.C. 305 and 314. See *In re Katrapat*, 6 USPQ2d 1863 (Comm'r Pats. 1988). Paragraph (b) is being amended to provide for revival of unintentionally terminated reexamination proceedings. The unintentional delay fee provisions of 35 U.S.C. 41(a)(7) are imported into and are applicable to all reexamination proceedings by section 4605 of S. 1948. Note that these changes pertain to *all* reexaminations (i.e., both *ex parte* reexaminations filed under § 1.510 and *inter partes* reexaminations filed under § 1.913) and become effective on November 29, 2000 (one year after enactment of statute). Paragraph (d) is being amended to provide that extensions of time for requesting reconsideration of a decision dismissing or denying a petition requesting revival of a terminated reexamination proceeding under subsections (a) or (b) must be filed under § 1.550(c) for a terminated *ex parte* reexamination proceeding, or under § 1.956 for a terminated *inter partes* reexamination proceeding.

Section 1.181, is proposed to be amended so that paragraphs (a) and (c) reflect the fact that such a petition may be filed in a reexamination proceeding.

Section 1.191, which provides for appeal to the Board of Patent Appeals and Interferences by the patent owner from any decision adverse to patentability, is proposed to be amended so as to be applicable to applications and *ex parte* reexaminations filed under § 1.510, but not to *inter partes* reexamination proceedings filed under § 1.913. Specifically, proposed § 1.191 would point out that appeals to the Board of Patent Appeals and Interferences in *inter partes* reexamination proceedings filed under § 1.913 are controlled by §§ 1.959 through 1.981, and that §§ 1.191 through 1.198 are not applicable to appeals in *inter partes* reexamination proceedings filed under § 1.913.

Section 1.191 is further proposed to be amended to distinguish between *ex parte* reexamination proceedings filed under § 1.510 for patents that issued

from an original application filed in the United States prior to November 29, 1999 (where an appeal is permitted when claims have been twice or finally rejected), and *ex parte* reexamination proceedings filed for patents that issued from an original application filed in the United States on or after November 29, 1999 (where an appeal is only possible when claims have been finally rejected). This date distinction is necessitated by the conforming amendments to 35 U.S.C. 134 in S. 1948 and the effective date of the changes to the statute which are keyed to the original filing date of the application which issued as the patent under reexamination. The effective date language in section 4608 of S. 1948 limits the applicability of the new *inter partes* reexamination Chapter 31, and the conforming amendments to 35 U.S.C. 134, 141, 143 and 145, to a reexamination of any patent that issues from an original application which is filed in the United States on or after November 29, 1999. Thus, for *ex parte* reexaminations filed under Chapter 30, the conforming amendments to 35 U.S.C. 134, 141, 143 and 145 only apply to those *ex parte* reexamination proceedings filed under § 1.510 for patents that issue from an original application which is filed in the United States on or after November 29, 1999. The conforming amendments will not apply to *ex parte* reexamination proceedings filed under § 1.510 for patents that have issued or will issue from an original application which was filed in the United States prior to November 29, 1999.

Section 1.301, which provides for appeal by the patent owner in a reexamination proceeding to the U.S. Court of Appeals for the Federal Circuit, is proposed to be amended so as to be applicable to *ex parte* reexamination proceedings filed under § 1.510 and to indicate, for *inter partes* reexamination proceedings filed under § 1.913, that § 1.983 is controlling.

Parts (a) and (b) of section 1.303, which provide for remedy by civil action under 35 U.S.C. 145 for the patent owner in a reexamination proceeding, are proposed to be amended so as to be applicable in reexamination only to *ex parte* reexaminations filed under § 1.510 for patents that issue from an original application which is filed in the United States prior to November 29, 1999. This date distinction is necessitated by the conforming amendments to 35 U.S.C. 141 and the effective date of the statute which is keyed to the original filing date of the application which issues as the patent under reexamination. See sections 4605 and 4608 of S. 1948. The effective date language limits the applicability of the new *inter partes* reexamination Chapter 31, and the conforming amendments to 35 U.S.C. 141, to any patent that issues from an original application which is filed in the United States on or after November 29, 1999. Thus, for *ex parte* reexaminations filed under Chapter 30, the conforming amendments to 35 U.S.C. 141, which limit the patent owner to an appeal only to the U.S. Court of Appeals for the Federal Circuit, only apply to those *ex parte* reexamination proceedings filed under § 1.510 for patents that issue from an original application which is filed in the United States on or after November 29, 1999. The conforming amendments in section 4605 of S. 1948 will not apply to *ex parte* reexamination proceedings filed under § 1.510 for patents that issue from an original application which is filed in the United States prior to November 29, 1999. It is further proposed to amend § 1.303 by adding a new subsection (d) to clearly note that no remedy by civil action under 35 U.S.C. 145 is available to the patent owner for *ex parte* reexamination proceedings filed under § 1.510 for patents that issue from an original application which is filed in the United States on or after November 29, 1999, and for any *inter partes* reexamination proceedings filed under § 1.913.

Section 1.304, which provides for the time for appeal by the patent owner in a reexamination proceeding to the U.S. Court of Appeals for the Federal Circuit, is proposed to be amended so as to be applicable to *inter partes* reexamination proceedings filed under § 1.913.

The section heading (title) to Subpart D is proposed to be amended by inserting ''*Ex Parte*'' before Reexamination to provide that the reexamination rules in this part generally apply to *ex parte* reexamination proceedings. Since some of the rules also apply to *inter partes* reexamination, they are specifically incorporated into the *inter partes* reexamination rules, *e.g.,* § 1.933 (patent owner duty of disclosure) incorporates § 1.555; and § 1.943 (manner of making amendments) incorporates § 1.530(d)(5). Unless specifically stated otherwise, in this subpart the term ''reply'' shall also mean ''response.''

The titles of §§ 1.501–1.570 and the undesignated center headings for Subpart D are proposed to be amended by revising them to be limited to *ex parte* reexamination except as specifically stated otherwise (*e.g.,* §§ 1.530, 1.555 and 1.565).

Proposed section 1.501, which provides for citations of prior art in patent files, sets forth the procedure that citations shall be entered in the patent file unless a reexamination proceeding is pending and reexamination has been ordered. In this situation, only citations by the patent owner under § 1.555 and by a third-party requester under either § 1.510 or § 1.535 will be entered during the pendency of the reexamination proceeding. Citations by other parties filed during the pendency of the reexamination proceeding will not be entered into the patent file or the reexamination file until the reexamination proceeding is concluded. The section is further amended to indicate that processing of prior art citations in patent files during an *inter partes* reexamination proceeding filed under § 1.913 is controlled by § 1.902.

Section 1.510, which relates to the contents of the reexamination request, is proposed to be amended to limit the section to *ex parte* reexamination proceedings. In addition, § 1.510(b)(4) is proposed to be amended to delete the requirement of mounting the copy of the patent to be reexamined in single column format. Instead, a copy of the entire patent including the front face, drawings, and specification/claims (in double column format) for which reexamination is requested, and a copy of any disclaimer, certificate of correction, or reexamination certificate issued in the patent will be required. All copies must have each page plainly written on only one side of a sheet of paper.

It is proposed to amend §§ 1.515, 1.520, 1.525, 1.530, 1.535, and 1.540 to recite the reexamination as ''*ex parte*'' reexamination where appropriate, to eliminate any potential for confusion. Further, § 1.530(d) is proposed to be revised so that it applies to both *ex parte* reexamination and *inter partes* reexamination proceedings.

Section 1.550, which provides for the conduct of the reexamination proceeding, is proposed to be amended to limit the section to *ex parte* reexamination proceedings filed under § 1.510. In addition, § 1.550(d) is proposed to be amended to clarify that the failure to file a written statement of an interview required under § 1.560(b) shall be the basis for terminating a reexamination proceeding. Proposed § 1.550(e)(1) specifically provides for the revival of terminated *ex parte* reexamination proceedings under the unavoidable delay provisions of § 1.137(a). The unavoidable delay provisions of 35 U.S.C. 133 are imported into and are applicable to *ex parte* reexamination proceedings by 35 U.S.C. 305. Proposed § 1.550(e)(2) provides for the revival of terminated *ex parte* reexamination proceedings under the

unintentional provisions of § 1.137(b). The unintentional delay fee provisions of 35 U.S.C. 41(a)(7) are imported into and are applicable to *ex parte* and *inter partes* reexamination proceedings by section 4605 of S. 1948. Note, however, the unintentional delay fee provisions of 35 U.S.C. 41(a)(7) only become effective in reexamination proceedings on November 29, 2000 (one year after enactment of statute).

Section 1.560, which provides for interviews in reexamination proceedings, is proposed to be amended to limit the section to *ex parte* reexamination proceedings filed under § 1.510. Note, however, that there will be no interviews which address the issues of the proceeding permitted in *inter partes* reexamination proceedings under § 1.913. See § 1.955.

In addition, § 1.560(b) is proposed to be amended to clarify that the patent owner must file a written statement of an interview after an interview is held. The written statement may be filed either as a separate paper or as a separate part of a response to an outstanding Office action, whichever is later.

Section 1.565, which provides for concurrent Office proceedings, is proposed to be amended to limit the section to *ex parte* reexamination proceedings filed under § 1.510. In addition, § 1.565(e) is proposed to be amended to change ''examiner-in-chief'' to ''administrative patent judge'' to reflect their current title. Also, the appropriate references for concurrent *ex parte* and *inter partes* reexamination situations have been added. Section 1.565(c) is proposed to be amended to make it clear that after prosecution has been terminated in a pending reexamination proceeding (e.g., by the issuance of a Notice of Intent to Issue a Reexamination Certificate) there is no right of merger of any subsequently filed reexamination request.

It is proposed to amend § 1.570 to recite the reexamination as ''*ex parte*'' reexamination where appropriate, to eliminate any potential for confusion.

In the current rules, or portions of the rules, that are amended in this package, ''Commissioner,'' has been revised to read ''Director'' in accordance with section 4732 of S. 1948. As to the rules, or portion of the rules, not being revised in this package, it is anticipated that the technical correction of ''Commissioner'' to ''Director'' will be effected in a future rule package directed to technical corrections that will be issued in due course.

The proposed title to Subpart H provides that the reexamination rules in this part generally apply to *inter partes* reexamination proceedings. Some of the *inter partes* reexamination rules specifically incorporate *ex parte* reexamination rules, e.g., § 1.943 (manner of making amendments) incorporates § 1.530(d)(5), and § 1.933 (patent owner duty of disclosure) incorporates § 1.555. Unless specifically stated otherwise, in this subpart the term ''reply'' shall also mean ''response.''

Proposed § 1.902 provides for the processing of prior art citations during an *inter partes* reexamination proceeding and is consistent with the provisions of § 1.501 which deals with prior art citations in patent files and in *ex parte* reexamination proceedings.

Proposed § 1.903 provides that the patent owner and the third-party requester shall be sent copies of all Office actions, and that the patent owner and the third-party requester must serve copies of all papers on all other parties in the *inter partes* reexamination proceeding or they may be refused consideration by the Office. This is analogous to the provisions of § 1.550(e).

Proposed § 1.904 provides that the notices of filing of *inter partes* reexamination requests will be published in the *Official Gazette* under § 1.11(c) and that such a notice will be considered to be constructive notice to the patent owner.

Proposed § 1.905 provides that, unless otherwise provided for, submission of papers by the public other than third-party requesters in an *inter partes* reexamination proceeding will not be considered in the proceeding and will be treated in accordance with the requirements of a prior art submission under § 1.902. Submissions not in accordance with § 1.902 will be returned to the sender.

Proposed § 1.906 covers the scope of reexamination in an *inter partes* reexamination proceeding. While it is not intended that the examiners will routinely complete a new search when conducting an *inter partes* reexamination, the examiners may conduct additional searches and cite and apply additional prior patents and printed publications when they consider it appropriate and beneficial to do so. Paragraph (a) provides that the examination is only on the basis of patents or printed publications and on the basis of the requirements of 35 U.S.C. 112 with respect to subject matter added or deleted during the *inter partes* reexamination. Paragraph (b) provides that claims in a reexamination proceeding must not enlarge the scope of the claims of the patent and must not introduce new matter. Paragraph (c) provides that issues relating to matters other than those indicated in paragraphs (a) and (b) of this section (e.g., on sale, public use, duty of disclosure, etc.) will not be resolved in a reexamination proceeding, but will be noted by the examiner as being an open issue in the record. The examiner should only raise an issue under § 1.906(c) with caution after careful consideration, and should only raise the issue once. Patent owners could then file a reissue application if they wish such issues to be resolved.

Proposed § 1.907 sets forth prohibitions on the filing of an *inter partes* reexamination request. The basis for this section is 35 U.S.C. 317. Under § 1.907(a), once an order for *inter partes* reexamination has been issued, neither the third-party requester, nor any of its privies, may file a subsequent request for an *inter partes* reexamination of the patent until an *inter partes* reexamination certificate is issued, unless authorized by the Director. Under subsection (b) once a final decision has been entered against a party in a civil action that the party has not sustained its burden of proving invalidity of any patent claim in suit, then that party, and its privies, are thereafter precluded from requesting an *inter partes* reexamination of any such patent claim on the basis of issues which that party, or its privies, raised or could have raised in such civil action, and an *inter partes* reexamination requested by that party, or its privies, on the basis of such issues may not thereafter be maintained by the Office. Under subsection (c) if a final decision in an *inter partes* reexamination proceeding instituted by a third-party requester is favorable to patentability of any patent claim, then that party, or its privies, may not thereafter request *inter partes* reexamination of any such patent claim on the basis of issues which that party, or its privies, raised or could have raised in such *inter partes* reexamination proceeding.

Proposed § 1.913 provides for any third-party requester (except if the estoppel provisions of § 1.907 apply) to file a request under 35 U.S.C. 311 for an *inter partes* reexamination of a patent which issued from an original application filed in the United States on or after November 29, 1999. The time period for filing such a request is limited to the period of enforceability of the patent for which the request is filed.

Proposed § 1.915(a) requires payment of the fee for requesting an *inter partes* reexamination which is set forth in § 1.20(c)(2). Paragraph (b) of § 1.915 indicates what each request for *inter partes* reexamination must include. The requirements are analogous to the

requirements of § 1.510(b) for filing an *ex parte* reexamination request with the most notable difference being that the third-party requester must be identified in an *inter partes* reexamination request. Paragraph (c) indicates that requests for an *inter partes* reexamination may be filed by attorneys or agents on behalf of a third-party requester, but it is noted that the real party in interest must be identified. Paragraph (d) provides that if the request for *inter partes* reexamination does not meet all the requirements of paragraph (b), the third-party requester may be given an opportunity to complete the *inter partes* reexamination request to avoid having the proceeding vacated.

Proposed § 1.919 indicates that the date on which the entire fee for a request for *inter partes* reexamination is received will be considered to be the filing date of the request for *inter partes* reexamination.

Proposed § 1.923 provides for a determination by the examiner as to whether the request has presented a substantial new question of patentability under 35 U.S.C. 312 and requires that the determination be made within 3 months of the filing date of the request.

Proposed § 1.925 provides for a refund under § 1.26(c) of a portion of the filing fee if *inter partes* reexamination is not ordered. See the discussion of § 1.26(c) above as to the amount of the refund.

Proposed § 1.927 provides for review by petition to the Director of a decision refusing *inter partes* reexamination.

Proposed § 1.931 provides for ordering *inter partes* reexamination where a substantial new question of patentability has been found pursuant to § 1.923. Under paragraph (b), the only limitation placed on the selection of the examiner by the Office is that the same examiner whose decision refusing *inter partes* reexamination was reversed on petition filed under § 1.927 ordinarily will not conduct the *inter partes* reexamination ordered in the decision granting the petition.

Proposed § 1.933 covers the duty of disclosure by a patent owner in an *inter partes* reexamination proceeding. The rule provides that the duty in an *inter partes* reexamination proceeding is the same as the patent owner's duty in an *ex parte* reexamination proceeding as set forth in § 1.555 (a) and (b), and is satisfied by filing a paper in compliance with § 1.555 (a) and (b).

Proposed § 1.935 indicates that the initial Office action on the merits usually accompanies the *inter partes* reexamination order as expressly provided for as an option in 35 U.S.C. 313. It is contemplated that the initial paper from the examiner will comprise two parts. The first part will address the issue as to whether the prior art raises a substantial new question of patentability (SNQ). If the examiner determines that the prior art does not raise an SNQ, reexamination is denied. No patentability question would be addressed by the examiner. If the examiner determines that the prior art does raise an SNQ, reexamination will be ordered. In this situation, a second part of the initial Office action will usually be issued which would address the patentability issues and will constitute the first Office action on the merits.

Proposed § 1.937 would cover the basic items relating to the conduct of *inter partes* reexamination proceedings. Paragraph (a) provides that, in accordance with 35 U.S.C. 314(c), unless otherwise provided by the Director for good cause, all *inter partes* reexamination proceedings will be conducted with special dispatch. Paragraph (b) provides that all *inter partes* reexamination proceedings will be conducted according to the procedures established for initial examination under §§ 1.104–1.116. These proceedings will basically follow the procedures for examining patent applications. Paragraph (c) provides that all communications between the Office and the parties to the *inter partes* reexamination which are directed to the merits of the proceeding must be in writing and filed with the Office for entry into the record of the proceeding.

Proposed § 1.939 provides for the return of unauthorized papers filed by any party in an *inter partes* reexamination, and that unless otherwise authorized, no paper shall be filed in an *inter partes* reexamination before the initial Office action on the merits.

Proposed § 1.941 provides that amendments made by the patent owner in an *inter partes* reexamination must be made in accordance with the requirements of §§ 1.530(d) and 1.943.

Proposed § 1.943, paragraph (a) provides that the form of responses, briefs, appendices, and other papers must be in accordance with § 1.530(d)(5). Paragraph (b) provides for page limits for responses by the patent owner and written comments by the third-party requester (other than briefs). Amendments, appendices of claims, and reference materials such as prior art references would not be included in this total. Paragraph (c) provides for page limits or total word limits for briefs.

Proposed § 1.945 provides that a patent owner will be given at least thirty days to respond to any Office action on the merits. Although problems may arise in certain cases and extensions of time may be granted under § 1.956, it is felt that relatively short response times are necessary in order to process reexaminations with ''special dispatch.'' While the Office intends to set a two-month period for patent owner to respond to an Office action on the merits in usual situations, the minimum period will always be at least 30 days.

Proposed § 1.947 provides that each time a patent owner files a response to any Office action on the merits, the third-party requester may once file written comments within a period of 30 days from the date of service of the patent owner's response. Since 35 U.S.C. 314(b)(3) statutorily imposes this period for third-party requester comments, this time may not be extended. Thus, any third-party comments, including any supplemental comments, filed after expiration of 30 days from the date of service of the patent owner's response shall be considered to be untimely filed and unauthorized, and shall be returned to the third-party in accordance with § 1.939.

Proposed § 1.948 provides that additional third-party requester prior art submissions as defined under § 1.501 may be filed after the *inter partes* reexamination order only if they are submitted as part of a comments submission under § 1.947 (written comments to a patent owner response to an Office action on the merits) and limited to: (1) Any prior art which is necessary to rebut a finding of fact by the examiner; (2) any prior art which is necessary to rebut a response of the patent owner; or (3) any prior art which became known or available to the third-party requester after the filing of the *inter partes* request for reexamination where a discussion of the pertinency of each reference to the patentability of at least one claim is included. The purpose of this rule is twofold. First, the third-party requester may cite any prior art needed to rebut a position taken by the examiner or the patent owner. Second, the third-party requester may submit prior art newly discovered or newly available since the filing of the *inter partes* reexamination request provided a discussion of the pertinency of each reference to the patentability of at least one claim is included. The only limitation is that the prior art may only be submitted along with written comments filed by the third-party requester under § 1.947 in response to a patent owner response to an Office action on the merits. Limiting prior art submissions to newly discovered or

newly available prior art (except when used for rebuttal purposes) will encourage the third-party requester to submit all known pertinent prior art along with the initial request for *inter partes* reexamination. Later submission of previously known or available prior art would only be permissible to rebut a position taken by the examiner or the patent owner, or through the filing of an *ex parte* reexamination request (which, if ordered, would be merged with the *inter partes* reexamination proceeding). Permitting the third-party requester to timely submit newly discovered or previously unavailable prior art, however, will obviate the need for the third-party requester to have to file *an ex parte* request for reexamination. To prevent harassment of the patent owner due to frequent submissions of prior art citations during a reexamination proceeding, such submissions may only be filed along with written comments filed by the third-party requester in response to a patent owner response to an Office action on the merits or after an action closing prosecution.

Proposed § 1.949 provides for the close of prosecution on the second or subsequent Office action, as opposed to a final rejection or a final action which would be issued in an *ex parte* reexamination proceeding. The distinction between a final action (including a final rejection) and an action closing prosecution is important as appeal rights to the Board of Patent Appeals and Interferences under 35 U.S.C. 134 (b) and (c) mature only with a final action (as opposed to ''twice rejected'' in an application under 35 U.S.C. 134(a)). The statute permits the patent owner to appeal finally rejected claims, and the third-party requester to appeal final decisions favorable to patentability to the Board of Patent Appeals and Interferences. The rules were drafted to provide for both the patent owner and the third-party requester to submit comments on the examiner's patentability findings prior to making such findings final. The action closing prosecution (in *lieu* of a final action) is needed to preclude one party from filing a notice of appeal while another party is filing comments seeking reconsideration of an examiner's decision. It is only after the examiner has considered all the comments submitted by all the parties that a final rejection and final decision favorable to patentability will be issued by way of the Right of Appeal Notice under § 1.953. At that time, both the patent owner and the third-party requester may appeal to the Board of Patent Appeals and Interferences.

Proposed § 1.951 provides the options available to the parties after an Office action closing prosecution. Both the patent owner and the third-party requester may once file a response limited to issues raised in the action closing prosecution. The patent owner may also submit proposed amendments (subject to the criteria of § 1.116 as to whether or not the amendments shall be admitted). If one party files a response, the other party may once file written comments on the other's response. The time periods within which the patent owner and the third-party requester may act (as provided for by this section) may run concurrently. In this manner all parties are provided an equal opportunity to contest the examiner's patentability findings before the findings are made final and ripe for appeal.

Proposed § 1.953(a) provides that, following the responses or expiration of the time for response in § 1.951, the examiner may issue a right of appeal notice which shall include a final rejection and/or final decision favorable to patentability in accordance with 35 U.S.C. 134. The intent of limiting the appeal rights until after the examiner issues a ''Right of Appeal Notice'' is to specifically preclude the possibility of one party attempting to appeal prematurely while prosecution before the examiner is being continued by the other party.

Proposed § 1.953(b) provides that any time after the initial Office action on the merits in an *inter partes* reexamination, the patent owner and all third-party requesters may stipulate that the issues are appropriate for a final action, which would include a final rejection and/or a final determination favorable to patentability, and may request the issuance of a Right of Appeal Notice. If the examiner determines that no other issues are present or should be raised, a Right of Appeal Notice limited to the identified issues shall be issued. The request for an expedited notice will enable the parties to accelerate the *inter partes* reexamination proceeding. Proposed § 1.953(c) provides that the Right of Appeal Notice shall be a final action, which would include a final rejection and/or final decision favorable to patentability, and that no amendment under § 1.116 can be made in response to the Right of Appeal Notice. The Right of Appeal Notice shall set a one-month time period for either party to appeal. If no appeal is filed, the reexamination proceeding will be terminated, and the Director will proceed to issue a certificate under § 1.997 in accordance with the Right of Appeal Notice.

Proposed § 1.955 provides that interviews between the examiner and the patent owner and/or the third-party requester which discuss the merits of the proceeding will not be permitted in *inter partes* reexamination proceedings. Thus, no separate *ex parte* interviews will be permitted, and no *inter partes* interviews will be permitted. All communications between the Office and the patent owner which are directed to the merits of the proceeding must be in writing and filed with the Office for entry into the record of the proceeding. An informal amendment will not be accepted, as that would amount to an informal *ex parte* interview. The Office has reconsidered its initial position taken in the August 11, 1995, Notice of Proposed Rulemaking which proposed to permit owner-initiated interviews in which the patent owner and the third-party requester participate. Thus, in the present rule package, no interviews will be held, nor be permitted, in *inter partes* reexamination cases which discuss the merits of the proceeding. In other words, neither the patent owner nor the third-party requester will be able to initiate, nor participate in, an *ex parte* nor an *inter partes* interview which discusses the merits of the proceeding in an *inter partes* reexamination proceeding. The rationale for this is discussed above in Issue 18 of the consideration of the comments responsive to the August 11, 1995, Notice of Proposed Rulemaking.

Proposed § 1.956 relates to patent owner extensions of time for responding to a requirement of the Office in *inter partes* reexamination proceedings. As in *ex parte* reexamination practice, a patent owner may only obtain an extension of time for sufficient cause, and the request for such extension must be filed on or before the end of the period for response. Note that the time for the third-party requester to file comments to patent owner responses may not be extended, as set forth in § 1.947.

Proposed § 1.957(a) provides that a third-party requester's submission in *inter partes* reexamination may be refused consideration if it is untimely or is inappropriate. Proposed § 1.957(b) and (c) relate to the patent owner's failure to timely or appropriately respond in *inter partes* reexamination proceedings. In this event, if no claims are found patentable, the proceeding shall be terminated and a reexamination certificate shall be issued. If claims are found patentable, further prosecution shall be limited to the patentable claims, and any additional claims that do not expand the scope of the patentable claims. Proposed § 1.957(d) provides

that when the action by the patent owner is a bona fide attempt to respond and to advance the case, and is substantially a complete response to the Office action, but consideration of some matter or compliance with some requirement has been inadvertently omitted, an opportunity to explain and supply the omission may be given.

Proposed § 1.958(a) provides for the revival of terminated *inter partes* reexamination proceedings under the unavoidable delay provisions of § 1.137(a). The unavoidable delay provisions of 35 U.S.C. 133 are imported into and are applicable to *inter partes* reexamination proceedings under 35 U.S.C. 314. Proposed § 1.958(b) provides for the revival of terminated *inter partes* reexamination proceedings under the unintentional provisions of § 1.137(b). The unintentional delay fee provisions of 35 U.S.C. 41(a)(7) are imported into and are applicable to *inter partes* reexamination proceedings under section 4605 of S. 1948. Note, however, the unintentional delay fee provisions of 35 U.S.C. 41(a)(7) only become effective in reexamination proceedings on November 29, 2000 (one year after enactment of statute).

Proposed § 1.959 relates to appeals and cross appeals to the Board of Patent Appeals and Interferences in *inter partes* reexamination proceedings. Both patent owners and third-party requesters are given appeal rights in accordance with 35 U.S.C. 315.

Proposed § 1.961 relates to time of transfer of the jurisdiction of the appeal over to the Board of Patent Appeals and Interferences in *inter partes* reexamination proceedings.

Proposed § 1.962 relates to the definition of appellant and respondent in *inter partes* reexamination proceedings.

Proposed § 1.963 relates to the time periods for filing briefs in *inter partes* reexamination proceedings.

Proposed § 1.965 relates to the requirements of the appellant brief in *inter partes* reexamination proceedings.

Proposed § 1.967 relates to the requirements of the respondent brief in *inter partes* reexamination proceedings.

Proposed § 1.969 relates to the examiner's answer. An examiner's answer may not include a new ground of rejection nor a new decision favorable to patentability. In either case (if there is to be a new ground of rejection or a new decision favorable to patentability), prosecution should be reopened.

Proposed § 1.971 gives any appellant one opportunity to file a rebuttal brief following the examiner's answer. The rebuttal brief filed by an appellant who is the patent owner is limited to the issues raised in the examiner's answer and/or in any respondent brief. The rebuttal brief filed by an appellant who is a third-party requester is limited to the issues raised in the examiner's answer and/or in the patent owner's respondent brief. The rebuttal brief of a third-party requester may not be directed to the respondent brief of any other third-party requester. No new ground of rejection can be proposed by a third-party requester appellant.

Proposed § 1.973 relates to the oral hearing in *inter partes* reexamination proceedings.

Proposed § 1.975 relates to affidavits or declarations after appeal in *inter partes* reexamination proceedings.

Proposed § 1.977 relates to the decision by the Board of Patent Appeals and Interferences in *inter partes* reexamination proceedings. A reversal of an examiner's decision favorable to patentability (*i.e.*, a decision not to make a rejection proposed by the third-party requester) constitutes a decision adverse to patentability which will be set forth as a new ground of rejection under § 1.977(b).

Proposed § 1.979 relates to the procedure following the decision or dismissal by the Board of Patent Appeals and Interferences in *inter partes* reexamination proceedings.

Proposed § 1.981 relates to the procedure for the reopening of prosecution following the decision by the Board of Patent Appeals and Interferences in *inter partes* reexamination proceedings.

Proposed § 1.983 relates to the patent owner's right to appeal to the United States Court of Appeals for the Federal Circuit in *inter partes* reexamination proceedings. Under section 141, the patent owner in *inter partes* reexamination proceedings may appeal the decision of the Board of Patent Appeals and Interferences only to the United States Court of Appeals for the Federal Circuit. Under section 134(c), the third-party requester in *inter partes* reexamination proceedings may not appeal the decision of the Board of Patent Appeals and Interferences.

Proposed § 1.985 relates to notification of prior or concurrent proceedings in *inter partes* reexamination proceedings. Paragraph (a) requires the patent owner to notify the Office of any prior or concurrent proceeding involving the patent under *inter partes* reexamination. Paragraph (b) permits any member of the public to notify the Office of any prior or concurrent proceeding involving the patent under *inter partes* reexamination. Such notice, however, must be limited to merely providing notice without discussion of the issues in the *inter partes* reexamination. Any notice that includes a discussion of the issues will be returned to the sender.

Proposed § 1.987 provides that when a patent involved in an *inter partes* reexamination is concurrently involved in litigation, the Director shall determine whether or not to suspend the *inter partes* reexamination proceeding.

Proposed § 1.989 relates to the merger of concurrent reexamination proceedings.

Proposed § 1.991 relates to the merger of a concurrent reissue application and an *inter partes* reexamination proceeding.

Proposed § 1.993 relates to the suspension of a concurrent interference or an *inter partes* reexamination proceeding.

Proposed § 1.995 relates to the third-party requester's participation rights being preserved in a merged proceeding.

Proposed § 1.997 provides for the issuance of the reexamination certificate under 35 U.S.C. 316 after conclusion of an *inter partes* reexamination proceeding. The certificate will cancel any patent claims determined to be unpatentable, confirm any patent claims determined to be patentable, and incorporate into the patent any amended or new claims determined to be patentable. Once all of the claims have been canceled from the patent, the patent ceases to be enforceable for any purpose. Accordingly, any pending reissue proceeding or other Office proceeding relating to a patent for which a certificate that cancelled all of the patent claims has been issued will be terminated. This provides a degree of assurance to the public that patents with all the claims canceled via *inter partes* reexamination proceedings will not again be asserted.

Classification

Regulatory Flexibility Act

The Chief Counsel for Regulation of the Department of Commerce certified to the Chief Counsel for Advocacy, Small Business Administration, that the changes proposed in this notice, if adopted, would not have a significant impact on a substantial number of small entities (Regulatory Flexibility Act, 5 U.S.C. 605(b)). This rulemaking implements the provisions of Title IV, subtitle F (sections 4601 through 4608) of the ''American Inventors Protection Act of 1999,'' which permits a third-party requester to participate more extensively during the reexamination proceeding as well as giving them appeal rights. The changes proposed in

this notice (if adopted) would provide procedures for a third-party to request optional *inter partes* reexamination of a patent. The new *inter partes* proceedings are similar to the *ex parte* proceedings, although they are more complicated procedurally to accommodate the presence of the third-party.

Taking into account the overall similarities and additional complexity, it is reasonable to assume that a similar proportion of small entities will request *inter partes* reexamination as have requested *ex parte* reexamination. Furthermore, it is anticipated that *inter partes* reexamination requests will be filed by third-party requesters, while patent owners will continue to file *ex parte* reexamination requests. Approximately 400 *ex parte* reexamination filings have been received each year since 1992, of which 55% or 220 have been filed by third-party requesters. Since the beginning of the reexamination procedure, about 22.5% of the *ex parte* reexamination requesters have been small entities. If all 220 of the third-party filed reexamination requests were filed as requests for *inter partes* reexaminations, approximately 50 requests (22.5%) would come from small entities. The higher cost of the *inter partes* reexamination fee ($8,800) compared to the *ex parte* reexamination fee ($2,520) reflects the greatly expanded participation available to the third-party requester. In the *inter partes* proceeding, the third party requester has the right to comment on every response by the patent owner to the PTO, to be a party to any appeal by the patent owner to the Board of Patent Appeals and Interferences, and to appeal any determination of patentability to the Board. In the *ex parte* proceeding, the third-party requester's role is limited to the request for reexamination and a single reply to the patent owner's response. The third party requester also has no appeal rights in an *ex parte* reexamination. Therefore, the number of small businesses affected by these proposed optional *inter parte* reexamination rules is not significant, and the impact on each business, considering the benefits of greater participation throughout the *inter partes* proceeding, is not significant.

Executive Order 13132

This rulemaking does not contain policies with federalism implications sufficient to warrant preparation of a Federalism Assessment under Executive Order 13132 (August 4, 1999).

Executive Order 12866

This rulemaking has been determined to be not significant for purposes of Executive Order 12866 (September 30, 1993).

Paperwork Reduction Act

This notice of proposed rulemaking involves information collection requirements which are subject to review by the Office of Management and Budget (OMB) under the Paperwork Reduction Act of 1995 (44 U.S.C. 3501 *et seq.*). The collection of information involved in this notice of proposed rulemaking has been reviewed and previously approved by OMB under OMB control number 0651–0033.

As required by the Paperwork Reduction Act of 1995 (44 U.S.C. 3507(d)), the Patent and Trademark Office has submitted an information collection package to OMB for its review and approval of the proposed information collections under OMB control number 0651–0033. The Patent and Trademark Office is submitting this information collection to OMB for its review and approval because this notice of proposed rulemaking will add the request for optional *inter partes* reexamination of a patent to that collection.

The title, description and respondent description of the information collection is shown below with an estimate of the annual reporting burdens. Included in this estimate is the time for reviewing instructions, gathering and maintaining the data needed, and completing and reviewing the collection of information. The principal impact of the changes in this notice of proposed rulemaking is to implement the changes to Office practice necessitated by Title IV, subtitle F (sections 4601 through 4608) of the ''American Inventors Protection Act of 1999'' (enacted into law by § 1000(a)(9), Division B, of Pub. L. 106–113).

OMB Number: 0651–0033.

Title: Post Allowance and Refiling.

Form Numbers: PTO/SB/13/14/44/50–57; PTOL–85b.

Type of Review: Approved through September of 2000.

Affected Public: Individuals or Households, Business or Other For-Profit Institutions, Not-for-Profit Institutions and Federal Government.

Estimated Number of Respondents: 172,475.

Estimated Time Per Response: 0.3 hour.

Estimated Total Annual Burden Hours: 51,593.5 hours.

Needs and Uses: This collection of information is required to administer the patent laws pursuant to title 35, U.S.C., concerning the issuance of patents and related actions including correcting errors in printed patents, refiling of patent applications, requesting reexamination of a patent, and requesting a reissue patent to correct an error in a patent. The affected public includes any individual or institution whose application for a patent has been allowed or who takes action as covered by the applicable rules.

Comments are invited on: (1) Whether the collection of information is necessary for proper performance of the functions of the agency; (2) the accuracy of the agency's estimate of the burden; (3) ways to enhance the quality, utility, and clarity of the information to be collected; and (4) ways to minimize the burden of the collection of information to respondents.

Interested persons are requested to send comments regarding these information collections, including suggestions for reducing this burden, to Robert J. Spar, Director, Patent Examination Policy Law Office, Patent and Trademark Office, Washington, D.C. 20231, or to the Office of Information and Regulatory Affairs of OMB, New Executive Office Building, 725 17th St. NW, Room 10235, Washington, DC 20503, Attention: Desk Officer for the Patent and Trademark Office.

Notwithstanding any other provision of law, no person is required to respond to nor shall a person be subject to a penalty for failure to comply with a collection of information subject to the requirements of the Paperwork Reduction Act unless that collection of information displays a currently valid OMB control number.

List of Subjects in 37 CFR Part 1

Administrative practice and procedure, Courts, Freedom of Information, Inventions and patents, Reporting and record keeping requirements, Small Businesses.

For the reasons set out in the preamble and under the authority given to the Director of Patents and Trademarks by 35 U.S.C. 6, Part 1 of Title 37 CFR is amended as set forth below.

PART 1—RULES OF PRACTICE IN PATENT CASES

1. The authority citation for 37 CFR Part 1 would continue to read as follows:

Authority: 35 U.S.C. 6, unless otherwise noted.

2. Section 1.4(a)(2) is proposed to be revised to read as follows:

§ 1.4 Nature of correspondence and signature requirements.

(a) * * *

(2) Correspondence in and relating to a particular application or other proceeding in the Office. See particularly the rules relating to the filing, processing, or other proceedings of national applications in Subpart B, §§ 1.31 to 1.378; of international applications in Subpart C, §§ 1.401 to 1.499; of ex parte reexaminations of patents in Subpart D, §§ 1.501 to 1.570; of interferences in Subpart E, §§ 1.601 to 1.690; of extension of patent term in Subpart F, §§ 1.710 to 1.785; of inter partes reexaminations of patents in Subpart H, §§ 1.902 to 1.997; and of trademark applications §§ 2.11 to 2.189.

* * * * *

3. Section 1.6(d)(5) is proposed to be revised to read as follows:

§ 1.6 Receipt of Correspondence.

* * * * *

(d) * * *

(5) A request for reexamination under § 1.510 or § 1.913.

4. Sections 1.17(l) and (m) are proposed to be revised to read as follows:

§ 1.17 Patent application and reexamination processing fees.

* * * * *

(l) For filing a petition for the revival of an unavoidably abandoned application under 35 U.S.C. 111, 133, 364, or 371, for the delayed payment of the issue fee under 35 U.S.C. 151, or for the revival of an unavoidably terminated reexamination proceeding under 35 U.S.C. 133 (§ 1.137(a)):

By a small entity (§ 1.9(f))	$55.00
By other than a small entity ...	110.00

(m) For filing a petition for revival of an unintentionally abandoned application, for the unintentionally delayed payment of the fee for issuing a patent, or for the revival of an unintentionally terminated reexamination proceeding under 35 U.S.C. 41(a)(7) (§ 1.137(b)):

By a small entity (§ 1.9(f))	$605.00
By other than a small entity ...	1,210.00

* * * * *

5. Section 1.20(c) is proposed to be revised to read as follows:

§ 1.20 Post-issuance and reexamination fees.

* * * * *

(c) In reexamination proceedings

(1) For filing a request for *ex parte* reexamination (§ 1.510(a))	$2,520.00
(2) For filing a request for *inter partes* reexamination (§ 1.915(a))	8,800.00

* * * * *

6. Section 1.25(b) is proposed to be revised to read as follows:

§ 1.25 Deposit accounts.

* * * * *

(b) Filing, issue, appeal, international-type search report, international application processing, petition, and post-issuance fees may be charged against these accounts if sufficient funds are on deposit to cover such fees. A general authorization to charge all fees, or only certain fees, set forth in §§ 1.16 to 1.18 to a deposit account containing sufficient funds may be filed in an individual application, either for the entire pendency of the application or with respect to a particular paper filed. An authorization to charge to a deposit account the fee for a request for reexamination pursuant to § 1.510 or § 1.913 and any other fees required in a reexamination proceeding of a patent may also be filed. An authorization to charge a fee to a deposit account will not be considered payment of the fee on the date the authorization to charge the fee is effective as to the particular fee to be charged unless sufficient funds are present in the account to cover the fee.

7. Section 1.26(c) is proposed to be revised to read as follows:

§ 1.26 Refunds.

* * * * *

(c) If the Director decides not to institute a reexamination proceeding, for *ex parte* reexaminations filed under § 1.510 a refund of $1,690.00 will be made to the reexamination requester. For *inter partes* reexaminations filed under § 1.913, a refund of $7,970 will be made to the reexamination requester. Reexamination requester should indicate the form in which any refund should be made (*e.g.*, by check, electronic funds transfer, credit to a deposit account, *etc.*). Generally, reexamination refunds will be issued in the form that the original payment was provided.

8. Section 1.112 is proposed to be revised to read as follows:

§ 1.112 Reconsideration before final action.

After reply by applicant or patent owner (§ 1.111) to a non-final action, the application or the patent under reexamination will be reconsidered and again examined. The applicant, or in the case of a reexamination proceeding the patent owner and any third-party requester, will be notified if claims are rejected, objections or requirements made, or decisions favorable to patentability are made, in the same manner as after the first examination. Applicant or patent owner may reply to such Office action in the same manner provided in § 1.111, with or without amendment, unless such Office action indicates that it is made final (§§ 1.113), or in an *inter partes* reexamination, that it is an action closing prosecution (§ 1.949) or a right of appeal notice (§ 1.953).

9. Section 1.113(a) is proposed to be revised to read as follows:

§ 1.113 Final rejection or action.

(a) On the second or any subsequent examination or consideration by the examiner the rejection or other action may be made final, whereupon applicant's, or for *ex parte* reexaminations filed under § 1.510 patent owner's, reply is limited to appeal in the case of rejection of any claim (§ 1.191), or to amendment as specified in § 1.116. Petition may be taken to the Director in the case of objections or requirements not involved in the rejection of any claim (§ 1.181). Reply to a final rejection or action must include cancellation of, or appeal from the rejection of, each rejected claim. If any claim stands allowed, the reply to a final rejection or action must comply with any requirements or objections as to form. For final actions in an *inter partes* reexamination filed under § 1.913, see § 1.953.

* * * * *

10. Sections 1.116(a) and (c) are proposed to be revised to read as follows:

§ 1.116 Amendments after final action, action closing prosecution, right of appeal notice, or appeal.

(a) After a final rejection or other final action (§ 1.113) in an application or in an *ex parte* reexamination filed under § 1.510, or an action closing prosecution (§ 1.949) in an *inter partes* reexamination filed under § 1.913, amendments may be made canceling claims or complying with any requirement of form expressly set forth in a previous Office action. Amendments presenting rejected claims in better form for consideration on appeal may be admitted. The admission of, or refusal to admit, any amendment after a final rejection, a final action, an action closing prosecution or any related proceedings, will not operate to relieve the application or patent under reexamination from its condition as subject to appeal or to save the application from abandonment under § 1.135, or the reexamination from termination. No amendment can be

made in an *inter partes* reexamination proceeding after the right of appeal notice under § 1.953 except as provided for in paragraph (c) of this section.

* * * * *

(c) No amendment can be made as a matter of right in appealed cases. After decision on appeal, amendments can only be made as provided in §§ 1.198 and 1.981, or to carry into effect a recommendation under §§ 1.196 or 1.977.

11. Section 1.121(c) is proposed to be revised to read as follows:

§ 1.121 Manner of making amendments.

* * * * *

(c) *Amendments in reexamination proceedings.* Any proposed amendment to the description and claims in patents involved in reexamination proceedings in both *ex parte* reexaminations filed under § 1.510 and *inter partes* reexaminations filed under § 1.913 must be made in accordance with § 1.530(d).

12. Section 1.136(a) (2) and (b) are proposed to be revised to read as follows:

§ 1.136 Extensions of time.

(a) * * *

(2) The date on which the petition and the fee have been filed is the date for purposes of determining the period of extension and the corresponding amount of the fee. The expiration of the time period is determined by the amount of the fee paid. A reply must be filed prior to the expiration of the period of extension to avoid abandonment of the application (§ 1.135), but in no situation may an applicant reply later than the maximum time period set by statute, or be granted an extension of time under paragraph (b) of this section when the provisions of this paragraph are available. See § 1.136(b) for extensions of time relating to proceedings pursuant to §§ 1.193(b), 1.194, 1.196 or 1.197; § 1.304 for extensions of time to appeal to the U.S. Court of Appeals for the Federal Circuit or to commence a civil action; § 1.550(c) for extensions of time in *ex parte* reexamination proceedings, § 1.956 for extensions of time in *inter partes* reexamination proceedings; and § 1.645 for extensions of time in interference proceedings.

* * * * *

(b) When a reply cannot be filed within the time period set for such reply and the provisions of paragraph (a) of this section are not available, the period for reply will be extended only for sufficient cause and for a reasonable time specified. Any request for an extension of time under this paragraph must be filed on or before the day on which such reply is due, but the mere filing of such a request will not effect any extension under this paragraph. In no situation can any extension carry the date on which reply is due beyond the maximum time period set by statute. See § 1.304 for extensions of time to appeal to the U.S. Court of Appeals for the Federal Circuit or to commence a civil action; § 1.645 for extensions of time in interference proceedings; § 1.550(c) for extensions of time in *ex parte* reexamination proceedings; and § 1.956 for extensions of time in *inter partes* reexamination proceedings.

13. Section 1.137 is proposed to be amended by revising its heading, the introductory text of paragraph (a), the introductory text of paragraph (b), and paragraph (d) to read as follows:

§ 1.137 Revival of abandoned application, lapsed patent, or terminated reexamination proceeding.

(a) *Unavoidable.* Where the delay in reply was unavoidable, a petition may be filed to revive an abandoned application, a reexamination proceeding terminated under §§ 1.550(d) and 1.957(b) and (c), or a lapsed patent pursuant to this paragraph. A grantable petition pursuant to this paragraph must be accompanied by:

* * * * *

(b) *Unintentional.* Where the delay in reply was unintentional, a petition may be filed to revive an abandoned application, a reexamination proceeding terminated under §§ 1.550(d) and 1.957(b) and (c), or a lapsed patent pursuant to this paragraph. A grantable petition pursuant to this paragraph must be accompanied by:

* * * * *

(d) Any request for reconsideration or review of a decision refusing to revive an abandoned application, a terminated reexamination proceeding, or lapsed patent upon petition filed pursuant to this section, to be considered timely, must be filed within two months of the decision refusing to revive or within such time as set in the decision. Unless a decision indicates otherwise, this time period may be extended under the provisions of § 1.136 for an abandoned application or lapsed patent; under the provisions of § 1.550(c) for a terminated *ex parte* reexamination proceeding filed under § 1.510; and under the provisions of § 1.956 for a terminated *inter partes* reexamination proceeding filed under § 1.913.

* * * * *

14. Sections 1.181(a) and (c) are proposed to be revised to read as follows:

1.181 Petition to the Director.

(a) Petition may be taken to the Director:

(1) From any action or requirement of any examiner in the *ex parte* prosecution of an application, or in the *ex parte* or *inter partes* prosecution of a reexamination proceeding which is not subject to appeal to the Board of Patent Appeals and Interferences or to the court;

(2) In cases in which a statute or the rules specify that the matter is to be determined directly by or reviewed by the Director; and

(3) To invoke the supervisory authority of the Director in appropriate circumstances.

(4) For petitions in interferences, see § 1.644.

* * * * *

(c) When a petition is taken from an action or requirement of an examiner in the *ex parte* prosecution of an application, or in the *ex parte* or *inter partes* prosecution of a reexamination proceeding, it may be required that there have been a proper request for reconsideration (§ 1.111) and a repeated action by the examiner. The examiner may be directed by the Director to furnish a written statement, within a specified time, setting forth the reasons for his or her decision upon the matters averred in the petition, supplying a copy thereof to the petitioner.

* * * * *

15. Section 1.191(a) is proposed to be revised to read as follows:

§ 1.191 Appeal to Board of Patent Appeals and Interferences.

(a) Every applicant for a patent or for reissue of a patent, and every owner of a patent under *ex parte* reexamination filed under § 1.510 for a patent that issued from an original application filed in the United States before November 29, 1999, any of whose claims has been twice or finally (§ 1.113) rejected, may appeal from the decision of the examiner to the Board of Patent Appeals and Interferences by filing a notice of appeal and the fee set forth in § 1.17(b) within the time period provided under §§ 1.134 and 1.136 for reply. Notwithstanding the above, for an *ex parte* reexamination proceeding filed under § 1.510 for a patent that issued from an original application filed in the United States on or after November 29, 1999, no appeal may be filed until the claims have been finally rejected (§ 1.113). Appeals to the Board of Patent Appeals and Interferences in *inter partes* reexamination proceedings filed under § 1.913 are controlled by §§ 1.959 through 1.981. Sections 1.191 through

1.198 are not applicable to appeals in *inter partes* reexamination proceedings filed under § 1.913.

16. Section 1.301 is proposed to be revised to read as follows:

§ 1.301 Appeal to U.S. Court of Appeals for the Federal Circuit.

Any applicant or any owner of a patent involved in any *ex parte* reexamination proceeding filed under § 1.510, dissatisfied with the decision of the Board of Patent Appeals and Interferences, and any party to an interference dissatisfied with the decision of the Board of Patent Appeals and Interferences, may appeal to the U.S. Court of Appeals for the Federal Circuit. The appellant must take the following steps in such an appeal: In the U.S. Patent and Trademark Office, file a written notice of appeal directed to the Director (see §§ 1.302 and 1.304); and in the Court, file a copy of the notice of appeal and pay the fee for appeal as provided by the rules of the Court. For *inter partes* reexamination proceedings filed under § 1.913, § 1.983 is controlling.

17. Section 1.303 is proposed to be amended by revising paragraphs (a) and (b) and by adding a new paragraph (d) to read as follows:

§ 1.303 Civil action under 35 U.S.C. 145, 146, 306.

(a) Any applicant or any owner of a patent involved in an *ex parte* reexamination proceeding filed under § 1.510 for a patent that issues from an original application filed in the United States before November 29, 1999, dissatisfied with the decision of the Board of Patent Appeals and Interferences, and any party to an interference dissatisfied with the decision of the Board of Patent Appeals and Interferences may, instead of appealing to the U.S. Court of Appeals for the Federal Circuit (§ 1.301), have remedy by civil action under 35 U.S.C. 145 or 146, as appropriate. Such civil action must be commenced within the time specified in § 1.304.

(b) If an applicant in an *ex parte* case or an owner of a patent involved in an *ex parte* reexamination proceeding filed under § 1.510 for a patent that issues from an original application filed in the United States before November 29, 1999, has taken an appeal to the U.S. Court of Appeals for the Federal Circuit, he or she thereby waives his or her right to proceed under 35 U.S.C. 145.

* * * * *

(d) For an *ex parte* reexamination proceeding filed under § 1.510 for a patent that issues from an original application filed in the United States on or after November 29, 1999, and for an *inter partes* reexamination proceeding filed under § 1.913, no remedy by civil action under 35 U.S.C. 145 is available.

18. Sections 1.304(a)(1) and (a)(2) are proposed to be revised to read as follows:

§ 1.304 Time for appeal or civil action.

(a)(1) The time for filing the notice of appeal to the U.S. Court of Appeals for the Federal Circuit (§ 1.302) or for commencing a civil action (§ 1.303) is two months from the date of the decision of the Board of Patent Appeals and Interferences. If a request for rehearing or reconsideration of the decision is filed within the time period provided under § 1.197(b), § 1.658(b), or § 1.979(a), the time for filing an appeal or commencing a civil action shall expire two months after action on the request. In interferences the time for filing a cross-appeal or cross-action expires:

(i) 14 days after service of the notice of appeal or the summons and complaint; or

(ii) Two months after the date of decision of the Board of Patent Appeals and Interferences, whichever is later.

(2) The time periods set forth in this section are not subject to the provisions of §§ 1.136, 1.550(c), 1.956, or § 1.645 (a) or (b).

* * * * *

19. The heading for Subpart D is proposed to be revised to read as follows:

Subpart D—*Ex Parte* Reexamination of Patents

* * * * *

20. Section 1.501 is proposed to be amended by revising its heading and paragraph (a) to read as follows:

§ 1.501 Citation of prior art in patent and *ex parte* reexamination files.

(a) At any time during the period of enforceability of a patent, any person may cite to the Office in writing prior art consisting of patents or printed publications which that person states to be pertinent and applicable to the patent and believes to have a bearing on the patentability of any claim of the patent. If the citation is made by the patent owner, the explanation of pertinency and applicability may include an explanation of how the claims differ from the prior art. Such citations shall be entered in the patent file except as set forth in this section. Citations by the patent owner under § 1.555 and by an *ex parte* reexamination requester under either § 1.510 or § 1.535 will be entered in the reexamination file during a reexamination proceeding. The entry in the patent file of citations submitted after the date of an order to reexamine pursuant to § 1.525 by persons other than the patent owner, or an *ex parte* reexamination requester under either § 1.510 or § 1.535, will be delayed until the reexamination proceeding has been terminated. See § 1.902 for processing of prior art citations in patent files and the reexamination file during an *inter partes* reexamination proceeding filed under § 1.913.

* * * * *

21. The undesignated center heading following § 1.501 is proposed to be revised to read as follows:

Request for *Ex Parte* Reexamination

22. Section 1.510 is proposed to be amended by revising its heading and the text of paragraphs (a) and (b)(4) to read as follows:

§ 1.510 Request for ex parte reexamination.

(a) Any person may, at any time during the period of enforceability of a patent, file a request for an *ex parte* reexamination by the Office of any claim of the patent on the basis of prior art patents or printed publications cited under § 1.501. The request must be accompanied by the fee for requesting reexamination set in § 1.20(c)(1).

(b) Any request for *ex parte* reexamination must include the following parts:

* * * * *

(4) A copy of the entire patent including the front face, drawings, and specification/claims (in double column format) for which reexamination is requested, and a copy of any disclaimer, certificate of correction, or reexamination certificate issued in the patent. All copies must have each page plainly written on only one side of a sheet of paper.

* * * * *

23. Section 1.515 is proposed to be revised to read as follows:

§ 1.515 Determination of the request for ex parte reexamination.

(a) Within three months following the filing date of a request for an *ex parte* reexamination, an examiner will consider the request and determine whether or not a substantial new question of patentability affecting any claim of the patent is raised by the request and the prior art cited therein, with or without consideration of other patents or printed publications. The examiner's determination will be based on the claims in effect at the time of the determination and will become a part of the official file of the patent and will be mailed to the patent owner at the

address as provided for in § 1.33(c) and to the person requesting reexamination.

(b) Where no substantial new question of patentability has been found, a refund of a portion of the fee for requesting *ex parte* reexamination will be made to the requester in accordance with § 1.26(c).

(c) The requester may seek review by a petition to the Director under § 1.181 within one month of the mailing date of the examiner's determination refusing *ex parte* reexamination. Any such petition must comply with § 1.181(b). If no petition is timely filed or if the decision on petition affirms that no substantial new question of patentability has been raised, the determination shall be final and nonappealable.

24. Section 1.520 is proposed to be revised to read as follows:

§ 1.520 *Ex parte* reexamination at the initiative of the Director.

The Director, at any time during the period of enforceability of a patent, may determine whether or not a substantial new question of patentability is raised by patents or printed publications which have been discovered by the Director or which have been brought to the Director's attention even though no request for reexamination has been filed in accordance with § 1.510 or § 1.913. The Director may initiate *ex parte* reexamination without a request for reexamination pursuant to § 1.510 or § 1.913. Normally requests from outside the Office that the Director undertake reexamination on his own initiative will not be considered. Any determination to initiate *ex parte* reexamination under this section will become a part of the official file of the patent and will be mailed to the patent owner at the address as provided for in § 1.33(c).

25. The undesignated center heading following § 1.520 is proposed to be revised to read as follows:

***Ex Parte* Reexamination**

26. Section 1.525 is proposed to be revised to read as follows:

§ 1.525 Order for *ex parte* reexamination.

(a) If a substantial new question of patentability is found pursuant to § 1.515 or § 1.520, the determination will include an order for *ex parte* reexamination of the patent for resolution of the question. If the order for *ex parte* reexamination resulted from a petition pursuant to § 1.515(c), the *ex parte* reexamination will ordinarily be conducted by an examiner other than the examiner responsible for the initial determination under § 1.515(a).

(b) The notice published in the *Official Gazette* under § 1.11(c) will be considered to be constructive notice and *ex parte* reexamination will proceed.

27. Section 1.530 is proposed to be amended by revising its heading and paragraphs (a), (b), (c) and (d), introductory text, to read as follows:

§ 1.530 Statement by patent owner in *ex parte* reexamination; amendment by patent owner in *ex parte* reexamination or inter partes reexamination.

(a) Except as provided in § 1.510(e), no statement or other response by the patent owner in an *ex parte* reexamination proceeding shall be filed prior to the determinations made in accordance with § 1.515 or § 1.520. If a premature statement or other response is filed by the patent owner it will not be acknowledged or considered in making the determination.

(b) The order for *ex parte* reexamination will set a period of not less than two months from the date of the order within which the patent owner may file a statement on the new question of patentability including any proposed amendments the patent owner wishes to make.

(c) Any statement filed by the patent owner shall clearly point out why the subject matter as claimed is not anticipated or rendered obvious by the prior art patents or printed publications, either alone or in any reasonable combinations. Where the reexamination request was filed by a third-party requester, any statement filed by the patent owner must be served upon the *ex parte* reexamination requester in accordance with § 1.248.

(d) *Amendments in reexamination proceedings.* Amendments in both *ex parte* and *inter partes* reexamination proceedings are made by filing a paper, in compliance with paragraph (d)(5) of this section, directing that specified amendments be made.

* * * * *

28. Section 1.535 is proposed to be revised to read as follows:

§ 1.535 Reply by third-party requester in *ex parte* reexamination.

A reply to the patent owner's statement under § 1.530 may be filed by the *ex parte* reexamination requester within two months from the date of service of the patent owner's statement. Any reply by the *ex parte* requester must be served upon the patent owner in accordance with § 1.248. If the patent owner does not file a statement under § 1.530, no reply or other submission from the *ex parte* reexamination requester will be considered.

29. Section 1.540 is proposed to be revised to read as follows:

§ 1.540 Consideration of responses in *ex parte* reexamination.

The failure to timely file or serve the documents set forth in § 1.530 or in § 1.535 may result in their being refused consideration. No submissions other than the statement pursuant to § 1.530 and the reply by the *ex parte* reexamination requester pursuant to § 1.535 will be considered prior to examination.

30. Section 1.550 is proposed to be revised to read as follows:

§ 1.550 Conduct of *ex parte* reexamination proceedings.

(a) All *ex parte* reexamination proceedings, including any appeals to the Board of Patent Appeals and Interferences, will be conducted with special dispatch within the Office. After issuance of the *ex parte* reexamination order and expiration of the time for submitting any responses thereto, the examination will be conducted in accordance with §§ 1.104 through 1.116, and will result in the issuance of an *ex parte* reexamination certificate under § 1.570.

(b) The patent owner in an *ex parte* reexamination proceeding will be given at least thirty days to respond to any Office action. Such response may include further statements in response to any rejections or proposed amendments or new claims to place the patent in a condition where all claims, if amended as proposed, would be patentable.

(c) The time for taking any action by a patent owner in an *ex parte* reexamination proceeding will be extended only for sufficient cause and for a reasonable time specified. Any request for such extension must be filed on or before the day on which action by the patent owner is due, but in no case will the mere filing of a request affect any extension. See § 1.304(a) for extensions of time for filing a notice of appeal to the U.S. Court of Appeals for the Federal Circuit or for commencing a civil action.

(d) If the patent owner fails to file a timely and appropriate response to any Office action or any written statement of an interview required under § 1.560(b), the *ex parte* reexamination proceeding will be terminated and the Director will proceed to issue a certificate under § 1.570 in accordance with the last action of the Office.

(e) If a response by the patent owner is not timely filed in the Office,

(1) The delay in filing such response may be excused if it is shown to the satisfaction of the Director that the delay was unavoidable; a petition to accept an

unavoidably delayed response must be filed in compliance with § 1.137(a); or

(2) The response may nevertheless be accepted if the delay was unintentional; a petition to accept an unintentionally delayed response must be filed in compliance with § 1.137(b).

(f) The reexamination requester will be sent copies of Office actions issued during the *ex parte* reexamination proceeding. After filing of a request for *ex parte* reexamination by a third-party requester, any document filed by either the patent owner or the third-party requester must be served on the other party in the reexamination proceeding in the manner provided by § 1.248. The document must reflect service or the document may be refused consideration by the Office.

(g) The active participation of the *ex parte* reexamination requester ends with the reply pursuant to § 1.535, and no further submissions on behalf of the reexamination requester will be acknowledged or considered. Further, no submissions on behalf of any third parties will be acknowledged or considered unless such submissions are:

(1) In accordance with §§ 1.510 or 1.535; or

(2) Entered in the patent file prior to the date of the order for *ex parte* reexamination pursuant to § 1.525.

(h) Submissions by third parties, filed after the date of the order for *ex parte* reexamination pursuant to § 1.525, must meet the requirements of and will be treated in accordance with § 1.501(a).

31. Section 1.552 is proposed to be revised to read as follows:

§ 1.552 Scope of reexamination in *ex parte* reexamination proceedings.

(a) Claims in an *ex parte* reexamination proceeding will be examined on the basis of patents or printed publications and, with respect to subject matter added or deleted in the reexamination proceeding, on the basis of the requirements of 35 U.S.C. 112.

(b) Claims in an *ex parte* reexamination proceeding will not be permitted to enlarge the scope of the claims of the patent.

(c) Issues other than those indicated in paragraphs (a) and (b) of this section will not be resolved in a reexamination proceeding. If such issues are raised by the patent owner or third-party requester during a reexamination proceeding, the existence of such issues will be noted by the examiner in the next Office action, in which case the patent owner may desire to consider the advisability of filing a reissue application to have such issues considered and resolved.

32. Section 1.555 is proposed to be amended by revising its heading to read as follows:

§ 1.555 Information material to patentability in *ex parte* reexamination and *inter partes* reexamination proceedings.

* * * * *

33. Section 1.560 is proposed to be revised to read as follows:

§ 1.560 Interviews in *ex parte* reexamination proceedings.

(a) Interviews in *ex parte* reexamination proceedings pending before the Office between examiners and the owners of such patents or their attorneys or agents of record must be conducted in the Office at such times, within Office hours, as the respective examiners may designate. Interviews will not be permitted at any other time or place without the authority of the Director. Interviews for the discussion of the patentability of claims in patents involved in *ex parte* reexamination proceedings will not be conducted prior to the first official action thereon. Interviews should be arranged for in advance. Requests that reexamination requesters participate in interviews with examiners will not be granted.

(b) In every instance of an interview with an examiner in an *ex parte* reexamination proceeding, a complete written statement of the reasons presented at the interview as warranting favorable action must be filed by the patent owner. An interview does not remove the necessity for response to Office actions as specified in § 1.111. Patent owner's response to an outstanding Office action after the interview does not remove the necessity for filing the written statement. The written statement must be filed as a separate part of a response to an Office action outstanding at the time of the interview, or as a separate paper within one month from the date of the interview, whichever is later.

34. Section 1.565 is proposed to be revised to read as follows:

§ 1.565 Concurrent office proceedings which include an *ex parte* reexamination proceeding.

(a) In an *ex parte* reexamination proceeding before the Office, the patent owner shall call the attention of the Office to any prior or concurrent proceedings in which the patent is or was involved such as an interference, reissue, *ex parte* reexamination, *inter partes* reexamination, or litigation and the results of such proceedings. See § 1.985 for notification of prior or concurrent proceedings in an *inter partes* reexamination proceeding.

(b) If a patent in the process of *ex parte* reexamination is or becomes involved in litigation, the Director shall determine whether or not to suspend the reexamination. See § 1.987 for *inter partes* reexamination proceedings.

(c) If *ex parte* reexamination is ordered while a prior *ex parte* reexamination proceeding is pending and prosecution has not been terminated, the *ex parte* reexamination proceedings will be consolidated and result in the issuance of a single certificate under § 1.570. For merger of *inter partes* reexamination proceedings, see § 1.989(a). For merger of *ex parte* reexamination and *inter partes* reexamination proceedings, see § 1.989(b).

(d) If a reissue application and an *ex parte* reexamination proceeding on which an order pursuant to § 1.525 has been mailed are pending concurrently on a patent, a decision will normally be made to merge the two proceedings or to suspend one of the two proceedings. Where merger of a reissue application and an *ex parte* reexamination proceeding is ordered, the merged examination will be conducted in accordance with §§ 1.171 through 1.179 and the patent owner will be required to place and maintain the same claims in the reissue application and the *ex parte* reexamination proceeding during the pendency of the merged proceeding. The examiner's actions and responses by the patent owner in a merged proceeding will apply to both the reissue application and the *ex parte* reexamination proceeding and be physically entered into both files. Any *ex parte* reexamination proceeding merged with a reissue application shall be terminated by the grant of the reissued patent. For merger of a reissue application and an *inter partes* reexamination, see § 1.991.

(e) If a patent in the process of *ex parte* reexamination is or becomes involved in an interference, the Director may suspend the reexamination or the interference. The Director will not consider a request to suspend an interference unless a motion (§ 1.635) to suspend the interference has been presented to, and denied by, an administrative patent judge and the request is filed within ten (10) days of a decision by an administrative patent judge denying the motion for suspension or such other time as the administrative patent judge may set. For concurrent *inter partes* reexamination and interference of a patent, see § 1.993.

35. The undesignated center heading following § 1.565 is proposed to be revised to read as follows:

***Ex Parte* Reexamination Certificate**

36. Section 1.570 is proposed to be revised to read as follows:

§ 1.570 Issuance of *ex parte* reexamination certificate after *ex parte* reexamination proceedings.

(a) Upon the conclusion of *ex parte* reexamination proceedings, the Director will issue an *ex parte* reexamination certificate in accordance with 35 U.S.C. 307 setting forth the results of the *ex parte* reexamination proceeding and the content of the patent following the *ex parte* reexamination proceeding.

(b) An *ex parte* reexamination certificate will be issued in each patent in which an *ex parte* reexamination proceeding has been ordered under § 1.525 and has not been merged with any *inter partes* reexamination proceeding pursuant to § 1.989(a). Any statutory disclaimer filed by the patent owner will be made part of the *ex parte* reexamination certificate.

(c) The *ex parte* reexamination certificate will be mailed on the day of its date to the patent owner at the address as provided for in § 1.33(c). A copy of the *ex parte* reexamination certificate will also be mailed to the requester of the *ex parte* reexamination proceeding.

(d) If an *ex parte* reexamination certificate has been issued which cancels all of the claims of the patent, no further Office proceedings will be conducted with regard to that patent or any reissue applications or any reexamination requests relating thereto.

(e) If the *ex parte* reexamination proceeding is terminated by the grant of a reissued patent as provided in § 1.565(d), the reissued patent will constitute the *ex parte* reexamination certificate required by this section and 35 U.S.C. 307.

(f) A notice of the issuance of each *ex parte* reexamination certificate under this section will be published in the *Official Gazette* on its date of issuance.

37. Subpart H is proposed to be added to read as follows:

Subpart H—*Inter Partes* Reexamination of Patents

Prior Art Citations

Sec.
1.902 Processing of prior art citations during an *inter partes* reexamination proceeding.

Requirements for *Inter partes* Reexamination Proceedings

1.903 Service of papers on parties in *inter partes* reexamination.
1.904 Notice of *inter partes* reexamination in *Official Gazette*.
1.905 Submission of papers by public in *inter partes* reexamination.
1.906 Scope of reexamination in *inter partes* reexamination proceeding.
1.907 *Inter partes* reexamination prohibited.
1.913 Persons eligible to file request for *inter partes* reexamination.
1.915 Content of request for *inter partes* reexamination.
1.919 Filing date of request for *inter partes* reexamination.
1.923 Examiner's determination on the request for *inter partes* reexamination.
1.925 Partial refund if request for *inter partes* reexamination is not ordered.
1.927 Petition to review refusal to order *inter partes* reexamination.

***Inter Partes* Reexamination of Patents**

1.931 Order for *inter partes* reexamination.

Information Disclosure in *Inter Partes* Reexamination

1.933 Patent owner duty of disclosure in *inter partes* reexamination proceedings.

Office Actions and Responses (Before the Examiner) in *Inter partes* Reexamination

1.935 Initial Office action usually accompanies order for *inter partes* reexamination.
1.937 Conduct of *inter partes* reexamination.
1.939 Unauthorized papers in *inter partes* reexamination.
1.941 Amendments by patent owner in *inter partes* reexamination.
1.943 Requirements of responses, written comments, and briefs in *inter partes* reexamination.
1.945 Response to Office action by patent owner in *inter partes* reexamination.
1.947 Comments by third-party requester to patent owner's response in *inter partes* reexamination.
1.948 Limitations on submission of prior art by third-party requester following the order for *inter partes* reexamination.
1.949 Examiner's Office action closing prosecution in *inter partes* reexamination.
1.951 Options after Office action closing prosecution in *inter partes* reexamination.
1.953 Examiner's Right of Appeal Notice in *inter partes* reexamination.

Interviews Prohibited in *Inter Partes* Reexamination

1.955 Interviews prohibited in *inter partes* reexamination proceedings.

Extensions of Time, Termination of Proceedings, and Petitions to Revive in *Inter Partes* Reexamination

1.956 Patent owner extensions of time in *inter partes* reexamination.
1.957 Failure to file a timely, appropriate or complete response or comment in *inter partes* reexamination.
1.958 Petition to revive terminated *inter partes* reexamination or claims terminated for lack of patent owner response.

Appeal to the Board of Patent Appeals and Interferences in *Inter Partes* Reexamination

1.959 Notice of appeal and cross appeal to Board of Patent Appeals and Interferences in *inter partes* reexamination.
1.961 Jurisdiction over appeal in *inter partes* reexamination.
1.962 Appellant and respondent in *inter partes* reexamination defined.
1.963 Time for filing briefs in *inter partes* reexamination.
1.965 Appellant brief in *inter partes* reexamination.
1.967 Respondent brief in *inter partes* reexamination.
1.969 Examiner's answer in *inter partes* reexamination.
1.971 Rebuttal brief in *inter partes* reexamination.
1.973 Oral hearing in *inter partes* reexamination.
1.975 Affidavits or declarations after appeal in *inter partes* reexamination.
1.977 Decision by the Board of Patent Appeals and Interferences; remand to examiner in *inter partes* reexamination.
1.979 Action following decision by the Board of Patent Appeals and Interferences or dismissal of appeal in *inter partes* reexamination.
1.981 Reopening after decision by the Board of Patent Appeals and Interferences in *inter partes* reexamination.

Patent Owner Appeal to the United States Court of Appeals for the Federal Circuit in *Inter Partes* Reexamination

1.983 Patent owner appeal to the United States Court of Appeals for the Federal Circuit in ***inter partes*** reexamination.

Concurrent Proceedings Involving Same Patent in *Inter Partes* Reexamination

1.985 Notification of prior or concurrent proceedings in *inter partes* reexamination.
1.987 Suspension of *inter partes* reexamination proceeding due to litigation.
1.989 Merger of concurrent reexamination proceedings.
1.991 Merger of concurrent reissue application and *inter partes* reexamination proceeding.
1.993 Suspension of concurrent interference and *inter partes* reexamination proceeding.
1.995 Third-party requester's participation rights preserved in merged proceeding.

Reexamination Certificate in *Inter Partes* Reexamination

1.997 Issuance of *inter partes* reexamination certificate.

Prior Art Citations

§ 1.902 Processing of prior art citations during an *inter partes* reexamination proceeding.

Citations by the patent owner in accordance with § 1.933 and by an *inter partes* reexamination third-party requester under §§ 1.915 or 1.948 will be entered in the *inter partes*

reexamination file. The entry in the patent file of other citations submitted after the date of an order for reexamination pursuant to § 1.931 by persons other than the patent owner, or the third-party requester under either § 1.915 or § 1.948, will be delayed until the *inter partes* reexamination proceeding has been terminated.

Requirements for *Inter Partes* Reexamination Proceedings

§ 1.903 Service of papers on parties in *inter partes* reexamination.

The patent owner and the third-party requester will be sent copies of Office actions issued during the *inter partes* reexamination proceeding. After filing of a request for *inter partes* reexamination by a third-party requester, any document filed by either the patent owner or the third-party requester must be served on every other party in the reexamination proceeding in the manner provided in § 1.248. Any document must reflect service or the document may be refused consideration by the Office. The failure of the patent owner or the third-party requester to serve documents may result in their being refused consideration.

§ 1.904 Notice of *inter partes* reexamination in *Official Gazette*.

A notice of the filing of an *inter partes* reexamination request will be published in the *Official Gazette*. The notice published in the *Official Gazette* under § 1.11(c) will be considered to be constructive notice of the *inter partes* reexamination proceeding and *inter partes* reexamination will proceed.

§ 1.905 Submission of papers by public in *inter partes* reexamination.

Unless specifically provided for, no submissions on behalf of any third parties other than third-party requesters as defined in 35 U.S.C. 100(e) will be considered unless such submissions are in accordance with § 1.915 or entered in the patent file prior to the date of the order for reexamination pursuant to § 1.931. Submissions by third parties, other than third-party requesters, filed after the date of the order for reexamination pursuant to § 1.931, must meet the requirements of § 1.501 and will be treated in accordance with § 1.902. Submissions which do not meet the requirements of § 1.501 will be returned.

§ 1.906 Scope of reexamination in *inter partes* reexamination proceeding.

(a) Claims in an *inter partes* reexamination proceeding will be examined on the basis of patents or printed publications and, with respect to subject matter added or deleted in the reexamination proceeding, on the basis of the requirements of 35 U.S.C. 112.

(b) Claims in an *inter partes* reexamination proceeding will not be permitted to enlarge the scope of the claims of the patent.

(c) Issues other than those indicated in paragraphs (a) and (b) of this section will not be resolved in an *inter partes* reexamination proceeding. If such issues are raised by the patent owner or the third-party requester during a reexamination proceeding, the existence of such issues will be noted by the examiner in the next Office action, in which case the patent owner may desire to consider the advisability of filing a reissue application to have such issues considered and resolved.

§ 1.907 *Inter partes* reexamination prohibited.

(a) Once an order to reexamine has been issued under § 1.931, neither the third-party requester, nor its privies, may file a subsequent request for *inter partes* reexamination of the patent until an *inter partes* reexamination certificate is issued under § 1.997, unless authorized by the Director.

(b) Once a final decision has been entered against a party in a civil action arising in whole or in part under 28 U.S.C. 1338 that the party has not sustained its burden of proving invalidity of any patent claim in suit, then neither that party nor its privies may thereafter request *inter partes* reexamination of any such patent claim on the basis of issues which that party, or its privies, raised or could have raised in such civil action, and an *inter partes* reexamination requested by that party, or its privies, on the basis of such issues may not thereafter be maintained by the Office.

(c) If a final decision in an *inter partes* reexamination proceeding instituted by a third-party requester is favorable to patentability of any original, proposed amended, or new claims of the patent, then neither that party nor its privies may thereafter request *inter partes* reexamination of any such patent claims on the basis of issues which that party, or its privies, raised or could have raised in such *inter partes* reexamination proceeding.

§ 1.913 Persons eligible to file request for *inter partes* reexamination.

Except as provided for in § 1.907, any person other than the patent owner or its privies may, at any time during the period of enforceability of a patent which issued from an original application filed in the United States on or after November 29, 1999, file a request for *inter partes* reexamination by the Office of any claim of the patent on the basis of prior art patents or printed publications cited under § 1.501.

§ 1.915 Content of request for *inter partes* reexamination.

(a) The request must be accompanied by the fee for requesting *inter partes* reexamination set in § 1.20(c)(2).

(b) A request for *inter partes* reexamination must include the following parts:

(1) An identification of the patent by patent number and every claim for which reexamination is requested.

(2) A citation of the patents and printed publications which are presented to provide a substantial new question of patentability.

(3) A statement pointing out each substantial new question of patentability based on the cited patents and printed publications, and a detailed explanation of the pertinency and manner of applying the patents and printed publications to every claim for which reexamination is requested.

(4) A copy of every patent or printed publication relied upon or referred to in paragraphs (b)(1)–(3) of this section, accompanied by an English language translation of all the necessary and pertinent parts of any non-English language document.

(5) A copy of the entire patent including the front face, drawings, and specification/claims (in double column format) for which reexamination is requested, and a copy of any disclaimer, certificate of correction, or reexamination certificate issued in the patent. All copies must have each page plainly written on only one side of a sheet of paper.

(6) A certification by the third-party requester that a copy of the request has been served in its entirety on the patent owner at the address as provided for in § 1.33(c). The name and address of the party served must be indicated. If service was not possible, a duplicate copy of the request must be supplied to the Office.

(7) A certification by the third-party requester that the estoppel provisions of § 1.907 do not prohibit the *inter partes* reexamination.

(8) A statement identifying the real party in interest to the extent necessary for a subsequent person filing an *inter partes* reexamination request to determine whether that person is a privy.

(c) If an *inter partes* request is filed by an attorney or agent identifying another party on whose behalf the request is being filed, the attorney or agent must

have a power of attorney from that party or be acting in a representative capacity pursuant to § 1.34(a).

(d) If the *inter partes* request does not meet all the requirements of § 1.915(b), the person identified as requesting *inter partes* reexamination may be so notified and given an opportunity to complete the formal requirements of the request within a specified time. Failure to comply with the notice may result in the *inter partes* reexamination proceeding being vacated.

§ 1.919 Filing date of request for *inter partes* reexamination.

(a) The filing date of a request for *inter partes* reexamination is the date on which the request satisfies the fee requirement of § 1.915(a).

(b) If the request is not granted a filing date, the request will be placed in the patent file as a citation of prior art if it complies with the requirements of § 1.501.

§ 1.923 Examiner's determination on the request for *inter partes* reexamination.

Within three months following the filing date of a request for *inter partes* reexamination under § 1.919, the examiner will consider the request and determine whether or not a substantial new question of patentability affecting any claim of the patent is raised by the request and the prior art citation. The examiner's determination will be based on the claims in effect at the time of the determination and will become a part of the official file of the patent and will be mailed to the patent owner at the address as provided for in § 1.33(c) and to the third-party requester. If the examiner determines that no substantial new question of patentability is present, the examiner shall refuse the request and shall not order *inter partes* reexamination.

§ 1.925 Partial refund if request for *inter partes* reexamination is not ordered.

Where *inter partes* reexamination is not ordered, a refund of a portion of the fee for requesting *inter partes* reexamination will be made to the requester in accordance with § 1.26(c).

§ 1.927 Petition to review refusal to order *inter partes* reexamination.

The third-party requester may seek review by a petition to the Director under § 1.181 within one month of the mailing date of the examiner's determination refusing to order *inter partes* reexamination. Any such petition must comply with § 1.181(b). If no petition is timely filed, or if the decision on petition affirms that no substantial new question of patentability has been raised, the determination shall be final and nonappealable.

Inter Partes Reexamination of Patents

§ 1.931 Order for *inter partes* reexamination.

(a) If a substantial new question of patentability is found, the determination will include an order for *inter partes* reexamination of the patent for resolution of the question.

(b) If the order for *inter partes* reexamination resulted from a petition pursuant to § 1.927, the *inter partes* reexamination will ordinarily be conducted by an examiner other than the examiner responsible for the initial determination under § 1.923.

Information Disclosure in *inter partes* Reexamination

§ 1.933 Patent owner duty of disclosure in *inter partes* reexamination proceedings.

(a) Each individual associated with the patent owner in an *inter partes* reexamination proceeding has a duty of candor and good faith in dealing with the Office, which includes a duty to disclose to the Office all information known to that individual to be material to patentability in a reexamination proceeding as set forth in § 1.555(a) and (b). The duty to disclose all information known to be material to patentability in an *inter partes* reexamination proceeding is deemed to be satisfied by filing a paper in compliance with the requirements set forth in § 1.555(a) and (b).

(b) The responsibility for compliance with this section rests upon the individuals designated in paragraph (a) of this section, and no evaluation will be made by the Office in the reexamination proceeding as to compliance with this section. If questions of compliance with this section are discovered during a reexamination proceeding, they will be noted as unresolved questions in accordance with § 1.906(c).

Office Actions and Responses (Before the Examiner) in *inter partes* Reexamination

§ 1.935 Initial Office action usually accompanies order for *inter partes* reexamination.

The order for *inter partes* reexamination will usually be accompanied by the initial Office action on the merits of the reexamination.

§ 1.937 Conduct of *inter partes* reexamination.

(a) All *inter partes* reexamination proceedings, including any appeals to the Board of Patent Appeals and Interferences, will be conducted with special dispatch within the Office, unless the Director makes a determination that there is good cause for suspending the reexamination proceeding.

(b) The *inter partes* reexamination proceeding will be conducted in accordance with §§ 1.104 through 1.116, the sections governing the application examination process, and will result in the issuance of an *inter partes* reexamination certificate under § 1.997, except as otherwise provided.

(c) All communications between the Office and the parties to the *inter partes* reexamination which are directed to the merits of the proceeding must be in writing and filed with the Office for entry into the record of the proceeding.

§ 1.939 Unauthorized papers in *inter partes* reexamination.

(a) If an unauthorized paper is filed by any party at any time during the *inter partes* reexamination proceeding it will not be considered and may be returned.

(b) Unless otherwise authorized, no paper shall be filed prior to the initial Office action on the merits of the *inter partes* reexamination.

§ 1.941 Amendments by patent owner in *inter partes* reexamination.

Amendments by patent owner in *inter partes* reexamination proceedings are made by filing a paper in compliance with §§ 1.530(d) and 1.943.

§ 1.943 Requirements of responses, written comments, and briefs in *inter partes* reexamination.

(a) The form of responses, written comments, briefs, appendices, and other papers must be in accordance with the requirements of § 1.530(d)(5).

(b) Responses by the patent owner and written comments by the third-party requester shall not exceed 50 pages in length, excluding amendments, appendices of claims, and reference materials such as prior art references.

(c) Appellant briefs by the patent owner and the third-party requester shall not exceed 30 pages or 14,000 words in length, excluding appendices of claims and reference materials such as prior art references. All other briefs by any party shall not exceed 15 pages in length or 7,000 words. If the page limit for any brief is exceeded, a certificate is required stating the number of words contained in the brief.

§ 1.945 Response to Office action by patent owner in *inter partes* reexamination.

The patent owner will be given at least 30 days to file a response to any Office action on the merits of the *inter partes* reexamination.

§ 1.947 Comments by third-party requester to patent owner's response in *inter partes* reexamination.

Each time the patent owner files a response to an Office action on the merits, a third-party requester may once file written comments within a period of 30 days from the date of service of the patent owner's response. These comments shall be limited to issues raised by the Office action or the patent owner's response. The time for submitting comments by the third-party requester may not be extended.

§ 1.948 Limitations on submission of prior art by third-party requester following the order for *inter partes* reexamination.

After the *inter partes* reexamination order, the third-party requester may only cite additional prior art as defined under § 1.501 if it is filed as part of a comments submission under §§ 1.947, 1.951(a) and 1.951(d), and is limited to prior art:

(a) Which is necessary to rebut a finding of fact by the examiner;

(b) Which is necessary to rebut a response of the patent owner; or,

(c) Which became known or available to the third-party requester after the filing of the request for *inter partes* reexamination proceeding where a discussion of the pertinency of each reference to the patentability of at least one claim is included. Prior art submitted under this paragraph (c) must be accompanied by a statement as to when the prior art first became known or available to the third-party requester.

§ 1.949 Examiner's Office action closing prosecution in *inter partes* reexamination.

Upon consideration of the issues a second or subsequent time, or upon allowance of all claims, the examiner shall issue an Office action treating all claims present in the *inter partes* reexamination, which may be an action closing prosecution. The Office action shall set forth all rejections and determinations not to make a proposed rejection, and the grounds therefor. An Office action will not usually close prosecution if it includes a new ground of rejection which was not previously addressed by the patent owner, unless the new ground was necessitated by an amendment.

§ 1.951 Options after Office action closing prosecution in *inter partes* reexamination.

(a) After an action closing prosecution in an *inter partes* reexamination, a third-party requester may once file comments limited to the issues raised in the Office action closing prosecution. Such comments must be filed within the time set for response in the Office action closing prosecution.

(b) When a third-party requester does file comments, the patent owner may once file comments responsive to the third-party requester's comments within 30 days from the date of service of the third-party requester's comments on the patent owner.

(c) After an Office action closing prosecution in an *inter partes* reexamination, the patent owner may once file comments limited to the issues raised in the Office action closing prosecution. The comments can include a proposed amendment to the claims, which amendment will be subject to the criteria of § 1.116 as to whether or not it shall be admitted. The comments must be filed within the time set for response in the Office action closing prosecution.

(d) When the patent owner does file comments, a third-party requester may once file comments responsive to the patent owner's comments within 30 days from the date of service of patent owner's comments on the third-party requester.

§ 1.953 Examiner's Right of Appeal Notice in *inter partes* reexamination.

(a) Upon considering the comments of the patent owner and the third-party requester subsequent to the Office action closing prosecution in an *inter partes* reexamination, or upon expiration of the time for submitting such comments, the examiner shall issue a Right of Appeal Notice, unless the examiner reopens prosecution and issues another Office action on the merits.

(b) Expedited Right of Appeal Notice: At any time after the patent owner's response to the initial Office action on the merits in an *inter partes* reexamination, the patent owner and all third-party requesters may stipulate that the issues are appropriate for a final action, which would include a final rejection and/or a final determination favorable to patentability, and may request the issuance of a Right of Appeal Notice. The request must have the concurrence of the patent owner and all third-party requesters present in the proceeding and must identify all the appealable issues, and the positions of the patent owner and all third-party requesters on those issues. If the examiner determines that no other issues are present or should be raised, a Right of Appeal Notice limited to the identified issues shall be issued. Any appeal by the parties shall be conducted in accordance with §§ 1.959–1.983.

(c) The Right of Appeal Notice shall be a final action, which includes a final rejection setting forth each ground of rejection and/or final decision favorable to patentability including each determination not to make a proposed rejection, an identification of the status of each claim, and the reasons for decisions favorable to patentability and/or the grounds of rejection for each claim. No amendment can be made in response to the Right of Appeal Notice. The Right of Appeal Notice shall set a one-month time period for either party to appeal. If no notice of appeal is filed, the *inter partes* reexamination proceeding will be terminated, and the Director will proceed to issue a certificate under § 1.997 in accordance with the Right of Appeal Notice.

Interviews Prohibited in *Inter Partes* Reexamination

§ 1.955 Interviews prohibited in *inter partes* reexamination proceedings.

There will not be any interviews in an *inter partes* reexamination proceeding which discuss the merits of the proceeding.

EXTENSIONS OF TIME, TERMINATION OF PROCEEDINGS, AND PETITIONS TO REVIVE IN *inter partes* REEXAMINATION

§ 1.956 Patent owner extensions of time in *inter partes* reexamination.

The time for taking any action by a patent owner in an *inter partes* reexamination proceeding will be extended only for sufficient cause and for a reasonable time specified. Any request for such extension must be filed on or before the day on which action by the patent owner is due, but in no case will the mere filing of a request effect any extension. See § 1.304(a) for extensions of time for filing a notice of appeal to the U.S. Court of Appeals for the Federal Circuit.

§ 1.957 Failure to file a timely, appropriate or complete response or comment in *inter partes* reexamination.

(a) If the third-party requester files an untimely or inappropriate comment, notice of appeal or brief in an *inter partes* reexamination, the paper will be refused consideration.

(b) If no claims are found patentable, and the patent owner fails to file a timely and appropriate response in an *inter partes* reexamination proceeding, the reexamination proceeding will be terminated and the Director will proceed to issue a certificate under § 1.997 in accordance with the last action of the Office.

(c) If claims are found patentable, and the patent owner fails to file a timely and appropriate response to any Office action in an *inter partes* reexamination proceeding, further prosecution will be limited to the claims found patentable at

the time of the failure to respond, and to any claims added thereafter which do not expand the scope of the claims which were found patentable at that time.

(d) When action by the patent owner is a *bona fide* attempt to respond and to advance the prosecution, and is substantially a complete response to the Office action, but consideration of some matter or compliance with some requirement has been inadvertently omitted, an opportunity to explain and supply the omission may be given.

§ 1.958 Petition to revive terminated *inter partes* reexamination or claims terminated for lack of patent owner response.

(a) If a response by the patent owner is not timely filed in the Office, the delay in filing such response may be excused if it is shown to the satisfaction of the Director that the delay was unavoidable. A petition to accept an unavoidably delayed response must be filed in compliance with § 1.137(a).

(b) Any response by the patent owner not timely filed in the Office may nevertheless be accepted if the delay was unintentional. A petition to accept an unintentionally delayed response must be filed in compliance with § 1.137(b).

Appeal to the Board of Patent Appeals and Interferences in *Inter Partes* Reexamination

§ 1.959 Notice of appeal and cross appeal to Board of Patent Appeals and Interferences in *inter partes* reexamination.

(a)(1) Upon the issuance of a Right of Appeal Notice under § 1.953, the patent owner involved in an *inter partes* reexamination proceeding may appeal to the Board of Patent Appeals and Interferences with respect to the final rejection of any claim of the patent by filing a notice of appeal within the time provided in the Right of Appeal Notice and paying the fee set forth in § 1.17(b).

(2) Upon the issuance of a Right of Appeal Notice under § 1.953, a third-party requester involved in an *inter partes* reexamination proceeding may appeal to the Board of Patent Appeals and Interferences with respect to any final decision favorable to the patentability, including any final determination not to make a proposed rejection, of any original or proposed amended or new claim of the patent by filing a notice of appeal within the time provided in the Right of Appeal Notice and paying the fee set forth in § 1.17(b).

(b)(1) Within fourteen days of service of a third-party requester's notice of appeal under paragraph (a)(2) of this section, and upon payment of the fee set forth in § 1.17(b), a patent owner who has not filed a notice of appeal may file a notice of cross appeal with respect to the final rejection of any claim of the patent.

(2) Within fourteen days of service of a patent owner's notice of appeal under paragraph (a)(1) of this section, and upon payment of the fee set forth in § 1.17(b), a third-party requester who has not filed a notice of appeal may file a notice of cross appeal with respect to any final decision favorable to the patentability, including any final determination not to make a proposed rejection, of any original or proposed amended or new claim of the patent.

(c) The notice of appeal or cross appeal in an *inter partes* reexamination proceeding must identify the claim(s) with respect to which an appeal is being taken, and must be signed by the patent owner or third-party requester, or their duly authorized attorney or agent.

(d) An appeal or cross appeal when taken must be taken from all the rejections of the claims under rejection in a Right of Appeal Notice which the patent owner proposes to contest, or from all the determinations favorable to patentability, including any final determination not to make a proposed rejection, in a Right of Appeal Notice which a third-party requester proposes to contest. Questions relating to matters not affecting the merits of the invention may be required to be settled before an appeal is decided.

(e) The times for filing a notice of appeal or cross-appeal may not be extended.

§ 1.961 Jurisdiction over appeal in *inter partes* reexamination.

Jurisdiction over the *inter partes* reexamination proceeding passes to the Board of Patent Appeals and Interferences upon transmittal of the file, including all briefs and examiner's answers, to the Board of Patent Appeals and Interferences. Prior to the entry of a decision on the appeal, the Director may sua sponte order the *inter partes* reexamination proceeding remanded to the examiner, for action consistent with the Director's order.

§ 1.962 Appellant and respondent in *inter partes* reexamination defined.

For the purposes of *inter partes* reexamination, appellant is any party, whether the patent owner or a third-party requester, filing a notice of appeal or cross appeal. If more than one party appeals or cross appeals, each appealing or cross appealing party is an appellant with respect to the claims to which his or her appeal or cross appeal is directed. A respondent is any third-party requester responding under § 1.967 to the appellant brief of the patent owner, or the patent owner responding under § 1.967 to the appellant brief of any third-party requester. No third-party requester may be a respondent to the appellant brief of any other third-party requester.

§ 1.963 Time for filing briefs in *inter partes* reexamination.

(a) An appellant brief in an *inter partes* reexamination must be filed no later than two months from the latest of the filing date of the last-filed notice of appeal or cross appeal or if any party to the *inter partes* reexamination is entitled to file an appeal or cross appeal but fails to timely do so, the expiration of time for filing (by the last party entitled to do so) such notice of appeal or cross appeal. The time for filing an appellant brief may not be extended.

(b) Once an appellant brief has been properly filed, any respondent brief must be filed within one month from the date of service of the appellant brief. The time for filing a respondent brief may not be extended.

(c) The examiner will consider both the appellant and respondent briefs and may prepare an examiner's answer under § 1.969.

(d) Any appellant may file a rebuttal brief under § 1.971 within one month of the date of the examiner's answer. The time for filing a rebuttal brief may not be extended.

(e) No further submission will be considered and any such submission will be treated in accordance with § 1.939.

§ 1.965 Appellant brief in *inter partes* reexamination.

(a) Appellant(s) may once, within time limits for filing set forth in § 1.963, file a brief in triplicate and serve the brief on all other parties to the *inter partes* reexamination proceeding in accordance with § 1.903. The brief must be signed by the appellant, or the appellant's duly authorized attorney or agent, and must be accompanied by the requisite fee set forth in § 1.17(c). The brief must set forth the authorities and arguments on which appellant will rely to maintain the appeal. Any arguments or authorities not included in the brief will be refused consideration by the Board of Patent Appeals and Interferences, unless good cause is shown.

(b) On failure of a party to file an appellant brief, accompanied by the requisite fee, within the time allowed, that party's appeal shall stand dismissed.

(c) The appellant brief shall contain the following items under appropriate

headings and in the order indicated below, unless the brief is filed by a party who is not represented by a registered practitioner. The brief may include an appendix containing only those portions of the record on which reliance has been made.

(1) *Real Party in Interest.* A statement identifying the real party in interest.

(2) *Related Appeals and Interferences.* A statement identifying by number and filing date all other appeals or interferences known to the appellant, the appellant's legal representative, or assignee which will directly affect or be directly affected by or have a bearing on the decision of the Board of Patent Appeals and Interferences in the pending appeal.

(3) *Status of Claims.* A statement of the status of all the claims, pending or canceled. If the appellant is the patent owner, the appellant must also identify the rejected claims whose rejection is being appealed. If the appellant is a third-party requester, the appellant must identify the claims that the examiner has made a determination favorable to patentability, which determination is being appealed.

(4) *Status of Amendments.* A statement of the status of any amendment filed subsequent to the close of prosecution.

(5) *Summary of Invention.* A concise explanation of the invention or subject matter defined in the claims involved in the appeal, which shall refer to the specification by column and line number, and to the drawing(s), if any, by reference characters.

(6) *Issues.* A concise statement of the issues presented for review. No new ground of rejection can be proposed by a third-party requester appellant.

(7) *Grouping of Claims.* If the appellant is the patent owner, for each ground of rejection in the right of appeal notice which appellant contests and which applies to a group of two or more claims, the Board of Patent Appeals and Interferences shall select a single claim from the group and shall decide the appeal as to the ground of rejection on the basis of that claim alone unless a statement is included that the claims of the group do not stand or fall together and, in the argument under paragraph (c)(8) of this section, appellant explains why the claims of this group are believed to be separately patentable. Merely pointing out differences in what the claims cover is not an argument as to why the claims are separately patentable.

(8) *Argument.* The contentions of appellant with respect to each of the issues presented for review in paragraph (c)(6) of this section, and the bases therefor, with citations of the authorities, statutes, and parts of the record relied on. Each issue should be treated under a separate, numbered heading.

(i) For each rejection under 35 U.S.C. 112, first paragraph, or for each determination favorable to patentability including a determination not to make a proposed rejection under 35 U.S.C. 112, first paragraph, which appellant contests, the argument shall specify the errors in the rejection or the determination and how the first paragraph of 35 U.S.C. 112 is complied with, if the appellant is the patent owner, or is not complied with, if the appellant is a third-party requester, including, as appropriate, how the specification and drawing(s), if any,

(A) Describe, if the appellant is the patent owner, or fail to describe, if the appellant is a third-party requester, the subject matter defined by each of the appealed claims, and

(B) Enable, if the appellant is the patent owner, or fail to enable, if the appellant is a third-party requester, any person skilled in the art to make and use the subject matter defined by each of the appealed claims, and

(ii) For each rejection under 35 U.S.C. 112, second paragraph, or for each determination favorable to patentability including a determination not to make a proposed rejection under 35 U.S.C. 112, second paragraph, which appellant contests, the argument shall specify the errors in the rejection, if the appellant is the patent owner, or the determination, if the appellant is a third-party requester, and how the claims do, if the appellant is the patent owner, or do not, if the appellant is a third-party requester, particularly point out and distinctly claim the subject matter which the inventors regard as the invention.

(iii) For each rejection under 35 U.S.C. 102 or for each determination favorable to patentability including a determination not to make a proposed rejection under 35 U.S.C. 102 which appellant contests, the argument shall specify the errors in the rejection, if the appellant is the patent owner, or determination, if the appellant is a third-party requester, and why the appealed claims are, if the appellant is the patent owner, or are not, if the appellant is a third-party requester, patentable under 35 U.S.C. 102, including any specific limitations in the appealed claims which are or are not described in the prior art.

(iv) For each rejection under 35 U.S.C. 103 or for each determination favorable to patentability including a determination not to make a proposed rejection under 35 U.S.C. 103 which appellant contests, the argument shall specify the errors in the rejection, if the appellant is the patent owner, or determination, if the appellant is a third-party requester, and, if appropriate, the specific limitations in the appealed claims which are or are not described in the prior art, and shall explain how such limitations render the claimed subject matter obvious, if the appellant is a third-party requester, or unobvious, if the appellant is the patent owner, over the prior art. If the rejection or determination is based upon a combination of references, the argument shall explain why the references, taken as a whole, do or do not suggest the claimed subject matter, and shall include, as may be appropriate, an explanation of why features disclosed in one reference may or may not properly be combined with features disclosed in another reference. A general argument that all the limitations are or are not described in a single reference does not satisfy the requirements of this paragraph.

(v) For any rejection other than those referred to in paragraphs (c)(8)(i) to (iv) of this section or for each determination favorable to patentability including any determination not to make a proposed rejection other than those referred to in paragraphs (c)(8)(i) to (iv) of this section which appellant contests, the argument shall specify the errors in the rejection, if the appellant is the patent owner, or determination, if the appellant is a third-party requester, and the specific limitations in the appealed claims, if appropriate, or other reasons, which cause the rejection or determination to be in error.

(9) *Appendix.* An appendix containing a copy of the claims appealed by the appellant.

(10) *Certificate of Service.* A certification that a copy of the brief has been served in its entirety on all other parties to the reexamination proceeding. The names and addresses of the parties served must be indicated.

(d) If a brief is filed which does not comply with all the requirements of paragraph (c) of this section, appellant will be notified of the reasons for non-compliance and provided with a non-extendable period of one month within which to file an amended brief. If the appellant does not file an amended brief during the one-month period, or files an amended brief which does not overcome all the reasons for non-compliance stated in the notification, that appellant's appeal will stand dismissed.

§ 1.967 Respondent brief in *inter partes* reexamination.

(a) Respondent(s) in an *inter partes* reexamination appeal may once, within time limit for filing set forth in § 1.963, file a respondent brief in triplicate and serve the brief on all parties in accordance with § 1.903. The brief must be signed by the party, or the party's duly authorized attorney or agent, and must be accompanied by the requisite fee set forth in § 1.17(c). The brief must set forth the authorities and arguments on which respondent will rely. Any arguments or authorities not included in the brief will be refused consideration by the Board of Patent Appeals and Interferences, unless good cause is shown. The respondent brief shall be limited to issues raised in the appellant brief to which the respondent brief is directed. A third-party respondent brief may not address any brief of any other third-party.

(b) The respondent brief shall contain the following items under appropriate headings and in the order here indicated, and may include an appendix containing only those portions of the record on which reliance has been made.

(1) *Real Party in Interest.* A statement identifying the real party in interest.

(2) *Related Appeals and Interferences.* A statement identifying by number and filing date all other appeals or interferences known to the respondent, the respondent's legal representative, or assignee (if any) which will directly affect or be directly affected by or have a bearing on the decision of the Board of Patent Appeals and Interferences in the pending appeal.

(3) *Status of claims.* A statement accepting or disputing appellant's statement of the status of claims. If appellant's statement of the status of claims is disputed, the errors in appellant's statement must be specified with particularity.

(4) *Status of amendments.* A statement accepting or disputing appellant's statement of the status of amendments. If appellant's statement of the status of amendments is disputed, the errors in appellant's statement must be specified with particularity.

(5) *Summary of invention.* A statement accepting or disputing appellant's summary of the invention or subject matter defined in the claims involved in the appeal. If appellant's summary of the invention or subject matter defined in the claims involved in the appeal is disputed, the errors in appellant's summary must be specified with particularity.

(6) *Issues.* A statement accepting or disputing appellant's statement of the issues presented for review. If appellant's statement of the issues presented for review is disputed, the errors in appellant's statement must be specified with particularity. A counter statement of the issues for review may be made. No new ground of rejection can be proposed by a third-party requester respondent.

(7) *Argument.* A statement accepting or disputing the contentions of the appellant with each of the issues. If a contention of the appellant is disputed, the errors in appellant's argument must be specified with particularity, stating the basis therefor, with citations of the authorities, statutes and parts of the record relied on. Each issue should be treated under a separate heading. An argument may be made with each of the issues stated in the counter statement of the issues, with each counter-stated issue being treated under a separate heading. The provisions of §§ 1.965(c)(8)(iii) and (iv) shall apply to any argument raised under 35 U.S.C. 102 or 103.

(8) *Certificate of Service.* A certification that a copy of the respondent brief has been served in its entirety on all other parties to the reexamination proceeding. The names and addresses of the parties served must be indicated.

(c) If a respondent brief is filed which does not comply with all the requirements of paragraph (b) of this section, respondent will be notified of the reasons for non-compliance and provided with a non-extendable period of one month within which to file an amended brief. If the respondent does not file an amended brief during the one-month period, or files an amended brief which does not overcome all the reasons for non-compliance stated in the notification, the respondent brief will not be considered.

§ 1.969 Examiner's answer in *inter partes* reexamination.

(a) The primary examiner in an *inter partes* reexamination appeal may, within such time as directed by the Director, furnish a written statement in answer to the patent owner's and/or third-party requester's appellant brief or respondent brief including, as may be necessary, such explanation of the invention claimed and of the references, the grounds of rejection, and the reasons for patentability including grounds for not adopting a proposed rejection. A copy of the answer shall be supplied to all parties to the reexamination proceeding. If the primary examiner finds that the appeal is not regular in form or does not relate to an appealable action, he or she shall so state.

(b) An examiner's answer may not include a new ground of rejection.

(c) Where a third-party requester is a party to the appeal, an examiner's answer may not include a new determination not to make a proposed rejection of a claim.

§ 1.971 Rebuttal brief in *inter partes* reexamination.

Within one month of the examiner's answer in an *inter partes* reexamination appeal, any appellant may once file a rebuttal brief in triplicate. The rebuttal brief of the patent owner may be directed to the examiner's answer and/or any respondent brief. The rebuttal brief of any third-party requester may be directed to the examiner's answer and/or the respondent brief of the patent owner. The rebuttal brief of a third-party requester may not be directed to the respondent brief of any other third-party requester. No new ground of rejection can be proposed by a third-party requester appellant. The time for filing a rebuttal brief may not be extended. The rebuttal brief must include a certification that a copy of the rebuttal brief has been served in its entirety on all other parties to the reexamination proceeding. The names and addresses of the parties served must be indicated.

§ 1.973 Oral hearing in *inter partes* reexamination.

(a) An oral hearing in an *inter partes* reexamination appeal should be requested only in those circumstances in which an appellant or a respondent considers such a hearing necessary or desirable for a proper presentation of the appeal. An appeal decided without an oral hearing will receive the same consideration by the Board of Patent Appeals and Interferences as an appeal decided after oral hearing.

(b) If an appellant or a respondent desires an oral hearing, he or she must file a written request for such hearing accompanied by the fee set forth in § 1.17(d) within two months after the date of the examiner's answer. The time for requesting an oral hearing may not be extended.

(c) An oral argument may be presented at oral hearing by, or on behalf of, the primary examiner if considered desirable by either the primary examiner or the Board of Patent Appeals and Interferences.

(d) If an appellant or a respondent has requested an oral hearing and has submitted the fee set forth in § 1.17(d), a hearing date will be set, and notice given to all parties to the reexamination proceeding, and to the primary examiner. The notice shall set a period within which all requests for oral

hearing shall be submitted by any other party to the appeal desiring to participate in the oral hearing, which period will not be extended. A hearing will be held as stated in the notice, and oral argument will be limited to thirty minutes for each appellant and respondent who has requested an oral hearing, and twenty minutes for the primary examiner unless otherwise ordered before the hearing begins. No appellant or respondent will be permitted to participate in an oral hearing unless he or she has requested an oral hearing and submitted the fee set forth in § 1.17(d).

(e) If no request and fee for oral hearing have been timely filed by an appellant or a respondent, the appeal will be assigned for consideration and decision on the written record.

§ 1.975 Affidavits or declarations after appeal in *inter partes* reexamination.

Affidavits, declarations, or exhibits submitted after the *inter partes* reexamination has been appealed will not be admitted without a showing of good and sufficient reasons why they were not earlier presented.

§ 1.977 Decision by the Board of Patent Appeals and Interferences; remand to examiner in *inter partes* reexamination.

(a) The Board of Patent Appeals and Interferences, in its decision, may affirm or reverse each decision of the examiner on all issues raised on each appealed claim, or remand the reexamination proceeding to the examiner for further consideration. The reversal of the examiner's determination not to make a rejection proposed by the third-party requester constitutes a decision adverse to the patentability of the claims which are subject to that proposed rejection which will be set forth in the decision of the Board of Patent Appeals and Interferences as a new ground of rejection under paragraph (b) of this section. The affirmance of the rejection of a claim on any of the grounds specified constitutes a general affirmance of the decision of the examiner on that claim, except as to any ground specifically reversed.

(b) Should the Board of Patent Appeals and Interferences have knowledge of any grounds not raised in the appeal for rejecting any pending claim, it may include in the decision a statement to that effect with its reasons for so holding, which statement shall constitute a new ground of rejection of the claim. A decision which includes a new ground of rejection shall not be considered final for purposes of judicial review. When the Board of Patent Appeals and Interferences makes a new ground of rejection, the patent owner, within one month from the date of the decision, must exercise one of the following two options with respect to the new ground of rejection to avoid termination of the appeal proceeding as to the rejected claim:

(1) The patent owner may submit an appropriate amendment of the claim so rejected or a showing of facts relating to the claim, or both. The reexamination proceeding will be remanded to the examiner for consideration. The statement of the Board of Patent Appeals and Interferences shall be binding upon the examiner unless an amendment or showing of facts not previously of record be made which, in the opinion of the examiner, overcomes the new ground of rejection.

(2) The patent owner may file a request for rehearing of the decision of the Board of Patent Appeals and Interferences under § 1.979(a).

(c) The Board of Patent Appeals and Interferences, in its decision, may include an explicit statement that a claim may be allowed in amended form. The decision shall not be considered a final decision for purposes of judicial review if the patent owner, within one month of the date of the decision, submits an appropriate amendment of the claim in conformity with such statement, in which event the reexamination proceeding will be remanded to the examiner. The statement shall be binding on the examiner in the absence of new references or new grounds of rejection.

(d) Where the patent owner has responded under paragraph (b)(1) or (c) of this section, any third-party requester, within one month of the date of service of the patent owner response, may once file comments on the response. Such written comments must be limited to the issues raised by the decision of the Board of Patent Appeals and Interferences and the patent owner's response. Any third-party requester that had not previously filed an appeal or cross appeal and is seeking under this subsection to file comments or a reply to the comments is subject to the appeal and brief fees under §§ 1.17(b) and (c), respectively, which must accompany the comments or reply.

(e) Following any response by the patent owner under paragraph (b)(1) or (c) of this section and any written comments from a third-party requester under paragraph (d) of this section, the reexamination proceeding will be remanded to the examiner. The examiner will consider any response under paragraph (b)(1) or (c) of this section and any written comments by a third-party requester under paragraph (d) of this section and issue a determination that the rejection should be maintained or has been overcome.

(f) Within one month of the examiner's determination pursuant to paragraph (e) of this section, the patent owner or any third-party requester may once submit comments in response to the examiner's determination. Within one month of the date of service of comments in response to the examiner's determination, any party may file a reply to the comments. Any third-party requester that had not previously filed an appeal or cross appeal and is seeking under this subsection to file comments or a reply to the comments is subject to the appeal and brief fees under §§ 1.17(b) and (c), respectively, which must accompany the comments or reply.

(g) After submission of any comments and any reply pursuant to paragraph (f) of this section, or after time has expired therefor, the reexamination proceeding will be returned to the Board of Patent Appeals and Interferences which shall reconsider the matter and issue a new decision. The new decision is deemed to incorporate the earlier decision, except for those portions specifically withdrawn.

(h) The time periods set forth in paragraphs (b) and (c) of this section are subject to the extension of time provisions of § 1.956. The time periods set forth in subsections (d) and (f) may not be extended.

§ 1.979 Action following decision by the Board of Patent Appeals and Interferences or dismissal of appeal in *inter partes* reexamination.

(a) Parties to the appeal may file a request for rehearing of the decision within one month of the date of:

(1) The original decision of the Board of Patent Appeals and Interferences under § 1.977(a),

(2) The original § 1.977(b) decision under the provisions of § 1.977(b)(2),

(3) The expiration of the time for the patent owner to take action under § 1.977(b)(2) or (c), or

(4) The new decision of the Board of Patent Appeals and Interferences under § 1.977(g).

(b) Within one month of the date of service of any request for rehearing under paragraph (a) of this section, or any further request for rehearing under paragraph (c) of this section, any party to the appeal may once file comments in opposition to the request for rehearing or the further request for rehearing. The comments in opposition must be limited to the issues raised in the request for rehearing or the further request for rehearing.

(c) If a party to an appeal files a request for rehearing under paragraph

(a) of this section, or a further request for rehearing under this section, the Board of Patent Appeals and Interferences will issue a decision on rehearing which decision is deemed to incorporate the earlier decision, except for those portions specifically withdrawn. If the decision on rehearing becomes, in effect, a new decision, and the Board of Patent Appeals and Interferences so states, then any party to the appeal may, within one month of the new decision, once file a further request for rehearing of the new decision under this subsection.

(d) Any request for rehearing shall state with particularity the points believed to have been misapprehended or overlooked in rendering the decision and also state all other grounds upon which rehearing is sought.

(e) The patent owner may not appeal to the U.S. Court of Appeals for the Federal Circuit under § 1.983 until all parties' rights to request rehearing have been exhausted, at which time the decision of the Board of Patent Appeals and Interferences is final and appealable by the patent owner.

(f) An appeal by a third-party requester is considered terminated by the dismissal of the third-party requester's appeal, the failure of the third-party requester to timely request rehearing under §§ 1.979(a) or (c), or a final decision under § 1.979(e). The date of such termination is the date on which the appeal is dismissed, the date on which the time for rehearing expires, or the decision of the Board of Patent Appeals and Interferences is final. An appeal by the patent owner is considered terminated by the dismissal of the patent owner's appeal, the failure of the patent owner to timely request rehearing under §§ 1.979(a) or (c), or the failure of the patent owner to timely file an appeal to the U.S. Court of Appeals for the Federal Circuit under § 1.983. The date of such termination is the date on which the appeal is dismissed, the date on which the time for rehearing expires, or the date on which the time for the patent owner's appeal to the U.S. Court of Appeals for the Federal Circuit expires. If an appeal to the U.S. Court of Appeals for the Federal Circuit has been filed, the patent owner's appeal is considered terminated when the mandate is received by the Office. Upon termination of an appeal, if no other appeal is present, the reexamination proceeding will be terminated and the Director will issue a certificate under § 1.997.

(g) The times for requesting rehearing under paragraph (a) of this section, for requesting further rehearing under paragraph (c) of this section, and for submitting comments under paragraph (b) of this section may not be extended.

§ 1.981 Reopening after decision by the Board of Patent Appeals and Interferences in *inter partes* reexamination.

Cases which have been decided by the Board of Patent Appeals and Interferences will not be reopened or reconsidered by the primary examiner except under the provisions of § 1.977 without the written authority of the Director, and then only for the consideration of matters not already adjudicated, sufficient cause being shown.

Patent Owner Appeal to the United States Court of Appeals for the Federal Circuit in *inter partes* Reexamination

§ 1.983 Patent owner appeal to the United States Court of Appeals for the Federal Circuit in *inter partes* reexamination.

The patent owner in a reexamination proceeding who is dissatisfied with the decision of the Board of Patent Appeals and Interferences may, subject to § 1.979(e), appeal to the U.S. Court of Appeals for the Federal Circuit. The appellant must take the following steps in such an appeal:

(1) In the U. S. Patent and Trademark Office file a timely written notice of appeal directed to the Director in accordance with §§ 1.302 and 1.304; and

(2) In the Court, file a copy of the notice of appeal and pay the fee, as provided for in the rules of the Court.

Concurrent Proceedings Involving Same Patent in *inter partes* Reexamination

§ 1.985 Notification of prior or concurrent proceedings in *inter partes* reexamination.

(a) In any *inter partes* reexamination proceeding, the patent owner shall call the attention of the Office to any prior or concurrent proceedings in which the patent is or was involved, including but not limited to interference, reissue, reexamination, or litigation and the results of such proceedings.

(b) Notwithstanding any provision of the rules, any person at any time may file a paper in an *inter partes* reexamination proceeding notifying the Office of a prior or concurrent proceedings in which the same patent is or was involved, including but not limited to interference, reissue, reexamination, or litigation and the results of such proceedings. Such paper must be limited to merely providing notice of the other proceeding without discussion of issues of the current *inter partes* reexamination proceeding. Any paper not so limited will be returned to the sender.

§ 1.987 Suspension of *inter partes* reexamination proceeding due to litigation.

If a patent in the process of *inter partes* reexamination is or becomes involved in litigation, the Director shall determine whether or not to suspend the *inter partes* reexamination proceeding.

§ 1.989 Merger of concurrent reexamination proceedings.

(a) If any reexamination is ordered while a prior *inter partes* reexamination proceeding is pending for the same patent, a decision may be made to merge the two proceedings or to suspend one of the two proceedings. Where merger is ordered, the merged examination will normally result in the issuance of a single reexamination certificate under § 1.997.

(b) An *inter partes* reexamination proceeding filed under § 1.913 which is merged with an *ex parte* reexamination proceeding filed under § 1.510 will result in the merged proceeding being governed by §§ 1.902—1.997, except that the rights of any third-party requester of the *ex parte* reexamination shall be governed by §§ 1.510–1.560.

§ 1.991 Merger of concurrent reissue application and *inter partes* reexamination proceeding.

If a reissue application and an *inter partes* reexamination proceeding on which an order pursuant to § 1.931 has been mailed are pending concurrently on a patent, a decision may be made to merge the two proceedings or to suspend one of the two proceedings. Where merger of a reissue application and an *inter partes* reexamination proceeding is ordered, the merged proceeding will be conducted in accordance with §§ 1.171 through 1.179 and the patent owner will be required to place and maintain the same claims in the reissue application and the *inter partes* reexamination proceeding during the pendency of the merged proceeding. In a merged proceeding the third-party requester may participate to the extent provided under §§ 1.902–1.997, except such participation shall be limited to issues within the scope of *inter partes* reexamination. The examiner's actions and any responses by the patent owner or third-party requester in a merged proceeding will apply to both the reissue application and the *inter partes* reexamination proceeding and be physically entered into both files. Any *inter partes* reexamination proceeding merged with a reissue application shall be terminated by the grant of the reissued patent.

§ 1.993 Suspension of concurrent interference and *inter partes* reexamination proceeding.

If a patent in the process of *inter partes* reexamination is or becomes involved in an interference, the Director may suspend the *inter partes* reexamination or the interference. The Director will not consider a request to suspend an interference unless a motion under § 1.635 to suspend the interference has been presented to, and denied by, an administrative patent judge and the request is filed within ten (10) days of a decision by an administrative patent judge denying the motion for suspension or such other time as the administrative patent judge may set.

§ 1.995 Third-party requester's participation rights preserved in merged proceeding.

When a third-party requester is involved in one or more proceedings including an *inter partes* reexamination proceeding, the merger of such proceedings will be accomplished so as to preserve the third-party requester's right to participate to the extent specifically provided for in these regulations. In merged proceedings involving different requesters, any paper filed by one party in the merged proceeding shall be served on all other parties of the merged proceeding.

Reexamination Certificate in *inter partes* Reexamination

§ 1.997 Issuance of *inter partes* reexamination certificate.

(a) Upon the conclusion of an *inter partes* reexamination proceeding, the Director will issue a certificate in accordance with 35 U.S.C. 316 setting forth the results of the *inter partes* reexamination proceeding and the content of the patent following the *inter partes* reexamination proceeding.

(b) A certificate will be issued in each patent in which an *inter partes* reexamination proceeding has been ordered under § 1.931. Any statutory disclaimer filed by the patent owner will be made part of the certificate.

(c) The certificate will be sent to the patent owner at the address as provided for in § 1.33(c). A copy of the certificate will also be sent to the third-party requester of the *inter partes* reexamination proceeding.

(d) If a certificate has been issued which cancels all of the claims of the patent, no further Office proceedings will be conducted with regard to that patent or any reissue applications or any reexamination requests relating thereto.

(e) If the *inter partes* reexamination proceeding is terminated by the grant of a reissued patent as provided in § 1.991, the reissued patent will constitute the reexamination certificate required by this section and 35 U.S.C. 316.

(f) A notice of the issuance of each certificate under this section will be published in the *Official Gazette.*

Dated: March 30, 2000.

Q. Todd Dickinson,

Under Secretary of Commerce for Intellectual Property and Director of the United States, Patent and Trademark Office.

[FR Doc. 00–8284 Filed 4–5–00; 8:45 am]

BILLING CODE 3510–16–P

Federal Register

Thursday,
April 6, 2000

Part III

Department of Education

Office of Elementary and Secondary Education; Safe and Drug-Free Schools and Communities National Programs; Combined Notice Inviting Applications for New Awards for Fiscal Year 2000

DEPARTMENT OF EDUCATION

[CFDA Nos.: 84.184H, 84.184K, 84.184M, 84.184N]

Office of Elementary and Secondary Education; Safe and Drug-Free Schools and Communities National Programs; Combined Notice Inviting Applications for New Awards for Fiscal Year 2000

SUMMARY: The Secretary invites applications for new awards for fiscal year (FY) 2000 under four direct grant competitions supported by Safe and Drug-Free Schools and Communities Act (SDFSCA) National Programs.

PURPOSE OF PROGRAMS: The National Programs portion of the SDFSCA supports the development of innovative programs that (1) demonstrate effective new methods of ensuring safe and drug-free schools, colleges, and communities, and (2) provide models or proven effective practices that will assist schools and communities around the Nation to improve their programs funded under the State Grants portion of the SDFSCA.

APPLICATIONS AVAILABLE: April 6, 2000.

Applicable Regulations

The Education Department General Administrative Regulations (EDGAR) in 34 CFR parts 74, 75, 77, 79, 80, 81, 82, 85, 86 (note: The regulations in 34 CFR part 86 apply to institutions of higher education only), 97, 98, and 99; and (b) the notices of final priorities, definitions, eligible applicants, and selection criteria, as published elsewhere in this issue of the **Federal Register** apply to these competitions.

For Applications or Information Contact: Safe and Drug-Free Schools Program, 400 Maryland Avenue, SW, 3E–316, Washington, DC 20202–6123. Telephone: (202) 260–3954. By facsimile (202) 260–7767. Internet: *http://www.ed.gov/offices/OESE/SDFS.* If you use a telecommunications device for the deaf (TDD), you may call the Federal Information Relay Service (FIRS) at (800) 877–8339. However, the Department is not able to reproduce in an alternate format the standard forms included in the application package.

Electronic Access to This Document

You may view this document, as well as all other Department of Education documents published in the **Federal Register**, in text or Adobe Portable Document Format (PDF) on the Internet at either of the following sites:

http://ocfo.ed.gov/fedreg.htm

http://www.ed.gov/news.html

To use the PDF, you must have the Adobe Acrobat Reader Program with Search, which is available free at either of the previous sites. If you have questions about using the PDF, call the U.S. Government Printing Office (GPO) toll free at 1–888–293–6498; or in the Washington, DC area at (202) 512–1530.

Note: The official version of this document is the document published in the **Federal Register**. Free Internet access to the official edition of the **Federal Register** and the Code of Federal Regulations is available on GPO Access at: *http://www.access.gpo.gov/nara/index.html*

Program Authority: 20 U.S.C. 7131.

Dated: March 31, 2000.

Michael Cohen,

Assistant Secretary for Elementary and Secondary Education.

CFDA No. and name	Range of awards	Estimated average size of awards	Estimated number of awards	Estimated available funds	Project period	Deadline for receipt of applications	Deadline for intergovernmental review
84.184H Grant Competition to Prevent High-Risk Drinking and Violent Behavior Among College Students.	$125,000 to $225,000.	$175,000	8–12	$2,000,000	27 months	May 12, 2000	June 12, 2000.
84.184K Middle School Drug Prevention and School Safety Program Coordinators Grant Competition.	$250,000 to $400,000.	325,000	140	45,000,000	Up to 36 months.	May 12, 2000	June 12, 2000.
84.184M Effective Alternative Strategies: Grant Competition to Reduce Student Suspensions and Expulsions and Ensure Educational Progress of Students who are Suspended or Expelled.	$250,000 to $750,000.	500,000	20	10,000,000	Up to 36 months.	May 22, 2000	June 22, 2000.
84.184N Alcohol and Other Drug Prevention Models on College Campuses Grant Competition.	$50,000 to $90,000.	70,000	Up to 10	600,000	12 months	May 12, 2000	June 12, 2000.

Note: Range of awards, average size of awards, number of awards and available funding in this notice are estimates only. The Department is not bound by any estimates in this notice. Funding estimates for competition 84.184H represent funding for both the first and second years of the project period. Projects funded under competition 84.184H will not be subject to approval of continuation or to the availability of future years' funds. Funding for 84.184K and 84.184M represent the first year of the project period only. Funding for the second and third years of projects under competitions 84.184M and 84.184K are subject both to the availability of future years' funds and the approval of continuation (see 34 CFR 75.253). ALL APPLICATIONS MUST BE RECEIVED ON OR BEFORE 4:30 P.M. EASTERN TIME ON THE DEADLINE DATE. APPLICATIONS RECEIVED AFTER THAT TIME WILL NOT BE ELIGIBLE FOR FUNDING. POSTMARKED DATES WILL NOT BE ACCEPTED.

[FR Doc. 00–8449 Filed 4–5–00; 8:45 am]

BILLING CODE 4000–01–P

Federal Register

Thursday,
April 6, 2000

Part IV

Department of Education

Office of Elementary and Secondary Education—Safe and Drug-Free Schools and Communities National Programs Federal Activities—Effective Alternative Strategies: Grant Competition to Reduce Student Suspensions and Expulsions and Ensure Educational Progress of Students Who Are Suspended or Expelled; Notice

DEPARTMENT OF EDUCATION

Office of Elementary and Secondary Education—Safe and Drug-Free Schools and Communities National Programs—Federal Activities-Effective Alternative Strategies: Grant Competition to Reduce Student Suspensions and Expulsions and Ensure Educational Progress of Students Who Are Suspended or Expelled

AGENCY: Office of Elementary and Secondary Education, Department of Education.

ACTION: Notice of final priority and selection criteria.

SUMMARY: The Secretary announces a final priority and selection criteria for Fiscal Year (FY) 2000 under Safe and Drug-Free Schools and Communities National Programs—Federal Activities—Effective Alternative Strategies: Grant Competition to Reduce Student Suspensions and Expulsions and Ensure Educational Progress of Students Who Are Suspended or Expelled. The Secretary may use this priority and selection criteria for competitions in FY 2001 and later years. The Secretary takes this action to focus Federal financial assistance on an identified national need to reduce student suspensions and expulsions and ensure educational progress of suspended and expelled students.

EFFECTIVE DATE: This priority and selection criteria are effective May 8, 2000.

FOR FURTHER INFORMATION CONTACT: Dr. Ann Weinheimer, U.S. Department of Education, 400 Maryland Avenue, SW—Room 3E330, Washington, Dc 20202–6123. Telephone: (202) 708–5939. If you use a telecommunications device for the deaf (TDD), you may call the Federal Information Relay Service (FIRS) at (800) 877–8339.

Individuals with disabilities may obtain this document in an alternate format (*e.g.,* Braille, large print, audiotape, or computer diskette) on request to the contact person listed in the preceding paragraph.

Note: This notice of final priority does not solicit applications. A notice inviting applications under this competition is published elsewhere in this issue of the Federal Register. The notice inviting applications will specify the date and time by which applications for this competition must be received by the Department. Applications received after that time will not be eligible for funding. Postmarked dates will not be accepted.

SUPPLEMENTARY INFORMATION: The Secretary published a notice of proposed priority and selection criteria for this competition in the Federal Register on February 14, 2000, (Volume 65, Number 30, pages 7420–7421). Except for minor editorial revisions, there are no differences between the notice of proposed priority and selection criteria and this notice of final priority and selection criteria.

Public Comment

In the notice of proposed priority and selection criteria, the Secretary invited comments on the proposed priority and selection criteria. The only substantive comment we received suggested a change the law does not authorize the Secretary to make under the applicable statutory authority.

General

In making awards under this grant program, the Secretary may take into consideration the geographic distribution of the projects in addition to the rank order of applicants.

Contingent upon the availability of funds, the Secretary may make additional awards in Fiscal Year 2001 from the rank-ordered list of nonfunded applications from this competition.

Priority: Under 34 CFR 75.105(c)(3) and the Safe and Drug-Free Schools and Communities Act of 1994, the Secretary gives an absolute preference to applications that meet the following priority. The Secretary funds under this competition *only* those applications that meet this absolute priority:

Absolute Priority—Enhance, Implement, and Evaluate Strategies to Reduce the Number and Duration of Student Suspensions and Expulsions and Ensure Continued Educational Progress for Students Who Are Suspended or Expelled From School

Eligible Applicants: Eligible applicants under this competition are public and private non-profit organizations and individuals.

Selection Criteria: The Secretary uses the following selection criteria to evaluate applications for new grants under this competition. The maximum score for all of these criteria is 100 points. The maximum score for each criterion or factor under that criterion is indicated in parentheses.

(1) Need for Project (10 Points)

In determining the need for the proposed project the following factor is considered: The extent to which specific gaps or weaknesses in services, infrastructure, or opportunities have been identified and will be addressed by the proposed project, including the nature and magnitude of those gaps or weaknesses.

(2) Quality of the Project Design (30 Points)

In determining the quality of the design of the proposed project, the following factors are considered:

(A) The extent to which the goals, objectives, and outcomes to be achieved by the proposed project are clearly specified and measurable. (6 points)

(B) The extent to which the proposed project encourages parental involvement. (6 points)

(C) The extent to which the design of the proposed project is appropriate to, and will successfully address, the needs of the target population or other identified needs. (6 points)

(D) The extent to which the proposed project represents an exceptional approach to the priority. (6 points)

(E) The extent to which the proposed project will be coordinated with similar or related efforts, and with other appropriate community, State and Federal resources. (6 points)

(3) Quality of Project Services (30 Points)

In determining the quality of the proposed project services, the following factors are considered:

(A) The extent to which the quality and sufficiency of strategies for ensuring equal access and treatment for eligible project participants who are members of groups that have traditionally been underrepresented based on race, color, national origin, gender, age or disability. (6 points)

(B) The extent to which the services to be provided by the proposed project are appropriate to the needs of the intended recipients or beneficiaries of those services. (8 points)

(C) The likelihood that the services to be provided by the proposed project will lead to improvements in the achievement of students as measured against rigorous academic standards. (8 points)

(D) The extent to which the services to be provided by the proposed project involve the collaboration of appropriate community partners for maximizing the effectiveness of project services. (8 points)

(4) Quality of Project Personnel (15 Points)

In determining the quality of project personnel, the following factors are considered:

(A) The extent to which the applicant encourages applications for employment from persons who are members of groups that have traditionally been

underrepresented based on race, color, national origin, gender, age, or disability. (5 points)

(B) The qualifications, including relevant training and experience, of key project personnel. (10 points)

(5) Quality of the Project Evaluation (15 Points)

In determining the quality of the evaluation, the following factors are considered:

(A) The extent to which the methods of evaluation are thorough, feasible, and appropriate to the goals, objectives, and outcomes of the proposed project. (10 points)

(B) The extent to which the methods of evaluation will provide performance feedback and permit periodic assessment of progress toward achieving intended outcomes. (5 points)

Intergovernmental Review: This program is subject to Executive Order 12372 and the regulations in 34 CFR part 79. One of the objectives of the Executive order is to foster an intergovernmental partnership and a strengthened federalism. The Executive order relies on processes developed by State and local governments for coordination and review of proposed Federal financial assistance.

This document provides early notification of our specific plans and actions for this program.

Program Authority: 20 U.S.C. 7131.

Electronic Access to This Document

You may view this document, as well as all other Department of Education documents published in the **Federal Register**, in text or Adobe Portable Document Format (PDF) on the Internet at either of the following sites:

http://ocfo.ed.gov/fedreg.htm
http://www.ed.gov/news.html

To use the PDF, you must have the Adobe Acrobat Reader Program with Search, which is available free at either of the previous sites. If you have questions about using the PDF, call the U.S. Government Printing Office (GPO), toll free, at 1–888–293–6498; or in the Washington, DC area at (202) 512–1530.

Note: The official version of this document is the document published in the **Federal Register**. Free Internet access to the official edition of the **Federal Register** and the Code of Federal Regulations is available on GPO Access at: *http://www.access.gpo.gov/nara/index.html*

(Catalog of Federal Domestic Assistance Number 84.184M Office of Elementary and Secondary Education—Safe and Drug-Free Schools and Communities National Programs—Federal Activities—Grant Competition to Reduce Student Suspensions and Expulsions and Ensure Educational Progress of Suspended and Expelled Students)

Dated: March 31, 2000.

Michael Cohen,

Assistant Secretary for Elementary and Secondary Education.

[FR Doc. 00–8450 Filed 4–5–00; 8:45 am]

BILLING CODE 4000–01–U

Federal Register

Thursday,
April 6, 2000

Part V

Department of Education

Office of Elementary and Secondary Education—Safe and Drug-Free Schools and Communities National Programs—Federal Activities—Grant Competition To Prevent High-Risk Drinking and Violent Behavior Among College Students; Notice

DEPARTMENT OF EDUCATION

Office of Elementary and Secondary Education—Safe and Drug-Free Schools and Communities National Programs—Federal Activities—Grant Competition To Prevent High-Risk Drinking and Violent Behavior Among College Students

AGENCY: Office of Elementary and Secondary Education, Department of Education.

ACTION: Notice of final priorities, definitions, and selection criteria.

SUMMARY: The Secretary announces final priorities, definitions, and selection criteria for fiscal year (FY) 2000 under the Safe and Drug-Free Schools and Communities National Programs—Federal Activities—Grant Competition to Prevent High-Risk Drinking and Violent Behavior Among College Students. The Secretary may use one or more of these priorities, definitions, and selection criteria for competitions in fiscal year (FY) 2001 and later years. The Secretary takes this action to focus Federal financial assistance on an identified national need. This competition seeks to prevent high-risk drinking and violent behavior among college students.

EFFECTIVE DATE: These priorities, definitions, and selection criteria are effective May 8, 2000.

FOR FURTHER INFORMATION CONTACT: Richard Lucey, Jr., U.S. Department of Education, 400 Maryland Avenue, SW—Room 3E252, Washington, DC 20202–6123. Telephone: (202) 205–5471. If you use a telecommunications device for the deaf (TDD), you may call the Federal Information Relay Service (FIRS) at (800) 877–8339.

Individuals with disabilities may obtain this document in an alternate format (*e.g.,* Braille, large print, audiotape, or computer diskette) on request to the contact person listed in the preceding paragraph.

Note: This notice of final priorities does not solicit applications. A notice inviting applications under this competition is published elsewhere in this issue of the **Federal Register**. The notice inviting applications will specify the date and time by which applications for this competition must be received by the Department. Applications received after that time will not be eligible for funding. Postmarked dates will not be accepted.

SUPPLEMENTARY INFORMATION: The Secretary published a notice of proposed priorities, definitions, and selection criteria for this competition in the **Federal Register** on February 14, 2000 (65 FR 7372–7374). Except for minor editorial revisions, there are no differences between the notice of proposed priorities, definitions, and selection criteria and this notice of final priorities, definitions, and selection criteria.

Public Comment

In the notice of proposed priorities, definitions and selection criteria, the Secretary invited comments on the proposed priorities, definitions, and selection criteria. We did not receive any substantive comments.

Definitions

1. ''Two-year institutions of higher education (IHEs)'' are defined as those IHEs or branches of IHEs that are public or private nonprofit organizations and confer at least a two-year formal award (certificate, diploma, or associate's degree), or have a two-year program creditable toward a baccalaureate degree or higher award.

2. ''High-risk drinking'' is defined as those situations that may involve but not be limited to: binge drinking (commonly defined as five or more drinks on any one occasion); underage drinking; drinking and driving; situations when one's condition is already impaired by another cause, such as depression or emotional stress; or combining alcohol and medications, such as tranquilizers, sedatives, and antihistamines.

General

In making awards under this grant program, the Secretary may take into consideration the geographic distribution of the projects in addition to the rank order of applicants.

Contingent upon the availability of funds, the Secretary may make additional awards in FY 2001 from the rank-ordered list of nonfunded applications from this competition.

Priorities: Under 34 CFR 75.105(c)(3) and the Safe and Drug-Free Schools and Communities Act of 1994, the Secretary gives an absolute preference to applications that meet one or both of the following priorities, and funds under this competition *only* those applications that meet one or both of the following absolute priorities:

Absolute Priority #1—Develop or Enhance, Implement, and Evaluate Campus-Based Strategies To Prevent High-Risk Drinking by College Student Athletes, First-Year Students, or Students Attending Two-Year Institutions

Under this priority, applicants are required to propose projects that develop or enhance, implement, and evaluate strategies to prevent high-risk drinking by college student athletes, first-year students, or students attending two-year institutions of higher education. Grant applicants are required to:

(1) Identify the target population and provide a justification for its selection;

(2) Provide evidence that a needs assessment has been conducted on campus to document prevalence rates related to high-risk drinking by the population selected;

(3) Set measurable goals and objectives for the proposed project and provide a description of how progress toward achieving goals will be measured annually;

(4) Design and implement prevention strategies, using student input and participation, that research has shown to be effective in preventing high-risk drinking by the target population;

(5) Use a qualified evaluator to design and implement an evaluation of the project using outcomes-based (summative) performance indicators related to behavioral change and process (formative) measures that assess and document the strategies used; and

(6) Demonstrate the ability to start the project within 60 days after receiving Federal funding in order to maximize the time available to show impact within the grant period.

Absolute Priority #2—Develop or Enhance, Implement, and Evaluate Campus-Based Strategies To Prevent Violent Behavior by College Students

Under this priority, applicants must propose projects that develop or enhance, implement, and evaluate strategies to prevent violent behavior by college students. Grant applicants are required to:

(1) Provide evidence that a needs assessment has been conducted on campus to document prevalence rates related to violent behavior;

(2) Set measurable goals and objectives for the proposed project and provide a description of how progress toward achieving goals will be measured annually;

(3) Design and implement prevention strategies, using student input and participation, that research has shown to be effective in preventing violent behavior among college students;

(4) Use a qualified evaluator to design and implement an evaluation of the project using outcomes-based (summative) performance indicators related to behavioral change and process (formative) measures that assess and document the strategies used; and

(5) Demonstrate the ability to start the project within 60 days after receiving

Federal funding in order to maximize the time available to show impact within the grant period.

Selection Criteria

The Secretary uses the following selection criteria to evaluate applications for new grants under this competition. The maximum score for all of these criteria is 100 points. The maximum score for each criterion or factor under that criterion is indicated in parentheses.

(1) *Need for project.* (15 points)

In determining the need for the proposed project, the following factors are considered:

(a) The magnitude or severity of the problem to be addressed by the proposed project. (10 points)

(b) The extent to which specific gaps or weaknesses in services, infrastructure, or opportunities have been identified and will be addressed by the proposed project, including the nature and magnitude of those gaps or weaknesses. (5 points)

(2) *Significance.* (20 points)

In determining the significance of the proposed project, the following factors are considered:

(a) The likelihood that the proposed project will result in system change or improvement. (5 points)

(b) The potential contribution of the proposed project to the development and advancement of theory, knowledge, and practices in the field of study. (10 points)

(c) The extent to which the proposed project involves the development or demonstration of promising new strategies that build on, or are alternatives to, existing strategies. (5 points)

(3) *Quality of the project design.* (30 points)

In determining the quality of the design of the proposed project, the following factors are considered:

(a) The extent to which the goals, objectives, and outcomes to be achieved by the proposed project are clearly specified and measurable. (10 points)

(b) The extent to which the design of the proposed project is appropriate to, and will successfully address, the needs of the target population or other identified needs. (5 points)

(c) The extent to which the design of the proposed project reflects up-to-date knowledge from research and effective practice. (10 points)

(d) The extent to which the proposed project will establish linkages with other appropriate agencies and organizations providing services to the target population. (5 points)

(4) *Quality of project personnel.* (10 points)

In determining the quality of project personnel, the following factors are considered:

(a) The extent to which the applicant encourages applications for employment from persons who are members of groups that have traditionally been underrepresented based on race, color, national origin, gender, age, or disability. (3 points)

(b) The qualifications, including relevant training and experience, of key project personnel. (7 points)

(5) *Quality of the project evaluation.* (25 points)

In determining the quality of the evaluation, the following factors are considered:

(a) The extent to which the methods of evaluation are thorough, feasible, and appropriate to the goals, objectives, and outcomes of the proposed project. (10 points)

(b) The extent to which the methods of evaluation include the use of objective performance measures that are clearly related to the intended outcomes of the project and will produce quantitative and qualitative data to the extent possible. (10 points)

(c) The extent to which the methods of evaluation will provide performance feedback and permit periodic assessment of progress toward achieving intended outcomes. (5 points)

Intergovernmental Review: This program is subject to Executive Order 12372 and the regulations in 34 CFR part 79. One of the objectives of the Executive order is to foster an intergovernmental partnership and a strengthened federalism. The Executive order relies on processes developed by State and local governments for coordination and review of proposed Federal financial assistance.

This document provides early notification of our specific plans and actions for this program.

Program Authority: 20 U.S.C. 7131.

Electronic Access to This Document

You may view this document, as well as all other Department of Education documents published in the **Federal Register**, in text or Adobe Portable Document Format (PDF) on the Internet at either of the following sites:

http://ocfo.ed.gov/fedreg.htm

http://www.ed.gov/news.html

To use the PDF, you must have the Adobe Acrobat Reader Program with Search, which is available free at either of the previous sites. If you have questions about using the PDF, call the U.S. Government Printing Office (GPO) toll free at 1–888–293–6498; or in the Washington, DC area at (202) 512–1530.

Note: The official version of this document is the document published in the **Federal Register**. Free Internet access to the official edition of the **Federal Register** and the Code of Federal Regulations is available on GPO Access at: *http://www.access.gpo.gov/nara/index.html*

(Catalog of Federal Domestic Assistance Number 84.184H Office of Elementary and Secondary Education—Safe and Drug-Free Schools and Communities National Programs—Federal Activities—Grant Competition to Prevent High-Risk Drinking and Violent Behavior Among College Students)

Dated: March 31, 2000.

Michael Cohen,

Assistant Secretary for Elementary and Secondary Education.

[FR Doc. 00–8451 Filed 4–5–00; 8:45 am]

BILLING CODE 4000–01–U

Federal Register

Thursday,
April 6, 2000

Part VI

Department of Education

Office of Elementary and Secondary Education—Safe and Drug-Free Schools and Communities National Programs—Federal Activities—Middle School Drug Prevention and School Safety Program Coordinators Grant Competition; Notice

DEPARTMENT OF EDUCATION

Office of Elementary and Secondary Education—Safe and Drug-Free Schools and Communities National Programs—Federal Activities—Middle School Drug Prevention and School Safety Program Coordinators Grant Competition

AGENCY: Office of Elementary and Secondary Education, Department of Education.

ACTION: Notice of final priority, definitions, and selection criteria.

SUMMARY: The Secretary announces a final priority, definitions, and selection criteria for fiscal year (FY) 2000 under the Safe and Drug-Free Schools and Communities—National Programs—Federal Activities-Middle School Drug Prevention and School Safety Program Coordinators Grant Competition. The Secretary may use this priority, definitions, and selection criteria for competitions in fiscal year (FY) 2001 and later years. The Secretary takes this action to focus Federal financial assistance on a national need to recruit, hire and train drug prevention and school safety program coordinators in middle schools that have significant drug, discipline and violence problems.

EFFECTIVE DATE: This priority, definitions, and selection criteria are effective May 8, 2000.

FOR FURTHER INFORMATION CONTACT: Deirdra Hilliard, Safe and Drug-Free Schools Program, U.S. Department of Education, 400 Maryland Avenue, SW., Room 3E256, Washington, DC 20202–6123. Telephone: (202) 260–2643. If you use a telecommunications device for the deaf (TDD), you may call the Federal Information Relay Service (FIRS) at 1–800–877–8339.

Individuals with disabilities may obtain this document in an alternate format (e.g. Braille, large print, audiotape, or computer diskette) on request to the contact person listed in the preceding paragraph.

Note: This notice of final priority does not solicit applications. A notice inviting applications under this competition is published elsewhere in this issue of the **Federal Register**. The notice inviting applications will specify the date and time by which applications for this competition must be received by the Department. Applications received after that time will not be eligible for funding. Postmarked dates will not be accepted.

SUPPLEMENTARY INFORMATION: The Secretary published a notice of proposed priority, definitions, and selection criteria for this competition in the **Federal Register** on February 14, 2000 (65 FR 7424–7425). Except for minor editorial revisions, there are no differences between the notice of proposed priority, definitions, and selection criteria and this notice of final priority, definitions, and selection criteria.

Public Comment

In the notice of proposed priority, definitions, and selection criteria, the Secretary invited comments on the proposed priority, definitions, and selection criteria. We did not receive any comments.

Definitions: 1. Middle schools are defined as any school serving students in two or more grades from grades five through nine. Note: Students in grades lower than five or higher than nine are not eligible to be served under the absolute priority for the competition in this notice.

2. Local educational agencies (LEAs) with the most significant problems in their middle schools are defined as those that have identified drug use, drug prevention and school safety as serious problems in their most recent needs assessment and that have taken one or more of the following actions within the 12 months preceding the date of this announcement:

(1) Suspended, expelled, or transferred to alternative schools or programs at least one middle school student for possession, distribution, or use of alcohol or drugs, including tobacco;

(2) Referred for treatment of substance abuse at least five middle school students;

(3) Suspended, expelled, or transferred to alternative schools or programs at least one middle school student for possession or use of a firearm or other weapon;

(4) Suspended, expelled or transferred to alternative schools or programs at least five middle school students for physical attacks or fights.

General: In making awards under this grant program, the Secretary may take into consideration the geographic distribution of the projects in addition to the rank order of applicants.

Contingent upon the availability of funds, the Secretary may make additional awards in FY 2001 from the rank-ordered list of nonfunded applications from this competition.

Priority: Under 34 CFR 75.105(c)(3) and the Safe and Drug-Free Schools and Communities Act of 1994, the Secretary gives an absolute preference to applications that meet the following priority and funds under this competition only applications that meet this absolute priority.

Under the absolute funding priority for this grant competition, LEAs with significant drug, discipline, or school safety problems in their middle schools must propose projects that—

(a) Recruit, hire, and train full-time drug prevention and school safety program coordinator(s) for their middle schools with significant drug, discipline, or school safety problems;

(b) Require coordinators hired with funds under this priority to perform at least the following functions in one or more middle schools with significant drug, discipline or school safety problems:

(1) Identify research-based drug and violence prevention strategies and programs;

(2) Assist schools in adopting the most successful strategies, including training of teachers and staff and relevant partners, as needed;

(3) Develop, conduct, and analyze assessments of school crime and drug problems;

(4) Work with community agencies and organizations to ensure that students' needs are met;

(5) Work with parents and students to obtain information about effective programs and strategies and encourage their participation in program selection and implementation;

(6) Facilitate evaluation of prevention programs and strategies and use findings to modify programs, as needed;

(7) Identify additional funding sources for drug prevention and school safety program initiatives;

(8) Provide feedback to SEAs on programs and activities that have proven to be successful in reducing drug use and violent behavior;

(9) Coordinate with student assistance and employee assistance programs; and

(10) Link other educational resources, *e.g.* Title I compensatory education funds, to programs and strategies that serve to create safer, more orderly schools; and

(c) Have measurable goals and objectives and report annually on progress toward meeting those goals and objectives.

Local educational agencies may apply for funding under this priority to hire one or more coordinators to serve middle schools in the district. Each coordinator hired with funds from this grant must:

(1) Serve at least one middle school but no more than seven middle schools;

(2) Serve only students in two or more grades from grades five through nine;

Note: Students in grades lower than five or higher than nine are not eligible to be served under this priority.

(3) Have no duties other than coordination of drug prevention or school safety programs;

(4) At a minimum, have a degree from an accredited four-year institution of higher education and an academic background or equivalent work experience in a field related to youth development, such as education, psychology, sociology, social work, or nursing.

LEAs may apply in consortia with one or more adjacent LEAs; however, each participating LEA must ensure that all requirements of the priority for this competition are met.

Selection Criteria

The Secretary uses the following selection criteria to evaluate applications for new grants under this competition. The maximum score for all of these criteria is 100 points. The maximum score for each criterion or factor under that criterion is indicated in parentheses.

(1) *Need for the project.* (25 points)

In determining the need for the proposed project, the following factor is considered: The extent to which specific gaps or weaknesses in services, infrastructure, or opportunities have been identified and will be addressed by the proposed project, including the nature and magnitude of those gaps or weaknesses.

(2) *Quality of the project design.* (25 points)

In determining the quality of the design of the proposed project, the following factors are considered:

(A) The extent to which the design of the proposed project is appropriate to, and will successfully address, the needs of the target population;

(B) The extent to which the proposed project is designed to build capacity and yield results that will extend beyond the period of Federal financial assistance;

(C) The extent to which the proposed project will establish linkages with other appropriate agencies and organizations providing services to the target population, including community coalitions;

(D) The extent to which the proposed project encourages parental involvement in the development and implementation of the project; and

(E) The extent to which performance feedback and continuous improvement are integral to the design of the proposed project.

(3) *Adequacy of Resources* (25 points)

In determining the adequacy of resources, the following factors are considered:

(A) The adequacy of support, including facilities, equipment, supplies and other resources from the applicant organization or the lead applicant organization;

(B) The extent to which the costs are reasonable in relation to the number of persons to be served and to the anticipated results and benefits;

(C) The potential for continued support of the project after Federal funding ends, including, as appropriate, the demonstrated commitment of appropriate entities to such support; and

(D) The potential for the incorporation of project purposes, activities, or benefits into the ongoing program of the agency or organization at the end of Federal funding.

(4) *Quality of the project evaluation* (25 points)

In determining the quality of the project evaluation, the following factors are considered:

(A) The extent to which the methods of evaluation are appropriate to the context within which the project operates;

(B) The extent to which the methods of evaluation provide for examining the effectiveness of project implementation strategies; and

(C) The extent to which the methods of evaluation will provide performance feedback and permit periodic assessment of progress toward achieving intended outcomes.

Intergovernmental Review: This program is subject to Executive Order 12372 and the regulations in 34 CFR part 79. One of the objectives of the Executive Order is to foster an intergovernmental partnership and a strengthened federalism. The Executive order relies on processes developed by State and local governments for coordination and review of proposed Federal financial assistance.

This document provides early notification of our specific plans and actions for this program.

Program Authority: 20 U.S.C. 7131.

Electronic Access to This Document

You may view this document, as well as all other Department of Education documents published in the **Federal Register**, in text or Adobe Portable Document Format (PDF) on the Internet at either of the following sites:

http://ocfo.ed.gov/fedreg.htm

http://www.ed.gov/news.html

To use the PDF you must have the Adobe Acrobat Reader Program with Search, which is available free at either of the previous sites. If you have questions about using the PDF, call the U.S. Government Printing Office (GPO) toll free, at 1–888–293–6498; or in the Washington, DC area at (202) 512–1530.

Note: The official version of this *document is the document published in the* **Federal Register**. Free Internet access to the official edition of the **Federal Register** and the Code of Federal Regulations is available on GPO Access at:

http://www.access.gpo.gov/nara/index.html

(Catalogue of Federal Domestic Assistance Number 84.184K, Safe and Drug-Free Schools and Communities Act—National Programs—Federal Activities—Middle School Drug Prevention and School Safety Program Coordinators Grant Competition)

Dated: March 31, 2000.

Michael Cohen,

Assistant Secretary for Elementary and Secondary Education.

[FR Doc. 00–8452 Filed 4–5–00; 8:45 am]

BILLING CODE 4000–01–U

Federal Register

Thursday,
April 6, 2000

Part VII

Department of Education

Office of Elementary and Secondary Education; Safe and Drug-Free Schools and Communities National Programs; Federal Activities; and Alcohol and Other Drug Prevention Models on College Campuses Grant Competition; Notice

DEPARTMENT OF EDUCATION

Office of Elementary and Secondary Education; Safe and Drug-Free Schools and Communities National Programs; Federal Activities; Alcohol and Other Drug Prevention Models on College Campuses Grant Competition

AGENCY: Office of Elementary and Secondary Education, Department of Education.

ACTION: Notice of final priority, eligible applicants, and selection criteria.

SUMMARY: The Secretary announces a final priority, eligible applicants, and selection criteria for fiscal year (FY) 2000 under the Safe and Drug-Free Schools and Communities National Programs—Federal Activities—Alcohol and Other Drug Prevention Models on College Campuses Grant Competition. The Secretary may use this priority, eligible applicants, and selection criteria for competitions in FY 2001 and later years. The Secretary takes this action to use Federal financial assistance to identify and disseminate models of alcohol and other drug (AOD) prevention at institutions of higher education (IHEs).

EFFECTIVE DATE: This priority, eligible applicants, and selection criteria are effective May 8, 2000.

FOR FURTHER INFORMATION CONTACT: Kimberly Light, U.S. Department of Education, 400 Maryland Avenue, SW—Room 3E222, Washington, DC 20202–6123. Telephone: (202) 260–2647. If you use a telecommunications device for the deaf (TDD), you may call the Federal Information Relay Service (FIRS) at (800) 877–8339.

Individuals with disabilities may obtain this document in an alternate format (e.g., Braille, large print, audiotape, or computer diskette) on request to the contact person listed in the preceding paragraph.

Note: This notice of final priorities does not solicit applications. A notice inviting applications under this competition is published elsewhere in this issue of the **Federal Register**. The notice inviting applications will specify the date and time by which applications for this competition must be received by the Department. Applications received after that time will not be eligible for funding. Postmarked dates will not be accepted.

SUPPLEMENTARY INFORMATION: The Secretary published a notice of proposed priority, eligible applicants, and selection criteria for this competition in the **Federal Register** on February 14, 2000 (65 FR 7370–7372). Except for minor editorial revisions, there are no differences between the notice of proposed priority, eligible applicants, and selection criteria and this notice of final priority, eligible applicants, and selection criteria.

Analysis of Comments and Changes

In response to the Secretary's invitation in the notice of proposed priority, two parties submitted comments on the proposed priority. An analysis of the comments follows. Comments that propose changes the law does not authorize the Secretary to make under the applicable statutory authority are not addressed.

Eligible Applicants

Comments: One commenter recommended that eligible applicants include park and recreation sites adjacent to campuses.

Discussion: In the original authorization for this program (Section 120(f) of the Higher Education Act, as amended), Congress clearly intended the recipients of grant awards to be IHEs. Although the current grant program is being administered under the Safe and Drug-Free Schools and Communities National Programs, the Secretary plans to follow as closely as possible the original intent of Congress to award funds to IHEs.

Changes: None.

Absolute Priority

Comments: One commenter suggested that student assistance programs be among the models emphasized under the priority.

Discussion: The priority language is broad enough to include a wide range of alcohol and other drug programs, which may include student assistance programs. It is not necessary to emphasize any particular type of program within the priority.

Changes: None.

General

In making awards under this grant program, the Secretary may take into consideration the geographic distribution of the projects and the diversity of activities addressed by the projects in addition to the rank order of applicants.

Contingent upon availability of funds, the Secretary may make additional awards in FY 2001 from the rank-ordered list of nonfunded applications from this competition.

Priority: Under 34 CFR 75.105(c)(3) and the Safe and Drug-Free Schools and Communities Act of 1994, the Secretary gives an absolute preference to applications that meet the following priority, and funds under this competition *only* those applications that meet the following absolute priority:

Under this priority, an IHE that wishes to be considered for an award for a model program must identify, propose to maintain, improve, or further evaluate, and propose to disseminate information about an effective alcohol or other drug prevention program currently being used on its campus. Applications must:

(1) Describe an alcohol or other drug prevention program that has been implemented for at least one full academic year on the applicant's campus;

(2) Provide evidence of the effectiveness of the program;

(3) Provide a plan to maintain, improve, or further evaluate the program during the year following award; and

(4) Provide a plan to disseminate information to assist other IHEs in implementing a similar program.

Eligible Applicants: Institutions of higher education (IHEs) are the eligible applicants under this competition. To be eligible, an IHE must not have received an award under this competition (under either CFDA 84.116X or 84.184N) during the previous two (2) fiscal years.

Selection Criteria: The Assistant Secretary uses the following selection criteria to evaluate applications for new grants under this competition. The maximum score for all of these criteria is 100 points. The maximum score for each criterion or factor under that criterion is indicated in parentheses.

(1) *Significance.* (25 points)

In determining the significance of the model, the following factors are considered:

(a) The extent to which the program involves the development or demonstration of innovative strategies that build on, or are alternatives to, existing strategies. (15 points)

(b) The potential replicability of the program, including, as appropriate, the potential for implementation in a variety of settings. (5 points)

(c) The extent to which the results of the program are to be disseminated in ways that will enable others to use the information or strategies. (5 points)

(2) *Quality of the program design.* (40 points)

In determining the quality of the design of the program, the following factors are considered:

(a) The extent to which the design of the program reflects up-to-date knowledge from research and effective practice. (20 points)

(b) The extent to which the goals, objectives, and outcomes of the program

are clearly specified and measurable. (5 points)

(c) The extent to which the design of the program is appropriate to, and successfully addresses, the needs of the target population or other identified needs. (10 points)

(d) The quality of the plan to maintain, improve, or further evaluate the program. (5 points)

In applying the above criteria, the following information is considered:

(1) The quality of the needs assessment and how well this assessment relates to the goals and objectives of the program.

(2) How well the program is integrated within a comprehensive alcohol and other drug prevention effort.

(3) The level of institutional commitment, leadership and support for alcohol and other drug prevention efforts.

(4) The clarity and strength of the institution's alcohol or other drug policies and the extent to which those policies are broadly disseminated and consistently enforced.

(5) The extent to which students and employees are involved in the program design and implementation process.

(6) The extent to which the institution has joined with community leaders to address AOD issues.

(7) If applying to be considered as an alcohol prevention model, what steps the institution is taking to limit alcoholic beverage sponsorship, advertising, and marketing on campus; and what steps are being taken to establish or expand upon alcohol-free living arrangements for students.

(3) *Quality of the project evaluation.* (35 points)

In determining the quality of the evaluation, the following factors are considered:

(a) The extent to which the methods of evaluation are thorough, feasible, and appropriate to the goals, objectives and outcomes of the program. (10 points)

(b) The extent to which the evaluation data provide evidence of the effectiveness of the program in reducing either alcohol or other drug use, in reducing the problems resulting from either alcohol or other drug use, or in meeting outcome objectives that are associated with reductions in alcohol or other drug use or resulting problems. (25 points)

In applying the above criteria, the following information is considered:

(1) The quality of the evaluation methodology and evaluation instruments.

(2) Whether both process (formative) and outcome (summative) data are included for each year that the program has been implemented, including data collected both before and after initiation of the program.

(3) How evaluation information has been used for continuous improvement of the program.

Intergovernmental Review: This program is subject to Executive Order 12372 and the regulations in 34 CFR part 79. One of the objectives of the Executive order is to foster an intergovernmental partnership and a strengthened federalism. The Executive order relies on processes developed by State and local governments for coordination and review of proposed Federal financial assistance.

This document provides early notification of our specific plans and actions for this program.

Program Authority: 20 U.S.C. 7131.

Electronic Access to This Document

You may view this document, as well as all other Department of Education documents published in the **Federal Register**, in text or Adobe Portable Document Format (PDF) on the Internet at either of the following sites:

http://ocfo.ed.gov/fedreg.htm
http://www.ed.gov/news.html

To use the PDF, you must have the Adobe Acrobat Reader Program with Search, which is available free at either of the previous sites. If you have questions about using the PDF, call the U.S. Government Printing Office (GPO) toll free at 1–888–293–6498; or in the Washington, DC area at (202) 512–1530.

Note: The official version of this document is the document published in the **Federal Register**. Free Internet access to the official edition of the **Federal Register** and the Code of Federal Regulations is available on GPO Access at:

http://www.access.gpo.gov/nara/index.html

(Catalog of Federal Domestic Assistance Number 84.184N Office of Elementary and Secondary Education—Safe and Drug-Free Schools and Communities National Programs—Federal Activities—Alcohol and Other Drug Prevention Models on College Campuses Grant Competition)

Dated: March 31, 2000.

Michael Cohen,

Assistant Secretary for Elementary and Secondary Education.

[FR Doc. 00–8453 Filed 4–5–00; 8:45 am]

BILLING CODE 4000–01–U

Federal Register

Thursday,
April 6, 2000

Part VIII

Department of Labor

Pension and Welfare Benefits Administration

Strategic Enforcement Plan; Notice

DEPARTMENT OF LABOR

Pension and Welfare Benefits Administration

Pension and Welfare Benefits Administration; Strategic Enforcement Plan

AGENCY: Pension and Welfare Benefits Administration, Department of Labor.

ACTION: Notice.

SUMMARY: The Pension and Welfare Benefits Administration (PWBA) is publishing this Strategic Enforcement Plan (StEP) for the purposes of informing the public of its current goals, priorities, and methods, and promoting compliance with Title I of the Employee Retirement Income Security Act of 1974, as amended (ERISA). The primary purpose of the StEP is to establish a general framework through which PWBA's enforcement resources may be efficiently and effectively focused to achieve the agency's policy and operational objectives.

EFFECTIVE DATE: This Strategic Enforcement Plan is effective on April 6, 2000.

FOR FURTHER INFORMATION CONTACT: Virginia C. Smith, Director of Enforcement, (202) 219–8840 (this is not a toll-free number).

SUPPLEMENTARY INFORMATION:

I. Statutory Framework

The Employee Retirement Income Security Act (ERISA), enacted in 1974, prescribes uniform minimum standards to ensure that employee benefit plans are fair and financially sound and provide workers with the benefits promised by their employers. The law covers most private sector employee benefit plans that are voluntarily established and maintained by an employer, an employee organization, or some combination of these. Pension plans—a major type of employee benefit plan—provide retirement income or defer income until the employee stops working or sometime later. Other employee benefit plans are called welfare plans; these provide health, disability, and other similar benefits.

Three federal agencies play a role in administering ERISA. The Internal Revenue Service oversees the tax code provisions of the law. The Pension Benefit Guaranty Corporation (PBGC) administers the federally-sponsored insurance provisions covering defined benefit pension plans. The third agency, the Pension and Welfare Benefits Administration within the Department of Labor, has principal responsibility for administering Title I of ERISA. ERISA confers substantial law enforcement responsibilities on PWBA, giving PWBA the authority to conduct investigations and to seek appropriate remedies to correct violations of the law, including litigation where necessary.

Title I of ERISA sets forth standards and rules governing the conduct of plan fiduciaries. In general, people who exercise discretionary authority or manage a plan or have authority to dispose of its assets are ''fiduciaries'' for purposes of Title I of ERISA. Fiduciaries are required, among other things, to discharge their duties solely in the interest of plan participants and beneficiaries and for the exclusive purpose of providing benefits and defraying reasonable expenses of administering the plan. In discharging their duties, fiduciaries must act prudently and in accordance with the documents governing the plan, to the extent such documents are consistent with ERISA. Certain transactions between an employee benefit plan and ''parties in interest,'' which include the employer and others who may be in a position to exercise improper influence over the plan, are prohibited by ERISA.

II. Organization of PWBA'S Enforcement Program

PWBA enforces ERISA by conducting investigations through its ten regional offices and five district offices located in major cities around the country.[1] These field offices conduct investigations to gather information and evaluate compliance with ERISA's civil law requirements as well as criminal law provisions relating to employee benefit plans. Except in those cases involving national priorities, projects, enforcement policy, or other designated matters, the field offices generally exercise broad discretion in determining when investigations are to be opened and which entities or individuals are to be investigated. The field offices conduct their investigations in accordance with established enforcement procedures.

Each PWBA field office coordinates civil investigations and case referrals with its local Regional Solicitor's Office (RSOL) or with the Plan Benefits Security Division (PBSD) of the Solicitor's Office in Washington, DC, which are responsible for bringing civil lawsuits on behalf of the agency.

PWBA's Office of Enforcement (OE), located in Washington, DC, communicates national enforcement policies, priorities, and procedures to PWBA's field offices. OE is responsible for operational review and oversight, enforcement policy direction, program coordination, and technical assistance.

III. Purpose and Scope of the Strategic Enforcement Plan

During fiscal year 1999, PWBA had fewer than 400 investigators, the front-line staff who identify and investigate civil and criminal violations relating to employee benefit plans. With over 700,000 pension plans and 4.5 million welfare plans, PWBA must use its investigative staff effectively to protect the more than $4.3 trillion in assets contained in private employee benefit plans. For this reason, a 1995 report by the Brookings Institution referred to PWBA as probably the most highly leveraged agency in the U.S. government.[2]

The primary purpose of PWBA's Strategic Enforcement Plan (StEP) is to establish a general framework through which PWBA's enforcement resources may be efficiently and effectively focused to achieve the agency's policy and operational objectives. The StEP identifies and describes PWBA's enforcement priorities; the planned allocation of enforcement resources to carry out these priorities is established yearly in an operational plan. PWBA intends to reference this StEP when it exercises its enforcement discretion; however, the StEP does not create or confer any rights, duties, obligations, or defenses, implied or otherwise, on any person or entity.

Because of the substantial demands that are placed on PWBA's limited investigative resources, the StEP establishes broad policy criteria to ensure an appropriate balance of priorities while maintaining the highest possible standard of operational efficiency. Within the framework of these criteria, each region may exercise discretion in allocating investigative resources, provided appropriate resources are allocated to implement national projects and other designated items, such as emerging issues and high profile investigations which warrant special attention. National investigative priorities and projects are identified and developed with participation of field office management.

IV. Enforcement Strategy

In fiscal year 1997, the Secretary of Labor established three strategic goals

[1] PWBA regional offices are located in Boston, New York, Philadelphia, Atlanta, Cincinnati, Chicago, Dallas, Kansas City, San Francisco, and Los Angeles. PWBA district offices are located in Washington, D.C., Miami, Detroit, St. Louis, and Seattle.

[2] ''Cutting Government,'' A Report of the Brookings Institution's Center for Public Management, May 22, 1995.

for the Department of Labor: A Prepared Workforce; A Secure Workforce; and Quality Workplaces. PWBA's enforcement strategy is designed to support the strategic goal of a secure workforce by deterring and correcting violations of ERISA and related statutes. PWBA supports the goal of a secure workforce by other means as well, such as the development of the ERISA Filing Acceptance System for Form 5500 annual reports, educating the pension and welfare benefits community, and providing individual assistance to participants.

A. Targeting

The term ''targeting'' refers to the PWBA process whereby specific individuals or entities are identified for investigation because of some indication that an ERISA violation may have occurred or may be about to occur. For example, the targeting process could be as simple as opening a single investigation based on information received from a plan participant whose benefits are past due or it could involve opening hundreds of cases based on the computer-generated results of Form 5500 review and analysis.

Because there are over five million private employee benefit plans under PWBA's jurisdiction, targeting is essential to effectively use PWBA's limited investigative resources. Targeting focuses PWBA resources on those situations, issues, individuals, or entities where the most serious potential for ERISA violations is likely to exist.

PWBA strives to establish targeting methods that focus investigative resources in areas that are most likely to uncover abuses. Because evaluating ERISA violations usually involves applying legal standards to complex factual scenarios, the challenge in constructing effective targeting methods is to identify factors that can be used to pinpoint specific plans (*e.g.,* those with delinquent forwarding of employee contributions), individuals, and other entities in violation of the law.

Once the type of conduct and the individual or entity is identified, the field office must decide whether to formally open an investigation. This determination may be based on a number of considerations such as the egregiousness of the conduct, the amount of money or property at risk, or the number of participants potentially affected. Although the field offices are generally responsible for identifying potential investigative targets and determining which cases are to be opened, in certain cases these activities may be coordinated with OE.

PWBA must apply its investigative resources in a manner that will result in prompt and effective enforcement actions, and timely results. OE and field office managers determine how cases are to be investigated, evaluated, and resolved to achieve this goal. In some cases field office managers must determine whether to pursue an issue civilly, criminally, or both simultaneously. In addition, the investigators are responsible for implementing investigative methods designed to achieve timely monetary or injunctive relief, as appropriate. In some cases, the most effective approach may require referral to another state or federal agency because of the legal issues involved. In determining which course of enforcement action to pursue or which method to apply to prevent, redress, or punish illegal behavior, PWBA will consider all available options and strive to follow the best alternative available.

B. Protecting At-Risk Populations

Employee benefit plans provide income and services on which individuals rely for their quality of life, often to a critical degree. The financial security of an individual or a family may be jeopardized if pension, health, or other benefits are not paid as promised. Medical benefit plans provide not only for the physical well-being of individuals, but often provide access to services which individuals might not otherwise be able to afford.

PWBA seeks to identify situations and apply its enforcement resources to protect those employee benefit plan participants and beneficiaries whose security and livelihood are in the greatest danger of being harmed as a result of ERISA violations. Such methods focus on those situations where participants and beneficiaries are most susceptible to actual loss of benefits, or where ''populations'' of plan participants are potentially exposed to the greatest risk of falling victim to unlawful conduct.

All of PWBA's field offices engage in outreach efforts which are designed to assist potentially vulnerable populations such as participants who might have otherwise lost coverage or benefits (e.g., employees whose benefits are affected by plant closings, or employers who might be victimized by unscrupulous health care promoters) or plans for which benefits are not federally insured, such as 401(k) plans. These outreach efforts may involve speaking at conferences and seminars sponsored by trade, professional, and educational groups or participating in outreach and educational efforts in conjunction with other federal or state agencies.[3] Educating participants and beneficiaries about their benefits, rights, and the availability of PWBA's enforcement authority helps establish an environment where they can help protect their own benefits through recognizing potential problems or notifying PWBA in appropriate situations.

Although PWBA seeks to protect the benefits of plan participants and beneficiaries that are at actual risk of loss, in some cases an investigation will be conducted even where benefits do not appear to be at risk. For example, a health care service provider may pay a plan fiduciary a ''kickback'' in exchange for the fiduciary's selecting that entity over another. Enforcement action is warranted in such cases to ensure the integrity of the system even though the plan participants and beneficiaries incurred no actual harm. Situations involving self-dealing, conflicts of interest, and gross imprudence are examples of other types of violations that may warrant investigation even in the absence of demonstrated harm to plan participants.

C. Deterring Violations

Almost all enforcement programs hope to deter people from violating the law. PWBA seeks to deter illegal conduct through the continuing effectiveness of its civil and criminal enforcement efforts. PWBA actively publicizes its litigation, which has proven useful in encouraging voluntary compliance by others.

While PWBA seeks to recover losses incurred by participants, it also seeks to maintain the financial and operational integrity of the private employee benefit plan system. Doing so has sometimes involved conducting investigations that address potentially abusive practices which may not involve actual losses to the plans or participants.[4] Because such projects are effective at changing certain types of behavior, this approach will

[3] In July 1995, PWBA launched its national pension education campaign to inform and encourage people to make educated choices about retirement planning, especially small business owners, young people, low wage workers, women, and minorities. This information campaign was supplemented in December 1998 by PWBA's national health benefits education campaign, which is designed to help people understand their medical benefits when they experience changes in life and work.

[4] An example of such a project was the enforcement initiative relating to corporate governance issues, known as the Proxy Project. While the Proxy Project did not result in any monetary recoveries on behalf of plans, it was enormously successful in educating the ERISA community regarding their legal responsibilities under ERISA with respect to the voting of proxies.

continue to be used by PWBA under selected circumstances.

PWBA also has responsibilities for enforcing the criminal provisions contained in ERISA and violations under Title 18 of the U.S. Code which affect employee benefit plans. In pursuing criminal violations, PWBA staff work with the local U.S. Attorneys' Offices, as well as other law enforcement agencies, to support effective prosecution and sentencing. After a conviction is obtained, PWBA is diligent in ensuring that the statutory bar provided for in section 411 of ERISA is applied. This section of ERISA generally prohibits any person who has been convicted or imprisoned for any of the enumerated criminal offenses from serving in virtually any capacity relating to an employee benefit plan for 13 years after conviction or completion of imprisonment.

On March 15, 2000, PWBA adopted its Voluntary Fiduciary Correction Program, which encourages the voluntary correction of certain violations of Title I of ERISA. The program allows plan officials to identify and fully correct thirteen transactions, such as prohibited purchases and sales, improper loans, delinquent participant contributions, and improper plan expenses. If an eligible party documents the acceptable correction of a transaction, PWBA will issue a no-action letter, and will not initiate a civil investigation under Title I of ERISA regarding the applicant's responsibility for any transaction described in the no-action letter. PWBA expects this program to facilitate corrections by plan officials who want to come into compliance with the law with respect to their past practices, and promote better compliance in the future.

V. Implementing the Enforcement Strategy

PWBA's enforcement strategy is implemented through the guidance in this document, the StEP, and at a working level through the agency's annual performance goals, developed by the field offices in coordination with OE. The annual performance goals translate the general policy guidance articulated in the StEP into practical application.

A. Civil Investigations

PWBA's enforcement program is primarily carried out through civil investigations. PWBA organizes its civil investigative program using two main approaches: (i) national projects, which are investigative projects that further more broadly established long-range national investigative priorities, and (ii) regional projects which are localized investigative projects undertaken by individual PWBA regional offices.

1. National Investigative Priorities

PWBA establishes national investigative priorities to ensure that its enforcement program focuses on the areas that are critical to the well-being of employee benefit plans. Types of plans, benefits, or other broad segments of the regulated employee benefit plan universe are identified and designated for emphasis by PWBA's enforcement program. These areas will generally be designated for emphasis over several years. Each year, PWBA identifies specific national investigative projects, within these national investigative priorities, to which it will dedicate enforcement resources. These projects are designed to identify and correct ERISA violations which PWBA believes may be widespread or to focus on possible abusive practices that may affect many plans.

There are three current national investigative priorities: plan service providers, health care plans, and defined contribution pension plans.

a. *Plan Service Providers.* The term ''plan service provider'' refers to any person or entity which provides a direct or indirect service to an employee benefit plan for compensation. Third party administrators, accountants, attorneys, and actuaries are plan service providers. Plan service providers also include financial institutions such as banks, trust companies, investment management companies and insurance companies as well as others that manage or administer, directly or indirectly, funds or property owned by employee benefit plans.

Investigations of plan service providers offer the opportunity to address abusive practices that may affect more than one plan, and by focusing investigative resources on plan service providers, PWBA can address violations involving many plans. Because such investigations generally result in larger recoveries for more plans and more participants, this approach provides a mechanism whereby PWBA can leverage its resources and obtain the maximum impact for the benefit of plan participants and beneficiaries.

When investigating plan service providers, PWBA generally focuses on the abusive practices committed by the specific service providers rather than the plans. For example, where a third party administrator has systematically retained an undisclosed fee, generally the focus will be on the third party administrator rather than the plan that contracted for the services. Because the investigation of plan service providers offers the opportunity to leverage available staffing, the field offices are encouraged to allocate appropriate resources to the targeting and investigation of these issues or entities.

b. *Health Benefit Issues.* The Department has estimated that there are a total of 2.6 million ERISA-covered health plans, covering approximately 122 million participants and beneficiaries. In recent years several factors have combined to make the management and administration of ERISA-covered health plans a matter of vital national importance, including increased health care costs (due in part to improved technology and accessibility); changes in the health care delivery and funding systems; and the evolution of the legal standard under which health plans and their service providers must operate. As the cost of health care has increased, the methods for delivering that care have changed. In general, the increase in health care costs is regarded as a key factor in the move toward managed care which is designed to control access to health care and its related costs.

PWBA seeks to ensure that plans and the benefits of their participants and beneficiaries are protected. The application of available remedies under ERISA is critical in those cases where federal preemption leaves participants with no other effective statutory or common law cause of action. PWBA seeks to apply the full extent of ERISA's remedies and to promote a legal standard that will increase the availability of appropriate remedies to protect plans and their participants and beneficiaries.

Because of the critical importance of the health benefits area, PWBA has in recent years applied substantial resources to addressing abusive practices that violate ERISA, pursuing enforcement actions involving multiple employer welfare arrangements (MEWAs), and insurers and service providers who receive hidden discounts. PWBA's role in the health care area has also expanded as a result of the enactment of new legislation that includes regulatory and enforcement requirements to be implemented by PWBA, including:

- The Health Insurance Portability and Accountability Act of 1996 (HIPAA), which amended ERISA to provide for, among other things, improved portability and continuity of health insurance coverage provided in connection with employment;
- The Newborns' and Mothers' Health Protection Act of 1996 (NMHPA), which amended ERISA to establish minimum

requirements for hospital stays relating to childbirth;

• The Mental Health Parity Act of 1996 (MHPA), which amended ERISA to establish certain minimum requirements relating to mental health coverage; and

• The Women's Health and Cancer Rights Act (WHCRA), which amended ERISA to provide new protections for patients who elect breast reconstruction in connection with a mastectomy.

In the wake of these and other legislative amendments to ERISA, PWBA will continue to devote substantial enforcement resources to the targeting and investigation of fiduciary issues relating to health benefit issues.[5]

c. *Defined Contribution Plans.* There are two major types of pension plans under ERISA. In a defined benefit plan, the plan sponsor makes contributions to a fund and those contributions are intended to provide a promised level of benefits upon retirement. The amount of benefits paid is usually based upon a formula. With this type of plan the plan sponsor is responsible for managing the assets in the fund to ensure the amount is sufficient to pay benefits in the future. If the amount of funding in the plan is not sufficient to pay future benefits the plan sponsor is responsible for the short fall. These types of plans are also covered by termination insurance issued by the PBGC.

In contrast, defined contribution plans are plans where the plan sponsor and/or the participant makes contributions to an account and the amount paid to the participant upon retirement is determined by the amount of funds that have accumulated in the account. Participants in defined contribution plans bear the risk of investment loss, whereas in defined benefit plans that risk is borne primarily by the plan sponsor or the PBGC and only secondarily by the participant, if on plan termination the sponsor is bankrupt and PBGC insurance does not cover the benefit. Because defined contribution plans are not covered by PBGC insurance, if a plan experiences losses due to a fiduciary breach the plan participants are directly affected and, unless the funds can be recovered through enforcement or other legal actions, that loss will be irrevocable.

In recent years there has been a tremendous growth of 401(k) type of defined contribution plans in terms of the number of plans, number of participants, and amount of assets in these type plans. This growth and the related administrative and investment practices which have developed to accommodate these plans warrant scrutiny to ensure the safety of this large volume of assets.[6] PWBA has identified defined contribution plans as a national enforcement priority because the risk of loss in such plans rests entirely on the plan participants.

2. National Projects

National projects are investigative projects focusing on a selected issue or group of related issues which fall within the established national enforcement priorities. Once an issue or group of issues has been designated as a national project each PWBA field office generally must give priority to conducting investigations and dedicating appropriate resources to the project during the fiscal year. Although national projects are intended to focus on issues of national scope and significance, specific projects may on occasion address issues that are not necessarily prevalent in all areas of the country and the participation of only a selected group of PWBA field offices may be required.

The issues selected for implementation as national projects are determined (or reviewed, since an individual national project may extend over more than one fiscal year) with the input of PWBA's field offices in annual planning sessions. National projects may originate as an expansion of a successful regional project or arise in connection with field office investigations. For example, one national project which has been ongoing for a number of years is the investigation of multiple employer welfare arrangements (MEWAs).

Coordination and enforcement policy determinations for national projects are generally directed through OE. Such direction is conducted with substantial participation and opportunity to comment by the field office managers. OE's involvement in national projects includes monitoring and evaluating the project's progression and, where appropriate, issuing procedural directives and technical guidance.

3. Regional Projects

Enforcement initiatives are also conducted as projects by individual regions. Each year the field office managers submit their project proposals to OE for review and approval. The subjects selected for regional projects are generally topics that have been identified by a particular region as constituting an enforcement issue that may be unique or particularly problematic within its geographic jurisdiction. Because the field staff may be able to identify potential issues through their investigative activities, the regions have the unique opportunity to observe industry practices first hand and select issues for development as regional projects which may ultimately be appropriate for adoption as national projects. Normally, an issue selected as a regional project will be:

• Well-defined both in terms of scope and focus rather than couched in terms of broad categories, such as ''small plan issues'';

• Identified in the context of a type of transaction or industry practice; or

• An emerging concern or involving a legal position that is precedential in nature.

In addition a regional project should be amenable to the development of an effective targeting method so that an appropriate number of subjects can be identified for investigation. As noted previously, any number of targeting methods may be used.

Regional projects that satisfy these criteria provide a foundation for identifying cutting-edge issues that may be found to involve matters of national scope and importance. If subsequently selected as a national project, the experience and insight gained at the field office level will provide a substantive basis for guiding other field offices in conducting similar investigations. Some regional projects address practices that are more localized in their scope and impact. Because the demographics of each region differ in the concentrations of various types of plans and service providers, the same strategy is not optimal for all offices.

B. Criminal Investigations

Section 506(b) of ERISA gives the Department responsibility and authority to detect and investigate and refer, where appropriate, criminal violations related to Title I of ERISA and other federal laws, including the detection, investigation, and appropriate referrals of related violations of the federal criminal code. The number of criminal investigations and prosecutions pursued by PWBA has increased substantially in recent years and it is expected the number of cases and indictments will continue to grow. In particular, PWBA's role in investigating criminal violations involving health care plans is expected to grow with the recent addition of several new criminal provisions relating to health care plans.

[5] In December 1999, PWBA created the Office of Health Plan Standards and Compliance Assistance to develop regulations, interpretive bulletins, opinions, forms, and rulings relating to health care portability, non-discrimination requirements, and other related health provisions.

[6] In July 1998, PWBA released A Look at 401(k) Plan Fees, a 19-page educational booklet, to help consumers understand the fees and expenses associated with 401(k) plan accounts.

The prosecution of criminal acts relating to employee benefits plans is a critical part of PWBA's enforcement program. PWBA is committed to maintaining a strong criminal enforcement program by conducting criminal investigations to detect violations that affect employee benefit plans and to assist United States Attorneys and state prosecuting attorneys in their prosecution of such cases. Each of the PWBA field offices maintains on-going involvement in criminal investigative activity.

The U.S. Criminal Code includes several provisions that specifically address violations relating to ERISA-covered pension and health plans. The three major criminal provisions applicable to both pension and health plans are:

- Section 664, relating to theft or embezzlement from an employee benefit plan;
- Section 1027, relating to false statements and concealment of facts relating to documents required by ERISA; and
- Section 1954, relating to the offer, acceptance, or solicitation to influence operations of an employee benefit plan.

The federal criminal code contains several other provisions that have been applied in connection with criminal acts involving employee benefit plans, such as the mail and wire fraud provisions (sections 1341 and 1343) and money laundering prohibitions (sections 1956 and 1957).

HIPAA created four new federal crimes specifically relating to health care benefit programs. The four new provisions establish criminal penalties relating to general health care fraud (section 1347); theft or embezzlement relating to health care (section 669); false statements relating to health care (section 1035); and obstruction of criminal investigations of health care offenses (section 1518). HIPAA also amended the federal criminal code sections relating to money laundering and racketeering to address health care offenses. Amendments to the criminal asset forfeiture provisions now establish a process for restoring funds to ERISA-covered health plans.

Criminal cases are targeted in various ways, including systematic methods (such as the analysis of computer data), information obtained through a civil investigation, leads from individuals (such as plan participants, plan officials, or informants), media sources, or information obtained from other government agencies. The field offices are encouraged to maintain effective working relationships with other law enforcement agencies, such as the local U.S. Attorneys' offices, the Federal Bureau of Investigation and the Office of the Inspector General. PWBA maintains close contacts and coordinates with these and other federal and state law enforcement agencies both in connection with identifying potential investigative targets as well as in the course of conducting investigations and pursuing prosecution, when appropriate.

Once such leads have been identified and illegal conduct is indicated or suspected, the field office managers are responsible for determining whether an investigation should proceed criminally, civilly, or both simultaneously. Because the same facts giving rise to fiduciary violations in civil investigations may also give rise to criminal violations, as a matter of course, PWBA determines whether there are criminal issues to be pursued in connection with its civil investigations. If such issues are believed to potentially exist, a criminal investigation will be pursued and, as appropriate, the cases will be coordinated with the appropriate U.S. Attorneys' offices to seek indictments and convictions. Regardless of whether a criminal investigation has been formally opened, evidence obtained by PWBA indicating a potentially criminal act will be referred to the appropriate U.S. Attorney's office.

VI. Measurement of Program Results

The Government Performance and Results Act of 1993 (GPRA) requires the federal government to improve its performance and increase its results. Under GPRA, all federal agencies are required to develop multi-year strategic plans, prepare annual performance plans to implement the strategic plans, and provide annual reports that compare actual performance with stated goals. The StEP is designed to help achieve GPRA's mandates by structuring PWBA's general policies in a manner that will improve compliance results though the timely, efficient, and effective operation of its enforcement program.

GPRA requires the establishment of measurable goals against which performance can be evaluated. In the ERISA enforcement area the measurement of performance in terms of improved compliance is complicated by the absence of an established base level of non-compliance. With over 700,000 pension plans and four million welfare plans, no such baseline of compliance has been established. Like other enforcement and regulatory agencies, PWBA has struggled with this issue for some time. The establishment of pure baseline data regarding the incidence of violations remains a major obstacle. Therefore, PWBA has selected performance measures which highlight the most important activities of the enforcement program, measures that challenge the agency to improve the efficiency and effectiveness of its ongoing programs as well as to address new and important initiatives.

PWBA has made significant progress assembling baseline data for these performance measures which are included in the PWBA Strategic and Annual Performance Plans. For example, the agency has established baselines for measures such as the number of fiduciary investigations closed where plan assets are restored and where prohibited transactions have been corrected, closed investigations where plan assets have been protected from mismanagement and risk of future loss is reduced, and the ratio of closed civil cases with corrected violations to total civil cases closed.

The PWBA Strategic Plan for FY 1997–FY 2002 is located on PWBA's web site at www.dol.gov/dol/pwba/public/gpra/main.htm. For a hard copy, contact PWBA's Public Disclosure Room, at 202–219–8771.

Signed at Washington, D.C., this 3rd day of April, 2000.

Leslie B. Kramerich,

Acting Assistant Secretary, Pension and Welfare Benefits Administration.

[FR Doc. 00–8504 Filed 4–5–00; 8:45 am]

BILLING CODE 4510–29–P

Federal Register

Thursday,
April 6, 2000

Part IX

Department of Education

34 CFR Part 379
Projects With Industry; Final Rule

DEPARTMENT OF EDUCATION

34 CFR Part 379

RIN 1820–AB45

Projects With Industry

AGENCY: Office of Special Education and Rehabilitative Services, Education.

ACTION: Final regulations.

SUMMARY: The Secretary amends the regulations governing the Projects With Industry (PWI) program to clarify statutory intent and to enhance program accountability.

DATES: These regulations are effective May 8, 2000.

FOR FURTHER INFORMATION CONTACT: Thomas E. Finch, U.S. Department of Education, 400 Maryland Avenue, SW., room 3315, Mary E. Switzer Building, Washington, DC 20202–2575. Telephone: (202) 205–8292. If you use a telecommunications device for the deaf (TDD), you may call the Federal Information Relay Service (FIRS) at 1–800–877–8339.

Individuals with disabilities may obtain this document in an alternative format (*e.g.,* Braille, large print, audiotape, or computer diskette) on request to the contact person named in the preceding paragraph.

SUPPLEMENTARY INFORMATION: On January 22, 1996, we published a notice of proposed rulemaking (NPRM) for the PWI program in the **Federal Register** (61 FR 1672) inviting comments on changes needed to improve the PWI program's compliance indicators. We used the comments received in response to that NPRM, comments provided by participants in focus group meetings held by the Rehabilitation Services Administration (RSA), a June 1994 report on the PWI program prepared for the Department by the Research Triangle Institute, and RSA's analysis of grantee performance on the current PWI compliance indicators to develop revisions to the PWI compliance indicators.

On June 23, 1998, we published an NPRM for the PWI program in the **Federal Register** (63 FR 34218) proposing revisions to the PWI compliance indicators. On pages 34218 through 34221 of the June 23, 1998, NPRM, we discussed the major changes proposed in that document to improve project performance, enhance project accountability, better reflect statutory intent, and reduce grantee burden. These proposed changes included the following:

- Amending § 379.21(a)(4) to require an applicant to include in its application a description of the factors that justify the project's projected average cost per placement.
- Amending § 379.50 to eliminate the minimum composite scoring system for all proposed compliance indicators and replace it with minimum performance levels on all proposed compliance indicators. We also proposed the requirement that grantees attain at least the minimum performance level on each of the compliance indicators to be eligible for continuation funding.
- Amending § 379.51 and § 379.52 to eliminate both the performance ranges within each proposed compliance indicator and the minimum composite scoring system for all proposed compliance indicators. We proposed replacing these with the requirement that grantees attain at least the minimum performance level on each of the compliance indicators.
- Amending § 379.53 to replace the nine compliance indicators with five proposed compliance indicators.
- Amending § 379.54 to reflect the change from composite scoring to a pass/fail system.

In addition to the proposed changes, we also stated that we proposed to collect data from PWI projects on ''change in earnings'' and ''job retention'' for individuals who receive services. We stated our intention to use this data to determine the need for—(a) Any revision to the performance level for the ''Change in earnings'' compliance indicator or to the compliance indicator itself; and (b) developing a compliance indicator, and appropriate performance level to measure job retention for individuals who receive PWI services.

In response to public comment, we have made several changes in these final regulations from what was proposed in the June 23, 1998, NPRM. The final regulations—(1) Require that each grant application include a projected average cost per placement for the project (§ 379.21(c)); (2) require a project to pass the two ''primary'' compliance indicators and any two of the three ''secondary'' compliance indicators to receive a continuation award (§ 379.50); (3) designate two compliance indicators as ''primary'' and three compliance indicators as ''secondary'' (§ 379.51(b) and (c)); and (4) change the minimum performance levels for three of the compliance indicators (§ 379.53(a)(1)—Placement rate; § 379.53(a)(2)—Change in earnings; and § 379.53(b)(3)—Average cost per placement). A more detailed description of these and other changes to the regulations is contained in the ''Analysis of Comments and Changes'' section of this preamble.

Analysis of Comments and Changes

In response to our invitation in the June 23, 1998, NPRM, 108 parties submitted comments on the proposed regulations. Most commenters addressed more than one issue regarding the proposed regulations. We reviewed all comments and carefully considered these comments in the development of the final regulations. Major issues raised by the commenters are discussed under the section of the final regulations to which they pertain. We do not specifically discuss in this preamble: (1) The technical changes to the PWI regulations (published in the **Federal Register** on September 1, 1999 (64 FR 48052)) to implement the 1998 Amendments to the Rehabilitation Act of 1973 (1998 Amendments), which are in title IV of the Workforce Investment Act of 1998 (WIA), Pub. L. 105–220 (enacted August 7, 1998); (2) changes suggested by commenters but that the law does not authorize us to make under the applicable statutory authority; and (3) other minor changes. We also wish to point out that the technical changes we made to the PWI regulations to implement the 1998 Amendments included substantial changes to § 379.21 from what we proposed in the June 23, 1998, NPRM. In these final regulations, we made several additional changes to § 379.21 beyond the technical changes we made on September 1, 1999. However, only one of these additional changes, which we mentioned previously, was significant, and the others were very minor.

An analysis of the comments and the changes in the regulations since publication of the June 23, 1998, NPRM follows.

Section 379.21(a)(7)—Grant Application Must Include a Description of the Factors That Justify the Applicant's Projected Average Cost Per Placement

Comments: Four commenters supported the requirement in proposed § 379.21(a)(4) that an application include a justification of the project's proposed cost per placement.

Discussion: We have reviewed this section and wish to clarify that it is the project's projected *average* cost per placement that must be justified. This clarifying change makes the application requirement consistent with the actual compliance indicator, which refers to the project's ''actual *average* cost per placement.'' (Emphasis added.)

Changes: We have revised § 379.21(a)(7)(proposed § 379.21(a)(4)) by changing the word ''proposed'' to ''projected'' and adding the word ''average'' to the phrase ''proposed cost

per placement'' so that the regulations now read ''projected average cost per placement.''

Section 379.21(c)—Grant Application Must Include the Project's Projected Average Cost Per Placement

Comments: None.

Discussion: Since publication of the June 23, 1998, NPRM, we have reviewed this section and realized that the requirement to include in an application the projected average cost per placement was only implicit. The NPRM required that the grant application include a description of the justification of the project's proposed cost per placement. In addition, the NPRM proposed a minimum performance level not to exceed 110 percent of the projected average cost per placement in the grantee's application. Although this language implied that the grantee's application should include the projected average cost per placement so that the difference between the actual average cost per placement and the projected average cost per placement could be calculated, this requirement was not explicit anywhere in the NPRM. As a result, we believed the language in the final regulations needed to be clear and explicit that the applicant must include the projected average cost per placement in its application. In addition, we believe an applicant should understand that it must use the same method to calculate the projected average cost per placement that we have always used, which is to divide the sum of the total project costs (*i.e.,* Federal dollar amount of the grant plus the total non-Federal contributions) by the number of individuals the applicant projects in its application will be served by the project. This method is described in Instruction Number 8 of the ''Instructions for Completing the Reporting Form for Projects With Industry Compliance Indicators and Annual Evaluation Report'' that we mail to each recipient of a PWI grant.

Changes: We have added a new paragraph (c) to § 379.21 that explicitly requires the applicant to include in its application the projected average cost per placement for the proposed project, which must be calculated by dividing the sum of the total project costs (*i.e.,* Federal dollar amount of the grant plus the total non-Federal contributions) by the number of individuals the applicant projects in its application will be served by the project.

Section 379.50—Requirements for Continuation Funding

Comments: Fifteen commenters opposed the requirement that grantees meet minimum performance levels on all program compliance indicators to receive continuation funding. A majority of these commenters objected to the proposed requirement because they believed the composite scoring method allowed for more flexibility in how projects achieve their goals. Four of these commenters favored retaining the composite scoring method because it allowed a project that excelled in one or more areas to receive continuation funding even though it might be weak or unable to attain the minimum performance level in one or more other areas.

Discussion: We agree with the comments favoring more flexibility and have made changes to achieve a combination of flexibility and accountability. Under the former composite scoring method, a PWI project could receive zero points on as many as five of the nine compliance indicators and still receive continuation funding. Because this did not ensure the high level of performance and accountability we expected of all PWI projects, we proposed the changes published in the June 23, 1998, NPRM.

We have since reviewed available data to determine the effect on PWI projects if they had been required to meet all of the five proposed compliance indicators to receive continuation funding. The available data indicated that, although most projects could have met most of the minimum performance levels, a significant percentage of projects might not have met all five of the proposed compliance indicators. These projects would have failed to receive continuation funding under the system proposed in the June 23, 1998, NPRM. After reviewing the data, we believe the changes we have made combine the best features of the minimum performance level approach and the composite scoring method.

The changes we have made are based on the belief that placing individuals in competitive employment and increasing their earnings are the two most important purposes of the PWI program. The newly designated ''primary'' compliance indicators will measure how well a PWI project achieves these dual goals. We believe that if a project is unable to meet the minimum performance level for both of these two compliance indicators, it should not receive a continuation award.

We believe the newly designated ''secondary'' compliance indicators also are important for measuring the success of a PWI project. However, we do not believe that the failure to meet any one of the ''secondary'' compliance indicators should cause an otherwise successful project to lose its continuation funding. Therefore, we have determined that PWI projects must meet only two of the three ''secondary'' compliance indicators to receive continuation funding.

We believe that requiring PWI projects to meet only two of the three ''secondary'' compliance indicators provides the necessary flexibility to ensure that individuals without a significant disability and individuals who were unemployed for shorter periods also will have access to PWI services. Finally, this added flexibility will benefit projects—(1) Designed to excel in meeting one ''secondary'' compliance indicator (*e.g.,* projects serving a high percentage of individuals with significant disabilities) but which may have difficulty in meeting one or both of the other ''secondary'' indicators; and (2) projects facing a variety of economic and other factors that affect how much it costs to provide services to individuals.

Changes: We have revised § 379.50 to eliminate the proposed requirement that a project meet the minimum performance levels on all five compliance indicators to receive a continuation award. We also have divided the proposed five compliance indicators into ''primary'' and ''secondary'' compliance indicators. ''Placement rate'' and ''Change in earnings'' are ''primary'' indicators. ''Percent placed who have significant disabilities,'' ''Percent placed who were previously unemployed,'' and ''Cost per placement'' are ''secondary'' indicators. We have revised § 379.50 to require that a grantee meet the minimum performance levels of the two newly designated ''primary'' compliance indicators and any two of the three newly designated ''secondary'' compliance indicators to receive continuation funding. This last change makes proposed § 379.52(c) incorrect. Therefore, we have deleted § 379.52(c).

Comments: Four commenters believed that eliminating the composite scoring method (on which continuation funding was based) in the middle of a grant period is unfair to existing grantees.

Discussion: We are sensitive to the concerns of commenters that existing projects should not be unfairly penalized for grant proposals that were produced under the previous compliance indicators. We also recognize the need for a delay in the implementation of the indicators and the need to allow projects the opportunity to negotiate changes to their approved grant applications.

Changes: We have determined that implementation of the new compliance indicators should begin on October 1, 2000. We also will provide an existing project a one-time opportunity to negotiate, prior to July 1, 2000, reasonable changes to the content of its approved grant application, consistent with these regulations.

Section 379.51—What Are the Program Compliance Indicators?

Comments: One commenter recommended retaining two of the former compliance indicators (''Percent of persons served whose disabilities are significant'' and ''Percent of persons served who have been unemployed for at least 6 months at the time of project entry'') in addition to those we proposed.

Discussion: We believe that these two former compliance indicators identified by the commenters should no longer be used to measure a project's performance for the reasons given in the preamble to the June 23, 1998, NPRM. As we stated in that preamble, projects should be judged on the extent to which they are successful in assisting individuals to achieve competitive employment, including those with a significant disability and those who have been unemployed at least 6 months prior to project entry. We believe that discontinuing the use of these two compliance indicators places more focus on a project's actual success in placing individuals in competitive employment, better reflects the goals of the PWI program, and reduces grantee information collection and reporting burden.

Changes: None.

Comments: One commenter proposed a new compliance indicator to measure the active involvement of the Business Advisory Council (BAC) in the structure and operation of a PWI project.

Discussion: The 1998 Amendments strengthened the role of the BACs in PWI projects in the following ways: (1) The project's BAC must include a representative of the appropriate designated State unit. (2) The identification of job and career availability must be consistent with the current and projected local employment opportunities identified by the local workforce investment board for the community under section 118(b)(1)(B) of WIA. (3) The BAC has the option to prescribe either training programs or job placement programs in fields related to the job and career availability it has identified. We believe the most effective method of ensuring BAC involvement in a PWI project is to monitor the extent to which a BAC complies with the revised statutory requirements. The technical amendments to the PWI regulations, including those made to § 379.21(a)(1), are designed to ensure BAC compliance with those statutory requirements.

Change: None.

Section 379.52—How Is Grantee Performance Measured Using the Compliance Indicators?

Comments: All but one of the commenters who addressed this section of the regulations opposed the proposed requirement that a grantee pass all of the proposed compliance indicators to qualify for continuation funding. Some commenters believed that a pass/fail approach would penalize projects that are unable, due to the individual characteristics of the project or for reasons beyond the project's control, to meet one or more of the proposed compliance indicators. Some commenters expressed concern that an entire project could fail by experiencing a temporary deficiency in one area even though the project's performance and achievements are outstanding in all other areas.

Discussion: For the reasons stated in the discussion to § 379.50, we believe the previous composite scoring system that allowed a project to fail five of the nine compliance indicators and yet receive continuation funding was detrimental both to the PWI program and individuals served by the PWI program. We believe deficiencies that would make a project ineligible to receive continuation funding are adequately addressed through the provisions of § 379.54(c), which allow grantees to submit data from the first 6 months of the current budget period to demonstrate that a project's performance has improved sufficiently to meet the minimum performance level or levels.

Changes: None.

Section 379.53—What Are the Minimum Performance Levels for Each Compliance Indicator?

(a) Placement Rate

Comments: Eleven commenters addressed the proposed requirement that a minimum of 55 percent of individuals served by the project be placed into competitive employment. Three of these commenters supported the proposed compliance indicator, citing the importance of this indicator in determining whether the overall purpose of the PWI program is being met. Three commenters expressed concern that the 55 percent level of compliance was too high and would adversely affect projects serving large percentages of individuals with significant disabilities or other individuals who are more difficult to place in employment. Two commenters believed that the proposed compliance indicator failed to consider local economic conditions and changes in those conditions that are beyond the control of the project.

Discussion: As stated previously, we remain committed to implementing compliance indicators for the PWI program that ensure sufficiently high standards of performance and accountability in the use and expenditure of Federal funds. We realize that increasing the minimum performance on this indicator from 40 percent to 55 percent may cause some difficulty for some projects. Therefore, we have decided to phase in the new minimum performance level over a period of 5 years. The minimum performance level for this indicator will be 50 percent for fiscal year (FY) 2001, which is 5 percentage points lower than what we proposed in the NPRM. This minimum performance level will increase to 55 percent by FY 2005. We believe that starting at a lower minimum level than what we proposed and phasing in the higher minimum performance level for the placement rate is warranted to help ensure that otherwise effective projects do not fail this compliance indicator because they serve individuals with significant disabilities or because of the location of the project (*e.g.,* rural areas). The 5 years should be more than sufficient time to improve a project's performance, even for those projects that serve individuals with significant disabilities or that are in a location that makes it difficult to place individuals (*e.g.,* rural areas).

Changes: We have lowered the proposed minimum performance level for the ''Placement rate'' indicator in § 379.53(a)(1) from 55 percent to 50 percent for FY 2001. However, we have established a phased-in increase in the performance level as follows: 51 percent for FY 2002; 52 percent for FY 2003; 54 percent for FY 2004; and 55 percent for FY 2005.

(b) Change in Earnings

Comments: Sixty-six commenters expressed concern with the proposed ''Change in earnings'' indicator. Thirty-nine of the commenters, all from the State of Maine, were opposed to the proposed compliance indicator because they believe the $150 per week minimum increase in earnings for an individual placed by the project is unfair to projects operating in rural or poor States because the job market

consists mainly of small businesses that provide primarily part-time employment. In addition, 17 of the commenters felt that the proposed compliance indicator fails to consider those individuals seeking career advancement who may not achieve an increase in earnings of $150.00 per week. Nine of the commenters felt that the proposed performance level discourages individuals from considering part-time work. One of the commenters believed that the proposed threshold of 75 percent for projects serving individuals in supported employment and projects serving students working fewer than 30 hours per week in the ''Change in earnings'' indicator is too high.

Discussion: We agree that the proposed ''Change in earnings'' compliance indicator needs to be restructured. The proposed ''Change in earnings'' compliance indicator contained three categories of projects, each of which had different performance levels. These categories were projects in which at least 75 percent of individuals placed are placed into supported employment, projects in which 75 percent of individuals placed are students enrolled in secondary schools who work fewer than 30 hours per week, and all other projects. Under the proposed regulations, the performance level for projects in the first two categories (*i.e.,* supported employment and students) required an average increase in earnings of at least $100 per week. The proposed level for all other projects was $150 per week.

Because many other projects (*e.g.,* ''supported employment'' projects and those with secondary school students) may place a large percentage of persons who need or choose to obtain part-time employment, we believe combining the two proposed exceptions to this performance level in the final regulations will simplify this indicator. In addition, we believe lowering the proposed minimum level of increase in earnings will be more fair to projects operating in rural or poor States, make it easier for projects that serve individuals seeking career advancement, and eliminate any undue penalty to projects serving individuals who want to work part-time.

Changes: We have lowered the proposed minimum ''Change in earnings'' performance level in § 379.53(a)(2)(A) to $125 per week. In addition, we have combined the two proposed exceptions to this requirement into one exception now found in § 379.53(a)(2)(B). The ''Change in earnings'' indicator in the final regulations has two categories with different performance levels: (1) Projects in which at least 75 percent of individuals placed in competitive employment are working fewer than 30 hours per week (average increase in earnings of $100.00 per week). (2) All other projects (average increase in earnings of $125 per week). The revised compliance indicator requires that, if at least 75 percent of the individuals placed by a project work fewer than 30 hours per week, their minimum change in earnings must increase by an average of at least $100 per week over earnings at the time of project entry.

(c) Percent Placed Who Have Significant Disabilities

Comments: The two commenters who specifically addressed the proposed ''Percent placed who have significant disabilities'' compliance indicator suggested that we consider increasing the performance level for this indicator. One of these commenters felt that PWI projects should move toward serving higher percentages of individuals with significant disabilities, as is currently the practice in State vocational rehabilitation (VR) programs.

Discussion: We do not believe that the proposed performance level for the ''Percent placed who have significant disabilities'' compliance indicator should be modified at this time. Title I of the Rehabilitation Act requires a State VR agency to give priority to serving those individuals with the most significant disabilities if it cannot serve all eligible individuals. There is no similar requirement in the PWI program's authorizing language. Although we are committed to serving individuals with significant disabilities, we believe that flexibility is needed to ensure that persons who are not ''individuals with a significant disability'' also have access to PWI services.

We also intend to review on a periodic basis each project's performance relative to the minimum performance level for all compliance indicators. If warranted, we will adjust the performance level for this compliance indicator, as well as all other compliance indicators.

Changes: None.

(d) Percent Placed Who Were Previously Unemployed

Comments: Seven commenters addressed the proposed ''Percent placed who were previously unemployed'' indicator. Six of the commenters raised concerns that some projects may have difficulty meeting this compliance indicator because they serve a number of individuals who are already employed or who have performed temporary or seasonal work within 6 months prior to entering the program. One of these commenters expressed concern that the steady decrease in the percentage of previously unemployed individuals who have entered this commenter's project over the past 2 years makes it more difficult to achieve compliance with this indicator.

Discussion: We believe that the proposed performance level for this compliance indicator is already set at a level that will allow most projects to serve a considerable number of individuals who are already employed or who have performed temporary or seasonal work. In addition, available data show that a large majority of projects already exceed this compliance indicator by sizable margins. Therefore, we do not believe that the performance level for this compliance indicator requires modification.

Changes: None.

(e) Average Cost Per Placement

Comments: Fifty-seven commenters expressed concerns about the ''Average cost per placement'' indicator. Thirty-four of these commenters were concerned that the proposed requirement will have an adverse effect on existing projects, and they believed it would be unfair to change rules in the middle of a project period. These commenters also questioned whether projects would be allowed to renegotiate the estimated ''cost per placement.'' Twenty-one commenters believed that it would not be possible to predict, within a 10 percent margin of error, the projected ''average cost per placement'' 6 years into the future, as required at the time of application. Two commenters stated that, because the cost of services varies significantly from individual to individual, it is difficult to project costs in advance. Another commenter noted that the unemployment rate, which fluctuated from a low of 5.8 percent to a high of 9.0 percent over a recent 5-year grant period, had a significant impact on the cost per placement, and that no one could have predicted these fluctuations. Three commenters believed that projects will deny needed costly services to individuals with significant disabilities to avoid exceeding the projections and failing this compliance indicator.

Discussion: We agree with the commenters that the proposed performance level for this compliance indicator needed more flexibility and that the allowable difference between the projected and actual average cost per placement needed to be increased. We believe that allowing for a larger difference between the projected and

actual average cost per placement will provide for greater flexibility in the types of services PWI projects provide. The available data suggests that a substantially larger number of PWI projects will be able to meet the performance level for this compliance indicator if the allowable difference between the projected and actual average cost per placement is greater than what we had proposed.

We also intend to review on a periodic basis each project's performance relative to the minimum performance level on this compliance indicator. If warranted, we will adjust the performance level for this compliance indicator, as well as for any other compliance indicator.

Changes: We have raised the allowable change between projected and actual ''Average cost per placement'' in § 379.53(b)(3) from 110 percent to 115 percent.

Goals 2000: Educate America Act

The Goals 2000: Educate America Act (Goals 2000) focuses the Nation's education reform efforts on the eight National Education Goals and provides a framework for meeting them. Goals 2000 promotes new partnerships to strengthen schools and expands the Department's capacities for helping communities to exchange ideas and obtain information needed to achieve the goals.

These regulations address the National Education Goal that every adult American will possess the knowledge and skills necessary to compete in a global economy and exercise the rights and responsibilities of citizenship. The regulations further the objectives of this Goal by implementing a program that affords individuals with disabilities opportunities for job training, job placement, placement in competitive employment, and career advancement.

Executive Order 12866

We have reviewed these final regulations in accordance with Executive Order 12866. Under the terms of the order, we have assessed the potential costs and benefits of this regulatory action.

The potential costs associated with the final regulations are those costs resulting from statutory requirements and those costs we have determined to be necessary for administering this program effectively and efficiently.

In assessing the potential costs and benefits (both quantitative and qualitative) of these final regulations, we have determined that the benefits of the final regulations justify the costs.

We also have determined that this regulatory action does not unduly interfere with State, local, and tribal governments in the exercise of their governmental functions.

Summary of Potential Costs and Benefits

We summarized the potential costs and benefits of these final regulations in the preamble to the June 23, 1998, NPRM under the heading ''Summary of potential costs and benefits.'' (63 FR 34218, 34221) We include additional discussion of potential costs and benefits in the section of this preamble titled ''Analysis of Comments and Changes.''

Paperwork Reduction Act of 1995

The Paperwork Reduction Act of 1995 does not require you to respond to a collection of information unless it displays a valid Office of Management and Budget (OMB) control number. We display the valid OMB control number assigned to the collection of information in these final regulations at the end of the affected sections of the regulations.

Intergovernmental Review

This program is subject to the requirements of Executive Order 12372 and the regulations in 34 CFR part 79. The objective of the Executive order is to foster an intergovernmental partnership and a strengthened federalism by relying on processes developed by State and local governments for coordination and review of proposed Federal financial assistance. The order and the regulations in 34 CFR part 79 do not apply to federally recognized Indian tribes or tribal organizations.

In accordance with the order, we intend this document to provide early notification of the Department's specific plans and actions for this program.

Assessment of Educational Impact

In the June 23, 1998, NPRM, we requested comments on whether the proposed regulations would require transmission of information that any other agency or authority of the United States gathers or makes available. Based on the response to the June 23, 1998, NPRM and on our review, we have determined that these final regulations do not require transmission of information that any other agency or authority of the United States gathers or makes available.

Electronic Access to This Document

You may view this document, as well as all other Department of Education documents published in the **Federal Register**, in text or Adobe Portable Document Format (PDF) on the Internet at either of the following sites:

http://ocfo.ed.gov/fedreg.htm
http://www.ed.gov/news.html

To use the PDF you must have the Adobe Acrobat Reader Program with Search, which is available free at either of the previous sites. If you have questions about using the PDF, call the U.S. Government Printing Office (GPO), toll free, at 1–888–293–6498; or, in the Washington, DC, area at (202) 512–1530.

Note: The official version of this document is the document published in the **Federal Register**. Free Internet access to the official edition of the **Federal Register** and the Code of Federal Regulations is available on GPO Access at: http://www.access.gpo.gov/nara/index.html.

(Catalog of Federal Domestic Assistance Number 84.234 Projects With Industry)

List of Subjects in 34 CFR Part 379

Education, Grant programs—education, Grant programs—social programs, Reporting and recordkeeping requirements, Vocational rehabilitation.

Dated: January 27, 2000.

Judith E. Heumann,

Assistant Secretary for Special Education and Rehabilitative Services.

For the reasons discussed in the preamble, the Secretary amends part 379 of title 34 of the Code of Federal Regulations as follows:

PART 379—PROJECTS WITH INDUSTRY

1. The authority citation for part 379 continues to read as follows:

Authority: Sections 12(c) and 621 of the Act; 29 U.S.C. 711(c) and 795(g), unless otherwise noted.

2. Section 379.21 is revised to read as follows:

§ 379.21 What is the content of an application for an award?

(a) The grant application must include a description of—

(1) The responsibilities and membership of the BAC, consistent with section 611(a)(2)(A) of the Act, and how it will interact with the project in carrying out grant activities, including how the BAC will—

(i) Identify job and career availability within the community, consistent with the current and projected local employment opportunities identified by the local workforce investment board for the community under section 118(b)(1)(B) of the Workforce Investment Act of 1998;

(ii) Identify the skills necessary to perform the jobs and careers identified; and

(iii) For individuals with disabilities in fields related to the job and career availability identified under paragraph (a)(1)(i) of this section, prescribe either—

(A) Training programs designed to develop appropriate job and career skills; or

(B) Job placement programs designed to identify and develop job placement and career advancement opportunities;

(2) How the project will provide job development, job placement, and career advancement services to project participants;

(3) To the extent appropriate, how the project will provide for—

(i) Training in realistic work settings to prepare individuals with disabilities for employment and career advancement in the competitive market; and

(ii) To the extent practicable, the modification of any facilities or equipment of the employer involved that are used primarily by individuals with disabilities, except that a project will not be required to provide for that modification if the modification is required as a reasonable accommodation under the Americans with Disabilities Act of 1990;

(4) How the project will provide individuals with disabilities with support services that may be required to maintain the employment and career advancement for which the individuals have received training under this part;

(5) How the project will involve private industry in the design of the proposed project and the manner in which the project will collaborate with private industry in planning, implementing, and evaluating job development, job placement, career advancement activities, and, to the extent included as part of the activities to be carried out by the project, job training activities;

(6) A plan to annually conduct a review and evaluation of the operation of the proposed project in accordance with the program compliance indicators and evaluation standards in Subpart F of this part and, in conducting the review and evaluation, to collect data and information of the type described in subparagraphs (A) through (C) of section 101(a)(10) of the Act, as determined to be appropriate by the Secretary;

(7) The factors that justify the applicant's projected average cost per placement, including factors such as the project's objectives, types of services, target population, and service area, and how these factors affect the projection;

(8) The geographic area to be served by the project, including an explanation of how the area is currently unserved or underserved by the PWI program; and

(9) How the project will address the needs of individuals with disabilities from minority backgrounds, as required by section 21(c) of the Act.

(b) The grant application also must include assurances from the applicant that—

(1) The project will carry out all activities required in § 379.10;

(2) Individuals with disabilities who are placed by the project will receive compensation at or above the minimum wage, but not less than the customary or usual wage paid by the employer for the same or similar work performed by individuals who are not disabled;

(3) Individuals with disabilities who are placed by the project will—

(i) Be given terms and benefits of employment equal to terms and benefits that are given to similarly situated nondisabled co-workers; and

(ii) Not be segregated from their co-workers;

(4) The project will maintain any records required by the Secretary and make those records available for monitoring and audit purposes;

(5) The project will provide to the Secretary an annual evaluation report of project operations as required in § 379.21(a)(6) and will submit reports in the form and detail and at the time required by the Secretary; and

(6) The applicant will comply with any requirements necessary to ensure the correctness and verification of those reports.

(c) The grant application also must include the projected average cost per placement for the project, which must be calculated by dividing the sum of the total project costs (*i.e.,* Federal dollar amount of the grant plus the total non-Federal contributions) by the number of individuals the applicant projects in its application will be served by the project.

(Approved by the Office of Management and Budget under control number 1820–0631)
(Authority: Section 611 of the Act; 29 U.S.C. 795)

3. Subpart F of part 379 is revised to read as follows:

Subpart F—What Compliance Indicator Requirements Must a Grantee Meet To Receive Continuation Funding?

379.50 What are the requirements for continuation funding?
379.51 What are the program compliance indicators?
379.52 How is grantee performance measured using the compliance indicators?
379.53 What are the minimum performance levels for each compliance indicator?
379.54 What are the reporting requirements for the compliance indicators?

Subpart F—What Compliance Indicator Requirements Must a Grantee Meet To Receive Continuation Funding?

§ 379.50 What are the requirements for continuation funding?

To receive a continuation award for the third or subsequent year of the PWI grant, a grantee must—

(a) Adhere to the provisions of its approved application; and

(b) Meet the minimum performance levels on—

(1) The two ''primary'' program compliance indicators identified in § 379.51(b) and described in § 379.53(a); and

(2) Any two of the three ''secondary'' compliance indicators identified in § 379.51(c) and described in § 379.53(b).

(Authority: Section 611(f)(4) of the Act; 29 U.S.C. 795(f)(4))

§ 379.51 What are the program compliance indicators?

(a) *General.* The program compliance indicators implement program evaluation standards, which are contained in an appendix to this part, by establishing minimum performance levels in essential project areas to measure the effectiveness of individual grantees.

(b) *Primary compliance indicators.* ''Placement rate'' and ''Change in earnings'' are ''primary'' compliance indicators.

(c) *Secondary compliance indicators.* ''Percent placed who have significant disabilities,'' ''Percent placed who were previously unemployed,'' and ''Average cost per placement'' are ''secondary'' compliance indicators.

(Authority: Sections 611(d)(1) and 611(f)(1) of the Act; 29 U.S.C. 795(d)(1) and 795(f)(1))

§ 379.52 How is grantee performance measured using the compliance indicators?

(a) Each compliance indicator establishes a minimum performance level.

(b) If a grantee does not achieve the minimum performance level for a compliance indicator, the grantee does not pass the compliance indicator.

(Authority: Section 611(f)(1) of the Act; 26 U.S.C. 795(f)(1))

§ 379.53 What are the minimum performance levels for each compliance indicator?

(a) *Primary compliance indicators.*

(1) *Placement rate.* The project places individuals it serves into competitive employment as follows:

(i) No less than 50 percent during fiscal year (FY) 2001.

(ii) No less than 51 percent during FY 2002.

(iii) No less than 52 percent during FY 2003.

(iv) No less than 54 percent during FY 2004.

(v) No less than 55 percent during FY 2005 and any year thereafter.

(2) *Change in earnings.* (i) Except as provided in paragraph (a)(2)(ii) of this section, the average earnings of all individuals who are placed into competitive employment by the project increase by an average of at least $125.00 a week over the average earnings of all individuals at the time of project entry.

(ii) For projects in which at least 75 percent of individuals placed into competitive employment are working fewer than 30 hours per week, the average earnings of all individuals placed by the project increase by an average of at least $100.00 a week over the average earnings of all individuals at the time of project entry.

(b) *Secondary compliance indicators.*

(1) *Percent placed who have significant disabilities.* At least 50 percent of individuals who are placed into competitive employment are individuals with significant disabilities.

(2) *Percent placed who were previously unemployed.* At least 50 percent of individuals who are placed into competitive employment are individuals who were continuously unemployed for at least 6 months at the time of project entry.

(3) *Average cost per placement.* The actual average cost per placement does not exceed 115 percent of the projected average cost per placement in the grantee's application.

(Authority: Section 611(f)(1) of the Act; 29 U.S.C. 795(f)(1))

§ 379.54 What are the reporting requirements for the compliance indicators?

(a) To receive continuation funding for the third or any subsequent year of a PWI grant, each grantee must submit to the Secretary data for the most recent complete budget period no later than 60 days after the end of that budget period, unless the Secretary authorizes a later submission date. The Secretary uses this data to determine if the grantee has met the program compliance indicators in this subpart F.

(b) A grantee may receive its second year of funding (or the first continuation award) under this program before data from the first complete budget period is available. However, to allow the Secretary to determine whether the grantee is eligible for the third year of funding (or the second continuation award), the grantee must submit data from the first budget period in accordance with paragraph (a) of this section.

(c) If the data for the most recent complete budget period provided under paragraph (a) or (b) of this section show that a grantee has failed to achieve the minimum performance levels, as required by § 379.50(b), the grantee may, at its option, submit data from the first 6 months of the current budget period. The grantee must submit this data no later than 60 days after the end of that 6-month period, unless the Secretary authorizes a later submission date. The data must demonstrate that the grantee's project performance has improved sufficiently to meet the minimum performance levels required in § 379.50(b).

(Approved by the Office of Management and Budget under control number 1820–0631)

(Authority: Section 611(f)(2) and 611(f)(4) of the Act; 29 U.S.C. 795(f)(2) and 795(f)(4))

[FR Doc. 00–8523 Filed 4–5–00; 8:45 am]

BILLING CODE 4000–01–P

Reader Aids

Federal Register

Vol. 65, No. 67

Thursday, April 6, 2000

CUSTOMER SERVICE AND INFORMATION

Federal Register/Code of Federal Regulations

General Information, indexes and other finding aids	**202–523–5227**
Laws	**523–5227**
Presidential Documents	
Executive orders and proclamations	**523–5227**
The United States Government Manual	**523–5227**
Other Services	
Electronic and on-line services (voice)	**523–4534**
Privacy Act Compilation	**523–3187**
Public Laws Update Service (numbers, dates, etc.)	**523–6641**
TTY for the deaf-and-hard-of-hearing	**523–5229**

ELECTRONIC RESEARCH

World Wide Web

Full text of the daily Federal Register, CFR and other publications:

http://www.access.gpo.gov/nara

Federal Register information and research tools, including Public Inspection List, indexes, and links to GPO Access:

http://www.nara.gov/fedreg

E-mail

PENS (Public Law Electronic Notification Service) is an E-mail service for notification of recently enacted Public Laws. To subscribe, send E-mail to

listserv@www.gsa.gov

with the text message:

subscribe PUBLAWS-L your name

Use listserv@www.gsa.gov only to subscribe or unsubscribe to PENS. We cannot respond to specific inquiries.

Reference questions. Send questions and comments about the Federal Register system to:

info@fedreg.nara.gov

The Federal Register staff cannot interpret specific documents or regulations.

FEDERAL REGISTER PAGES AND DATE, APRIL

17435–17582 3
17583–17754 4
17755–17986 5
17987–18220 6

CFR PARTS AFFECTED DURING APRIL

At the end of each month, the Office of the Federal Register publishes separately a List of CFR Sections Affected (LSA), which lists parts and sections affected by documents published since the revision date of each title.

3 CFR

Proclamations:
7283 17552
7284 17981
7285 17983
7286 17985

5 CFR

532 17755

7 CFR

985 17756
Proposed Rules:
28 17609
984 17809
1218 17612

9 CFR

201 17758
Proposed Rules:
93 17455

10 CFR

72 17552
Proposed Rules:
71 18010
73 18010

12 CFR

951 17435
997 17435
Proposed Rules:
560 17811
915 17458

13 CFR

120 17439

14 CFR

39 ..... 17583, 17586, 17763, 17987
71 ..... 17588, 17589
91 17736
93 17736
97 ..... 17990, 17991
121 17736
135 17736
Proposed Rules:
23 17613
39 ..... 17471, 17818, 17822, 17824, 17827, 18010
71 17616

16 CFR

305 17554

19 CFR

Proposed Rules:
134 17473

20 CFR

404 17994
416 17994

21 CFR

1301 17552
1308 ..... 17440, 17552
Proposed Rules:
111 17474

24 CFR

200 17974

26 CFR

Proposed Rules:
1 ..... 17829, 17835
20 17835
25 17835
301 17617

27 CFR

Proposed Rules:
4 17839
275 17477

31 CFR

Ch. 5 17590

32 CFR

581 17440

33 CFR

117 ..... 17443, 17766

34 CFR

379 18214
674 18001

37 CFR

Proposed Rules:
1 ..... 17946, 18154
5 17946
201 17840

38 CFR

21 18151
Proposed Rules:
21 17477

39 CFR

111 ..... 17593, 17766

40 CFR

52 ..... 17444, 17768, 17771, 18003, 18008, 18009
180 17773
Proposed Rules:
52 ..... 17841, 18014
141 17842
142 17842
258 18014
761 18018

47 CFR

22 17445

27 17594
73.....17607, 17775
101.....17445
Proposed Rules:
73 .....17617, 17618, 17619

48 CFR

Proposed Rules:
15.....17582

49 CFR

533.....17776
Proposed Rules:
195.....18020
571.....17842
1180.....18021

50 CFR

17.....17779
226.....17786
300.....17805
600.....17805
660.....17805, 17807
679.....17808
Proposed Rules:
17.....18026
223.....17852
679.....18028

REMINDERS

The items in this list were editorially compiled as an aid to Federal Register users. Inclusion or exclusion from this list has no legal significance.

RULES GOING INTO EFFECT APRIL 6, 2000

ENVIRONMENTAL PROTECTION AGENCY

Air pollution control; new motor vehicles and engines:

Light-duty vehicles and trucks—

Heavy-duty engines for original equipment manufacturers and for aftermarket conversion manufacturers; published 3-7-00

SOCIAL SECURITY ADMINISTRATION

Social security benefits and supplemental security income:

Federal old age, survivors and disability insurance, and aged, blind, and disabled—

Medical opinion evidence evaluation; published 3-7-00

TRANSPORTATION DEPARTMENT

Federal Aviation Administration

Airmen certification:

Aircraft dispatchers; eligibility and certification requirements; published 12-8-99

COMMENTS DUE NEXT WEEK

AGRICULTURE DEPARTMENT

Agricultural Marketing Service

Plant variety protection office:

Fees revision; comments due by 4-14-00; published 3-15-00

Raisins produced from grapes grown in—

California; comments due by 4-10-00; published 2-9-00

AGRICULTURE DEPARTMENT

Animal and Plant Health Inspection Service

Exportation and importation of animals and animal products:

Poultry products from Mexico transiting U.S.; comments due by 4-10-00; published 2-8-00

AGRICULTURE DEPARTMENT

Food Safety and Inspection Service

Meetings:

E. coli in beef products; risk assessment; policy and regulatory changes; comments due by 4-11-00; published 2-11-00

AGRICULTURE DEPARTMENT

Rural Utilities Service

Electric loans:

Minimum Times Interest Earned Ratio (TIER) requirements; reduction; comments due by 4-10-00; published 3-10-00

COMMERCE DEPARTMENT

National Oceanic and Atmospheric Administration

Endangered and threatened species:

Gulf of Maine; Atlantic salmon; comments due by 4-14-00; published 3-15-00

Marine and anadromous species—

West coast steelhead in California et al.; comments due by 4-11-00; published 2-11-00

DEFENSE DEPARTMENT

Acquisition regulations:

Contract drawings, maps, and specifications; comments due by 4-10-00; published 2-10-00

Mentor-protege program improvements; comments due by 4-10-00; published 2-10-00

ENERGY DEPARTMENT

Defense nuclear facilities; disposal of real property for economic development; comments due by 4-14-00; published 2-29-00

ENERGY DEPARTMENT

Federal Energy Regulatory Commission

Practice and procedure:

Well category determinations; comments due by 4-10-00; published 2-8-00

ENVIRONMENTAL PROTECTION AGENCY

Air quality implementation plans; approval and promulgation; various States:

California; comments due by 4-10-00; published 3-9-00

Connecticut and Rhode Island; comments due by 4-10-00; published 3-9-00

Delaware; comments due by 4-10-00; published 3-9-00

Georgia; comments due by 4-12-00; published 3-13-00

Kentucky; comments due by 4-10-00; published 3-10-00

FEDERAL COMMUNICATIONS COMMISSION

Practice and procedure:

Communication between applicants in spectrum auctions; comments due by 4-10-00; published 2-8-00

Radio stations; table of assignments:

Florida; comments due by 4-10-00; published 3-3-00

Texas; comments due by 4-10-00; published 3-3-00

FEDERAL EMERGENCY MANAGEMENT AGENCY

Disaster assistance:

Hurricane Floyd property acquisition and relocation grants; comments due by 4-11-00; published 2-11-00

Public assistance program administration—

Insurance requirements; comments due by 4-10-00; published 2-23-00

FEDERAL HOUSING FINANCE BOARD

Federal home loan bank system:

Membership regulations; comments due by 4-14-00; published 3-15-00

HEALTH AND HUMAN SERVICES DEPARTMENT

Food and Drug Administration

Medical devices:

American Society for Testing and Materials; amendments to reflect current citations; comments due by 4-10-00; published 1-24-00

HOUSING AND URBAN DEVELOPMENT DEPARTMENT

Federal Housing Enterprise Oversight Office

Equal Access to Justice Act; implementation; comments due by 4-14-00; published 2-14-00

Risk-based capital:

Stress test; House Price Index (HPI) use and benchmark credit loss experience determination; comments due by 4-14-00; published 3-13-00

INTERIOR DEPARTMENT

Land Management Bureau

Land resource management:

Disposition; occupancy and use—

Alaska occupany and use; Alaska Native veterans allotments; comments due by 4-10-00; published 2-8-00

INTERIOR DEPARTMENT

Fish and Wildlife Service

Endangered and threatened species:

Gulf of Maine; Atlantic salmon; comments due by 4-14-00; published 3-15-00

Ohlone tiger beetle; comments due by 4-11-00; published 2-11-00

Showy stickseed; comments due by 4-14-00; published 2-14-00

INTERIOR DEPARTMENT

Surface Mining Reclamation and Enforcement Office

Permanent program and abandoned mine land reclamation plan submissions:

Indiana; comments due by 4-10-00; published 3-9-00

LIBRARY OF CONGRESS

Copyright Office, Library of Congress

Cable compulsory licese:

Network station definition; comments due by 4-11-00; published 2-11-00

NORTHEAST INTERSTATE LOW-LEVEL RADIOACTIVE WASTE COMMISSION

Party to Compact; State eligibility declaration; comments due by 4-13-00; published 3-14-00

POSTAL SERVICE

Domestic Mail Manual:

Commercial mail receiving agency; mail delivery; comments due by 4-12-00; published 3-13-00

Sacking and palletizing periodicals nonletters and standard mail (A) flats, traying first-class flats, and labeling pallets; comments due by 4-14-00; published 2-29-00

Practice and procedure:

False representation and lottery orders; proceedings; subpoenas and civil penalties; comments due by 4-13-00; published 3-14-00

SMALL BUSINESS ADMINISTRATION

Small business size standards:

8(a) business development/ small disadvantaged business status determinations; comments due by 4-10-00; published 3-10-00

SOCIAL SECURITY ADMINISTRATION

Social security benefits:

Federal old age, survivors, and disability insurance—

Medical criteria for disability determinations; comments due by 4-11-00; published 2-11-00

STATE DEPARTMENT

Consular services; fee schedule; comments due by 4-12-00; published 3-13-00

TRANSPORTATION DEPARTMENT

Coast Guard

Regattas and marine parades, anchorage regulations, and ports and waterways safety:

OPSAIL 2000, Hampton Roads, VA; regulated areas; comments due by 4-14-00; published 2-29-00

TRANSPORTATION DEPARTMENT

Federal Aviation Administration

Airworthiness directives:

Ayres Corp.; comments due by 4-10-00; published 2-16-00

Eurocopter Deutschland GmbH; comments due by 4-11-00; published 2-11-00

Eurocopter France; comments due by 4-11-00; published 2-11-00

Fairchild; comments due by 4-10-00; published 2-16-00

Fokker; comments due by 4-14-00; published 3-15-00

Saab; comments due by 4-14-00; published 3-15-00

Airworthiness standards:

Special conditions—

Boeing Model 727-200 and 727-200F series airplanes; comments due by 4-13-00; published 3-14-00

Raytheon Aircraft Co. Model 4000 airplane; comments due by 4-13-00; published 3-14-00

Class D and Class E airspace; comments due by 4-14-00; published 2-29-00

Class E airspace; comments due by 4-10-00; published 2-24-00

TRANSPORTATION DEPARTMENT

Federal Highway Administration

Engineering and traffic operations:

Utilities; comments due by 4-10-00; published 2-9-00

TREASURY DEPARTMENT

Customs Service

Customs bonds:

Articles subject to exclusion orders issued by International Trade Commission; bond procedures; comments due by 4-10-00; published 2-8-00

TREASURY DEPARTMENT

Internal Revenue Service

Income taxes:

Partnership debt allocation; comments due by 4-12-00; published 1-13-00

Partnership mergers and divisions; hearing; comments due by 4-10-00; published 1-11-00